APPENDIX C-2

# TOWER MAPPING REPORT

**MARCH 28, 2023**

**SITE NAME: WMAW ROSE HILL**
**ASR NUMBER: 1041037**
**TEP#: 327679.814193**

**2315 COUNTY ROAD 20**
**LOUIN, MS 39338**
**(JASPER COUNTY)**

**PREPARED FOR:**

## Mississippi Authority for Educational Television

326 Tryon Road, Raleigh, NC 27603 o) 919.661.6351 f) 919.661.6350
www.tepgroup.net

TOWER ENGINEERING PROFESSIONALS

**TOWER MAPPING**

Site Name WMAW ROSE HILL
TEP # 327679.814193
ASR # 1041037
Field Work Date 02/28/2023
Report Date 3/28/2023
Page 2 of 64

## CHECKLIST

| Page Title | Initials | Page # (s) | Revision | Notes |
|---|---|---|---|---|
| **Checklist & Notes** | JoRM | 2 | 0 | |
| **Tower Elevation** | JoRM | 3-4 | 0 | |
| **Tower Section Elevation** | JoRM | 5-33 | 0 | |
| **Anchor Head Details** | JoRM | 34-37 | 0 | |
| **Transmission Cables** | JoRM | 38-39 | 0 | |
| **Ladder Details** | JoRM | 40 | 0 | |
| **Antenna and Mount Sketch** | JoRM | 41-61 | 0 | |
| **Photos** | JoRM | 62-64 | 0 | |

## NOTES

| | | | |
|---|---|---|---|
| **Latitude:** | 32°08'19.13" | **Longitude:** | 89°05'37.15" |
| **Ground Elevation:** | 625'± | | |
| **Site Address:** | 2315 COUNTY ROAD 20, LOUIN, MS 39338 (JASPER COUNTY) | | |
| **ASR #:** | 1041037 | | |
| **Tower ID Plate:** | N/A | | |
| **Existing Carriers/Site #:** | N/A | | |
| | | | |
| | | | |
| | | | |
| **Gate Combo:** | 6557 | | |
| **Special Access Issues:** | N/A | | |

**Crew Leader:** LUKE MEADOWS, P.E.
**Crew Member:** CLINT OESTREICH, C.W.I.

| **Abbreviations:** | | | | | | |
|---|---|---|---|---|---|---|
| | **AGL:** | **Above Ground Level** | **L:** | **Angle** | **S.B.:** | **Stitch Bolts** |
| | **B.C.:** | **Bolt Circle** | **LLH:** | **Long Leg Horizontal** | **Schl:** | **Schifflerized Angle** |
| | **BP:** | **Bent Plate** | **LLV:** | **Long Leg Vertical** | **SM:** | **Smooth Heliax** |
| | **C-C:** | **Center to Center** | **2L:** | **Double Angle** | **SP:** | **Spacing** |
| | **C:** | **Channel** | **M.C.:** | **Metal Conduit** | **SR:** | **Solid Rod** |
| | **CNR:** | **Could Not Record** | **M.E.:** | **Minimum Edge** | **Th:** | **Thickness** |
| | **EW:** | **Elliptical Waveguide** | **MOD:** | **Modification** | **T.R.:** | **Threaded Rod** |
| | **FH:** | **Foam Heliax** | **PL:** | **Plate** | **TME:** | **Tower Mounted Equip.** |
| | **HSS:** | **Hollow Struct. Section** | **RC:** | **Rigid Conduit** | **Tri:** | **Triangular** |

**TOWER MAPPING**

Site Name WMAW ROSE HILL
TEP # 327679.814193
ASR # 1041037
Field Work Date 02/28/2023
Report Date 3/28/2023
Page 3 of 64

## TOWER ELEVATION

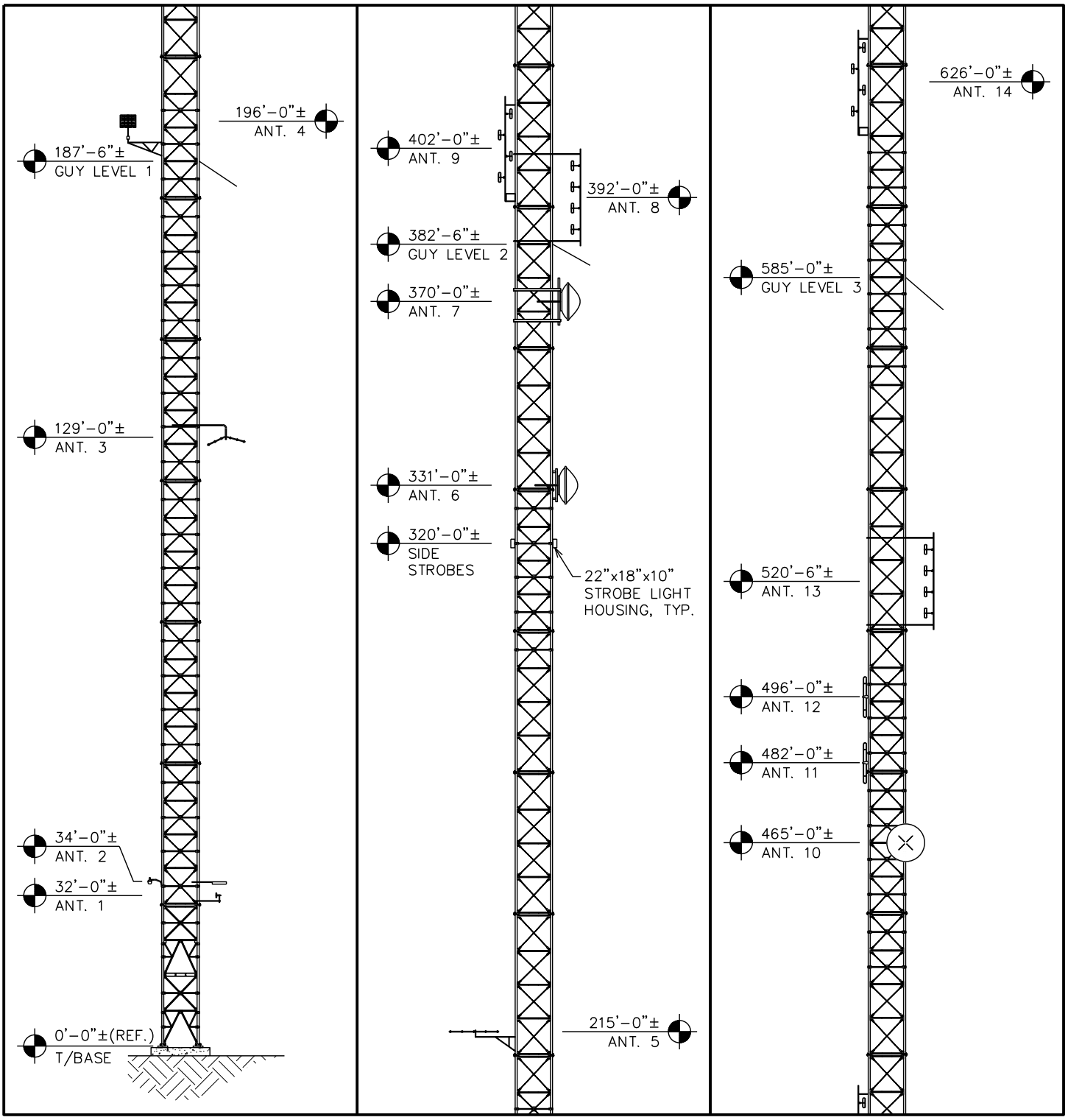

**TOWER MAPPING**

Site Name WMAW ROSE HILL
TEP # 327679.814193
ASR # 1041037
Field Work Date 02/28/2023
Report Date 3/28/2023
Page 4 of 64

## TOWER ELEVATION

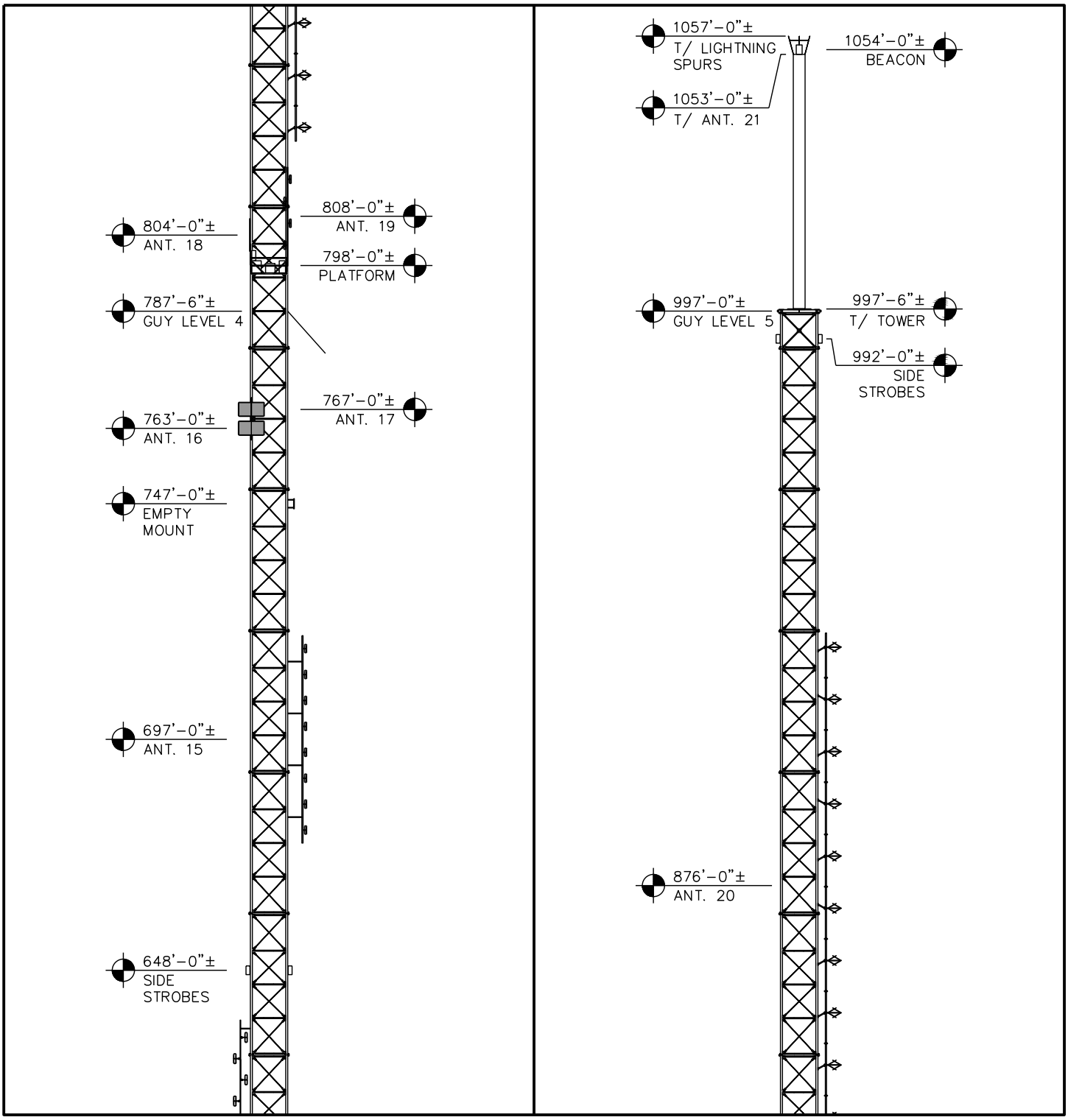

**TOWER MAPPING**

Site Name WMAW ROSE HILL
TEP # 327679.814193
ASR # 1041037
Field Work Date 02/28/2023
Report Date 3/28/2023
Page 5 of 64

**Face Width at Top** 7'-6"
**Face Width at Bottom** 7'-6"

## TOWER SECTION ELEVATION

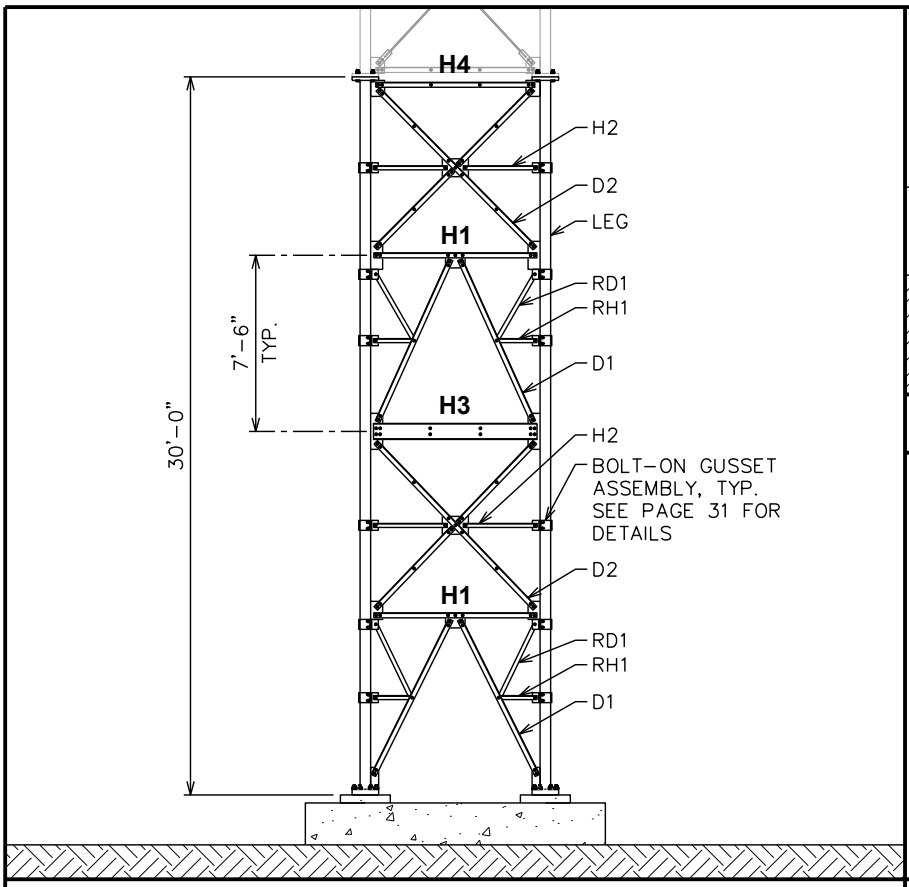


**SECTION 1 (0'-0" - 30'-0")**

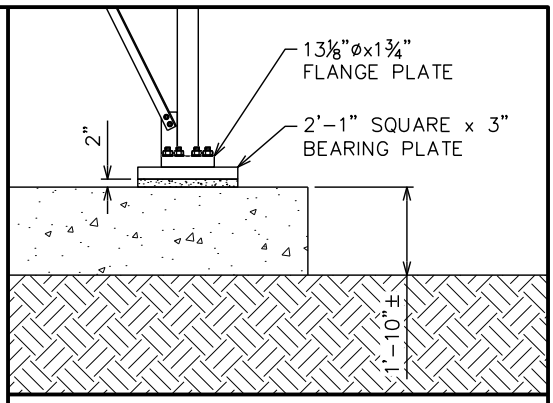


**BASE ELEVATION**

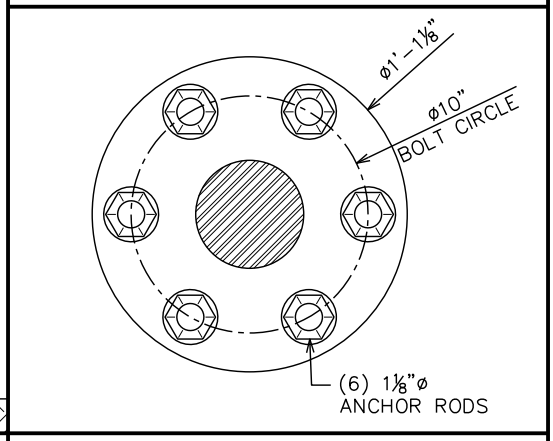


**BASE PLAN**

| Member | Size | Bolts | Stitch Bolt | Gussets/Flange |
|---|---|---|---|---|
| LEG | 5"Ø SOLID ROD | (6) 1⅛"Ø BOLTS | -- | 1¾" THICK |
| D1 | 2L2½x2x¼" | (2) ⅝"Ø BOLTS, 1⅛" ME 1¼" GAGE, 2" SPACING | - | ⅜" THICK, 1⅛" ME |
| D2 | 2L2x2x3/16" | (2) ⅝"Ø BOLTS, 1⅛" ME 1⅛" GAGE, 2" SPACING | (2) ⅝"Ø | ⅜" THICK, 1⅛" ME |
| H1 | 2L2½x2x3/16" | (2) ⅝"Ø BOLTS, 1⅛" ME, 1⅛" GAGE, 2¼" SP. | -- | ⅜" THICK |
| H2 | L2½x2½x3/16" | (1) ⅝"Ø BOLT, 1⅛" ME, 1⅜" GAGE | -- | ¼" THICK |
| H3 | 2C8x11.5 | (4) ⅝"Ø, 1⅛" ME 2½" SPACING | (2) ⅝"Ø AT ⅓ POINTS | ⅜" THICK |
| H4 | 2L2x2x3/16" | (2) ⅝"Ø BOLTS, 1⅛" ME 1⅛" GAGE, 2" SPACING | (2) ⅝"Ø | ⅜" THICK |
| RD1 | L2½x2x3/16" w/ 6" COPE LENGTH | (1) ⅝"Ø BOLT, 1⅛" ME, 1⅜" GAGE | -- | ¼" THICK |
| RH1 | L2½x2x3/16" w/ 4" COPE LENGTH | (1) ⅝"Ø BOLT, 1⅛" ME, 1⅜" GAGE | -- | ¼" THICK |

**TOWER MAPPING**

Site Name WMAW ROSE HILL
TEP # 327679.814193
ASR # 1041037
Field Work Date 02/28/2023
Report Date 3/28/2023
Page 6 of 64

**Face Width at Top** 7'-6"
**Face Width at Bottom** 7'-6"

## TOWER SECTION ELEVATION

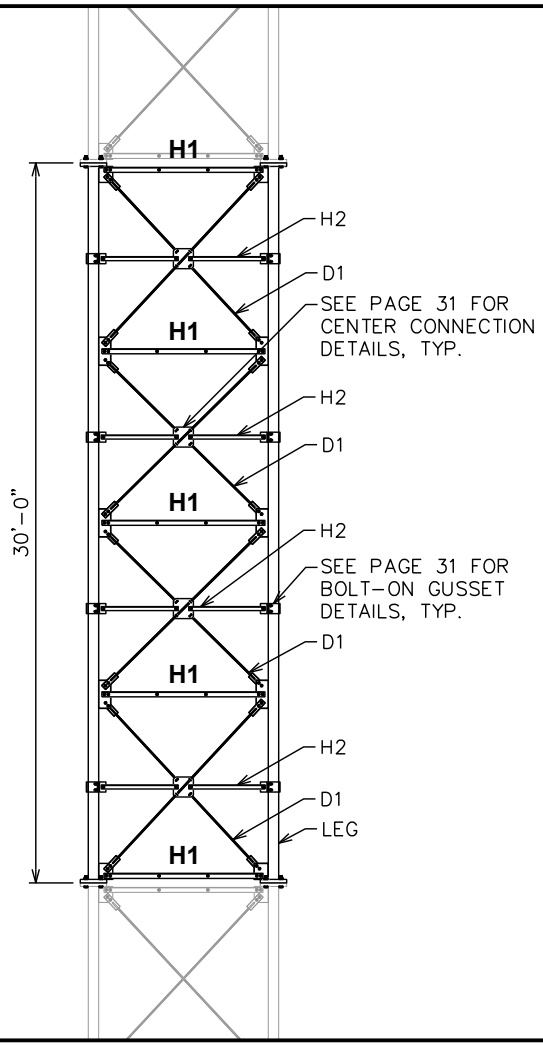


**SECTION 2 - 6 (30'-0" - 180'-0")**

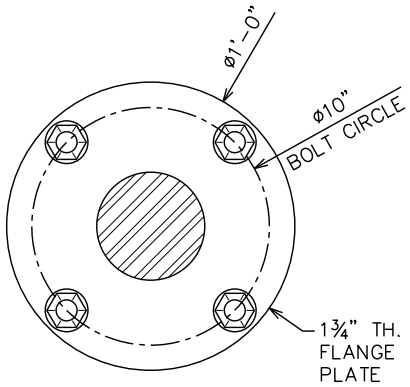


**FLANGE DETAIL**

**FLANGE PHOTO**

| Member | Size | Bolts | Stitch Bolt | Gussets/Flange |
|---|---|---|---|---|
| LEG | SEE PAGE 7 FOR DETAILS | | | 12"Ø x 1¾" THICK |
| D1 | SEE PAGE 7 FOR DETAILS | | | |
| H1 | | | | |
| H2 | | | | |

TOWER ENGINEERING PROFESSIONALS

**Face Width at Top** 7'-6"
**Face Width at Bottom** 7'-6"

**TOWER MAPPING**
Site Name WMAW ROSE HILL
TEP # 327679.814193
ASR # 1041037
Field Work Date 02/28/2023
Report Date 3/28/2023
Page 7 of 64

## MEMBER SIZES

| Section | Leg | | Diagonal | | Horizontal | | | Gusset Plate |
|---|---|---|---|---|---|---|---|---|
| | Leg Size | Bolts | Size | Bolts | Mem. | Size | Bolts | |
| 2 | 4½"Ø SR | (4) ⅞"Ø 10"Ø B.C. | ¾"Ø SR w/ ¼" TH. END TABS | (2) ⅝"Ø 1⅛" ME 2¼" B-B | H1 | 2L2x2x3/16" (⅝"Ø STITCH BOLTS @ ⅓ POINTS) | (2) ⅝"Ø 1⅛" ME 2" B-B 1⅛" GAGE | PL ¼" THICK 1⅛" ME |
| | | | | | H2 | L2x2x¼" | (1) ⅝"Ø 1⅛" ME 1⅛" GAGE | |
| 3 | 4¼"Ø SR | (4) ⅞"Ø 10"Ø B.C. | ⅝"Ø SR w/ ¼" TH. END TABS | (2) ⅝"Ø 1⅛" ME 2" B-B | H1 | 2L2x2x3/16" (⅝"Ø STITCH BOLTS @ ⅓ POINTS) | (2) ⅝"Ø 1⅛" ME 2" B-B 1⅛" GAGE | PL ¼" THICK 1⅛" ME |
| | | | | | H2 | L2x2x¼" | (1) ⅝"Ø 1⅛" ME 1⅛" GAGE | |
| 4 | 4¼"Ø SR | (4) ⅞"Ø 10"Ø B.C. | ⅝"Ø SR w/ ¼" TH. END TABS | (2) ⅝"Ø 1⅛" ME 2" B-B | H1 | 2L2x2x3/16" (⅝"Ø STITCH BOLTS @ ⅓ POINTS) | (2) ⅝"Ø 1⅛" ME 2" B-B 1⅛" GAGE | PL ¼" THICK 1⅛" ME |
| | | | | | H2 | L2x2x¼" | (1) ⅝"Ø 1⅛" ME 1⅛" GAGE | |
| 5 | 4¼"Ø SR | (4) ⅞"Ø 10"Ø B.C. | ⅝"Ø SR w/ ¼" TH. END TABS | (2) ⅝"Ø 1⅛" ME 2" B-B | H1 | 2L2x2x3/16" (⅝"Ø STITCH BOLTS @ ⅓ POINTS) | (2) ⅝"Ø 1⅛" ME 2" B-B 1⅛" GAGE | PL ¼" THICK 1⅛" ME |
| | | | | | H2 | L2x2x¼" | (1) ⅝"Ø 1⅛" ME 1⅛" GAGE | |
| 6 | 4½"Ø SR | (4) ⅞"Ø 10"Ø B.C. | ¾"Ø SR w/ ¼" TH. END TABS | (2) ⅝"Ø 1⅛" ME 2¼" B-B | H1 | 2L2x2x3/16" (⅝"Ø STITCH BOLTS @ ⅓ POINTS) | (2) ⅝"Ø 1⅛" ME 2" B-B 1⅛" GAGE | PL ¼" THICK 1⅛" ME |
| | | | | | H2 | L2x2x¼" | (1) ⅝"Ø 1⅛" ME 1⅛" GAGE | |

**TOWER MAPPING**

Site Name WMAW ROSE HILL
TEP # 327679.814193
ASR # 1041037
Field Work Date 02/28/2023
Report Date 3/28/2023
Page 8 of 64

**Face Width at Top** 7'-6"
**Face Width at Bottom** 7'-6"

## TOWER SECTION ELEVATION

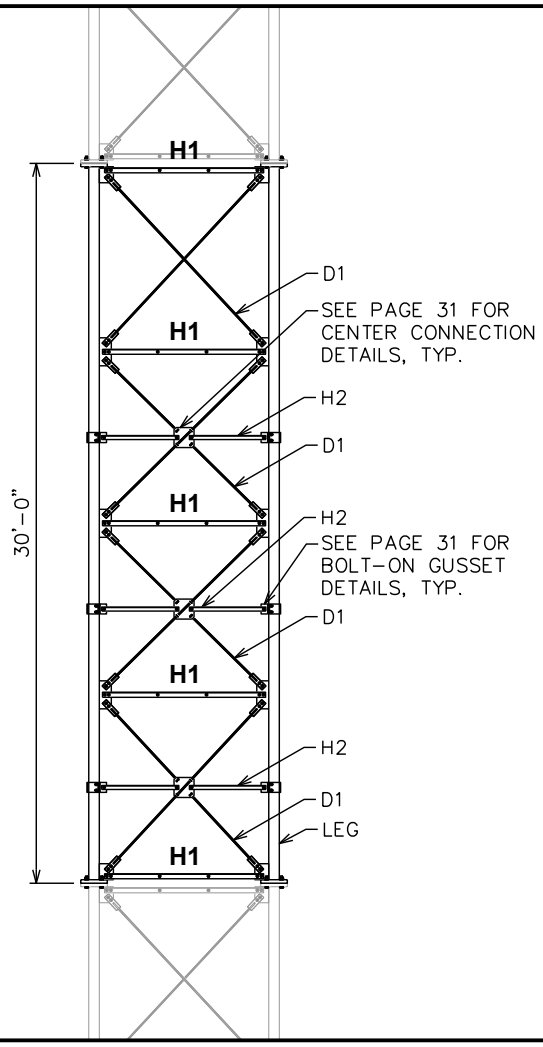


**SECTION** 7 (180'-0" - 210'-0")

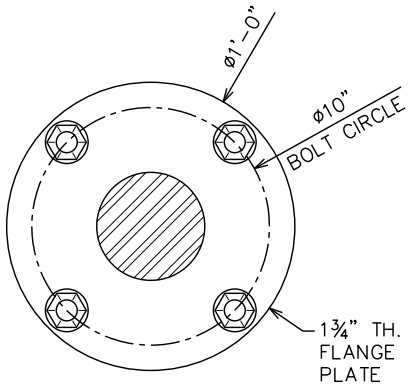


**FLANGE DETAIL**

**FLANGE PHOTO**

| Member | Size | Bolts | Stitch Bolt | Gussets/Flange |
|---|---|---|---|---|
| LEG | 4½"Ø SOLID ROD | (4) ⅞"Ø BOLTS | -- | 12"Ø x 1¾" THICK |
| D1 | ⅞"Ø SOLID ROD w/ 5/16" END TABS | (2) ¾"Ø BOLTS, 1¼" ME, 2½" SPACING | -- | 5/16" THICK, 1⅛"ME |
| H1 | 2L2x2x3/16" | (2) ⅝"Ø BOLTS, 1⅛" ME, 1⅛" GAGE, 2" SPACING | (2) ⅝"Ø | 5/16" THICK, 1⅛" ME |
| H2 | L2x2x¼" | (1) ⅝"Ø 1⅛" ME 1⅛" GAGE | -- | ¼" THICK END GUSSET ¼" THICK CENTER GUSSET |

**TOWER MAPPING**

Site Name WMAW ROSE HILL
TEP # 327679.814193
ASR # 1041037
Field Work Date 02/28/2023
Report Date 3/28/2023
Page 9 of 64

**Face Width at Top** 7'-6"
**Face Width at Bottom** 7'-6"

## TOWER SECTION ELEVATION

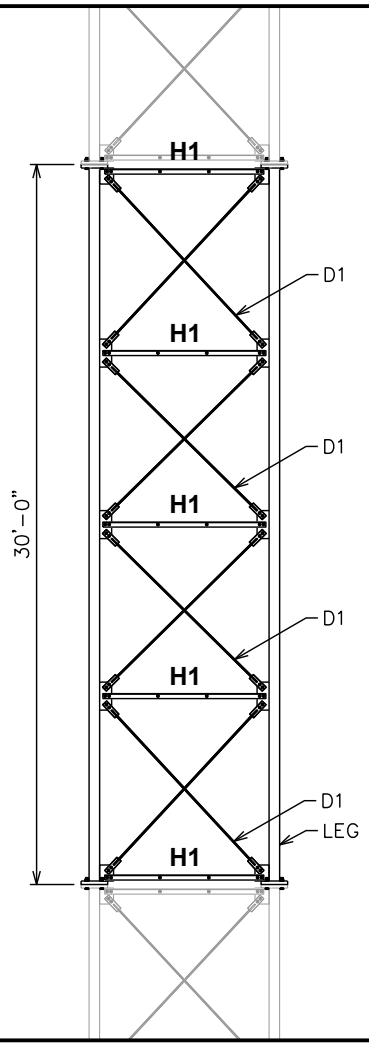


**SECTION** 8 (210'-0" - 240'-0")

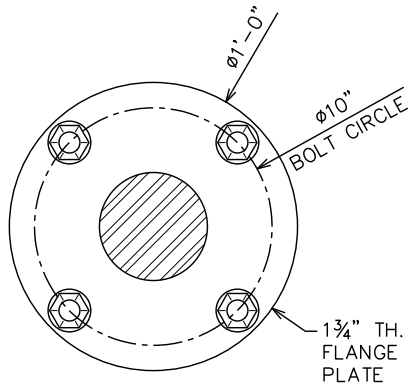


**FLANGE DETAIL**

**FLANGE PHOTO**

| Member | Size | Bolts | Stitch Bolt | Gussets/Flange |
|---|---|---|---|---|
| LEG | 4¼"Ø SOLID ROD | (4) ⅞"Ø BOLTS | -- | 12"Ø x 1¾" THICK |
| D1 | ¾"Ø SOLID ROD w/ ¼" END TABS | (2) ⅝"Ø BOLTS, 1⅛" ME, 2¼" B-B | -- | ¼" THICK, 1⅛" ME |
| H1 | 2L2x2x3/16" | (2) ⅝"Ø BOLTS, 1⅛" ME, 1⅛" GAGE, 2" SPACING | (2) ⅝"Ø | ¼" THICK, 1⅛" ME |

**TOWER MAPPING**

Site Name WMAW ROSE HILL
TEP # 327679.814193
ASR # 1041037
Field Work Date 02/28/2023
Report Date 3/28/2023
Page 10 of 64

**Face Width at Top** 7'-6"
**Face Width at Bottom** 7'-6"

## TOWER SECTION ELEVATION

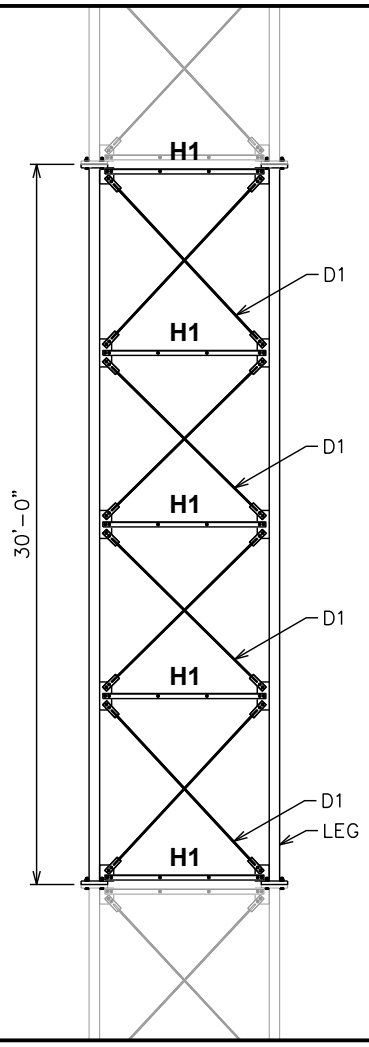


**SECTION** 9 (240'-0" - 270'-0")

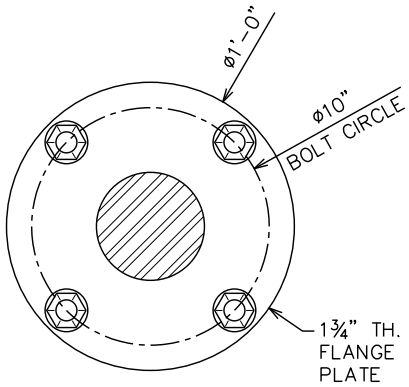


**FLANGE DETAIL**

**FLANGE PHOTO**

| Member | Size | Bolts | Stitch Bolt | Gussets/Flange |
|---|---|---|---|---|
| LEG | 4¼"Ø SOLID ROD | (4) ⅞"Ø BOLTS | -- | 12"Ø x 1¾" THICK |
| D1 | 5/8"Ø SOLID ROD w/ ¼" TH. END TABS | (2) ⅝"Ø BOLTS, 1⅛" ME, 2" B-B | -- | ¼" THICK, 1⅛" ME |
| H1 | 2L2x2x3/16" | (2) ⅝"Ø BOLTS, 1⅛" ME, 1⅛" GAGE, 2" SPACING | (2) ⅝"Ø | ¼" THICK, 1⅛" ME |

**TOWER MAPPING**

Site Name WMAW ROSE HILL
TEP # 327679.814193
ASR # 1041037
Field Work Date 02/28/2023
Report Date 3/28/2023
Page 11 of 64

**Face Width at Top** 7'-6"
**Face Width at Bottom** 7'-6"

## TOWER SECTION ELEVATION

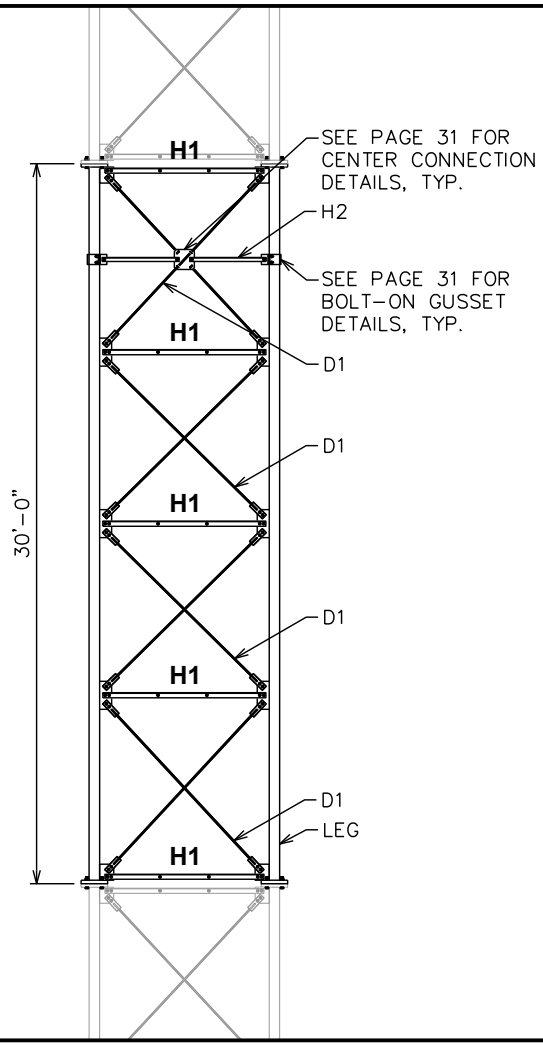


**SECTION 10 (270'-0" - 300'-0")**

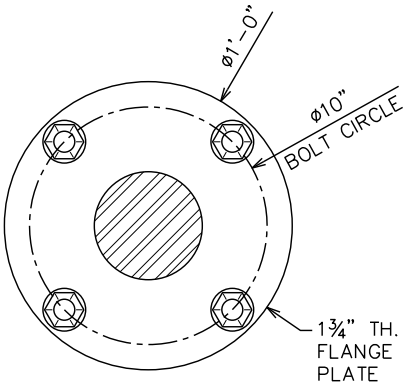


**FLANGE DETAIL**

**FLANGE PHOTO**

| Member | Size | Bolts | Stitch Bolt | Gussets/Flange |
|---|---|---|---|---|
| LEG | 4¼"Ø SOLID ROD | (4) ⅞"Ø BOLTS | -- | 12"Ø x 1¾" THICK |
| D1 | ⅝"Ø SOLID ROD w/ ¼" END TABS | (2) ⅝"Ø BOLTS, 1⅛" ME, 2" SPACING | -- | ¼" THICK |
| H1 | 2L2x2x3/16" | (2) ⅝"Ø BOLTS, 1⅛" ME, 1⅛" GAGE, 2" SPACING | (2) ⅝"Ø | ¼" THICK |
| H2 | L2x2x¼" | (1) ⅝"Ø 1⅛" ME 1⅛" GAGE | -- | ¼" THICK END GUSSET ¼" THICK CENTER GUSSET |

**TOWER MAPPING**

Site Name WMAW ROSE HILL
TEP # 327679.814193
ASR # 1041037
Field Work Date 02/28/2023
Report Date 3/28/2023
Page 12 of 64

**Face Width at Top** 7'-6"
**Face Width at Bottom** 7'-6"

## TOWER SECTION ELEVATION

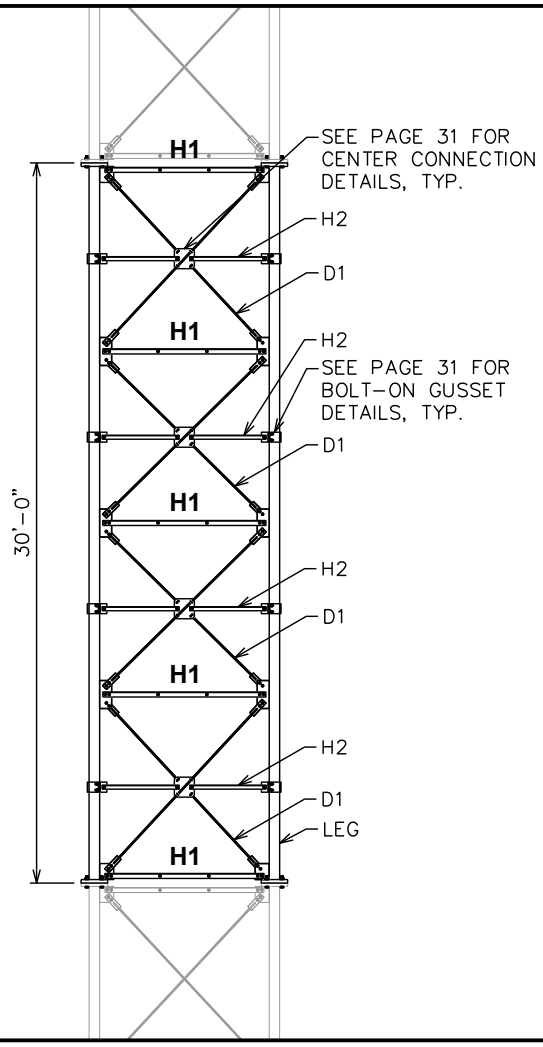


**SECTION 11 (300'-0" - 330'-0")**

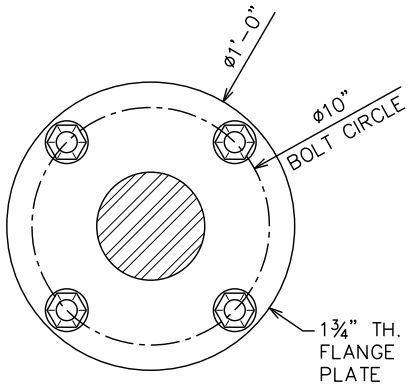


**FLANGE DETAIL**

**FLANGE PHOTO**

| Member | Size | Bolts | Stitch Bolt | Gussets/Flange |
|---|---|---|---|---|
| LEG | 4"Ø SOLID ROD | (4) ⅞"Ø BOLTS | -- | 12"Ø x 1¾" THICK |
| D1 | ⅝"Ø SOLID ROD w/ ¼" END TABS | (2) ⅝"Ø BOLTS, 1⅛" ME, 2" SPACING | -- | ¼" THICK |
| H1 | 2L2x2x3/16" | (2) ⅝"Ø BOLTS, 1⅛" ME, 1⅛" GAGE, 2" SPACING | (2) ⅝"Ø | ¼" THICK |
| H2 | L2x2x¼" | (1) ⅝"Ø 1⅛" ME 1⅛" GAGE | -- | ¼" THICK END GUSSET ¼" THICK CENTER GUSSET |

**TOWER MAPPING**

Site Name WMAW ROSE HILL
TEP # 327679.814193
ASR # 1041037
Field Work Date 02/28/2023
Report Date 3/28/2023
Page 13 of 64

**Face Width at Top** 7'-6"
**Face Width at Bottom** 7'-6"

## TOWER SECTION ELEVATION

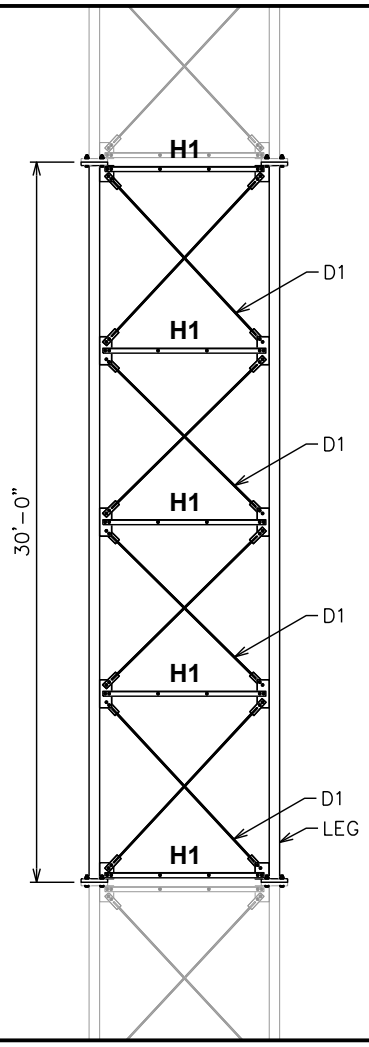


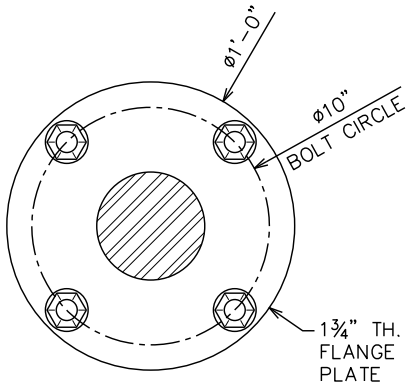


**FLANGE DETAIL**

**SECTION** 12 - 14 (330'-0" - 420'-0")

**FLANGE PHOTO**

| Member | Size | Bolts | Stitch Bolt | Gussets/Flange |
|---|---|---|---|---|
| LEG | SEE PAGE 14 FOR DETAILS | | | 12"Ø x 1¾" THICK |
| D1 | SEE PAGE 14 FOR DETAILS | | | |
| H1 | | | | |

**TOWER MAPPING**

Site Name WMAW ROSE HILL
TEP # 327679.814193
ASR # 1041037
Field Work Date 02/28/2023
Report Date 3/28/2023
Page 14 of 64

**Face Width at Top** 7'-6"
**Face Width at Bottom** 7'-6"

## MEMBER SIZES

| Section | Leg | | Diagonal | | Horizontal | | Gusset Plate |
|---|---|---|---|---|---|---|---|
| | Leg Size | Bolts | Size | Bolts | Size | Bolts | |
| 12 | 4¼"Ø SR | (4) ⅞"Ø 10"Ø B.C. | ¾"Ø SR w/ ¼" TH. END TABS | (2) ⅝"Ø 1⅛" ME 2¼" B-B | 2L2x2x3/16" (⅝"Ø STITCH BOLTS @ ⅓ POINTS) | (2) ⅝"Ø 1⅛" ME 2" B-B 1⅛" GAGE | PL ¼" THICK 1⅛" ME |
| 13 | 4½"Ø SR | (4) ⅞"Ø 10"Ø B.C. | 1"Ø SR w/ ⅜" TH. END TABS | (2) ⅞"Ø 1½" ME 2¾" B-B | 2L2x2x3/16" (⅝"Ø STITCH BOLTS @ ⅓ POINTS) | (2) ⅝"Ø 1⅛" ME 2" B-B 1⅛" GAGE | PL ⅜" THICK 1⅛" ME |
| 14 | 4¼"Ø SR | (4) ⅞"Ø 10"Ø B.C. | 1"Ø SR w/ ⅜" TH. END TABS | (2) ⅞"Ø 1½" ME 2¾" B-B | 2L2x2x3/16" (⅝"Ø STITCH BOLTS @ ⅓ POINTS) | (2) ⅝"Ø 1⅛" ME 2" B-B 1⅛" GAGE | PL ⅜" THICK 1⅛" ME |

**TOWER MAPPING**

Site Name WMAW ROSE HILL
TEP # 327679.814193
ASR # 1041037
Field Work Date 02/28/2023
Report Date 3/28/2023
Page 15 of 64

**Face Width at Top** 7'-6"
**Face Width at Bottom** 7'-6"

## TOWER SECTION ELEVATION

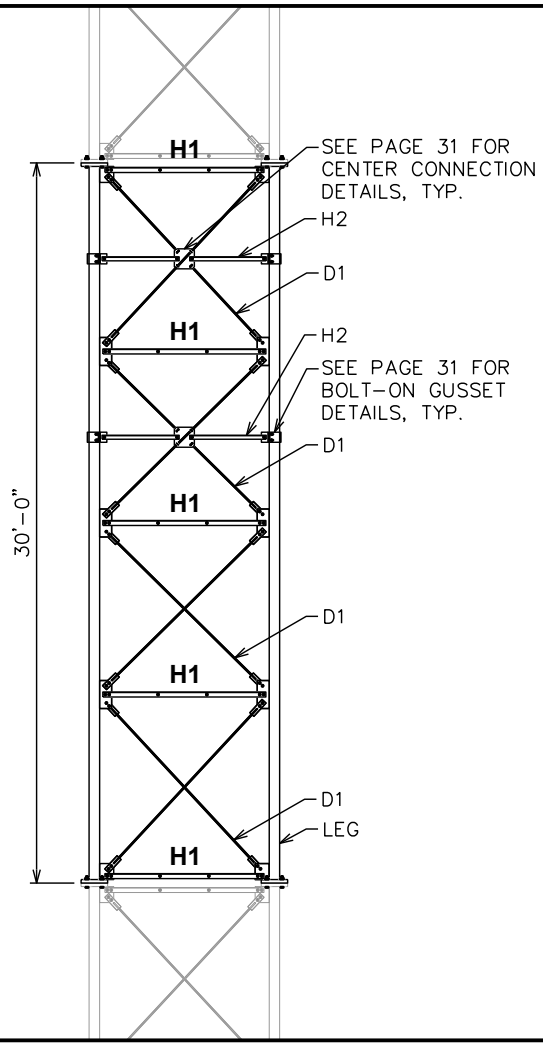


**SECTION 15 (420'-0" - 450'-0")**

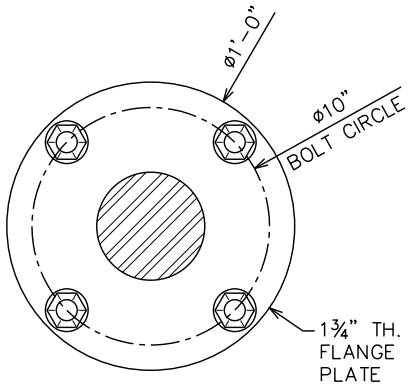


**FLANGE DETAIL**

**FLANGE PHOTO**

| Member | Size | Bolts | Stitch Bolt | Gussets/Flange |
|---|---|---|---|---|
| LEG | 3¾"Ø SOLID ROD | (4) ⅞"Ø BOLTS | -- | 12"Ø x 1¾" THICK |
| D1 | ⅞"Ø SOLID ROD w/ 5/16" END TABS | (2) ¾"Ø BOLTS, 1¼" ME, 2½" SPACING | -- | 5/16" THICK |
| H1 | 2L2x2x3/16" | (2) ⅝"Ø BOLTS, 1⅛" ME, 1⅛" GAGE, 2" SPACING | (2) ⅝"Ø | 5/16" THICK |
| H2 | L2x2x¼" | (1) ⅝"Ø 1⅛" ME 1⅛" GAGE | -- | ¼" THICK END GUSSET ¼" THICK CENTER GUSSET |

**TOWER MAPPING**

Site Name WMAW ROSE HILL
TEP # 327679.814193
ASR # 1041037
Field Work Date 02/28/2023
Report Date 3/28/2023
Page 16 of 64

**Face Width at Top** 7'-6"
**Face Width at Bottom** 7'-6"

## TOWER SECTION ELEVATION

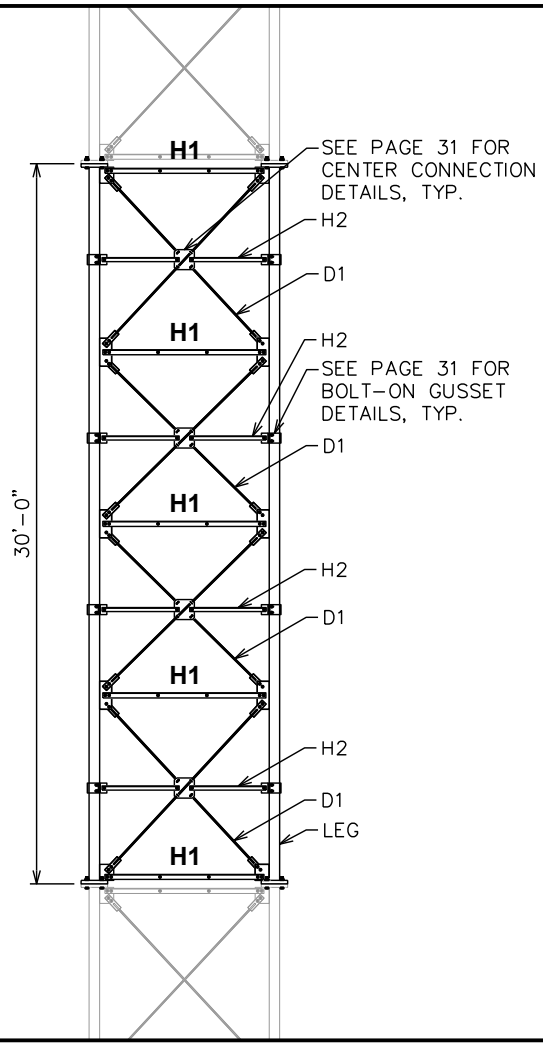


**SECTION 16 (450'-0" - 480'-0")**

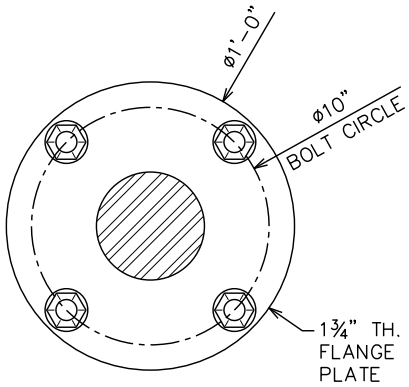


**FLANGE DETAIL**

**FLANGE PHOTO**

| Member | Size | Bolts | Stitch Bolt | Gussets/Flange |
|---|---|---|---|---|
| LEG | 3¾"Ø SOLID ROD | (4) ⅞"Ø BOLTS | -- | 12"Ø x 1¾" THICK |
| D1 | ¾"Ø SOLID ROD w/ ¼" END TABS | (2) ⅝"Ø BOLTS, 1⅛" ME, 2¼" SPACING | -- | ¼" THICK |
| H1 | 2L2x2x3/16" | (2) ⅝"Ø BOLTS, 1⅛" ME, 1⅛" GAGE, 2" SPACING | (2) ⅝"Ø | ¼" THICK |
| H2 | L2x2x¼" | (1) ⅝"Ø 1⅛" ME 1⅛" GAGE | -- | ¼" THICK END GUSSET ¼" THICK CENTER GUSSET |

**TOWER MAPPING**

Site Name WMAW ROSE HILL
TEP # 327679.814193
ASR # 1041037
Field Work Date 02/28/2023
Report Date 3/28/2023
Page 17 of 64

**Face Width at Top** 7'-6"
**Face Width at Bottom** 7'-6"

## TOWER SECTION ELEVATION

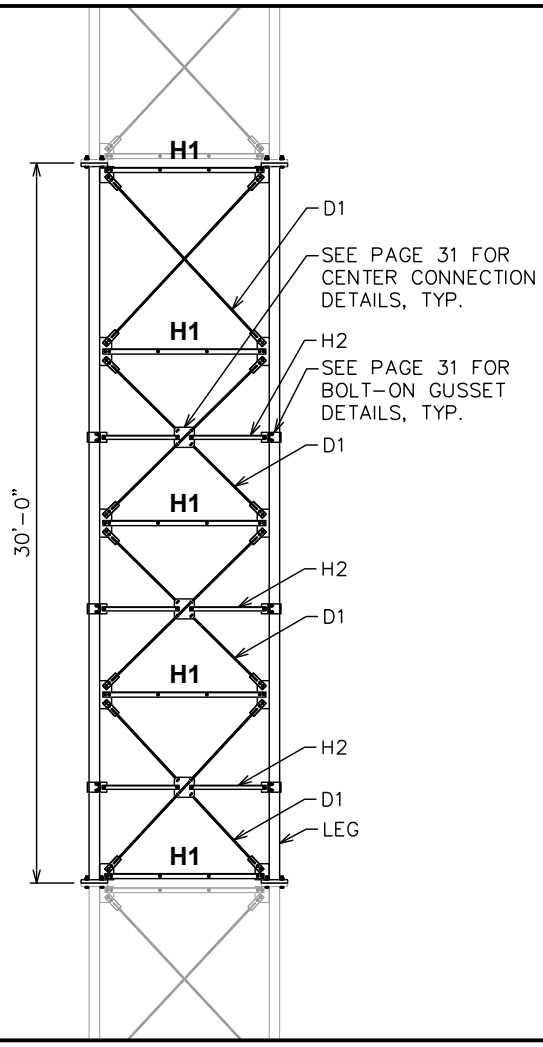


**SECTION 17 (480'-0" - 510'-0")**

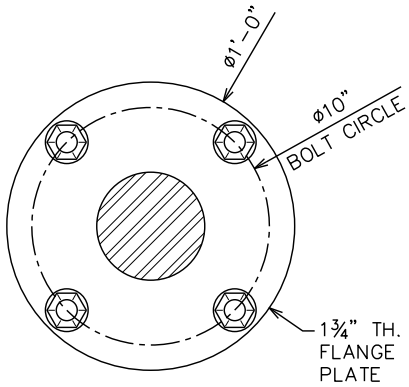


**FLANGE DETAIL**

**FLANGE PHOTO**

| Member | Size | Bolts | Stitch Bolt | Gussets/Flange |
|---|---|---|---|---|
| LEG | 3¾"Ø SOLID ROD | (4) ⅞"Ø BOLTS | -- | 12"Ø x 1¾" THICK |
| D1 | ⅝"Ø SOLID ROD w/ ¼" END TABS | (2) ⅝"Ø BOLTS, 1⅛" ME, 2" SPACING | -- | ¼" THICK |
| H1 | 2L2x2x3/16" | (2) ⅝"Ø BOLTS, 1⅛" ME, 1⅛" GAGE, 2" SPACING | (2) ⅝"Ø | ¼" THICK |
| H2 | L2x2x¼" | (1) ⅝"Ø 1⅛" ME 1⅛" GAGE | -- | ¼" THICK END GUSSET ¼" THICK CENTER GUSSET |

**TOWER MAPPING**

Site Name WMAW ROSE HILL
TEP # 327679.814193
ASR # 1041037
Field Work Date 02/28/2023
Report Date 3/28/2023
Page 18 of 64

**Face Width at Top** 7'-6"
**Face Width at Bottom** 7'-6"

## TOWER SECTION ELEVATION

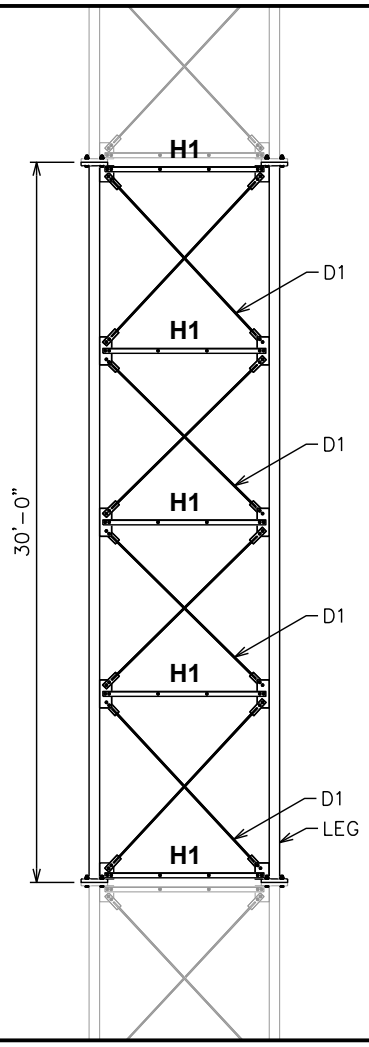


**SECTION** 18 (510'-0" - 540'-0")

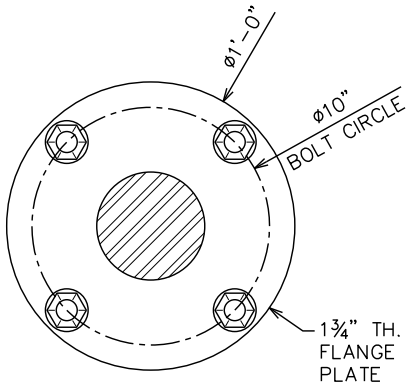


**FLANGE DETAIL**

**FLANGE PHOTO**

| Member | Size | Bolts | Stitch Bolt | Gussets/Flange |
|---|---|---|---|---|
| LEG | 3¾"Ø SOLID ROD | (4) ⅞"Ø BOLTS | -- | 12"Ø x 1¾" THICK |
| D1 | ¾"Ø SOLID ROD w/ ¼" TH. END TABS | (2) ⅝"Ø BOLTS, 1⅛" ME, 2¼" B-B | -- | ¼" THICK, 1⅛" ME |
| H1 | 2L2x2x3/16" | (2) ⅝"Ø BOLTS, 1⅛" ME, 1⅛" GAGE, 2" SPACING | (2) ⅝"Ø | ¼" THICK, 1⅛" ME |

**TOWER MAPPING**

Site Name WMAW ROSE HILL
TEP # 327679.814193
ASR # 1041037
Field Work Date 02/28/2023
Report Date 3/28/2023
Page 19 of 64

**Face Width at Top** 7'-6"
**Face Width at Bottom** 7'-6"

## TOWER SECTION ELEVATION

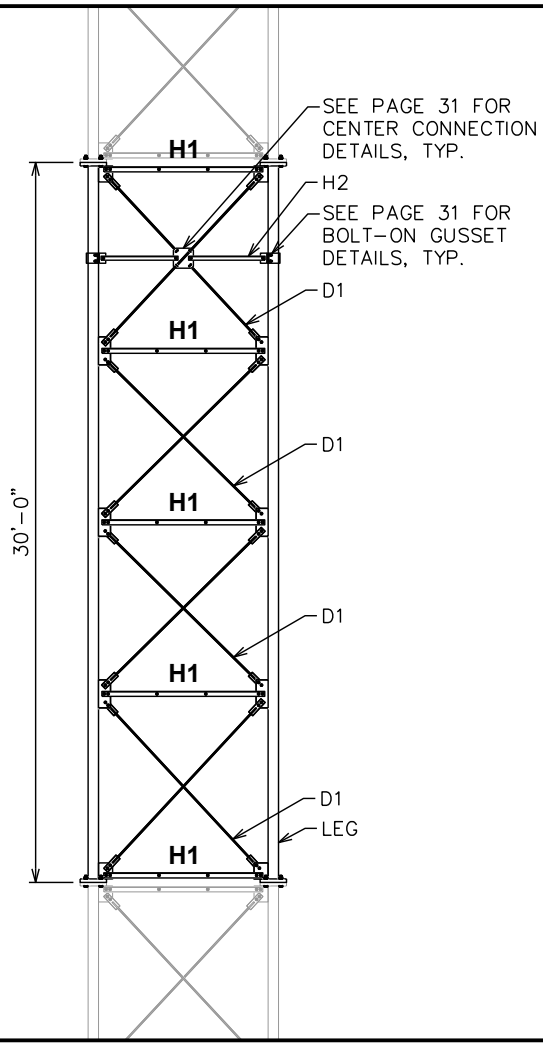


**SECTION** 19 (540'-0" - 570'-0")

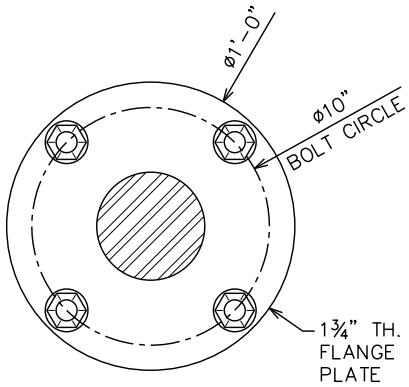


**FLANGE DETAIL**

**FLANGE PHOTO**

| Member | Size | Bolts | Stitch Bolt | Gussets/Flange |
|---|---|---|---|---|
| LEG | 3¾"Ø SOLID ROD | (4) ⅞"Ø BOLTS | -- | 12"Ø x 1¾" THICK |
| D1 | ⅞"Ø SOLID ROD w/ 5/16" TH. END TABS | (2) ¾"Ø BOLTS, 1¼" ME, 2½" B-B | -- | 5/16" THICK, 1⅛" ME |
| H1 | 2L2x2x3/16" | (2) ⅝"Ø BOLTS, 1⅛" ME, 1⅛" GAGE, 2" SPACING | (2) ¾"Ø | 5/16" THICK, 1⅛" ME |
| H2 | L2x2x¼" | (1) ⅝"Ø 1⅛" ME 1⅛" GAGE | -- | ¼" THICK END GUSSET ¼" THICK CENTER GUSSET |

**TOWER MAPPING**

Site Name WMAW ROSE HILL
TEP # 327679.814193
ASR # 1041037
Field Work Date 02/28/2023
Report Date 3/28/2023
Page 20 of 64

**Face Width at Top** 7'-6"
**Face Width at Bottom** 7'-6"

## TOWER SECTION ELEVATION

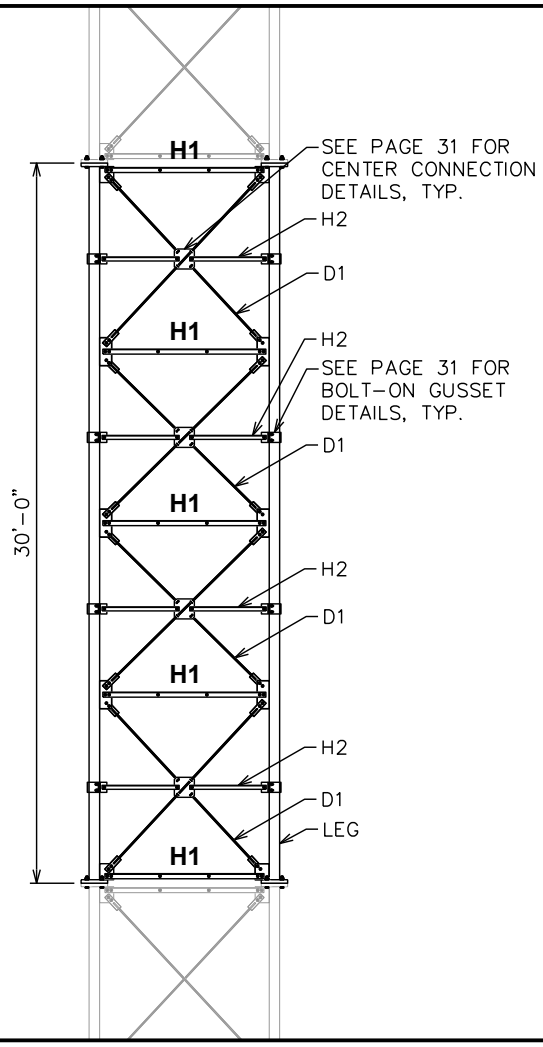


**SECTION 20 (570'-0" - 600'-0")**

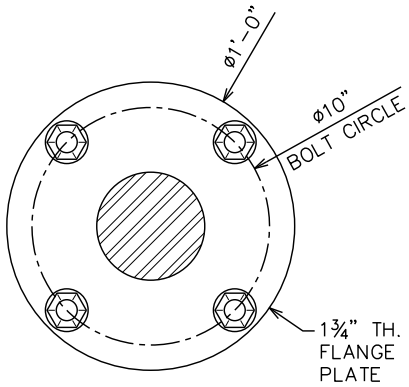


**FLANGE DETAIL**

**FLANGE PHOTO**

| Member | Size | Bolts | Stitch Bolt | Gussets/Flange |
|---|---|---|---|---|
| LEG | 4"Ø SOLID ROD | (4) ⅞"Ø BOLTS | -- | 12"Ø x 1¾" THICK |
| D1 | ⅞"Ø SOLID ROD w/ 5/16" END TABS | (2) ¾"Ø BOLTS, 1¼" ME, 2½" SPACING | -- | 5/16" THICK |
| H1 | 2L2x2x3/16" | (2) ⅝"Ø BOLTS, 1⅛" ME, 1⅛" GAGE, 2" SPACING | (2) ⅝"Ø | 5/16" THICK |
| H2 | L2x2x¼" | (1) ⅝"Ø 1⅛" ME 1⅛" GAGE | -- | ¼" THICK END GUSSET ¼" THICK CENTER GUSSET |

**TOWER MAPPING**

Site Name WMAW ROSE HILL
TEP # 327679.814193
ASR # 1041037
Field Work Date 02/28/2023
Report Date 3/28/2023
Page 21 of 64

**Face Width at Top** 7'-6"
**Face Width at Bottom** 7'-6"

## TOWER SECTION ELEVATION

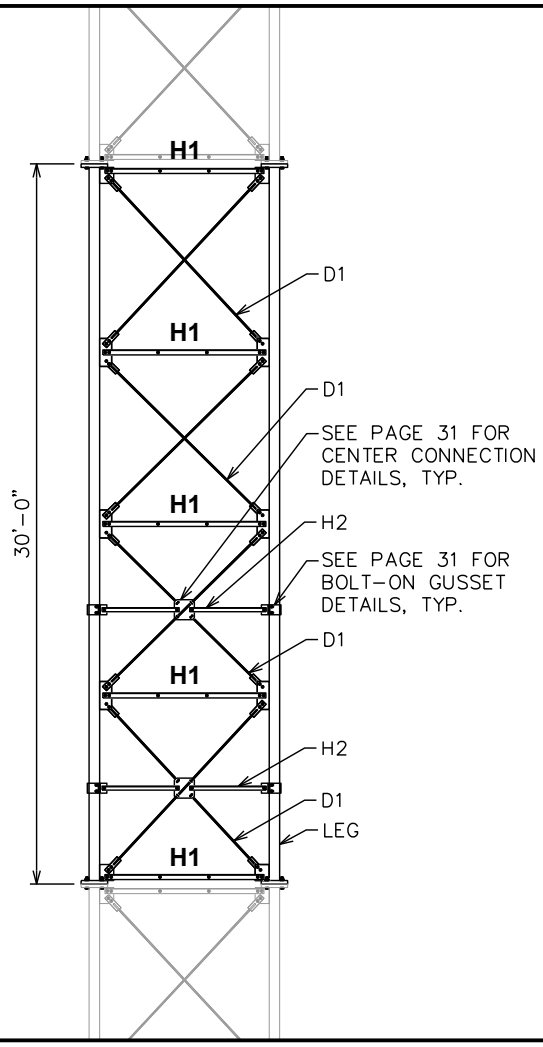


**SECTION 21 (600'-0" - 630'-0")**

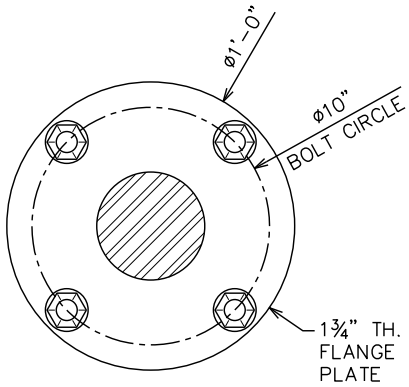


**FLANGE DETAIL**

**FLANGE PHOTO**

| Member | Size | Bolts | Stitch Bolt | Gussets/Flange |
|---|---|---|---|---|
| LEG | 3¾"Ø SOLID ROD | (4) ⅞"Ø BOLTS | -- | 12"Ø x 1¾" THICK |
| D1 | ¾"Ø SOLID ROD w/ ¼" END TABS | (2) ⅝"Ø BOLTS, 1⅛" ME, 2¼" SPACING | -- | ¼" THICK |
| H1 | 2L2x2x3/16" | (2) ⅝"Ø BOLTS, 1⅛" ME, 1⅛" GAGE, 2" SPACING | (2) ⅝"Ø | ¼" THICK |
| H2 | L2x2x¼" | (1) ⅝"Ø 1⅛" ME 1⅛" GAGE | -- | ¼" THICK END GUSSET ¼" THICK CENTER GUSSET |

**TOWER MAPPING**

Site Name WMAW ROSE HILL
TEP # 327679.814193
ASR # 1041037
Field Work Date 02/28/2023
Report Date 3/28/2023
Page 22 of 64

**Face Width at Top** 7'-6"
**Face Width at Bottom** 7'-6"

## TOWER SECTION ELEVATION

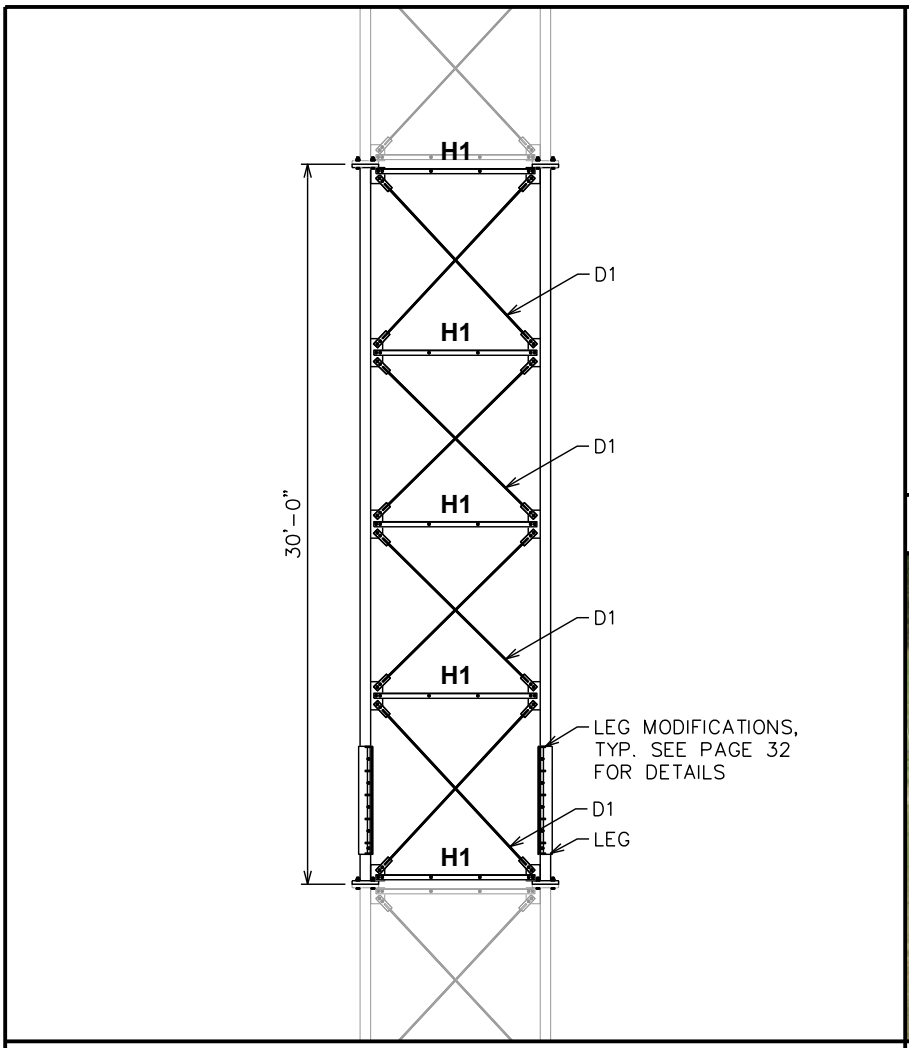


**SECTION 22 (630'-0" - 660'-0")**

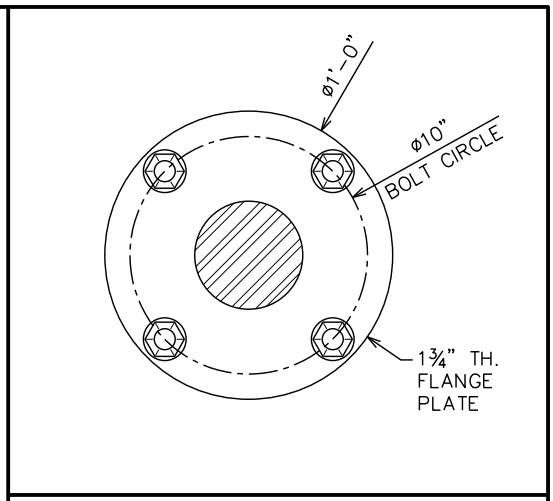


**FLANGE DETAIL**

**FLANGE PHOTO**

| Member | Size | Bolts | Stitch Bolt | Gussets/Flange |
|---|---|---|---|---|
| LEG | 3½"Ø SOLID ROD | (4) ⅞"Ø BOLTS | -- | 12"Ø x 1¾" THICK |
| D1 | ⅝"Ø SOLID ROD w/ ¼" END TABS | (2) ⅝"Ø BOLTS, 1⅛" ME, 2" SPACING | -- | ¼" THICK |
| H1 | 2L2x2x3/16" | (2) ⅝"Ø BOLTS, 1⅛" ME, 1⅛" GAGE, 2" SPACING | (2) ⅝"Ø | ¼" THICK |

**TOWER MAPPING**

Site Name WMAW ROSE HILL
TEP # 327679.814193
ASR # 1041037
Field Work Date 02/28/2023
Report Date 3/28/2023
Page 23 of 64

**Face Width at Top** 7'-6"
**Face Width at Bottom** 7'-6"

## TOWER SECTION ELEVATION

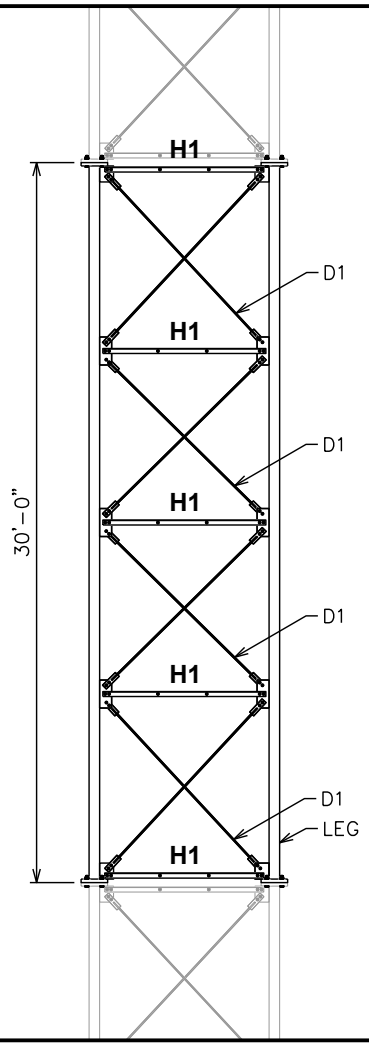


**SECTION 23-26 (660'-0" - 780'-0")**

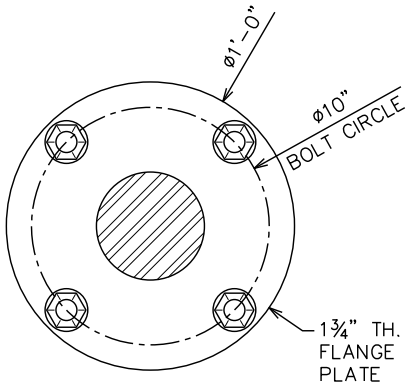


**FLANGE DETAIL**

**FLANGE PHOTO**

| Member | Size | Bolts | Stitch Bolt | Gussets/Flange |
|---|---|---|---|---|
| LEG | SEE PAGE 24 FOR DETAILS | | | 12"Ø x 1¾" THICK |
| D1 | SEE PAGE 24 FOR DETAILS | | | |
| H1 | | | | |

**TOWER MAPPING**

Site Name WMAW ROSE HILL
TEP # 327679.814193
ASR # 1041037
Field Work Date 02/28/2023
Report Date 3/28/2023
Page 24 of 64

**Face Width at Top** 7'-6"
**Face Width at Bottom** 7'-6"

## MEMBER SIZES

| Section | Leg | | Diagonal | | Horizontal | | Gusset Plate |
|---|---|---|---|---|---|---|---|
| | Leg Size | Bolts | Size | Bolts | Size | Bolts | |
| 23 | 3½"Ø SR | (4) ⅞"Ø 10"Ø B.C. | ⅝"Ø SR w/ ¼" TH. END TABS | (2) ⅝"Ø 1⅛" ME 2" B-B | 2L2x2x3/16" (⅝"Ø STITCH BOLTS @ ⅓ POINTS) | (2) ⅝"Ø 1⅛" ME 2" B-B 1⅛" GAGE | PL ¼" THICK 1⅛" ME |
| 24 | 3½"Ø SR | (4) ⅞"Ø 10"Ø B.C. | ⅝"Ø SR w/ ¼" TH. END TABS | (2) ⅝"Ø 1⅛" ME 2" B-B | 2L2x2x3/16" (⅝"Ø STITCH BOLTS @ ⅓ POINTS) | (2) ⅝"Ø 1⅛" ME 2" B-B 1⅛" GAGE | PL ¼" THICK 1⅛" ME |
| 25 | 3½"Ø SR | (4) ⅞"Ø 10"Ø B.C. | ¾"Ø SR w/ ¼" TH. END TABS | (2) ⅝"Ø 1⅛" ME 2¼" B-B | 2L2x2x3/16" (⅝"Ø STITCH BOLTS @ ⅓ POINTS) | (2) ⅝"Ø 1⅛" ME 2" B-B 1⅛" GAGE | PL ¼" THICK 1⅛" ME |
| 26 | 3¾"Ø SR | (4) ⅞"Ø 10"Ø B.C. | ⅞"Ø SR w/ 5/16" TH. END TABS | (2) ¾"Ø 1¼" ME 2½" B-B | 2L2x2x3/16" (⅝"Ø STITCH BOLTS @ ⅓ POINTS) | (2) ⅝"Ø 1⅛" ME 2" B-B 1⅛" GAGE | PL 5/16" THICK 1⅛" ME |

**TOWER MAPPING**

Site Name WMAW ROSE HILL
TEP # 327679.814193
ASR # 1041037
Field Work Date 02/28/2023
Report Date 3/28/2023
Page 25 of 64

**Face Width at Top** 7'-6"
**Face Width at Bottom** 7'-6"

## TOWER SECTION ELEVATION

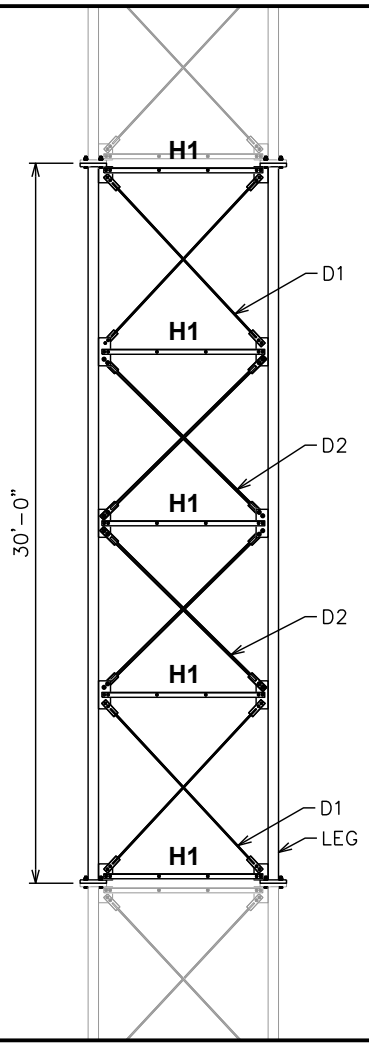


**SECTION 27 (780'-0" - 810'-0")**

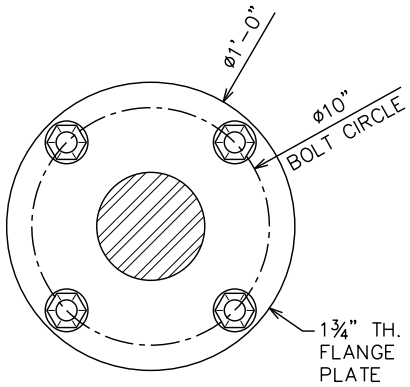


**FLANGE DETAIL**

**FLANGE PHOTO**

| Member | Size | Bolts | Stitch Bolt | Gussets/Flange |
|---|---|---|---|---|
| LEG | 3¾"Ø SOLID ROD | (4) ⅞"Ø BOLTS | -- | 12"Ø x 1¾" THICK |
| D1 | ⅞"Ø SOLID ROD w/ 5/16" END TABS | (2) ¾"Ø BOLTS, 1¼" ME, 2½" SPACING | -- | 5/16" THICK, 1⅛" ME |
| D2 | 1"Ø SOLID ROD w/ ⅝" TH. END TABS | (2) ⅞"Ø BOLTS, 1½" ME, 2½" SPACING | -- | 5/16" THICK |
| H1 | 2L2x2x3/16" | (2) ⅝"Ø BOLTS, 1⅛" ME, 1⅛" GAGE, 2" SPACING | (2) ⅝"Ø | 5/16" THICK, 1⅛" ME |

**TOWER MAPPING**

Site Name WMAW ROSE HILL
TEP # 327679.814193
ASR # 1041037
Field Work Date 02/28/2023
Report Date 3/28/2023
Page 26 of 64

**Face Width at Top** 7'-6"
**Face Width at Bottom** 7'-6"

## TOWER SECTION ELEVATION

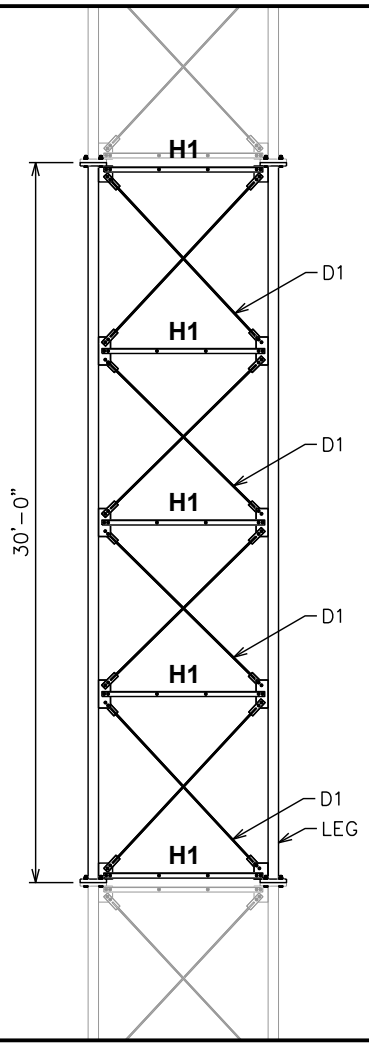


**SECTION 28-32 (810'-0" - 960'-0")**

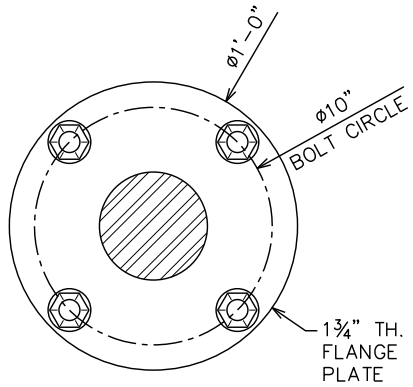


**FLANGE DETAIL**

**FLANGE PHOTO**

| Member | Size | Bolts | Stitch Bolt | Gussets/Flange |
|---|---|---|---|---|
| LEG | SEE PAGE 27 FOR DETAILS | | | 12"Ø x 1¾" THICK |
| D1 | SEE PAGE 27 FOR DETAILS | | | |
| H1 | | | | |

TOWER ENGINEERING PROFESSIONALS

**Face Width at Top** 7'-6"
**Face Width at Bottom** 7'-6"

**TOWER MAPPING**
Site Name WMAW ROSE HILL
TEP # 327679.814193
ASR # 1041037
Field Work Date 02/28/2023
Report Date 3/28/2023


**MEMBER SIZES**

| Section | Leg | | Diagonal | | Horizontal | | Gusset Plate |
|---|---|---|---|---|---|---|---|
| | Leg Size | Bolts | Size | Bolts | Size | Bolts | |
| 28 | 3¼"Ø SR | (4) ⅞"Ø 10"Ø B.C. | ⅞"Ø SR w/ 5/16" TH. END TABS | (2) ¾"Ø 1¼" ME 2½" B-B | 2L2x2x3/16" (⅝"Ø STITCH BOLTS @ ⅓ POINTS) | (2) ⅝"Ø 1⅛" ME 2" B-B 1⅛" GAGE | PL 5/16" THICK 1⅛" ME |
| 29 | 3¼"Ø SR | (4) ⅞"Ø 10"Ø B.C. | ¾"Ø SR w/ ¼" TH. END TABS | (2) ⅝"Ø 1⅛" ME 2¼" B-B | 2L2x2x3/16" (⅝"Ø STITCH BOLTS @ ⅓ POINTS) | (2) ⅝"Ø 1⅛" ME 2" B-B 1⅛" GAGE | PL ¼" THICK 1⅛" ME |
| 30 | 3½"Ø SR | (4) ⅞"Ø 10"Ø B.C. | ⅝"Ø SR w/ ¼" TH. END TABS | (2) ⅝"Ø 1⅛" ME 2" B-B | 2L2x2x3/16" (⅝"Ø STITCH BOLTS @ ⅓ POINTS) | (2) ⅝"Ø 1⅛" ME 2" B-B 1⅛" GAGE | PL ¼" THICK 1⅛" ME |
| 31 | 3½"Ø SR | (4) ⅞"Ø 10"Ø B.C. | ⅝"Ø SR w/ ¼" TH. END TABS | (2) ⅝"Ø 1⅛" ME 2" B-B | 2L2x2x3/16" (⅝"Ø STITCH BOLTS @ ⅓ POINTS) | (2) ⅝"Ø 1⅛" ME 2" B-B 1⅛" GAGE | PL ¼" THICK 1⅛" ME |
| 32 | 3½"Ø SR | (4) ⅞"Ø 10"Ø B.C. | ⅝"Ø SR w/ ¼" TH. END TABS | (2) ⅝"Ø 1⅛" ME 2" B-B | 2L2x2x3/16" (⅝"Ø STITCH BOLTS @ ⅓ POINTS) | (2) ⅝"Ø 1⅛" ME 2" B-B 1⅛" GAGE | PL ¼" THICK 1⅛" ME |

**TOWER MAPPING**

Site Name WMAW ROSE HILL
TEP # 327679.814193
ASR # 1041037
Field Work Date 02/28/2023
Report Date 3/28/2023
Page 28 of 64

**Face Width at Top** 7'-6"
**Face Width at Bottom** 7'-6"

## TOWER SECTION ELEVATION

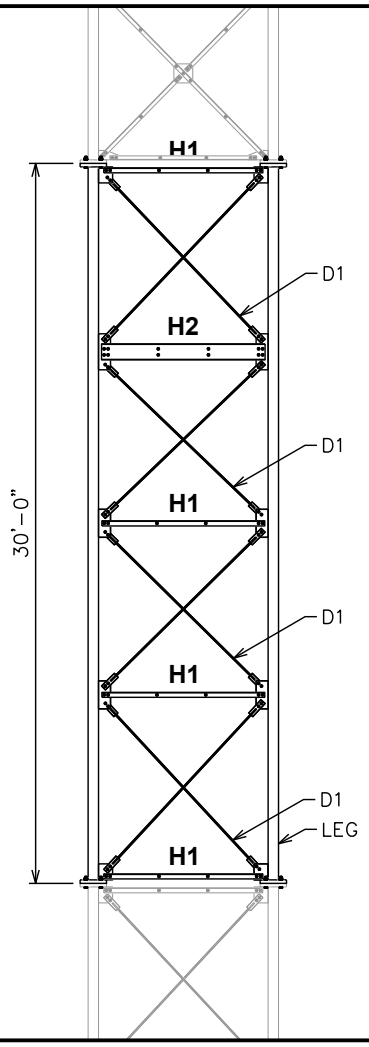


**SECTION** 33 (960'-0" - 990'-0")

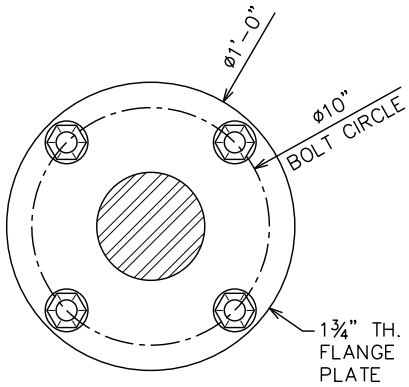


**FLANGE DETAIL**

**FLANGE PHOTO**

| Member | Size | Bolts | Stitch Bolt | Gussets/Flange |
|---|---|---|---|---|
| LEG | 3¼"Ø SOLID ROD | (4) ⅞"Ø BOLTS | -- | 12"Ø x 1¾" THICK |
| D1 | ¾"Ø SOLID ROD w/ ¼" END TABS | (2) ⅝"Ø BOLTS, 1⅛" ME, 2¼" SPACING | -- | ¼" THICK |
| H1 | 2L2x2x3/16" | (2) ⅝"Ø BOLTS, 1⅛" ME, 1⅛" GAGE, 2" SPACING | (2) ⅝"Ø | ¼" THICK |
| H2 | 2C8x11.5 | (4) ⅝"Ø BOLTS, 1⅛" ME, 2½" SPACING | (2) ⅝"Ø @ ⅓ POINTS | ¼" THICK |

**TOWER MAPPING**

Site Name WMAW ROSE HILL
TEP # 327679.814193
ASR # 1041037
Field Work Date 02/28/2023
Report Date 3/28/2023
Page 29 of 64

**Face Width at Top** 7'-6"
**Face Width at Bottom** 7'-6"

## TOWER SECTION ELEVATION

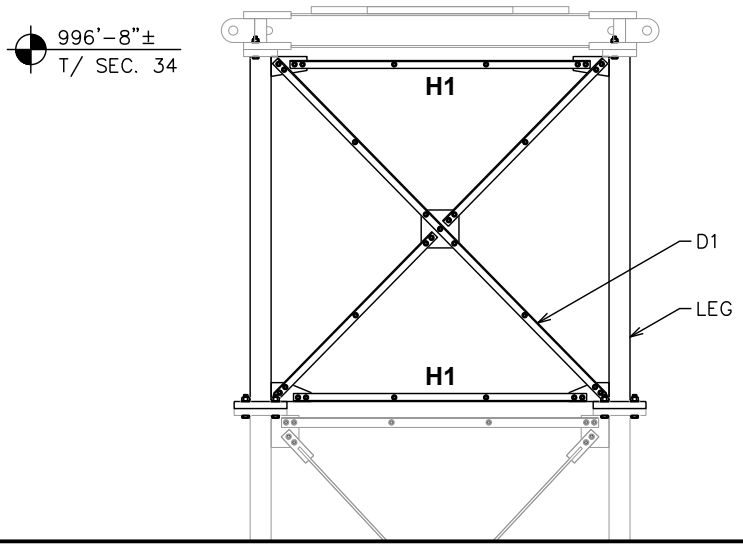


**SECTION 34 (990'-0" - 996'-8")**

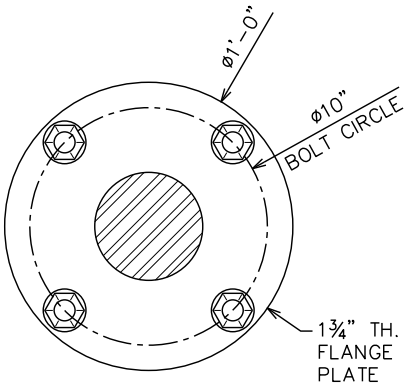


**FLANGE DETAIL**

**FLANGE PHOTO**

| Member | Size | Bolts | Stitch Bolt | Gussets/Flange |
|---|---|---|---|---|
| LEG | 3"Ø SOLID ROD | (4) ⅞"Ø BOLTS | -- | 12"Ø x 1¾" THICK |
| D1 | 2L2x2x3/16" | (2) ⅝"Ø BOLTS, 1⅛" ME, 1⅛" GAGE, 2" SPACING | (2) ⅝"Ø | ⅜" THICK |
| H1 | 2L2x2x3/16" | (2) ⅝"Ø BOLTS, 1⅛" ME, 1⅛" GAGE, 2" SPACING | (2) ⅝"Ø | ⅜" THICK |

**TOWER MAPPING**

Site Name WMAW ROSE HILL
TEP # 327679.814193
ASR # 1041037
Field Work Date 02/28/2023
Report Date 3/28/2023
Page 30 of 64

**Face Width at Top** 7'-6"
**Face Width at Bottom** 7'-6"

## TOP GUY PULL-OFF WELDMENT

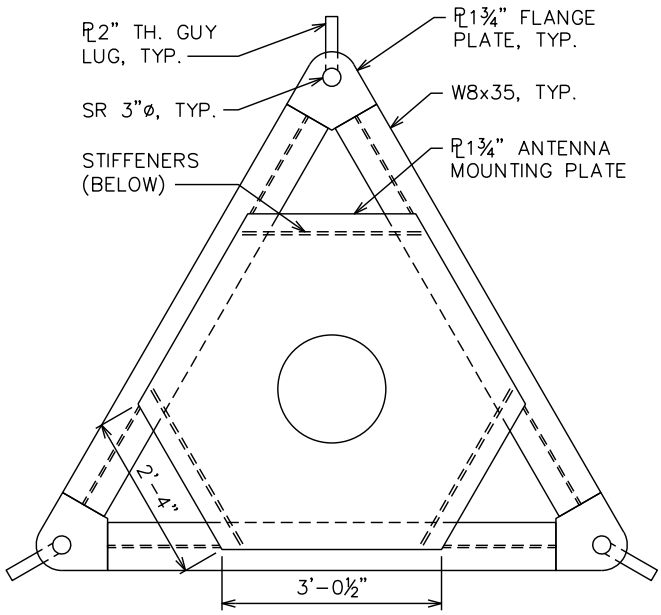


**Guy Pull-Off Plan At 997'-6" ±**

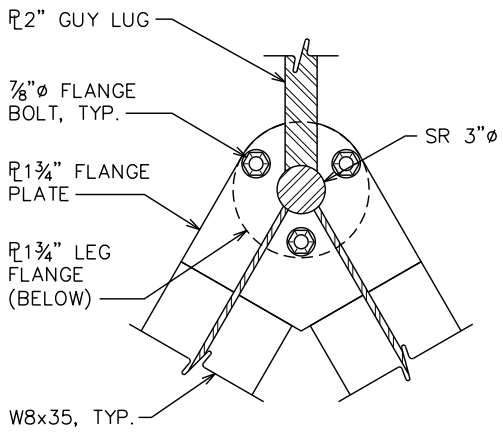


**Flange Detail**

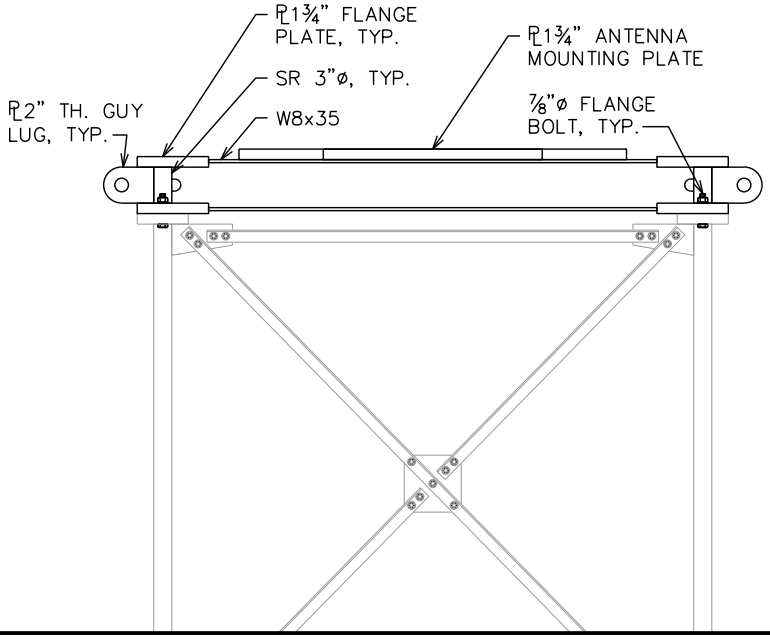


**Guy Pull-Off Elevation at 997'-0"±**

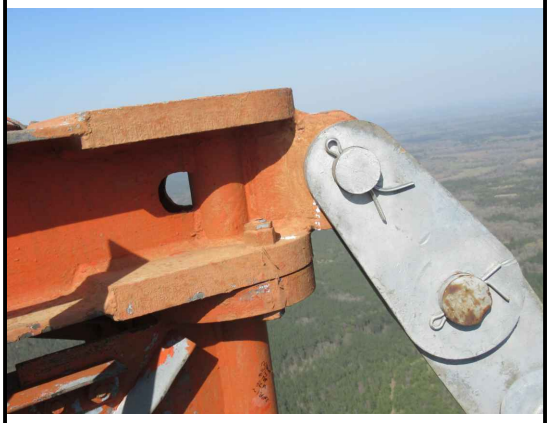

**Flange Photo**

**TOWER MAPPING**

Site Name WMAW ROSE HILL
TEP # 327679.814193
ASR # 1041037
Field Work Date 02/28/2023
Report Date 3/28/2023
Page 31 of 64

## Sub-Horizontal Brace Connection Details

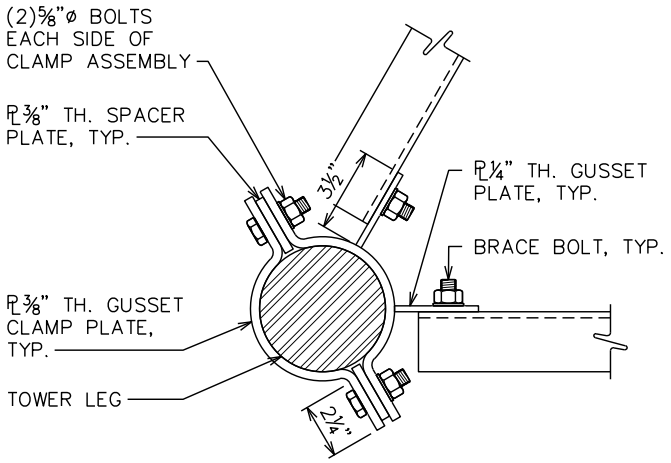


**Leg Connection Plan View**

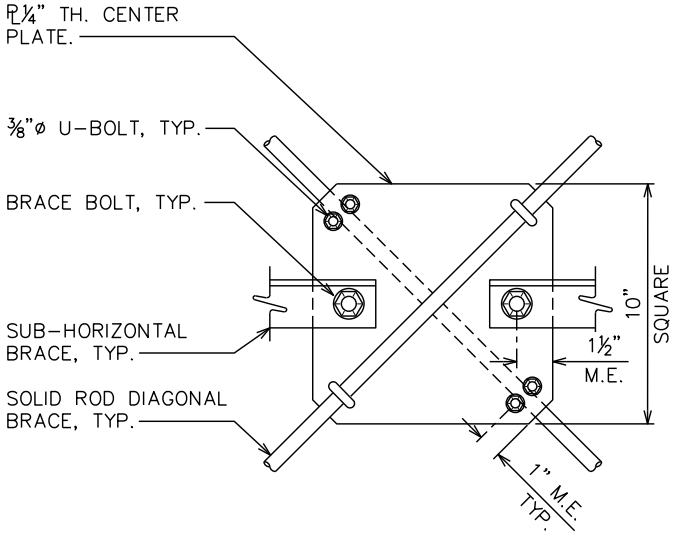


**Center Connection**

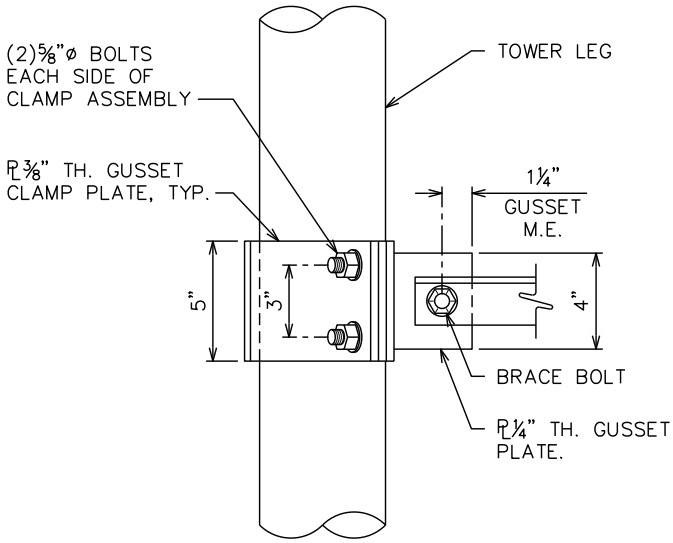


**Leg Connection Elevation**

**Leg Connection**

**Center Connection**

**TOWER MAPPING**

Site Name WMAW ROSE HILL
TEP # 327679.814193
ASR # 1041037
Field Work Date 02/28/2023
Report Date 3/28/2023
Page 32 of 64

## Leg Modification Details

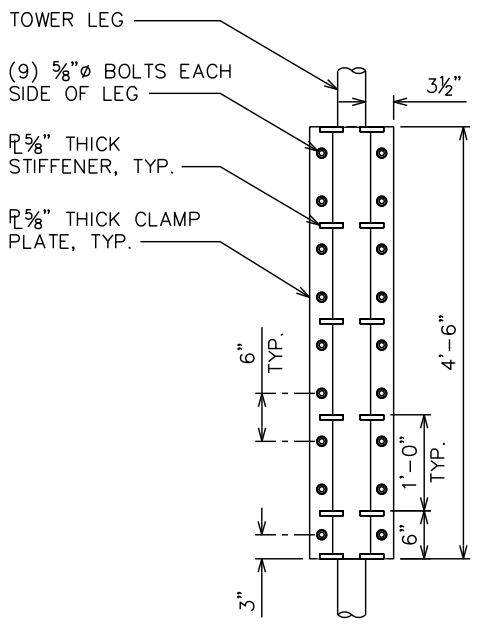


**Leg Modification Elevation View**

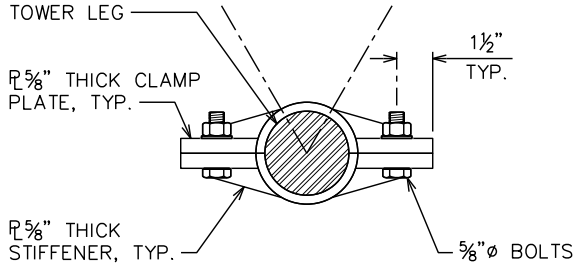


**Leg Modification Plan View**

**Photo**

**TOWER MAPPING**

Site Name WMAW ROSE HILL
TEP # 327679.814193
ASR # 1041037
Field Work Date 02/28/2023
Report Date 3/28/2023
Page 33 of 64

## GUY PULL-OFF ELEVATION

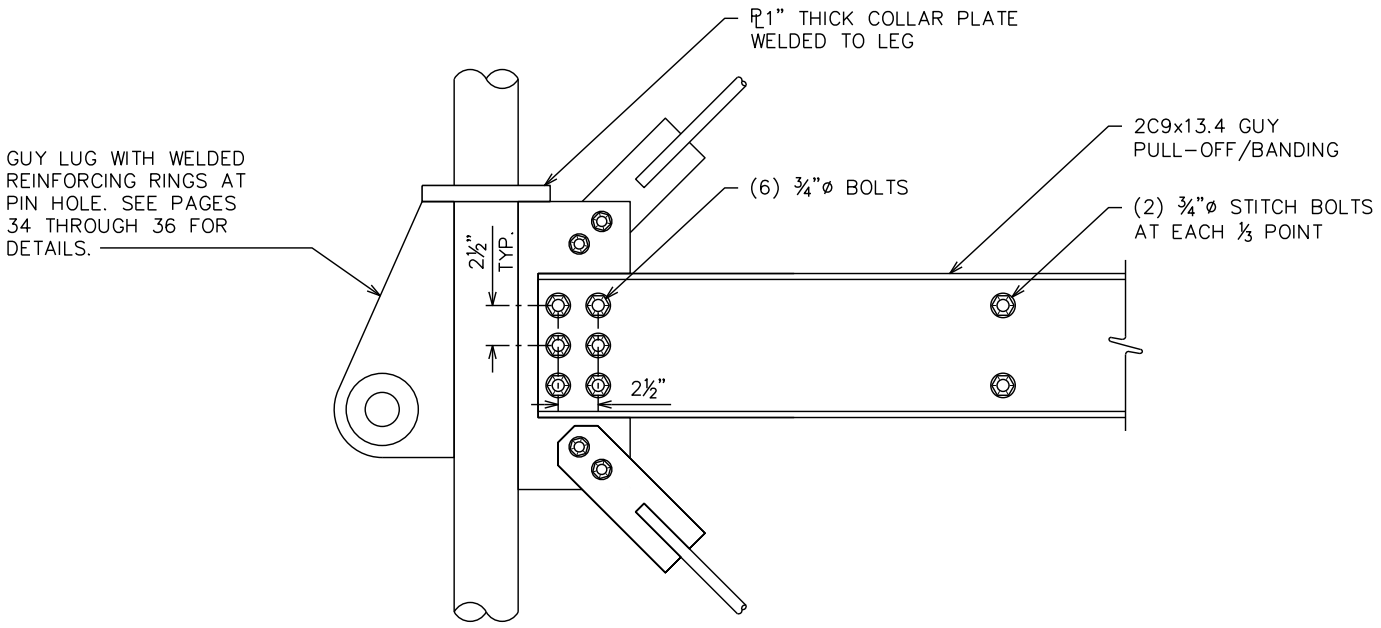


**Guy Levels 1 Through 4**

**PHOTO**

**TOWER MAPPING**

Site Name WMAW ROSE HILL
TEP # 327679.814193
ASR # 1041037
Field Work Date 02/28/2023
Report Date 3/28/2023
Page 34 of 64

## INNER ANCHOR HEAD

**Radius (A - Anchor): 285'**
**Radius (B - Anchor): 277'**
**Radius (C - Anchor): 285'**

**Anchor Relative Elev.:**
**A - Anchor: 0'**
**B - Anchor: +7'**
**C - Anchor: +2'**

**Photo**

* SEE PAGE 37 FOR LINK PLATE DETAILS.

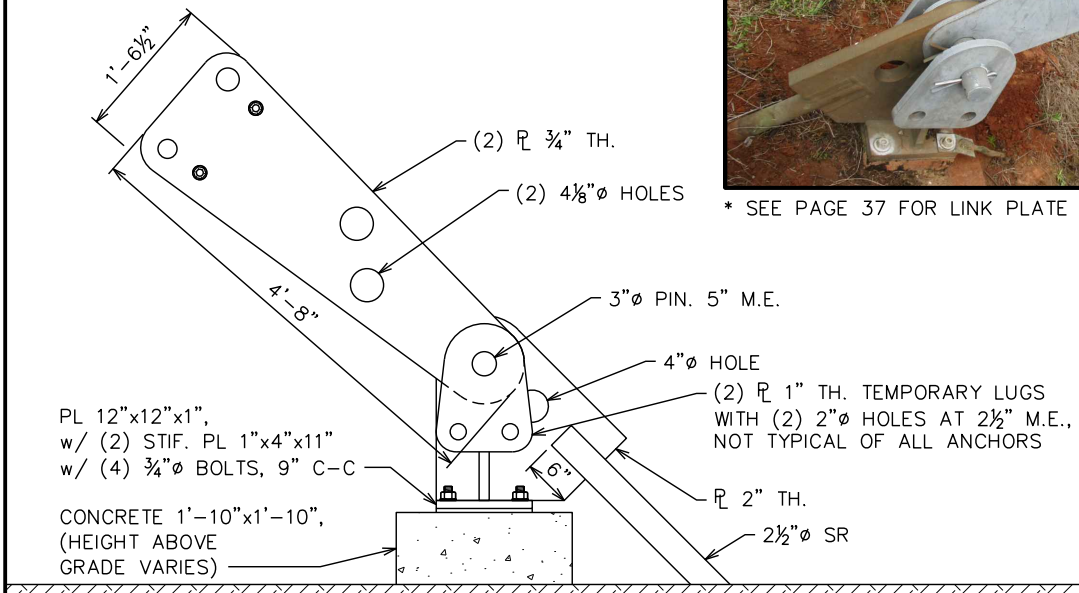


| Guy # | Guy Wire (Diameter) | Guy Wire (# of Strands) | Preform (Color) | Pin at Fan Plate (Diameter) | Pin Hole (Min. Edge) | Take-Up Device |
|---|---|---|---|---|---|---|
| 1 | 1 1/16" | CNR | N/A | 2¼" | 3½" | BRIDGE SOCKET w/ 1⅜"Ø x 6' U-BOLT |
| 2 | 1 5/16" | CNR | N/A | 2¾" | 3½" | BRIDGE SOCKET w/ 1¾"Ø x 6' U-BOLT |

| Guy # | Elevation (At Tower) | Pin at Guy Lug (Diameter) | Lug Hole (Diameter) | Lug Hole (Min. Edge) | Teardrop Guy Lug (Thickness) | Guy Lug (Connection) | Guy Banding |
|---|---|---|---|---|---|---|---|
| 1 | 187'-6" | 2¼" | CNR | CNR | PL 1" w/ (2) PL½" RINGS | WELDED | 2C9x13.4 w/ (6) ¾"Ø BOLTS |
| 2 | 382'-6" | 2¾" | CNR | CNR | PL 1¼" w/ (2) PL ¾" RINGS | WELDED | |

**TOWER MAPPING**

Site Name WMAW ROSE HILL
TEP # 327679.814193
ASR # 1041037
Field Work Date 02/28/2023
Report Date 3/28/2023
Page 35 of 64

## MIDDLE ANCHOR HEAD

**Radius (A - Anchor): 688'**
**Radius (B - Anchor): 687'**
**Radius (C - Anchor): 684'**

**Anchor Relative Elev.:**
**A - Anchor: -17'**
**B - Anchor: -14'**
**C - Anchor: -23'**

**Photo**

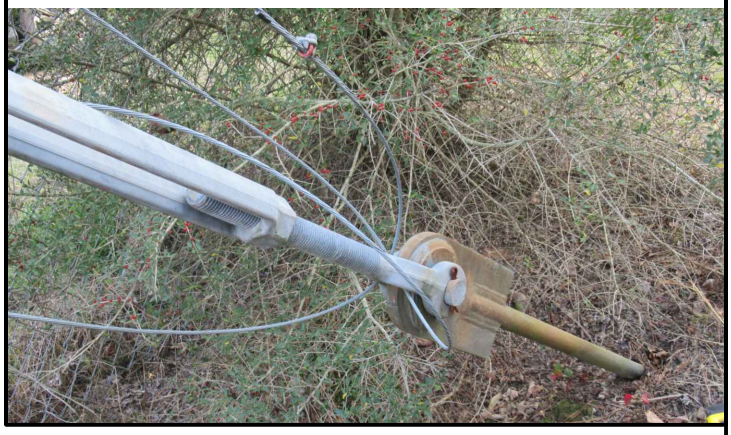

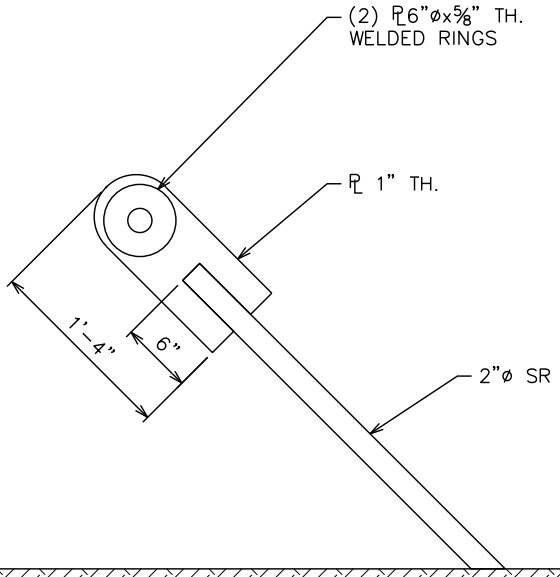


| Guy # | Guy Wire (Diameter) | Guy Wire (# of Strands) | Preform (Color) | Pin (Diameter) | Pin Hole (Min. Edge) | Take-Up Device |
|---|---|---|---|---|---|---|
| 3 | 1 3/16 | CNR | N/A | 2" | 4" | J-E TURNBUCKLE 2"x24" |

| Guy # | Elevation (At Tower) | Strand Socket (Pin Diameter) | Lug Hole (Diameter) | Lug Hole (Min. Edge) | Teardrop Guy Lug (Thickness) | Guy Lug (Connection) | Guy Banding |
|---|---|---|---|---|---|---|---|
| 3 | 585'-0" | 2 1/2" | CNR | CNR | PL 1 1/4" w/ (2) PL 1/2" RINGS | WELDED | 2C9x13.4 w/ (6) 3/4"Ø BOLTS |

**TOWER MAPPING**

Site Name WMAW ROSE HILL
TEP # 327679.814193
ASR # 1041037
Field Work Date 02/28/2023
Report Date 3/28/2023
Page 36 of 64

## OUTER ANCHOR HEAD

**Radius (A - Anchor): 717'**
**Radius (B - Anchor): 718'**
**Radius (C - Anchor): 719'**

**Anchor Relative Elev.:**
**A - Anchor: -22'**
**B - Anchor: -16'**
**C - Anchor: -19'**

**Photo**

* SEE PAGE 37 FOR LINK PLATE DETAILS.

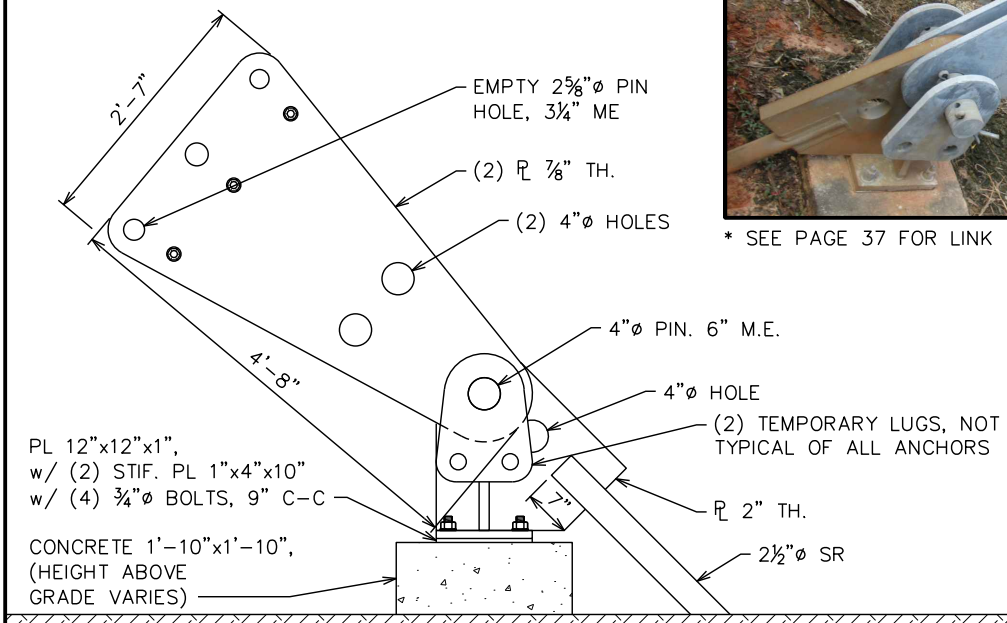


| Guy # | Guy Wire (Diameter) | Guy Wire (# of Strands) | Preform (Color) | Pin at Fan Plate (Diameter) | Pin Hole (Min. Edge) | Take-Up Device |
|---|---|---|---|---|---|---|
| 4 | 1¼" | CNR | N/A | 2¾" | 3¼" | BRIDGE SOCKET w/ 1⅝"Ø x 6' U-BOLT |
| 5 | 1⅛" | CNR | N/A | 2¼" | 3¼" | J-E TURNBUCKLE 2"x24" |

| Guy # | Elevation (At Tower) | Pin at Guy Lug (Pin Diameter) | Lug Hole (Diameter) | Lug Hole (Min. Edge) | Teardrop Guy Lug (Thickness) | Guy Lug (Connection) | Guy Banding |
|---|---|---|---|---|---|---|---|
| 4 | 787'-6" | 2¾" | CNR | CNR | PL 1¼" w/ (2) PL¾" RINGS | WELDED | 2C9x13.4 w/ (6) ¾"Ø BOLTS |
| 5 | 997'-0" | 2¼" | CNR | CNR | PL2" | WELDED | W8x35 (WELDED) |

## GUY LINK PLATES AT ANCHOR HEAD

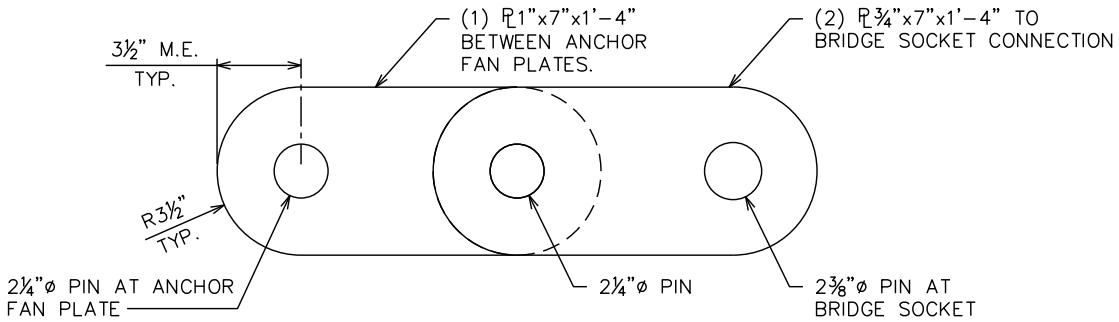


**Guy #1 Link Plates at Anchor Head**

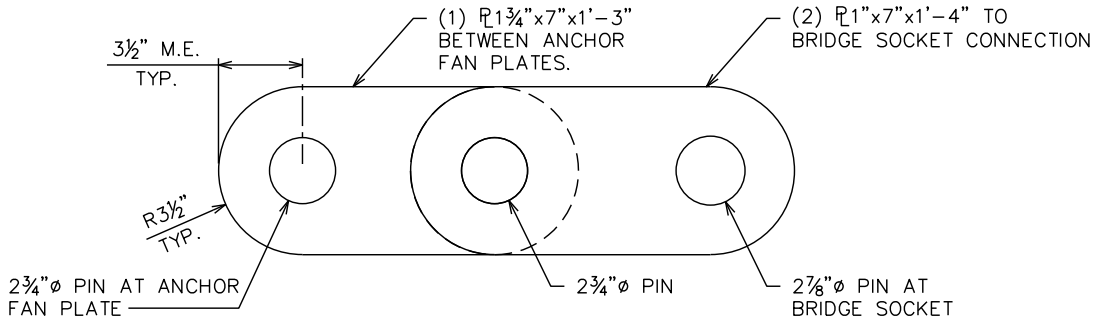


**Guy #2 Link Plates at Anchor Head**

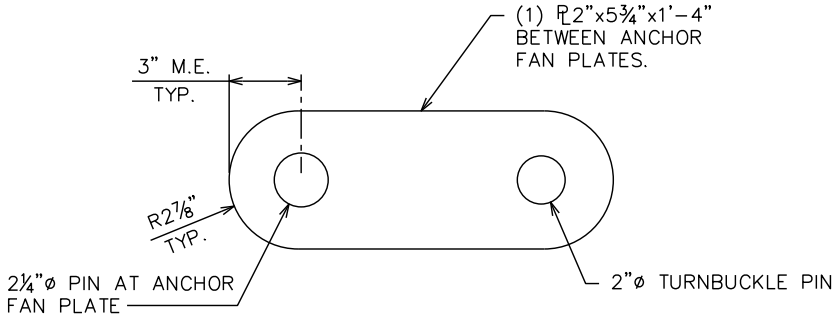


**Guy #5 Link Plate at Anchor Head**

**TOWER MAPPING**

Site Name WMAW ROSE HILL
TEP # 327679.814193
ASR # 1041037
Field Work Date 02/28/2023
Report Date 3/28/2023
Page 38 of 64

## TRANSMISSION CABLES

**A-Leg = 0°±**

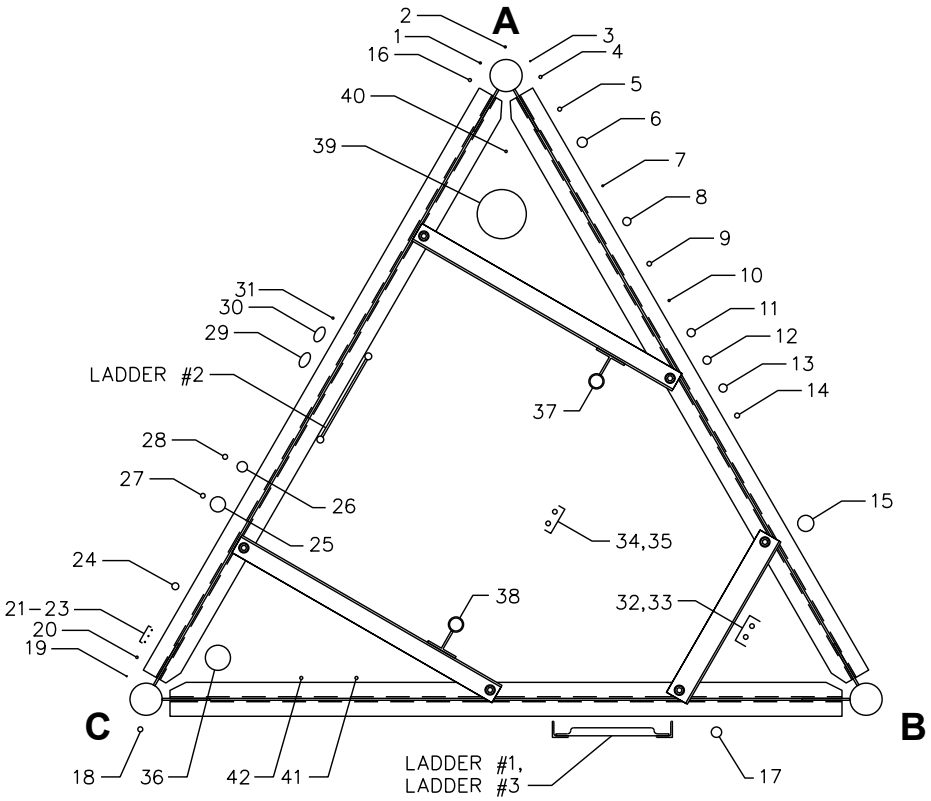


| Coax # | Type | Size | Height | Antenna | Carrier | Notes |
|---|---|---|---|---|---|---|
| 1 | SM | 1/4" | 93' | - | - | CUT AT TOP |
| 2 | SM | 1/4" | 81' | - | - | CUT AT TOP |
| 3 | SM | 1/8" | 196' | 4 | - | - |
| 4 | SM | 3/8" | 196' | 4 | - | - |
| 5 | SM | 1/2" | 196' | 4 | - | CUT AT BASE |
| 6 | MC | 1 1/4" | 800' | - | - | CONDUIT |
| 7 | SM | 1/4" | 758' | - | - | CUT AT TOP |
| 8 | FH | 7/8" | 384' | 8 | - | - |
| 9 | FH | 1/2" | 496' | 11-12 | - | CUT AT BASE |
| 10 | SM | 1/4" | 517' | - | - | CUT AT TOP |
| 11 | FH | 7/8" | 392' | 9 | - | - |
| 12 | FH | 7/8" | 511' | 13 | - | - |
| 13 | FH | 7/8" | 697' | 15 | - | - |
| 14 | SM | 5/8" | 762' | - | - | CUT AT TOP |
| 15 | FH | 1 5/8" | 616' | 14 | - | - |
| 16 | SM | 3/8" | 798' | - | - | - |
| 17 | MC | 1 5/16" | 21' | - | - | CONDUIT TO ELEVATOR |

## TRANSMISSION CABLES (CONTINUED)

| Coax # | Type | Size | Height | Antenna | Carrier | Notes |
|---|---|---|---|---|---|---|
| 18 | SM | 5/8" | 34' | 2 | - | COMPOUND LIGHT |
| 19 | SM | 5/32" | 256' | - | - | CUT AT BASE |
| 20 | SM | 5/16" | 267' | - | - | CONDUIT BOX |
| 21 | SM | 1/8" | 200' | - | - | |
| 22 | SM | 1/8" | 120' | - | - | |
| 23 | SM | 1/8" | 267' | - | - | |
| 24 | MC | 7/8" | 986' | - | - | CONDUIT |
| 25 | MC | 1.9" | 988' | - | - | CONDUIT |
| 26 | MC | 1 5/16" | 987' | - | - | CONDUIT |
| 27 | FH | 1/2" | 464' | - | - | CUT AT TOP |
| 28 | SM | 5/8" | 320' | - | - | TOWER LIGHTING |
| 29 | EW | 63 | 331' | 6 | - | - |
| 30 | EW | 63 | 370' | 7 | - | - |
| 31 | SM | 1/4" | 215' | 5 | - | CUT AT BASE |
| 32 | WIRE ROPE | 9/16" | 983' | - | - | ELEVATOR CABLES |
| 33 | WIRE ROPE | 9/16" | 983' | - | - | |
| 34 | WIRE ROPE | 9/16" | 983' | - | - | |
| 35 | WIRE ROPE | 9/16" | 983' | - | - | |
| 36 | RIGID | 3 1/8" | 876' | 20 | WMAW-FM | - |
| 37 | PIPE | 1.9" | 983' | - | - | ELEVATOR GUIDE RAILS |
| 38 | PIPE | 1.9" | 983' | - | - | |
| 39 | RIGID | 6 1/8" | 995' | 21 | WMAW-TV | (4) RIGID JUMPERS TO ANT. |
| 40 | SM | 5/16" | 32' | 1 | - | WEATHER EQUIPMENT |
| 41 | SM | 3/8" | 764'-800' | - | - | CUT |
| 42 | SM | 3/8" | 764'-800' | - | - | CUT |

**TOWER MAPPING**

Site Name WMAW ROSE HILL
TEP # 327679.814193
ASR # 1041037
Field Work Date 02/28/2023
Report Date 3/28/2023


## LADDER DETAILS

### Climbing Ladder #1 & #3 Sketch

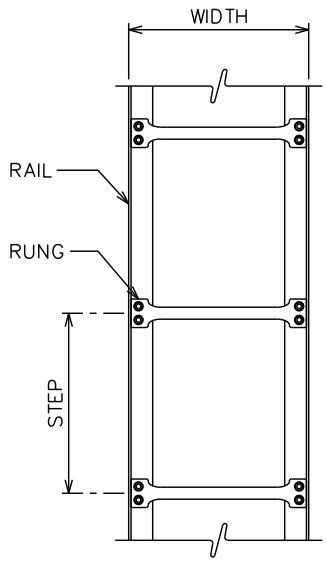


### Climbing Ladder #1 & #3 Photo

### Climbing Ladder #2 Sketch

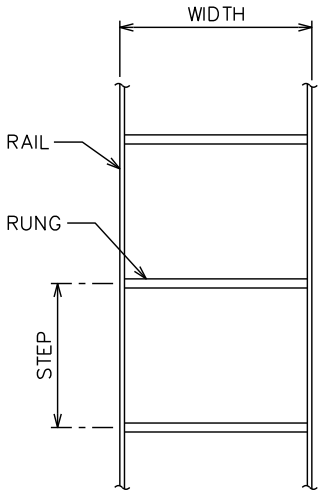


### Climbing Ladder #2 Photo

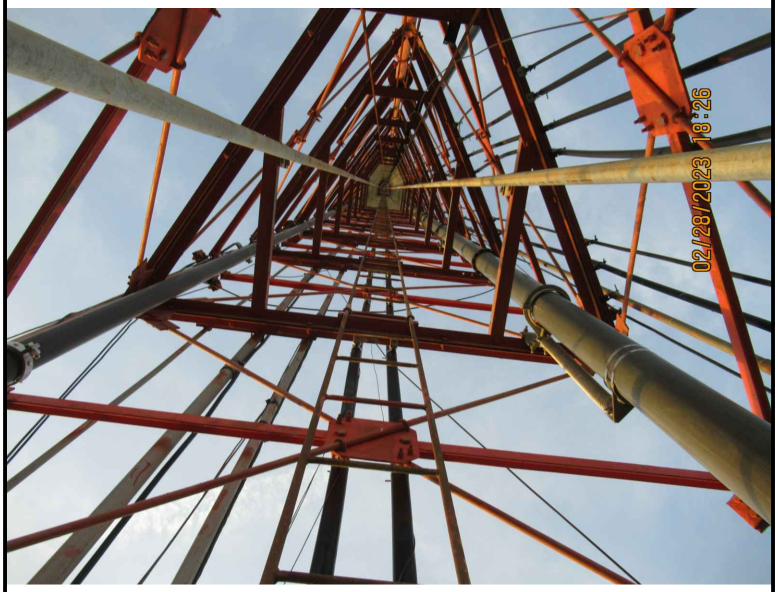


| Description | # | Height | Width | Step | Rail (type & size) | Rung (type & size) | Safety (type & size) |
|---|---|---|---|---|---|---|---|
| LADDER | 1 | 1' - 23' | 15" | 15" | L1½x2x3/16" | 1"Ø ROLLED PLATE | NA |
| LADDER | 2 | 15' - 990' | 12" | 15" | ¾"Ø SR | ⅝"Ø SR | NA |
| LADDER | 3 | 983' - 998' | 15" | 15" | L1½x2x3/16" | 1"Ø ROLLED PLATE | NA |

**TOWER MAPPING**

Site Name WMAW ROSE HILL
TEP # 327679.814193
ASR # 1041037
Field Work Date 02/28/2023
Report Date 3/28/2023
Page 41 of 64

TOWER ENGINEERING PROFESSIONALS

**Carrier** UNKNOWN

## ANTENNA AND MOUNT SKETCH

**Front/Side Elevation**

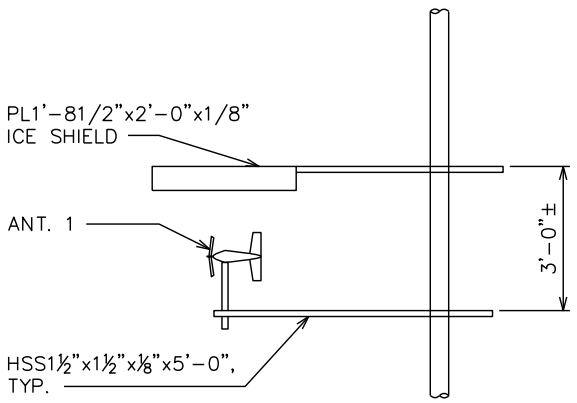


**Plan View**

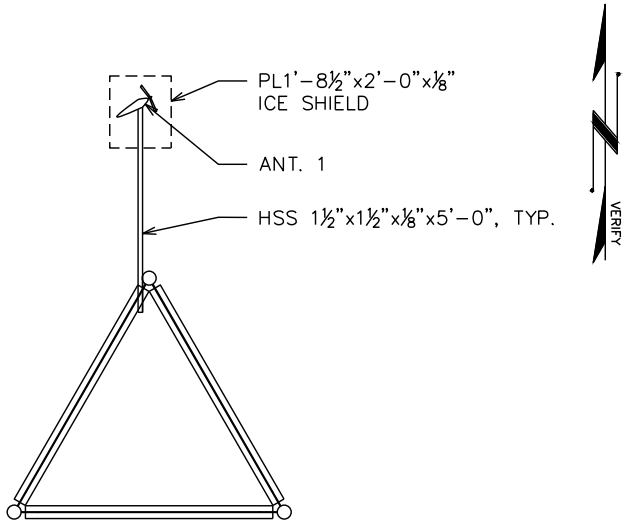


| Antenna # | Mount Elevation | Antenna Elevation | Mount Type | Leg | Azimuth |
|---|---|---|---|---|---|
| 1 | 31' | 32' | STANDOFF | A | 0° |

| Antenna Manufacturer | Antenna Model # | TMA (#) / Model # | (Coax Quantity) Size |
|---|---|---|---|
| -- | WEATHER EQUIPMENT | -- | (1) 5/16" |

**Photo**

**TOWER MAPPING**

Site Name WMAW ROSE HILL
TEP # 327679.814193
ASR # 1041037
Field Work Date 02/28/2023
Report Date 3/28/2023
Page 42 of 64

TOWER ENGINEERING PROFESSIONALS

**Carrier** UNKNOWN

## ANTENNA AND MOUNT SKETCH

**Front/Side Elevation**

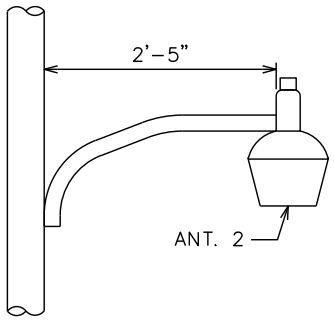


**Plan View**

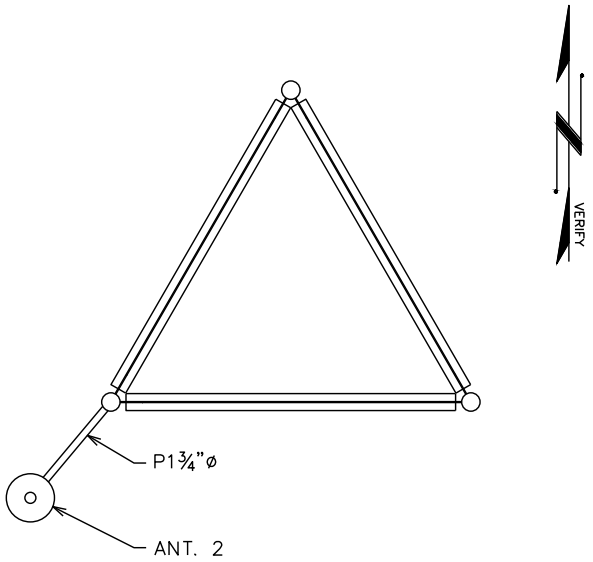


| Antenna # | Mount Elevation | Antenna Elevation | Mount Type | Leg | Azimuth |
|---|---|---|---|---|---|
| 2 | 34' | 34' | STANDOFF | C | 220° |

| Antenna Manufacturer | Antenna Model # | TMA (#) / Model # | (Coax Quantity) Size |
|---|---|---|---|
| -- | COMPOUND LIGHT | -- | (1) ⅝" |

**Photo**

**TOWER MAPPING**

Site Name WMAW ROSE HILL
TEP # 327679.814193
ASR # 1041037
Field Work Date 02/28/2023
Report Date 3/28/2023
Page 43 of 64

TOWER ENGINEERING PROFESSIONALS

**Carrier** UNKNOWN

## ANTENNA AND MOUNT SKETCH

**Front/Side Elevation**

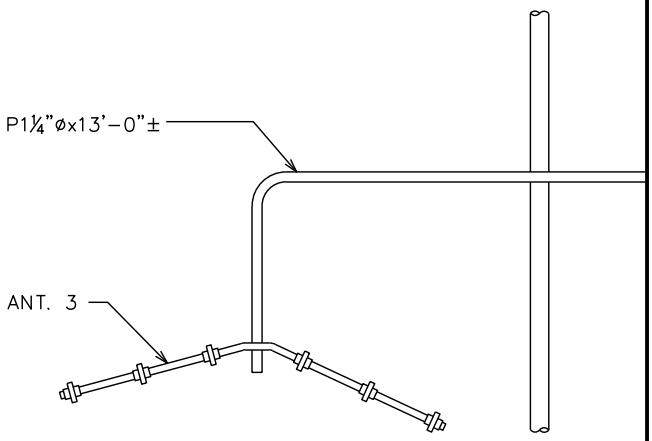


**Plan View**

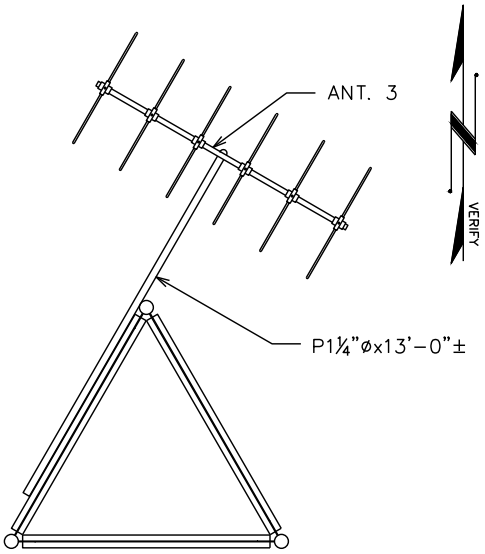


| Antenna # | Mount Elevation | Antenna Elevation | Mount Type | Leg | Azimuth |
|---|---|---|---|---|---|
| 3 | 132' | 129' | STANDOFF | A | - |

| Antenna Manufacturer | Antenna Model # | TMA (#) / Model # | (Coax Quantity) Size |
|---|---|---|---|
| -- | DAMAGED 6 ELEMENT YAGI | -- | -- |

**Photo**

**TOWER MAPPING**

Site Name WMAW ROSE HILL
TEP # 327679.814193
ASR # 1041037
Field Work Date 02/28/2023
Report Date 3/28/2023
Page 44 of 64

TOWER ENGINEERING PROFESSIONALS

**Carrier** UNKNOWN

## ANTENNA AND MOUNT SKETCH

### Front/Side Elevation

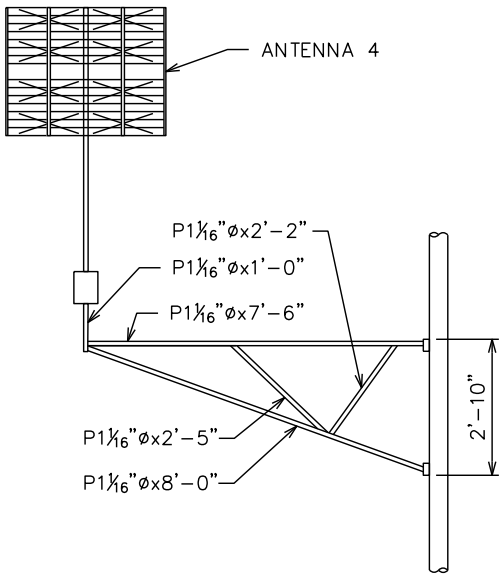


### Plan View

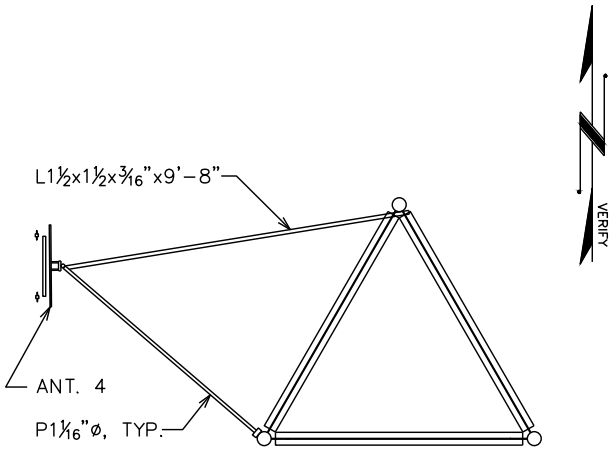


| Antenna # | Mount Elevation | Antenna Elevation | Mount Type | Leg | Azimuth |
|---|---|---|---|---|---|
| 4 | 190' | 196' | STANDOFF | C-LEG | 270° |

| Antenna Manufacturer | Antenna Model # | TMA (#) / Model # | (Coax Quantity) Size |
|---|---|---|---|
| UNKNOWN | 40"x32" GRID PANEL | -- | (1) 1/8"<br>(1) 3/8"<br>(1) 1/2" |

### Photo

**TOWER MAPPING**

Site Name WMAW ROSE HILL
TEP # 327679.814193
ASR # 1041037
Field Work Date 02/28/2023
Report Date 3/28/2023
Page 45 of 64

TOWER ENGINEERING PROFESSIONALS

**Carrier** UNKNOWN

## ANTENNA AND MOUNT SKETCH

**Front/Side Elevation**

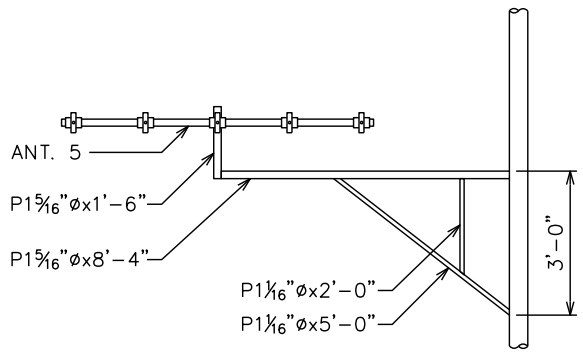


**Plan View**

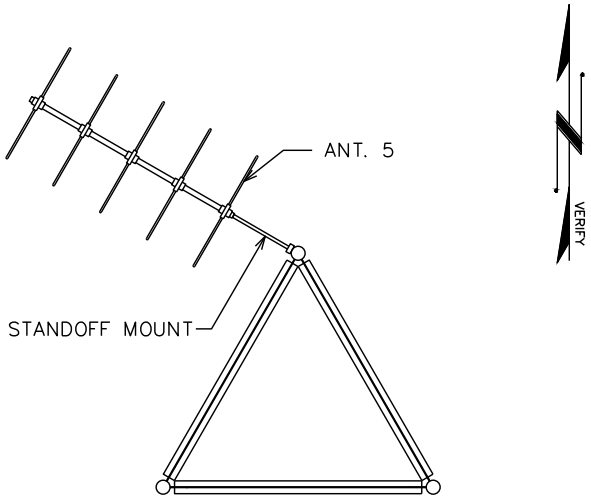


| Antenna # | Mount Elevation | Antenna Elevation | Mount Type | Leg | Azimuth |
|---|---|---|---|---|---|
| 5 | 213' | 215' | STANDOFF | A | 300° |

| Antenna Manufacturer | Antenna Model # | TMA (#) / Model # | (Coax Quantity) Size |
|---|---|---|---|
| UNKNOWN | DAMAGED 10', 5 ELEMENT YAGI | -- | (1) 1/4" |

**Photo**

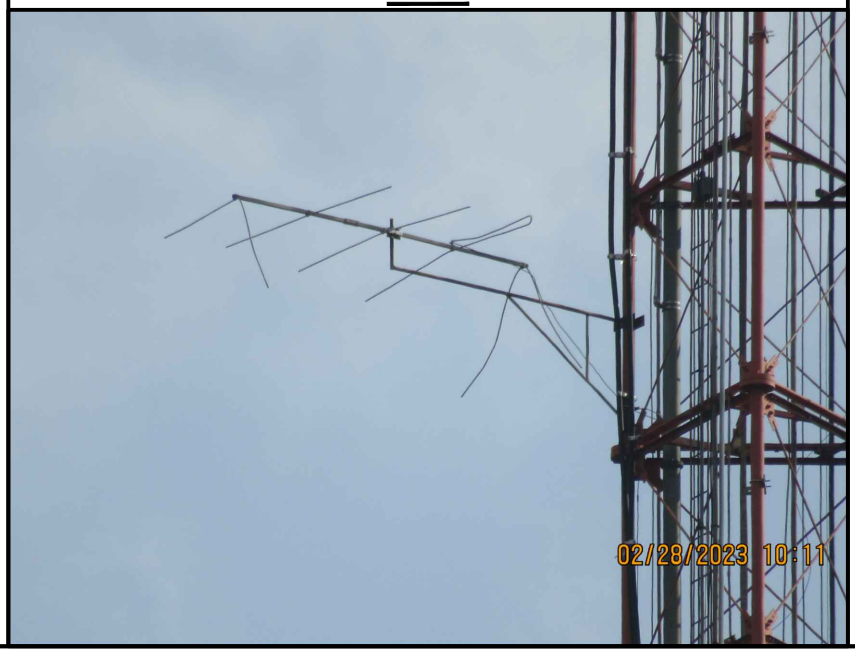

**TOWER MAPPING**

Site Name WMAW ROSE HILL
TEP # 327679.814193
ASR # 1041037
Field Work Date 02/28/2023
Report Date 3/28/2023
Page 46 of 64

TOWER ENGINEERING PROFESSIONALS

**Carrier** UNKNOWN

## ANTENNA AND MOUNT SKETCH

**Front/Side Elevation**

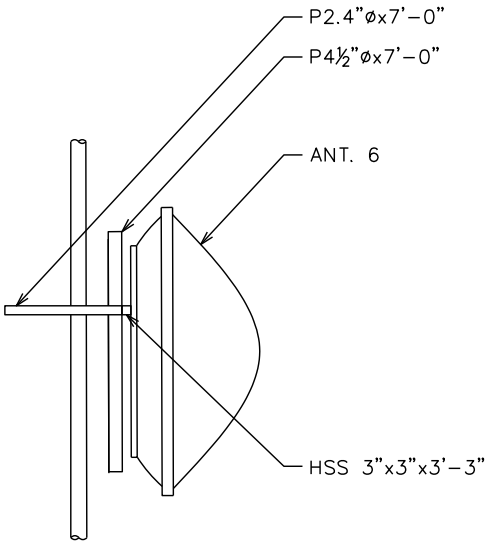


**Plan View**

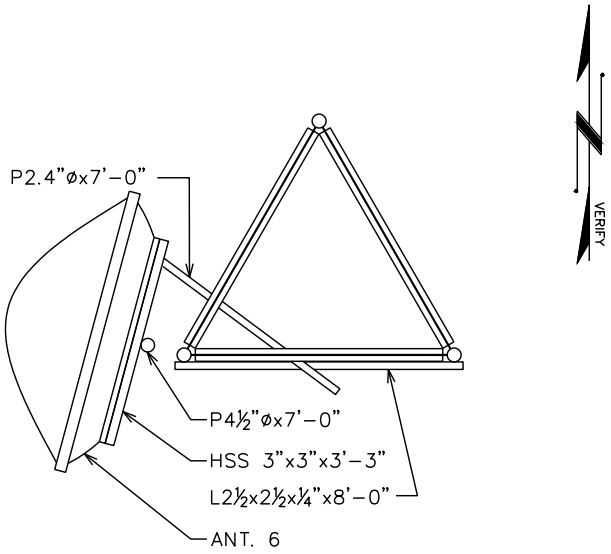


| Antenna # | Mount Elevation | Antenna Elevation | Mount Type | Leg | Azimuth |
|---|---|---|---|---|---|
| 6 | 331' | 331' | PIPE | C | 285° |

| Antenna Manufacturer | Antenna Model # | TMA (#) / Model # | (Coax Quantity) Size |
|---|---|---|---|
| RFS | 8'Ø DISH w/ RADOME | -- | (1) EW63 |

**Photo**

**TOWER MAPPING**

Site Name WMAW ROSE HILL
TEP # 327679.814193
ASR # 1041037
Field Work Date 02/28/2023
Report Date 3/28/2023
Page 47 of 64

TOWER ENGINEERING PROFESSIONALS

**Carrier** UNKNOWN

## ANTENNA AND MOUNT SKETCH

**Front/Side Elevation**

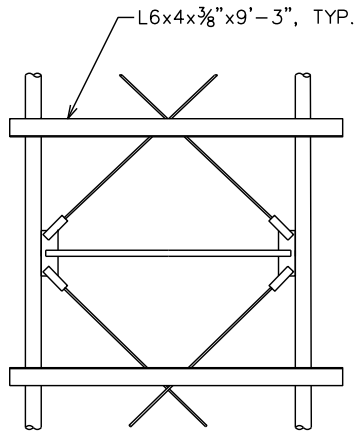


**Plan View**

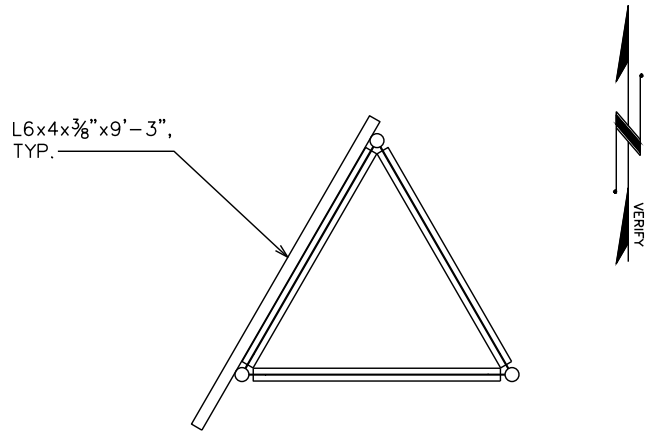


| Antenna # | Mount Elevation | Antenna Elevation | Mount Type | Leg | Azimuth |
|---|---|---|---|---|---|
| -- | 342', 348' | -- | -- | -- | -- |

| Antenna Manufacturer | Antenna Model # | TMA (#) / Model # | (Coax Quantity) Size |
|---|---|---|---|
| -- | EMPTY MOUNT ANGLES | -- | -- |

**Photo**

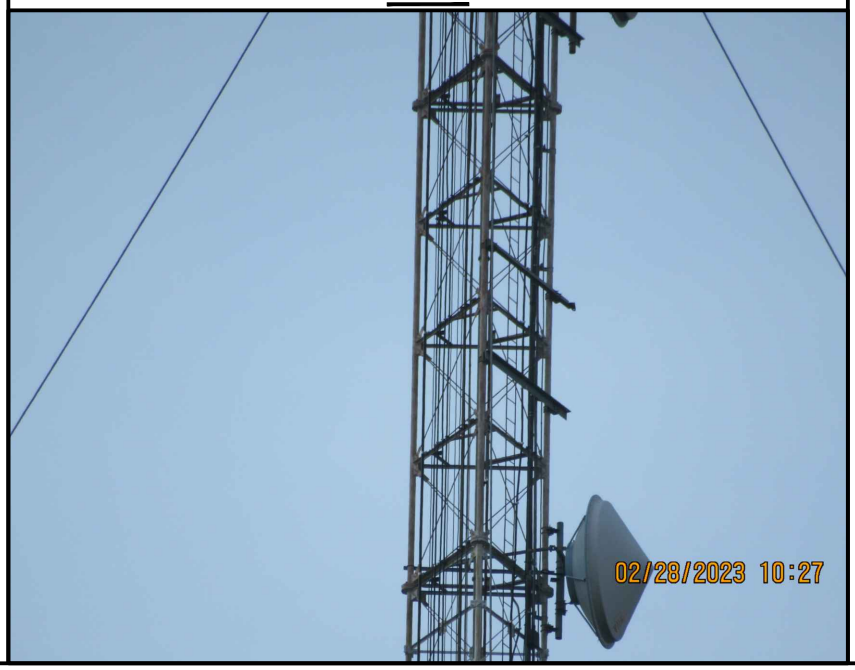

**TOWER MAPPING**

Site Name WMAW ROSE HILL
TEP # 327679.814193
ASR # 1041037
Field Work Date 02/28/2023
Report Date 3/28/2023
Page 48 of 64

TOWER ENGINEERING PROFESSIONALS

**Carrier** UNKNOWN

## ANTENNA AND MOUNT SKETCH

**Front/Side Elevation**

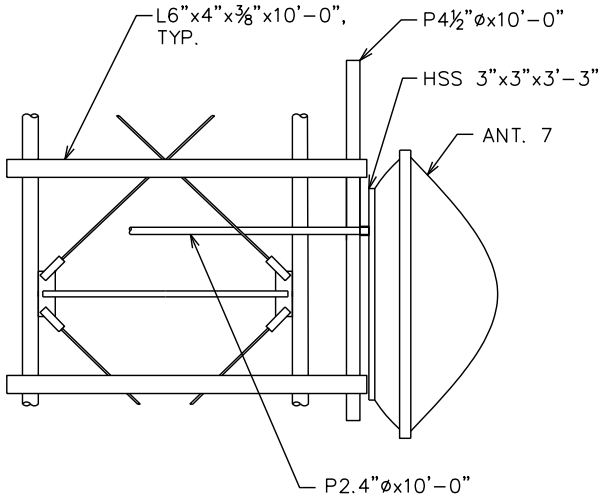


**Plan View**

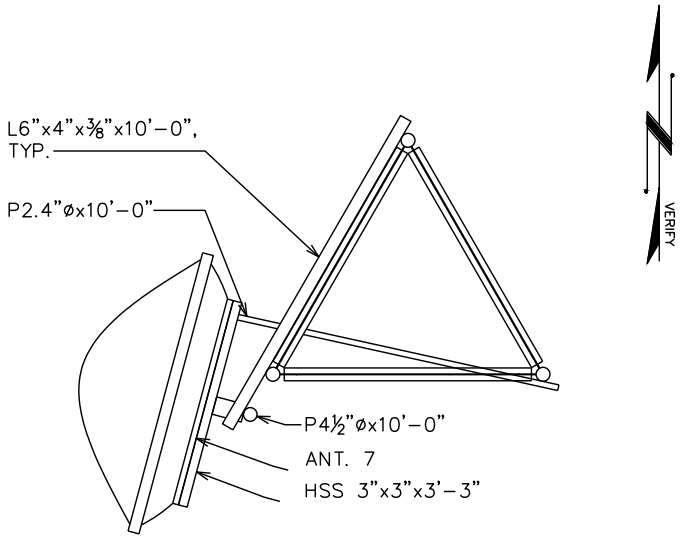


| Antenna # | Mount Elevation | Antenna Elevation | Mount Type | Leg | Azimuth |
|---|---|---|---|---|---|
| 7 | 370' | 370' | PIPE | C | 285° |

| Antenna Manufacturer | Antenna Model # | TMA (#) / Model # | (Coax Quantity) Size |
|---|---|---|---|
| RFS | 8'Ø DISH w/ RADOME | -- | (1) EW63 |

**Photo**

TOWER ENGINEERING PROFESSIONALS

**Carrier** UNKNOWN

**TOWER MAPPING**

Site Name WMAW ROSE HILL
TEP # 327679.814193
ASR # 1041037
Field Work Date 02/28/2023
Report Date 3/28/2023
Page 49 of 64

## ANTENNA AND MOUNT SKETCH

**Front/Side Elevation**

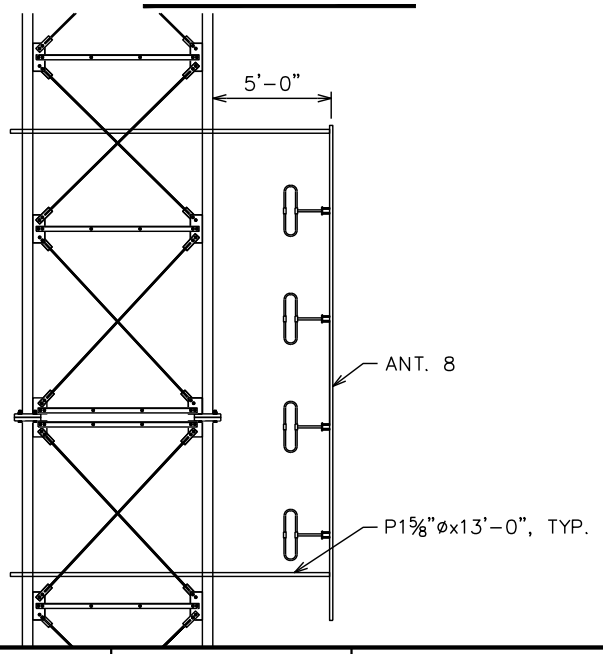


**Plan View**

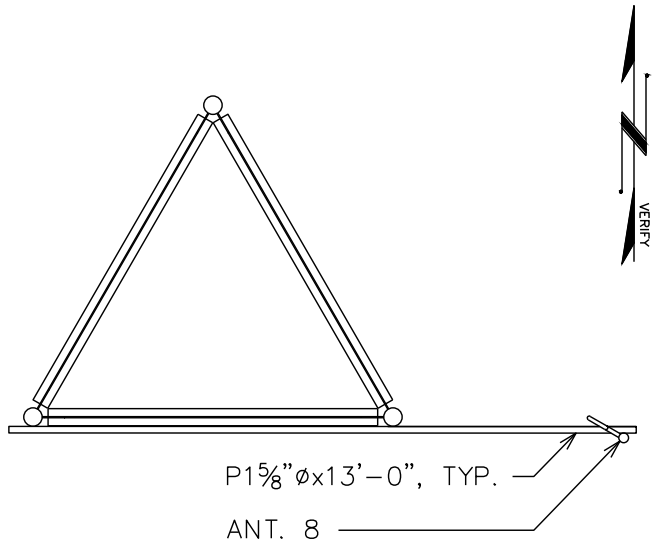


| Antenna # | Mount Elevation | Antenna Elevation | Mount Type | Leg | Azimuth |
|---|---|---|---|---|---|
| 8 | 384', 402' | 392' | STANDOFF | B | 300° |

| Antenna Manufacturer | Antenna Model # | TMA (#) / Model # | (Coax Quantity) Size |
|---|---|---|---|
| UNKNOWN | 20', 4 ELEMENT DIPOLE | -- | (1) ⅞" |

**Photo**

**TOWER MAPPING**

Site Name WMAW ROSE HILL
TEP # 327679.814193
ASR # 1041037
Field Work Date 02/28/2023
Report Date 3/28/2023
Page 50 of 64

TOWER ENGINEERING PROFESSIONALS

**Carrier** UNKNOWN

## ANTENNA AND MOUNT SKETCH

**Front/Side Elevation**

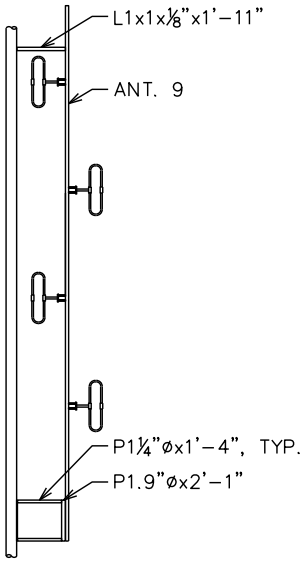


**Plan View**

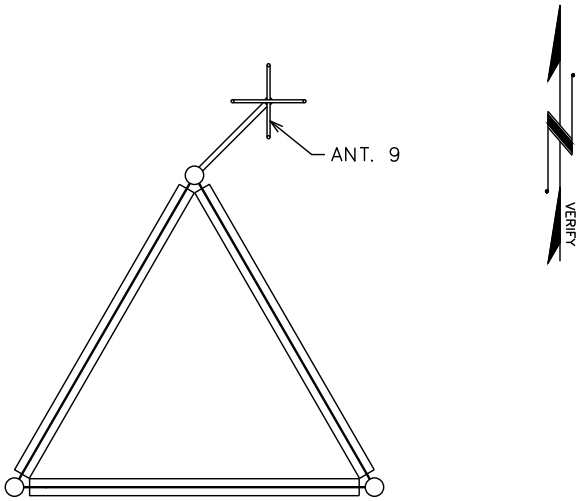


| Antenna # | Mount Elevation | Antenna Elevation | Mount Type | Leg | Azimuth |
|---|---|---|---|---|---|
| 9 | 392' | 402' | STANDOFF | A | 45° |

| Antenna Manufacturer | Antenna Model # | TMA (#) / Model # | (Coax Quantity) Size |
|---|---|---|---|
| UNKNOWN | 21', 4 ELEMENT DIPOLE | -- | (1) ⅞" |

**Photo**

**TOWER MAPPING**

Site Name WMAW ROSE HILL
TEP # 327679.814193
ASR # 1041037
Field Work Date 02/28/2023
Report Date 3/28/2023
Page 51 of 64

TOWER ENGINEERING PROFESSIONALS

**Carrier** UNKNOWN

## ANTENNA AND MOUNT SKETCH

**Front/Side Elevation**

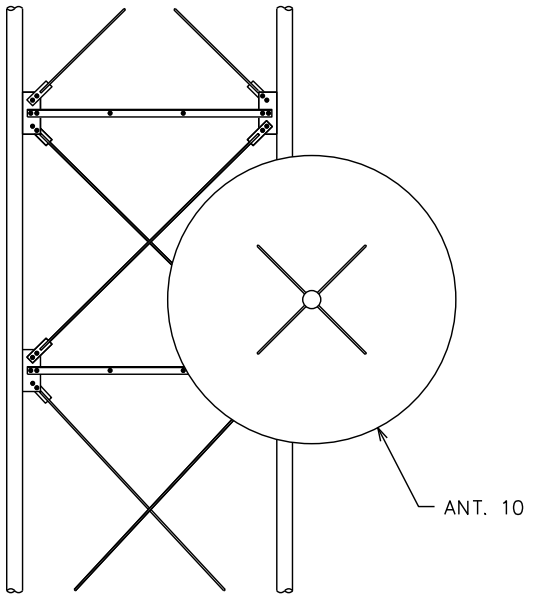


**Plan View**

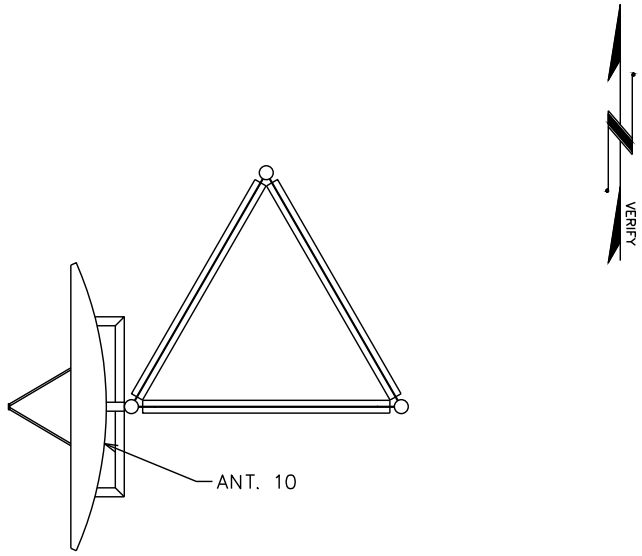


| Antenna # | Mount Elevation | Antenna Elevation | Mount Type | Leg | Azimuth |
|---|---|---|---|---|---|
| 10 | 465' | 465' | DIRECT | C | 270° |

| Antenna Manufacturer | Antenna Model # | TMA (#) / Model # | (Coax Quantity) Size |
|---|---|---|---|
| UNKNOWN | 8'Ø DISH | -- | -- |

**Photo**

**TOWER MAPPING**

Site Name WMAW ROSE HILL
TEP # 327679.814193
ASR # 1041037
Field Work Date 02/28/2023
Report Date 3/28/2023
Page 52 of 64

TOWER ENGINEERING PROFESSIONALS

**Carrier** UNKNOWN

## ANTENNA AND MOUNT SKETCH

**Front/Side Elevation**

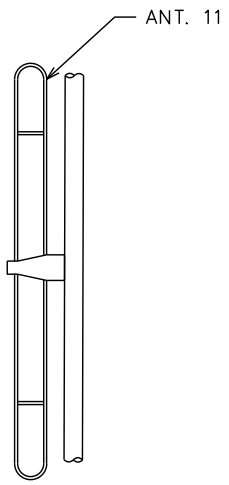


**Plan View**

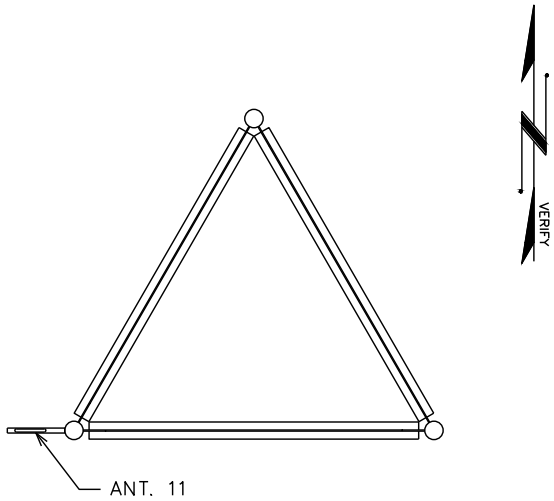


| Antenna # | Mount Elevation | Antenna Elevation | Mount Type | Leg | Azimuth |
|---|---|---|---|---|---|
| 11 | 482' | 482' | DIRECT | C | 270° |

| Antenna Manufacturer | Antenna Model # | TMA (#) / Model # | (Coax Quantity) Size |
|---|---|---|---|
| UNKNOWN | 10', 1 ELEMENT DIPOLE | -- | (1) ½" |

**Photo**

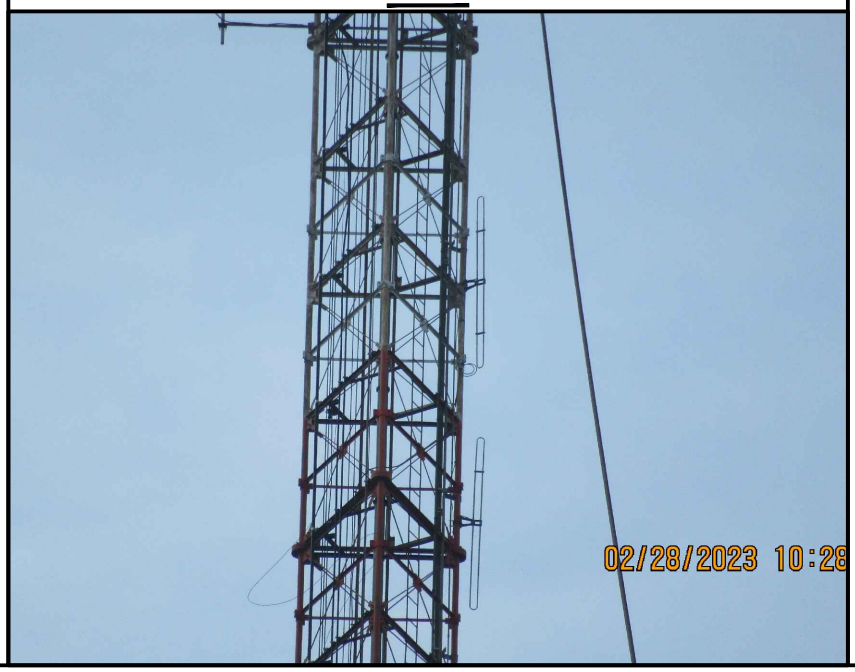

**TOWER MAPPING**

Site Name WMAW ROSE HILL
TEP # 327679.814193
ASR # 1041037
Field Work Date 02/28/2023
Report Date 3/28/2023
Page 53 of 64

TOWER ENGINEERING PROFESSIONALS

**Carrier** UNKNOWN

## ANTENNA AND MOUNT SKETCH

**Front/Side Elevation**

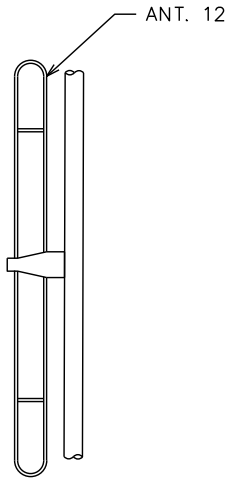


**Plan View**

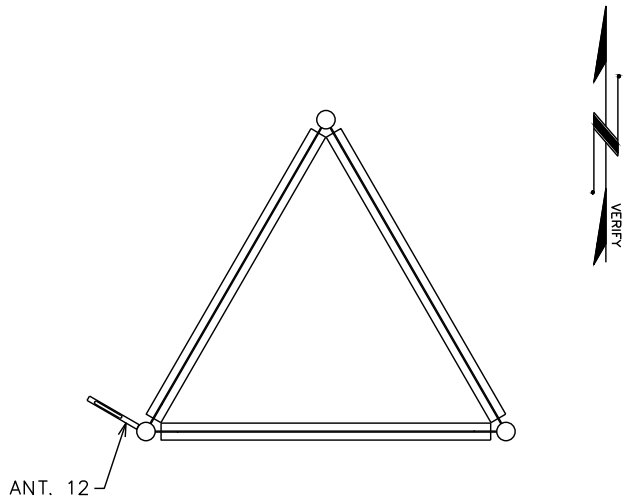


| Antenna # | Mount Elevation | Antenna Elevation | Mount Type | Leg | Azimuth |
|---|---|---|---|---|---|
| 12 | 496' | 496' | DIRECT | C | 300° |

| Antenna Manufacturer | Antenna Model # | TMA (#) / Model # | (Coax Quantity) Size |
|---|---|---|---|
| UNKNOWN | 10', 1 ELEMENT DIPOLE | -- | (1) ½" |

**Photo**

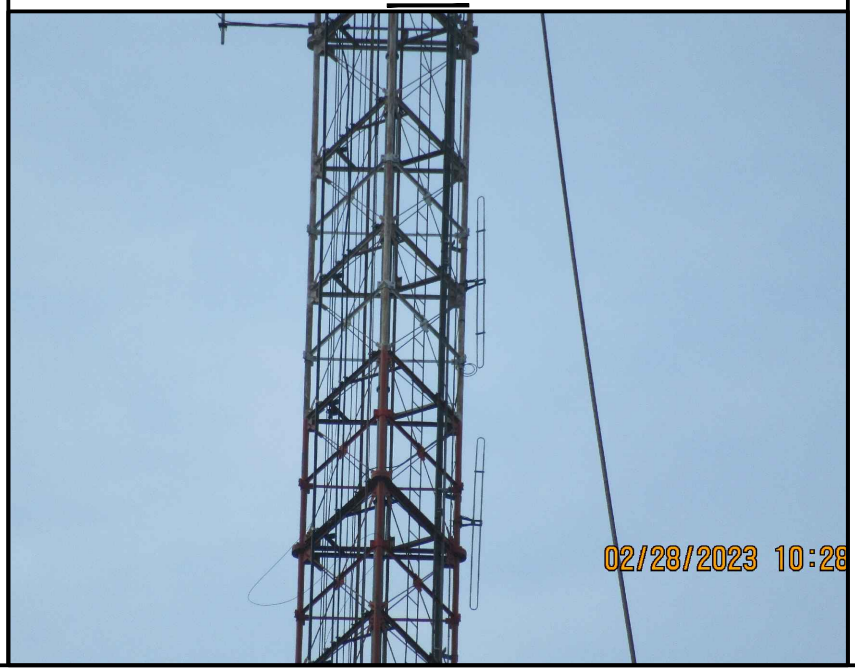

**TOWER MAPPING**

Site Name WMAW ROSE HILL
TEP # 327679.814193
ASR # 1041037
Field Work Date 02/28/2023
Report Date 3/28/2023
Page 54 of 64

TOWER ENGINEERING PROFESSIONALS

**Carrier** UNKNOWN

## ANTENNA AND MOUNT SKETCH

**Front/Side Elevation**

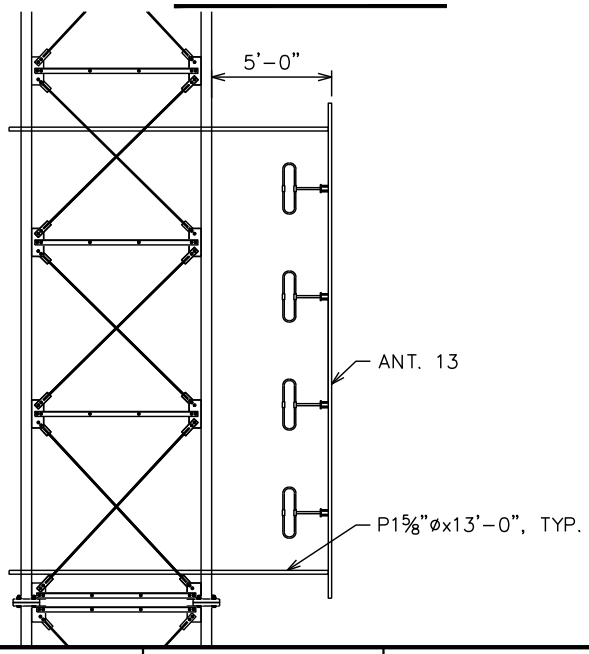


**Plan View**

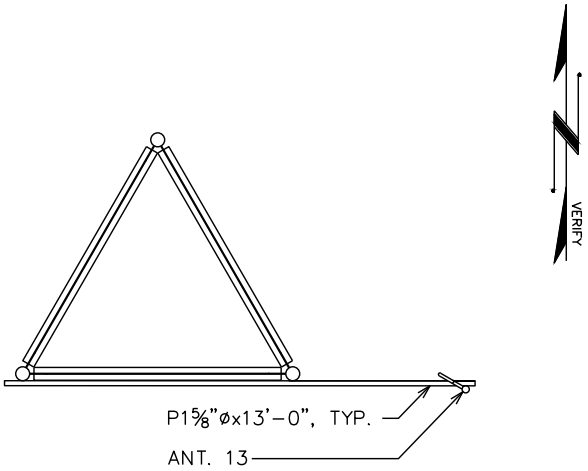


| Antenna # | Mount Elevation | Antenna Elevation | Mount Type | Leg | Azimuth |
|---|---|---|---|---|---|
| 13 | 511', 530' | 520'-6" | STANDOFF | B | 300° |

| Antenna Manufacturer | Antenna Model # | TMA (#) / Model # | (Coax Quantity) Size |
|---|---|---|---|
| UNKNOWN | 20', 4 ELEMENT DIPOLE | -- | (1) ⅞" |

**Photo**

**TOWER MAPPING**

Site Name WMAW ROSE HILL
TEP # 327679.814193
ASR # 1041037
Field Work Date 02/28/2023
Report Date 3/28/2023
Page 55 of 64

TOWER ENGINEERING PROFESSIONALS

**Carrier** UNKNOWN

## ANTENNA AND MOUNT SKETCH

**Front/Side Elevation**

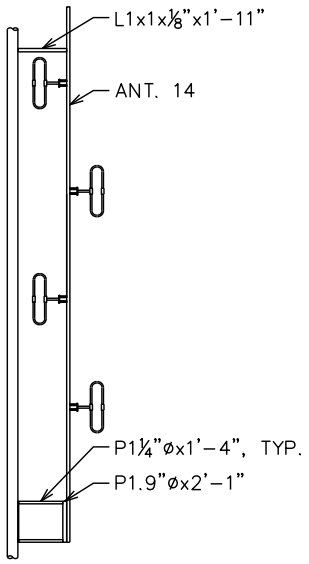


**Plan View**

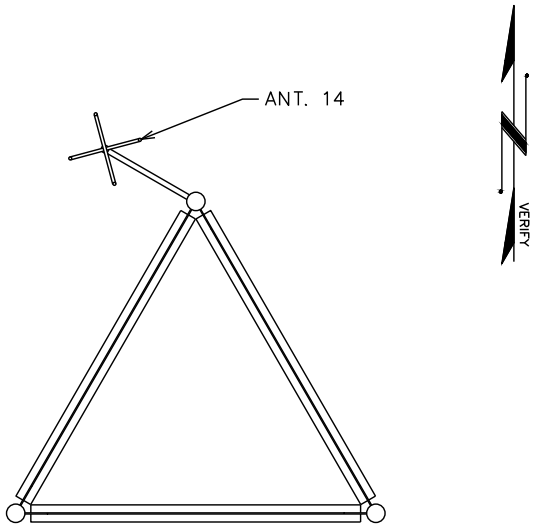


| Antenna # | Mount Elevation | Antenna Elevation | Mount Type | Leg | Azimuth |
|---|---|---|---|---|---|
| 14 | 616' | 626' | STANDOFF | A | 300° |

| Antenna Manufacturer | Antenna Model # | TMA (#) / Model # | (Coax Quantity) Size |
|---|---|---|---|
| UNKNOWN | 21', 4 ELEMENT DIPOLE | -- | (1) 1⅝" |

**Photo**

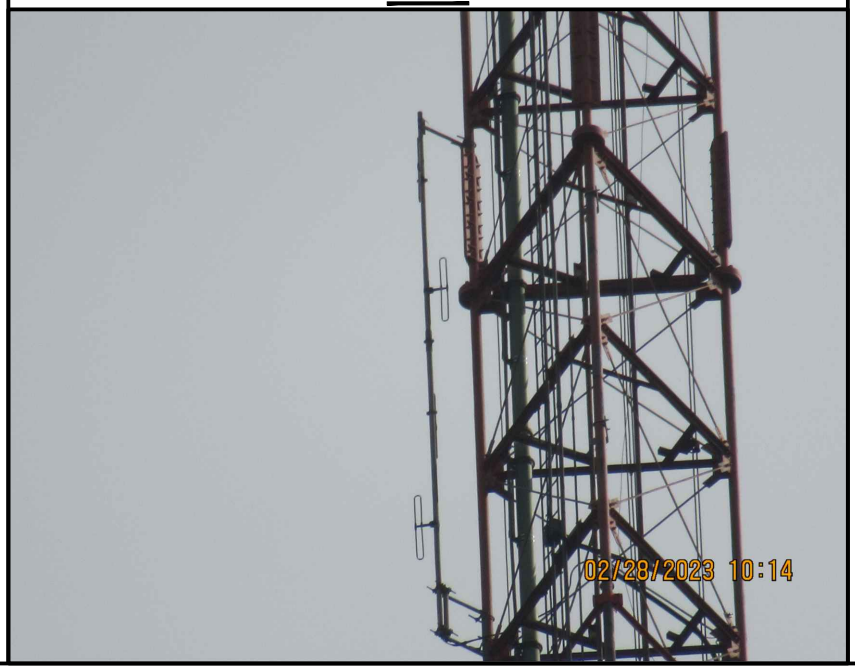

**TOWER MAPPING**

Site Name WMAW ROSE HILL
TEP # 327679.814193
ASR # 1041037
Field Work Date 02/28/2023
Report Date 3/28/2023
Page 56 of 64

TOWER ENGINEERING PROFESSIONALS

**Carrier** UNKNOWN

## ANTENNA AND MOUNT SKETCH

**Front/Side Elevation**

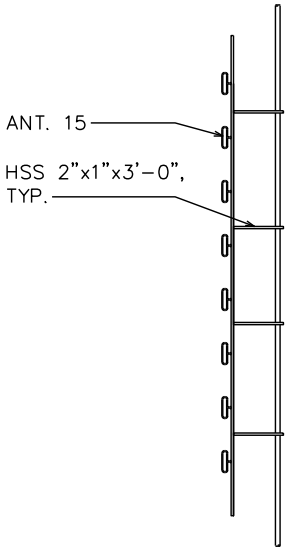


**Plan View**

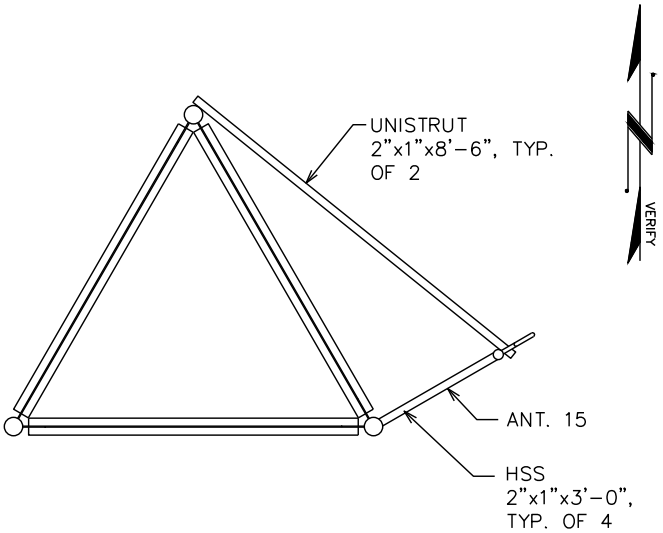


| Antenna # | Mount Elevation | Antenna Elevation | Mount Type | Leg | Azimuth |
|---|---|---|---|---|---|
| 15 | 680', 691', 703', 713' | 697' | STANDOFF | B | 60° |

| Antenna Manufacturer | Antenna Model # | TMA (#) / Model # | (Coax Quantity) Size |
|---|---|---|---|
| UNKNOWN | 44', 8 ELEMENT DIPOLE | -- | (1) 7/8" |

**Photo**

**TOWER MAPPING**

Site Name WMAW ROSE HILL
TEP # 327679.814193
ASR # 1041037
Field Work Date 02/28/2023
Report Date 3/28/2023
Page 57 of 64

TOWER ENGINEERING PROFESSIONALS

**Carrier** UNKNOWN

## ANTENNA AND MOUNT SKETCH

**Front/Side Elevation**

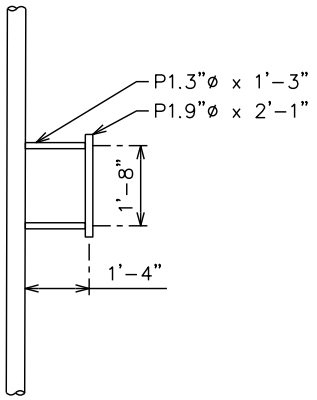


**Plan View**

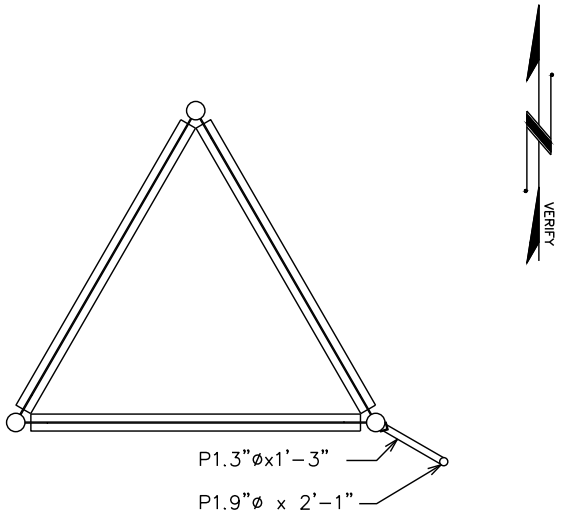


| Antenna # | Mount Elevation | Antenna Elevation | Mount Type | Leg | Azimuth |
|---|---|---|---|---|---|
| -- | 747' | -- | STANDOFF | B | 120° |

| Antenna Manufacturer | Antenna Model # | TMA (#) / Model # | (Coax Quantity) Size |
|---|---|---|---|
| UNKNOWN | -- | -- | -- |

**Photo**

**TOWER MAPPING**

Site Name WMAW ROSE HILL
TEP # 327679.814193
ASR # 1041037
Field Work Date 02/28/2023
Report Date 3/28/2023
Page 58 of 64

TOWER ENGINEERING PROFESSIONALS

**Carrier** UNKNOWN

## ANTENNA AND MOUNT SKETCH

**Front/Side Elevation**

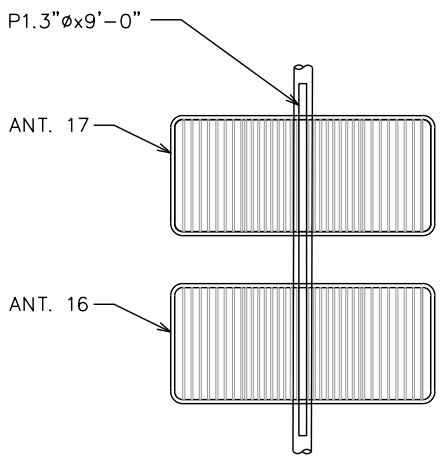


**Plan View**

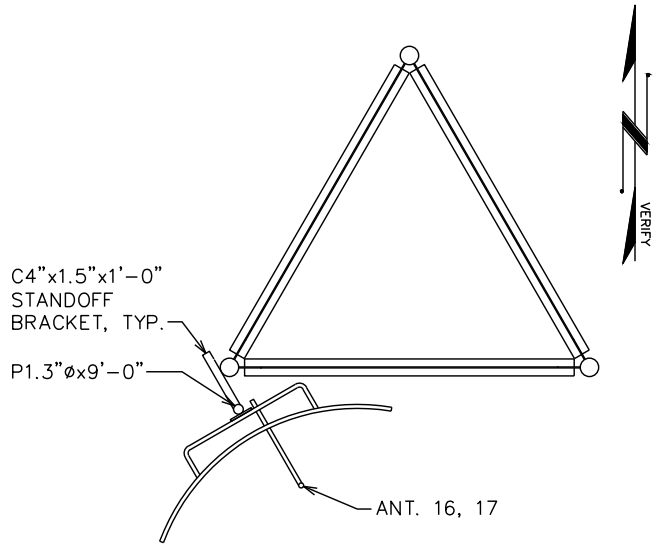


| Antenna # | Mount Elevation | Antenna Elevation | Mount Type | Leg | Azimuth |
|---|---|---|---|---|---|
| 16-17 | 765' | (16) 763'<br>(17) 767' | STANDOFF | C | 150° |

| Antenna Manufacturer | Antenna Model # | TMA (#) / Model # | (Coax Quantity) Size |
|---|---|---|---|
| UNKNOWN | 5.5'x3' GRID DISH | -- | -- |

**Photo**

**TOWER MAPPING**

Site Name WMAW ROSE HILL
TEP # 327679.814193
ASR # 1041037
Field Work Date 02/28/2023
Report Date 3/28/2023
Page 59 of 64

TOWER ENGINEERING PROFESSIONALS

**Carrier** UNKNOWN

## ANTENNA AND MOUNT SKETCH

**Front/Side Elevation**

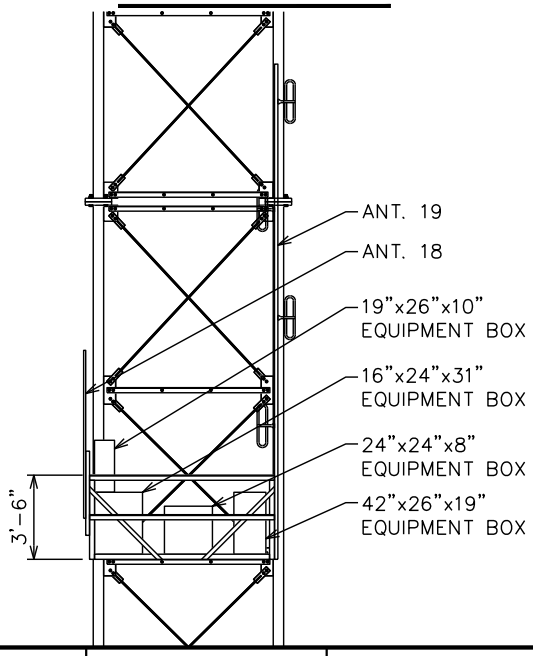


**Plan View**

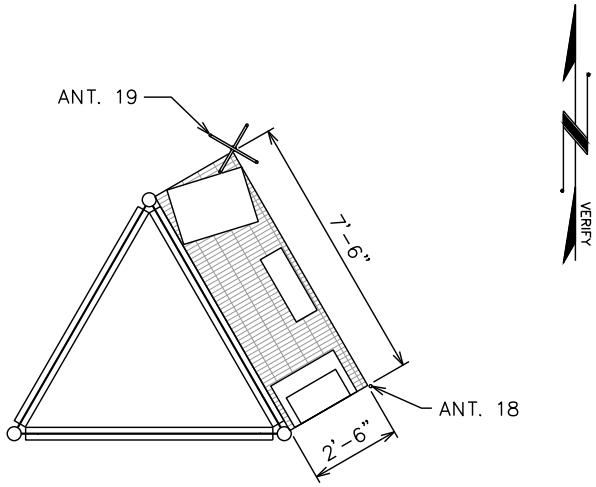


| Antenna # | Mount Elevation | Antenna Elevation | Mount Type | Leg | Azimuth |
|---|---|---|---|---|---|
| 18 | 798' | 804' | PLATFORM | B | -- |
| 19 | 798' | 808' | | A | -- |

| Antenna Manufacturer | Antenna Model # | TMA (#) / Model # | (Coax Quantity) Size |
|---|---|---|---|
| UNKNOWN | (18) 1"Ø x 7' OMNI | -- | -- |
| UNKNOWN | (19) 21', 4 ELEMENT DIPOLE | -- | -- |

**Photo**

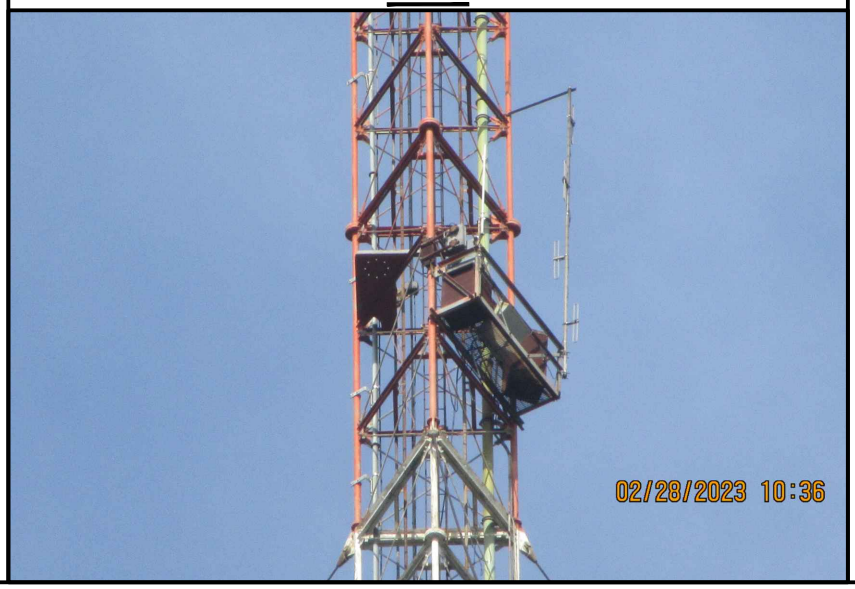

**TOWER MAPPING**

Site Name WMAW ROSE HILL
TEP # 327679.814193
ASR # 1041037
Field Work Date 02/28/2023
Report Date 3/28/2023
Page 60 of 64

TOWER ENGINEERING PROFESSIONALS

**Carrier** WMAW-FM

## ANTENNA AND MOUNT SKETCH

**Front/Side Elevation**

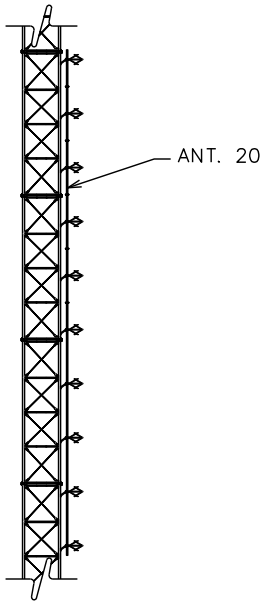


**Plan View**

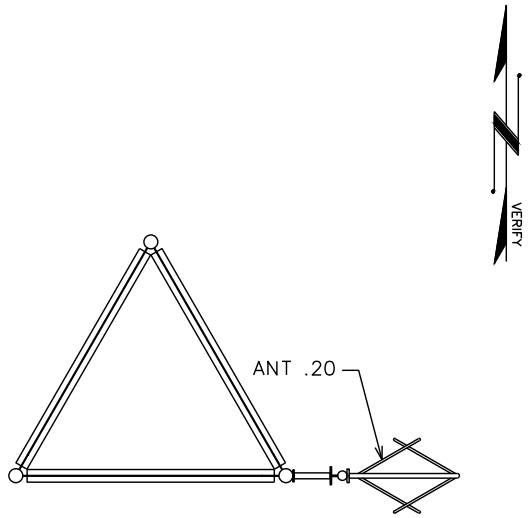


| Antenna # | Mount Elevation | Antenna Elevation | Mount Type | Leg | Azimuth |
|---|---|---|---|---|---|
| 20 | 826' - 926' | 826' - 926' | STANDOFF | B | 90° |

| Antenna Manufacturer | Antenna Model # | TMA (#) / Model # | (Coax Quantity) Size |
|---|---|---|---|
| JAMPRO | JHPC-10 | -- | (1) 3⅛" RIGID |

**Photo**

**TOWER MAPPING**

Site Name WMAW ROSE HILL
TEP # 327679.814193
ASR # 1041037
Field Work Date 02/28/2023
Report Date 3/28/2023
Page 61 of 64

TOWER ENGINEERING PROFESSIONALS

**Carrier** WMAW-TV

## ANTENNA AND MOUNT SKETCH

**Front/Side Elevation**

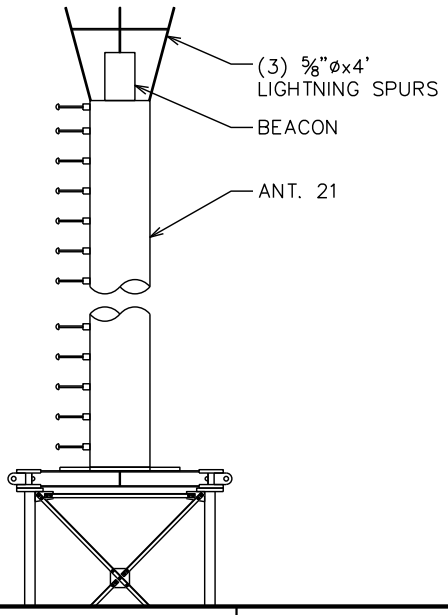


**Plan View**

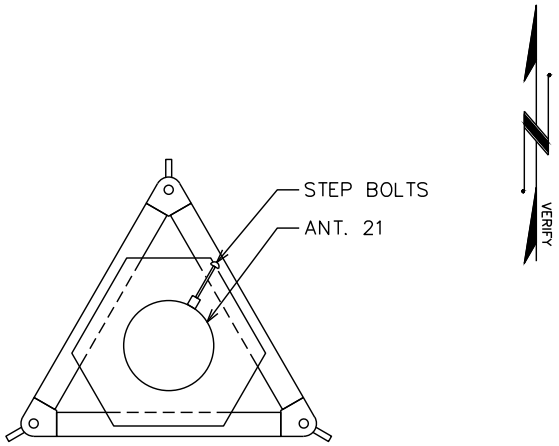


| Antenna # | Mount Elevation | Antenna Elevation | Mount Type | Leg | Azimuth |
|---|---|---|---|---|---|
| 21 | 997'-6" | 1025'-6" | DIRECT | -- | -- |

| Antenna Manufacturer | Antenna Model # | TMA (#) / Model # | (Coax Quantity) Size |
|---|---|---|---|
| DIELECTRIC | TUF-04-14/56H-1-T | -- | (1) 6 1/8" RIGID |

**Photo**

TOWER ENGINEERING PROFESSIONALS

**TOWER MAPPING**

Site Name WMAW ROSE HILL
TEP # 327679.814193
ASR # 1041037
Field Work Date 02/28/2023
Report Date 3/28/2023
Page 62 of 64

**PHOTOS**

**Tower Elevation**

**A-B Face**

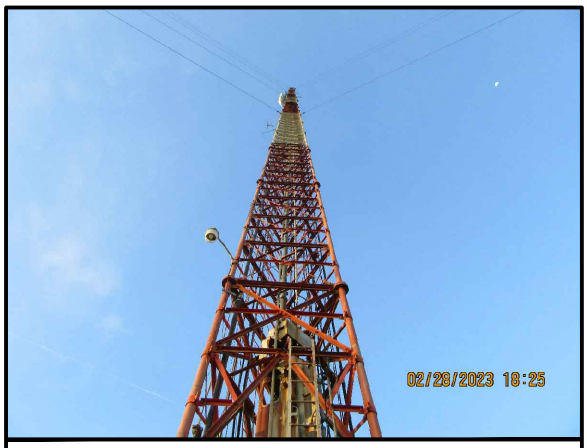


**B-C Face**

**C-A Face**

**TOWER MAPPING**

Site Name WMAW ROSE HILL
TEP # 327679.814193
ASR # 1041037
Field Work Date 02/28/2023
Report Date 3/28/2023
Page 63 of 64

## PHOTOS

**Base**

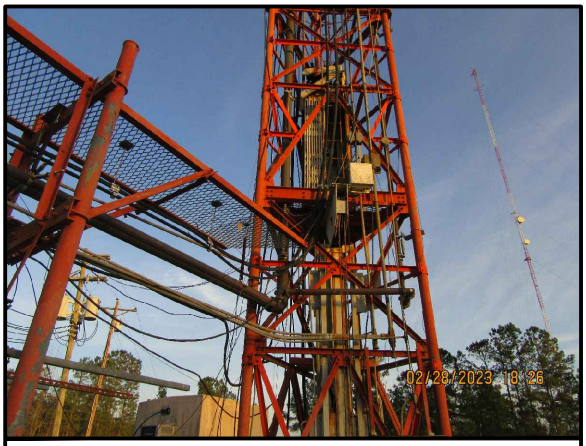


**Ice Bridge**

**Base Section**

**Access Gate**

**Compound**

**Compound**

**TOWER MAPPING**

Site Name WMAW ROSE HILL
TEP # 327679.814193
ASR # 1041037
Field Work Date 02/28/2023
Report Date 3/28/2023
Page 64 of 64

## PHOTOS

**Compound**

**Compound**

**Inner Anchor**

**Middle Anchor**

**Outer Anchor**