Prices effective February 5, 2018

Published July 2018

Canvas Office Landscape®

Channel

Introduction	**page 2**
Canvas Office Landscape Channel	**3**
Frame	5
Counterweight	7
Gallery Panel	8
Frame Structure	13
Connectors and Covers	17
Top Caps	25
Tiles	34
Energy Distribution	41
Screens	53
Indices	**65**
By Name	65
By Number	67
Appendices	
20-Day or Less/Assigned Lead-Time Order Information	
Stain-to-Match Program	
Customer's Own Material Order Information-Workspaces	
Proprietary Textiles Application Chart-Workspaces	
Proprietary Textile Colors-Workspaces	

For the latest materials information, refer to the Materials pages on HermanMiller.com.

Introduction

A Note on the Organization of This Book

There are a few signals that will help you understand the organization of this book. Once you know them, you should be able to find your way around easily.

Like a newspaper, this book is formatted with columns of text and illustrations that run vertically.

Information wraps from one column to the next and continues for as many pages as it needs to.

Black bars are clues.

A black bar at the top of a page signals the start of information about a product.

This information is divided into two sections, each signaled by a black bar. Product Information includes a description, additional notes, and dimensional drawings. Specification Information, which always begins at the top of a column, includes a series of steps. Each step represents a decision you need to make in order to complete your product number. Steps must be followed sequentially. The number of pages needed to complete information on a product varies; some will be complete in one page; others may fill three or four pages. Just continue going through the steps until you run into the next product, signaled by the black bar at the top of the page.

Black tabs running along the outside edge of the page help you locate what section you are in or what section you want to go to. You can thumb forwards or backwards to find a section; tabs and text appear on both sides of the page.

The additional pages in the back of the book include the appendices and indices. They are signaled by a long black bar running along the outside edge of the page.

The index is presented two ways.

The first index is in alphabetical order by product name. It can be helpful if you are new to the products and numbering scheme or if you are looking for a type of product, such as work chair or round table.
The second index is by product number. It lists, in alphanumeric order, the base product number, typically a five-digit number.

This book is effective February 5, 2018, subject to change without notice. Products may be purchased from authorized Herman Miller dealers who will quote prices upon request. For more information about our products and services or to see a list of dealers, visit www.HermanMiller.com.

All prices are list prices in US Dollars. Additional services, such as planning services, design, storage, and installation, are not included and must be added to these prices when the additional services are requested.

Illustrations, specifications, and prices are based on the latest information at the time of publication. The right is reserved to make changes at any time without notice in prices, fabrics, finishes, materials, specifications, and models, and also to discontinue models and finishes.

Dimensions shown in the drawings are engineering drawing dimensions rounded up to the nearest 1/8". Product is shipped set up or knocked down. Products that include "Shipped knocked down" in the description require some assembly. If this statement does not appear in the description, the product is shipped assembled.

Service problems are normally handled by a Herman Miller authorized dealer. Where this cannot be accomplished on a local level, service problems should be referred to the Customer Care Representative for your region, Herman Miller, Inc., Zeeland, Michigan 49464.

20-Day or Less/Assigned Lead-Time Shipments

All products and options in this price book not designated by an Assigned Program icon A will ship in **20 business days or less** after being acknowledged by Herman Miller.

Products and options designated by an A are on the assigned lead-time program and may ship in 20 days, less than 20 days, or more than 20 days from order acknowledgement.

Infrastructure

Energy Distribution

Screens

Frame FZ110.

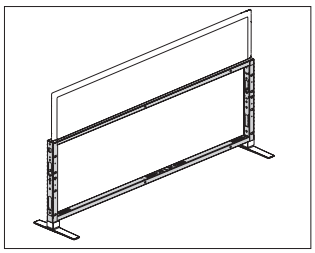

Product Information

Description

This steel frame defines space and channels power and data to the user. Frame holds individual tiles on both sides.

Notes

When finished with cladding, Channel structure is 3″ thick.

With feet added, Channel frame sits 4″ off the floor. Frame can be clad to have an open base or tiles to-the-floor.

24″- and 30″-wide frames cannot support access to power.

Power can enter from bottom opening using an internal direct connect-floor (FZ144.), from a receptacle location using an external direct connect (FZ140.), or from the end of Channel using a ceiling power entry (FZ142.), ordered separately.

Frames of unequal height cannot connect to each other.

Order the following products separately:

- Frame-to-frame connection hardware (FZ128.)
- Structural and nonstructural feet (FZ119., or FZ117.)
- To-the-floor or open base tiles (FZ375., or FZ170.)
- Standard or architectural top cap (FZ112., or FZ11A.)
- Standard or architectural finished end (FZ160., or FZ16A.)
- Power harness (FZ150.)
- Power jumper (FZ154.)

For cable capacity information, see Cable Capacity Charts in Omni.

Dimensions

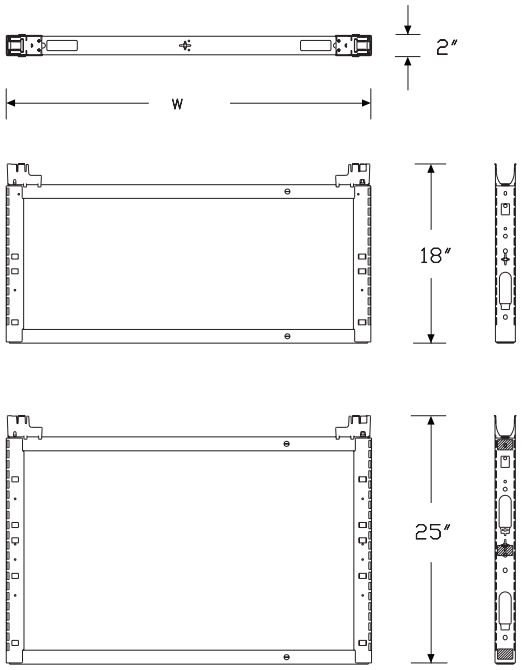

Specification Information

Step 1.

FZ110. A

Step 2. Height

22 22″ high A
29 29″ high A

Step 3. Width

24 24″ wide A
30 30″ wide A
36 36″ wide A
42 42″ wide A
48 48″ wide A
54 54″ wide A
60 60″ wide A
66 66″ wide A
72 72″ wide A

Prices for Steps 1-3.

		24	30	36	42	48	54
FZ110.	**22**	$135	140	145	150	160	176
	29	$138	144	151	157	165	190

		60	66	72
FZ110.	**22**	$187	192	203
	29	$200	205	210

Counterweight FZ19D.

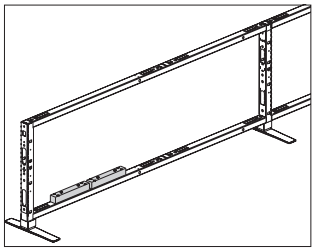

Product Information

Description

This counterweight attaches to the top of the lower frame rail. It is required for specific applications supported by structural feet. 1 counterweight includes 2 weighted blocks and attachment hardware.

Notes

Each counterweight includes 2 pieces.

For applications 5′- to 9′-long with structural feet (FZ119.), specify 2 counterweights.

For applications 9′ 6″- to 12′-long with structural feet (FZ119.), specify 1 counterweight.

For applications longer than 12′ with structural feet (FZ119.), no counterweight is required.

For more application information, see Channel Planning Guide.

Dimensions

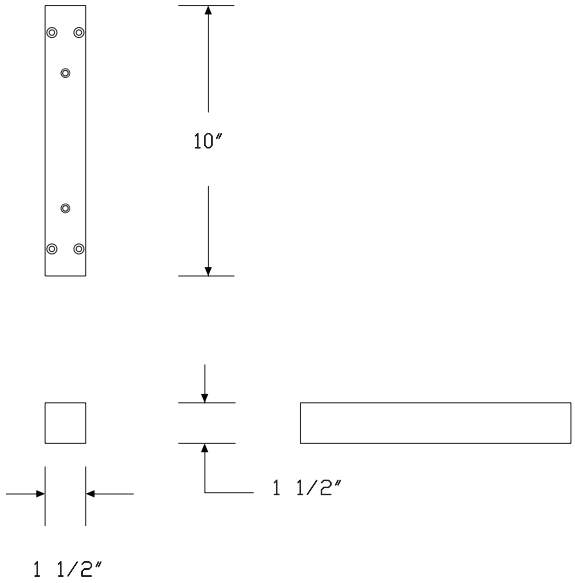

Specification Information

Step 1.

FZ19D.	$190

Gallery Panel, Channel Attached FZ113.

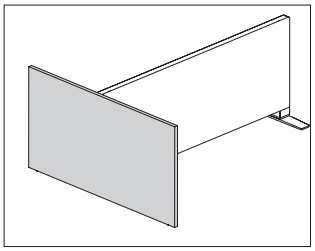

Product Information

Description

This structural panel stands on the floor and attaches to a Channel to provide end-of-run support and privacy. It is 1¼" thick and has a laminate surface with thermoplastic edge, laminate surface with a thermoplastic backed plywood edge, or a veneer surface and edge. Leveling glides and attachment hardware included.

Notes

Gallery panels ranging from 24"-72" wide come as a single piece. Gallery panels ranging from 84"-120" wide come in 3 pieces.

Mid-attached gallery panels are 3" wider than nominal dimension.

Leveling glides provide 2" of leveling adjustment.

Grain direction is vertical on veneer and wood-grain laminate panels.

Attachment direction is determined by facing the gallery panel from outside the workstation. Left attachment (L) connects the left side of a gallery panel to the end of a Channel. Right attachment (R) connects the right side of a gallery panel to the end of a Channel. Mid attachment (M) connects the middle of a gallery panel to the end of a Channel.

Dimensions

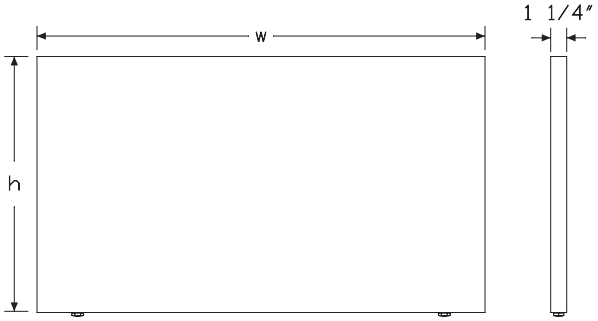

Specification Information

Step 1.

FZ113.

Step 2. Frame Height

22 use with 22"-high frames
29 use with 29"-high frames

Step 3. Gallery Panel Height

For use with 22"-high frames (22)

22 22" high
29 29" high
35 35" high
42 42" high
46 46" high

For use with 29"-high frames (29)

29 29" high
35 35" high
42 42" high
46 46" high

Step 4. Width

For 22" high (22)

24 24" wide
30 30" wide
36 36" wide
42 42" wide
48 48" wide
54 54" wide
60 60" wide
72 72" wide
78 78" wide

Gallery Panel, Channel Attached

continued

For 29" high (29), 35" high (35), 42" high (42), or 46" high (46)

24	24" wide
30	30" wide
36	36" wide
42	42" wide
48	48" wide
54	54" wide
60	60" wide
72	72" wide
78	78" wide
84	84" wide
90	90" wide
96	96" wide
120	120" wide

Step 5. Surface Material

L	laminate
W	veneer
U	laminate top/universal edge

Step 6. Attachment Method

For 24" wide (24), 30" wide (30), 36" wide (36), or 42" wide (42)

L	left attachment
R	right attachment

For 48" wide (48), 54" wide (54), or 60" wide (60)

L	left attachment
M	mid attachment
R	right attachment

For 72" wide (72), 78" wide (78), 84" wide (84), 90" wide (90), 96" wide (96), or 120" wide (120)

M	mid attachment

Prices for Steps 1-6.

			24LL	24LR	24WL	24WR	24UL	24UR
FZ113.	**22**	**22**	$227	227	591	591	227	227
		29	$303	303	667	667	303	303
		35	$408	408	898	898	408	408
		42	$455	455	1000	1000	455	455
		46	$505	505	1111	1111	505	505
	29	**29**	$303	303	667	667	303	303
		35	$408	408	898	898	408	408
		42	$455	455	1000	1000	455	455
		46	$505	505	1111	1111	505	505

			30LL	30LR	30WL	30WR	30UL	30UR
FZ113.	**22**	**22**	$328	328	813	813	328	328
		29	$404	404	889	889	404	404
		35	$510	510	1122	1122	510	510
		42	$556	556	1223	1223	556	556
		46	$606	606	1334	1334	606	606
	29	**29**	$404	404	889	889	404	404
		35	$510	510	1122	1122	510	510
		42	$556	556	1223	1223	556	556
		46	$606	606	1334	1334	606	606

			36LL	36LR	36WL	36WR	36UL	36UR
FZ113.	**22**	**22**	$379	379	924	924	379	379
		29	$455	455	1000	1000	455	455
		35	$562	562	1235	1235	562	562
		42	$606	606	1334	1334	606	606
		46	$657	657	1445	1445	657	657
	29	**29**	$455	455	1000	1000	455	455
		35	$562	562	1235	1235	562	562
		42	$606	606	1334	1334	606	606
		46	$657	657	1445	1445	657	657

			42LL	42LR	42WL	42WR	42UL	42UR
FZ113.	**22**	**22**	$455	455	1091	1091	455	455
		29	$531	531	1167	1167	531	531
		35	$638	638	1403	1403	638	638
		42	$682	682	1500	1500	682	682
		46	$733	733	1611	1611	733	733
	29	**29**	$531	531	1167	1167	531	531
		35	$638	638	1403	1403	638	638
		42	$682	682	1500	1500	682	682
		46	$733	733	1611	1611	733	733

			48LL	48LM	48LR	48WL	48WM	48WR
FZ113.	**22**	**22**	$530	530	530	1257	1245	1257
		29	$606	606	606	1334	1334	1334
		35	$714	714	714	1572	1713	1572
		42	$758	758	758	1667	1667	1667
		46	$808	808	808	1778	1779	1778
	29	**29**	$606	606	606	1334	1334	1334
		35	$714	714	714	1572	1713	1572
		42	$758	758	758	1667	1667	1667
		46	$808	808	808	1778	1779	1778

Gallery Panel, Channel Attached

continued

	48UL	48UM	48UR	54LL	54LM	54LR
FZ113. 22 22	$530	530	530	580	580	580
29	$606	606	606	656	656	656
35	$714	714	714	765	765	765
42	$758	758	758	808	808	808
46	$808	808	808	858	858	858
29 29	$606	606	606	656	656	656
35	$714	714	714	765	765	765
42	$758	758	758	808	808	808
46	$808	808	808	858	858	858

	54WL	54WM	54WR	54UL	54UM	54UR
FZ113. 22 22	$1307	1295	1307	580	580	580
29	$1384	1384	1384	656	656	656
35	$1622	1768	1622	765	765	765
42	$1717	1717	1717	808	808	808
46	$1828	1829	1828	858	858	858
29 29	$1384	1384	1384	656	656	656
35	$1622	1768	1622	765	765	765
42	$1717	1717	1717	808	808	808
46	$1828	1829	1828	858	858	858

	60LL	60LM	60LR	60WL	60WM	60WR
FZ113. 22 22	$631	631	631	1480	1465	1480
29	$707	707	707	1556	1556	1556
35	$816	816	816	1796	1958	1796
42	$859	859	859	1889	1889	1889
46	$909	909	909	2000	2000	2000
29 29	$707	707	707	1556	1556	1556
35	$816	816	816	1796	1958	1796
42	$859	859	859	1889	1889	1889
46	$909	909	909	2000	2000	2000

	60UL	60UM	60UR	72LM	72WM	72UM
FZ113. 22 22	$631	631	631	732	1685	732
29	$707	707	707	808	1778	808
35	$816	816	816	918	2202	918
42	$859	859	859	960	2111	960
46	$909	909	909	1010	2222	1010
29 29	$707	707	707	808	1778	808
35	$816	816	816	918	2202	918
42	$859	859	859	960	2111	960
46	$909	909	909	1010	2222	1010

	78LM	78WM	78UM	84LM	84WM	84UM
FZ113. 22 22	$833	1905	833	—	—	—
29	$909	1998	909	1010	2222	1010
35	$1019	2422	1019	1190	2692	1190
42	$1061	2331	1061	1212	2667	1212
46	$1111	2442	1111	1313	2889	1313
29 29	$908	1978	908	1010	2222	1010
35	$1019	2422	1019	1190	2692	1190
42	$1060	2311	1060	1212	2667	1212
46	$1110	2522	1110	1313	2889	1313

	90LM	90WM	90UM	96LM	96WM	96UM
FZ113. 22 29	$1060	2322	1060	1111	2445	1111
35	$1240	2802	1240	1290	2936	1290
42	$1262	2767	1262	1313	2889	1313
46	$1363	2989	1363	1414	3111	1414
29 29	$1060	2322	1060	1111	2445	1111
35	$1240	2802	1240	1290	2936	1290
42	$1262	2767	1262	1313	2889	1313
46	$1363	2989	1363	1414	3111	1414

	120LM	120WM	120UM
FZ113. 22 29	$1313	2889	1313
35	$1428	3425	1428
42	$1515	3333	1515
46	$1616	3556	1616
29 29	$1313	2889	1313
35	$1428	3425	1428
42	$1515	3333	1515
46	$1616	3556	1616

Step 7. Surface Finish

For 24" wide (24), 30" wide (30), 36" wide (36), 42" wide (42), 48" wide (48), 54" wide (54), 78" wide (78), 84" wide (84), 90" wide (90), 96" wide (96), or 120" wide (120) with laminate (L), or laminate top/universal edge (U)

1X	vanilla	+$0
28	canyon	+$0
29	misted	+$0
2X	wheat	+$0
38	twilight	+$0
39	desert	+$0
3X	celery	+$0
4X	coriander	+$0
5X	chamomile	+$0
6X	cinnamon	+$0

Gallery Panel, Channel Attached

continued

76	light brown walnut	+$0
7X	cardamom	+$0
8Q	folkstone grey	+$0
8X	kale	+$0
91	white	+$0
98	studio white	+$0
BU	black umber	+$0
CL	cool grey neutral	+$0
HF	inner tone light	+$0
HM	natural maple	+$0
HP	light anigre	+$0
HT	inner tone	+$0
HX	aged cherry	+$0
HY	walnut on cherry	+$0
J4	frosted light grey	+$0
LA	light ash	+$0
LBA	clear on ash	+$0
LBR	phantom ecru	+$0
LBS	phantom cocoa	+$0
LBU	medium matte walnut	+$0
LBV	warm grey teak	+$0
LBB	oak on ash	+$0
LBC	walnut on ash	+$0
LBD	dark brown walnut	+$0
LBE	medium red walnut	+$0
LBF	neutral twill	+$0
LBG	sarum twill	+$0
LBH	earthen twill	+$0
LBJ	graphite twill	+$0
LBK	pewter mesh	+$0
LBL	steel mesh	+$0
LBM	crisp linen	+$0
LBN	classic linen	+$0
LBP	casual linen	+$0
LBQ	white twill	+$0
LG	light grey (discontinuing)	+$0
LM	mahogany	+$0
LT	light tone	+$0
LU	soft white	+$0
MT	medium tone	+$0
OG	honey maple	+$0
WL	sandstone	+$0
WN	warm grey neutral	+$0
X1	chalk white	+$0

For 60" wide (60) or 72" wide (72) with laminate (L), or laminate top/ universal edge (U)

1X	vanilla	+$0
28	canyon	+$0
29	misted	+$0
2X	wheat	+$0
38	twilight	+$0
39	desert	+$0
3X	celery	+$0
4X	coriander	+$0
5X	chamomile	+$0
6X	cinnamon	+$0
7X	cardamom	+$0
8Q	folkstone grey	+$0
8X	kale	+$0
91	white	+$0
98	studio white	+$0
BU	black umber	+$0
CL	cool grey neutral	+$0
HF	inner tone light	+$0
HT	inner tone	+$0
J4	frosted light grey	+$0
LBK	pewter mesh	+$0
LBL	steel mesh	+$0
LBM	crisp linen	+$0
LBN	classic linen	+$0
LBP	casual linen	+$0
LG	light grey (discontinuing)	+$0
LT	light tone	+$0
LU	soft white	+$0
MT	medium tone	+$0
WL	sandstone	+$0
WN	warm grey neutral	+$0
X1	chalk white	+$0
ZZ	open line laminate (nonstandard)	+$20

Gallery Panel, Channel Attached

continued

For veneer (W)

2U	light brown walnut	+$0
3U	medium red cherry	+$0
40	dark brown walnut	+$0
6U	chocolate brown sapele	+$0
DU	cathedral recut natural maple	+$0
ED	aged cherry	+$0
EK	medium red walnut	+$0
ET	clear on ash	+$0
EU	oak on ash	+$0
EV	walnut on ash	+$0
EW	medium matte walnut	+$0
HU	cathedral recut light anigre	+$0
JU	cathedral recut aged cherry	+$0
UL	natural maple	+$0
UX	walnut on cherry	+$0
VU	cathedral recut light brown walnut	+$0
WU	cathedral recut walnut on cherry	+$0
XU	cathedral recut medium red cherry	+$0
ZU	cathedral recut chocolate brown sapele	+$0

Step 8. Edge Finish

For laminate (L)

76	light brown walnut	+$0
8Q	folkstone grey	+$0
91	white	+$0
98	studio white	+$0
BU	black umber	+$0
CL	cool grey neutral	+$0
HF	inner tone light	+$0
HM	natural maple	+$0
HP	light anigre	+$0
HT	inner tone	+$0
HX	aged cherry	+$0
HY	walnut on cherry	+$0
LA	light ash	+$0
LBA	clear on ash	+$0
LBR	phantom ecru	+$0
LBS	phantom cocoa	+$0
LBU	medium matte walnut	+$0
LBV	warm grey teak	+$0
LBB	oak on ash	+$0
LBC	walnut on ash	+$0
LBD	dark brown walnut	+$0
LBE	medium red walnut	+$0
LBF	neutral twill	+$0
LBG	sarum twill	+$0
LBH	earthen twill	+$0
LBJ	graphite twill	+$0
LBK	pewter mesh	+$0
LBL	steel mesh	+$0
LBM	crisp linen	+$0
LBN	classic linen	+$0
LBP	casual linen	+$0
LBQ	white twill	+$0
LU	soft white	+$0
MT	medium tone	+$0
WL	sandstone	+$0
WN	warm grey neutral	+$0

For laminate top/universal edge (U)

PLY	plywood edge	+$50

Non-Structural Foot FZ117.

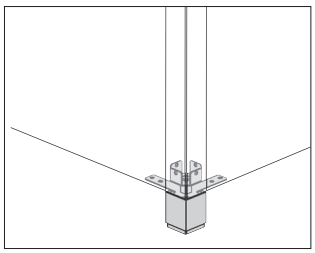

Product Information

Description

This individual foot attaches to 1 end of a frame, at the attachment point of 2 adjacent frames within a run, or multiple frames at a 2-, 3-, or 4-way connection. It adjusts up to 2″ for leveling. Attachment hardware included.

Notes

For use with open base tiles (FZ170.), specify open base (A) option.

For use with to-the-floor tiles (FZ375.), specify to-the-floor tile (B) option.

For use with 120° connections, specify end of frame (1A) option.

For length of run and proper support information, see planning guide.

Dimensions

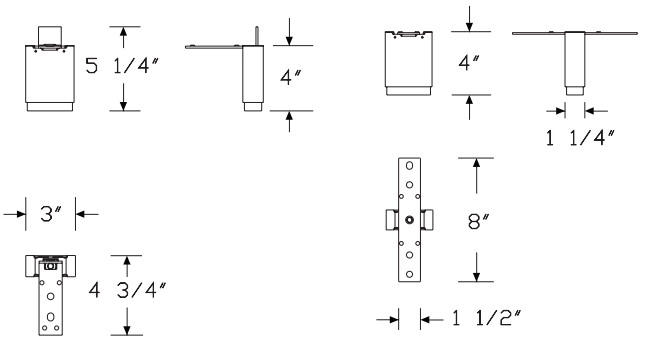

End of frame (1A)

Shared, frame to frame (1B)

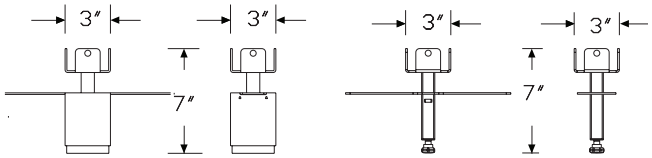

Open base foot (A)

To the floor tile foot (B)

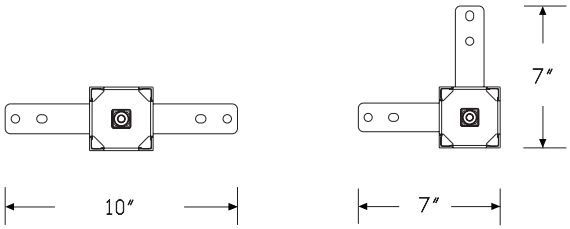

2-Way, 180 degree (2A)

2-Way, 90 degree (2C)

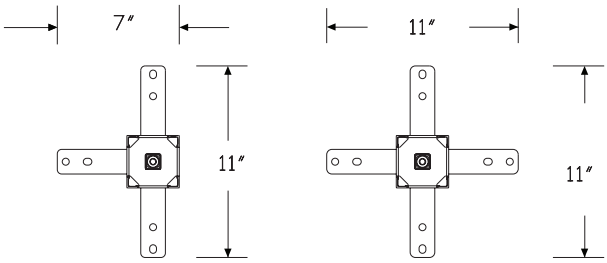

3-Way, 90 degree (3C)

4-Way, 90 degree (4C)

Specification Information

Step 1.

FZ117.

Step 2. Base Option

A	open base
B	to-the-floor tile

Step 3. Configuration

1A	end-of-frame
1B	shared, frame-to-frame connection
2C	2-way 90° connection
2A	2-way 180° connection
3C	3-way 90° connection
4C	4-way 90° connection

Prices for Steps 1-3.

		1A	1B	2C	2A	3C	4C
FZ117.	**A**	$119	125	236	236	241	248
	B	$60	63	118	118	121	124

Step 4. Surface Finish

For open base (A)

8Q	folkstone grey	+$0
91	white	+$0
98	studio white	+$0
CL	cool grey neutral	+$0
CN	metallic champagne	+$0
EH	metallic bronze	+$0
G1	graphite	+$0
MS	metallic silver	+$0
WL	sandstone	+$0
WN	warm grey neutral	+$0

Structural Foot FZ119.

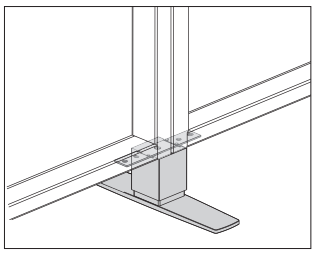

Product Information

Description

This individual structural foot supports 1 end of a frame or the attachment point of 2 adjacent frames, and can support a Channel wall run. It adjusts up to 2″ for leveling. Attachment hardware included.

Notes

For use with open base tiles (FZ170.). specify open base (A) option.

For use with to-the-floor tiles (FZ375.), specify to-the-floor tile (B) option.

Structural foot can be located at the end of a run (1), 6″ from the end (2), or be shared in a frame-to-frame connection (3).

For length of run and proper support information, see planning guide.

Dimensions

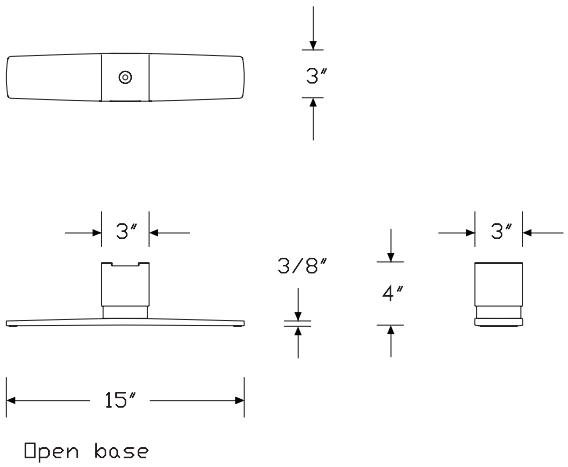

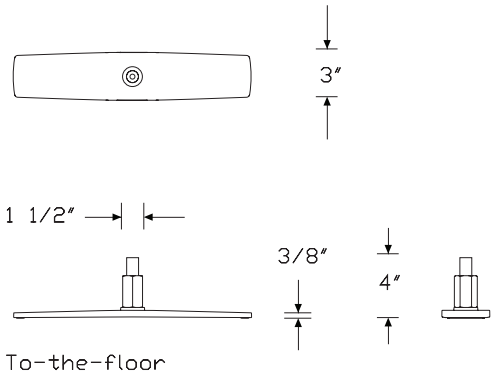

Specification Information

Step 1.

FZ119.

Step 2. Base Option

A	open base
B	to-the-floor tile

Step 3. Foot Location

1	end-of-frame
2	6" from end
3	shared, frame-to-frame connection

Prices for Steps 1-3.

		1	2	3
FZ119.	**A**	$245	245	245
	B	$210	210	210

Step 4. Surface Finish

Sand Texture Paint

8Q	folkstone grey	+$0
91	white	+$0
98	studio white	+$0
CL	cool grey neutral	+$0
G1	graphite	+$0
WL	sandstone	+$0
WN	warm grey neutral	+$0

Metallic Paint

CN	metallic champagne	+$0
EH	metallic bronze	+$0
MS	metallic silver	+$0

Frame-to-Frame Connection Hardware FZ128.

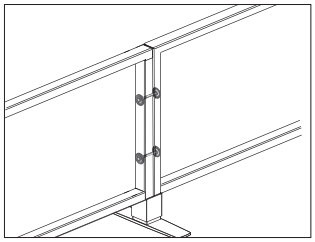

Product Information

Description

This hardware connects 2 frames of equal height in a straight line. Light seal included; finish is black.

Notes

When used with open base tiles (FZ170.), specify open base (A) option. When used with to-the-floor tiles (FZ375.), specify to-the-floor (B) option.

Dimensions

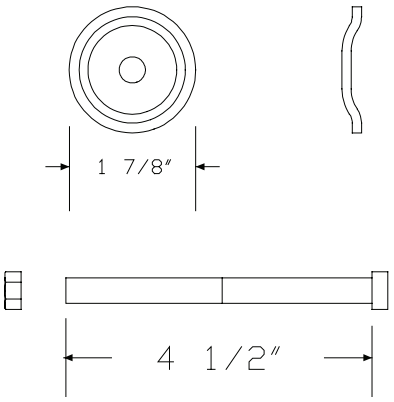

Specification Information

Step 1.

FZ128. A

Step 2. Frame Height

22 use with 22″-high frames A

29 use with 29″-high frames A

Step 3. Base Option

A open base A

B to-the-floor A

Prices for Steps 1-3.

		A	B
FZ128.	**22**	$23	23
	29	$23	23

90° Universal Connector FZ121.

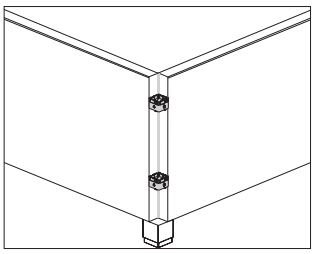

Product Information

Description

This connector joins 2, 3, or 4 frames of equal height at 90° angles. Attachment hardware and light seal included. Light seal finish is black.

Notes

Order the following products separately:

- 90° connector cover (FZ123.)
- 90° connector cover, architectural (FZ12B.)
- 90° connector top cap (FZ126.)
- 90° connector top cap, architectural (FZ12A.)

When used with open base tiles (FZ170.), specify open base (A) option.

When used with to-the-floor tiles (FZ375.), specify to-the-floor (B) option.

Dimensions

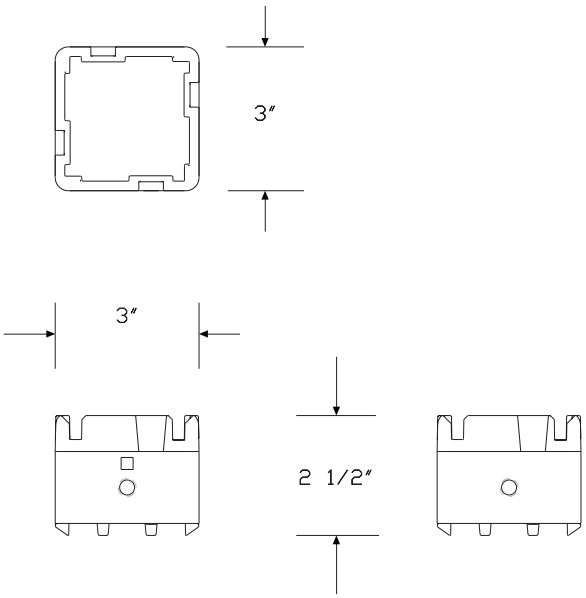

Specification Information

Step 1.

FZ121. A

Step 2. Configuration

2	2 way, 90° or 180° A
3	3 way A
4	4 way A

Step 3. Frame Height

22	use with 22″-high frames A
29	use with 29″-high frames A

Step 4. Base Option

A	open base A
B	to-the-floor A

Prices for Steps 1-4.

			A	B
FZ121.	**2**	**22**	$58	58
		29	$60	60
	3	**22**	$69	69
		29	$71	71
	4	**22**	$81	81
		29	$83	83

120° Universal Connector FZ131.

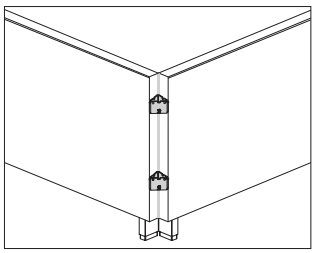

Product Information

Description

This connector joins 2 or 3 frames of equal height at 120° angles. Attachment hardware and light seal included. Light seal finish is black.

Notes

Order the following products separately:

- 120° connector cover (FZ133.)
- 120° connector top cap (FZ136.)

When used with open base tiles (FZ170.), specify open base (A) option.

When used with to-the-floor tiles (FZ375.), specify to-the-floor (B) option.

Dimensions

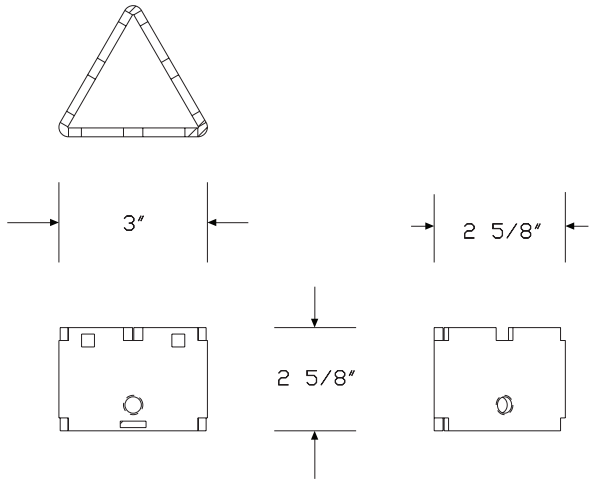

Specification Information

Step 1.

FZ131. A

Step 2. Configuration

2 2 way A

3 3 way A

Step 3. Frame Height

22 use with 22″-high frames A

29 use with 29″-high frames A

Step 4. Base Option

A open base A

B to-the-floor A

Prices for Steps 1-4.

			A	B
FZ131.	**2**	**22**	$92	92
		29	$96	96
	3	**22**	$102	102
		29	$107	107

90° Connector Cover FZ123.

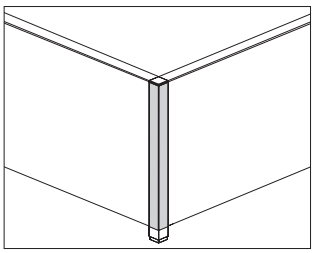

Product Information

Description

This connector cover attaches to a 90° universal connector and has a painted surface. Attachment hardware included.

Notes

Specify connector cover height to match frame height.

Specify 1 side covered (1) or 2 sides covered (2) configuration to match the number of exposed connector sides.

Order 90° connector top cap (FZ126.) separately.

Dimensions

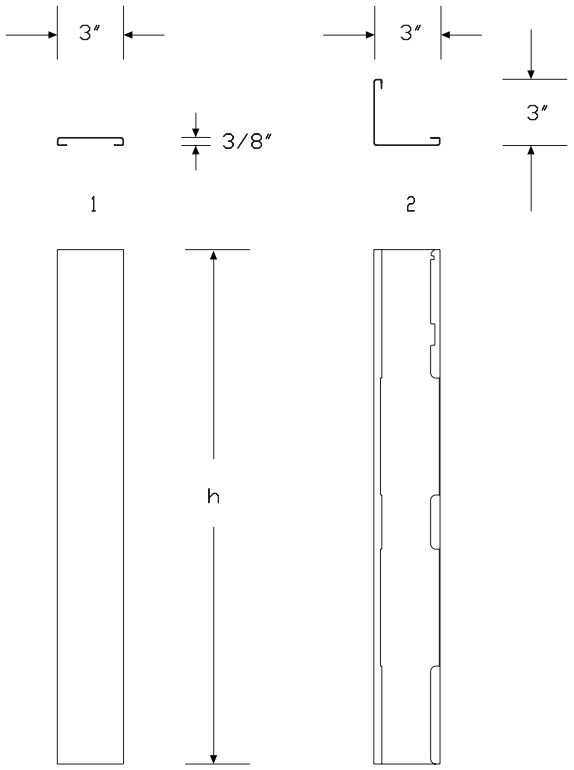

Specification Information

Step 1.

FZ123. A

Step 2. Configuration

1	1 side covered A
2	2 sides covered A

Step 3. Height

22	22″ high A
29	29″ high A

Step 4. Base Option

A	open base A
B	to-the-floor A

Step 5. Surface Material

P	painted A

Prices for Steps 1-5.

			AP	BP
FZ123.	**1**	**22**	$46	48
		29	$47	49
	2	**22**	$53	55
		29	$54	56

Step 6. Surface Finish

8Q	folkstone grey A	+$0
98	studio white A	+$0
WL	sandstone A	+$0
CN	metallic champagne A	+$0
EH	metallic bronze A	+$0
MS	metallic silver A	+$0
91	white A	+$0
CL	cool grey neutral A	+$0
G1	graphite A	+$0
WN	warm grey neutral A	+$0

90° Connector Cover, Architectural

FZ12B.

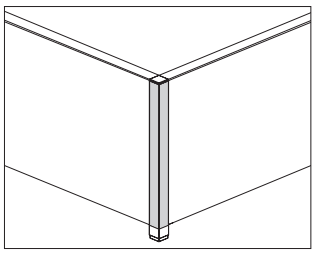

Product Information

Description

This connector cover attaches to a 90° universal connector and has a painted surface. Attachment hardware included.

Notes

Specify connector cover height to match frame height.

Specify 1 side covered (1) or 2 sides covered (2) configuration to match the number of exposed connector sides.

Order 90° connector top cap, architectural (FZ12A.) separately.

Dimensions

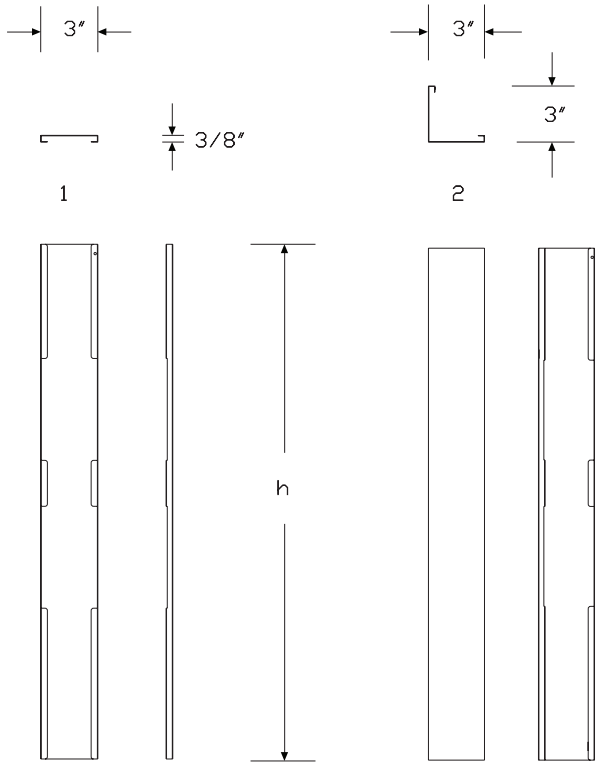

Specification Information

Step 1.

FZ12B. A

Step 2. Configuration

1	1 side covered A
2	2 sides covered A

Step 3. Height

22	22″ high A
29	29″ high A

Step 4. Base Option

A	open base A
B	to-the-floor A

Step 5. Surface Material

P	painted A

Prices for Steps 1-5.

			AP	BP
FZ12B.	**1**	**22**	$62	65
		29	$68	71
	2	**22**	$78	81
		29	$82	85

Step 6. Surface Finish

8Q	folkstone grey A	+$0
98	studio white A	+$0
WL	sandstone A	+$0
CN	metallic champagne A	+$0
EH	metallic bronze A	+$0
MS	metallic silver A	+$0
91	white A	+$0
CL	cool grey neutral A	+$0
G1	graphite A	+$0
WN	warm grey neutral A	+$0

120° Connector Cover FZ133.

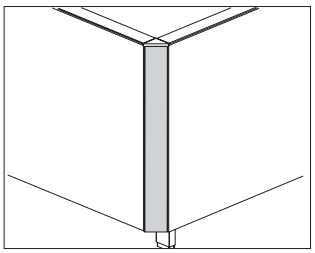

Product Information

Description

This connector cover attaches to a 120° connector and has a painted surface. Attachment hardware included.

Notes

Specify connector cover height to match frame height.

Dimensions

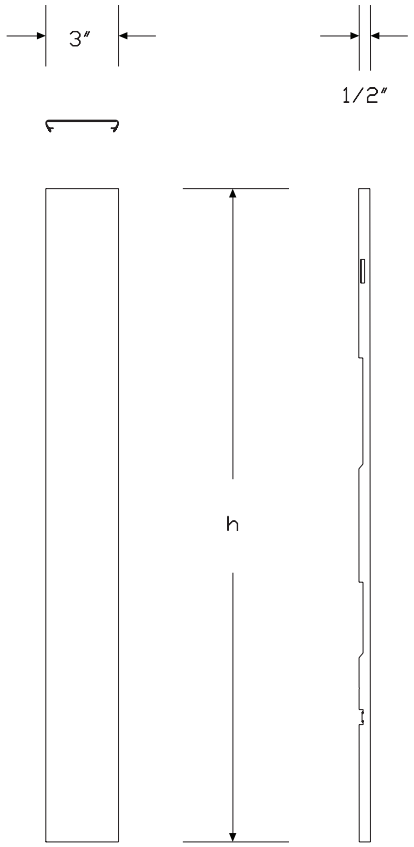

Specification Information

Step 1.

FZ133. A

Step 2. Configuration

1	1 side covered A

Step 3. Height

22	22″ high A
29	29″ high A

Step 4. Base Option

A	open base A
B	to-the-floor A

Step 5. Surface Material

P	painted A

Prices for Steps 1-5.

			AP	BP
FZ133.	**1**	**22**	$74	77
		29	$77	80

Step 6. Surface Finish

8Q	folkstone grey A	+$0
98	studio white A	+$0
WL	sandstone A	+$0
CN	metallic champagne A	+$0
EH	metallic bronze A	+$0
MS	metallic silver A	+$0
91	white A	+$0
CL	cool grey neutral A	+$0
G1	graphite A	+$0
WN	warm grey neutral A	+$0

Finished End FZ160.

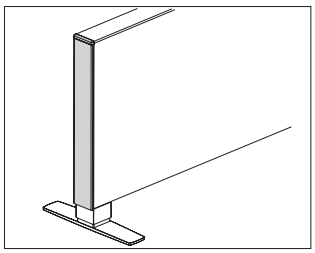

Product Information

Description

This cover finishes the exposed end of a single frame. It has a painted surface and a black light seal. Attachment hardware included.

Notes

Specify finished end height to match frame height.

For use with open base tiles (FZ170.), specify finished end open base (A) option; for use with to-the-floor tiles (FZ375.), specify finished end to-the-floor (B) option.

Order frame top cap (FZ112.) separately.

Dimensions

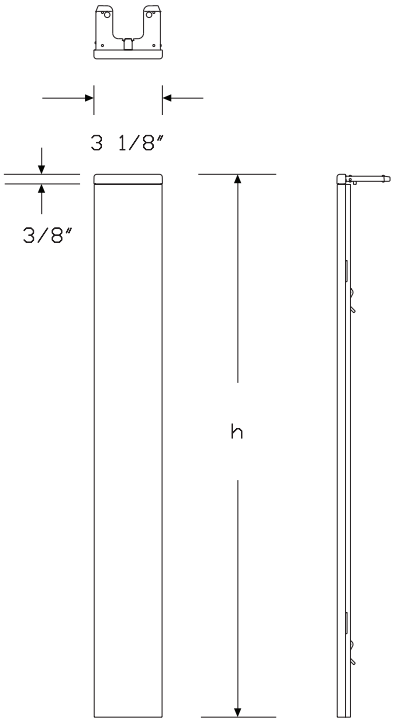

Specification Information

Step 1.

FZ160. A

Step 2. Height

22	22" high A
29	29" high A

Step 3. Base Option

A	open base A
B	to-the-floor A

Step 4. Surface Material

P	painted A

Prices for Steps 1-4.

			P
FZ160.	**22**	**A**	$43
		B	$48
	29	**A**	$46
		B	$51

Step 5. Surface Finish

8Q	folkstone grey A	+$0
98	studio white A	+$0
WL	sandstone A	+$0
91	white A	+$0
CL	cool grey neutral A	+$0
G1	graphite A	+$0
WN	warm grey neutral A	+$0
CN	metallic champagne A	+$0
EH	metallic bronze A	+$0
MS	metallic silver A	+$0

Finished End, Architectural FZ16A.

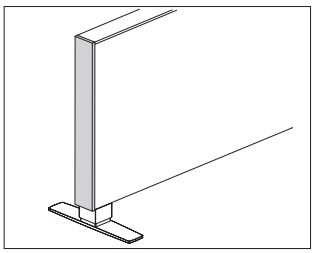

Product Information

Description

This cover finishes the exposed end of a single frame. It has a painted surface and a black light seal. Attachment hardware included.

Notes

Specify finished end height to match frame height.

For use with open base tiles (FZ170.), specify finished end open base (A) option; for use with to-the-floor tiles (FZ375.), specify finished end to-the-floor (B) option.

Order frame top cap, architectural (FZ11A.) separately.

Dimensions

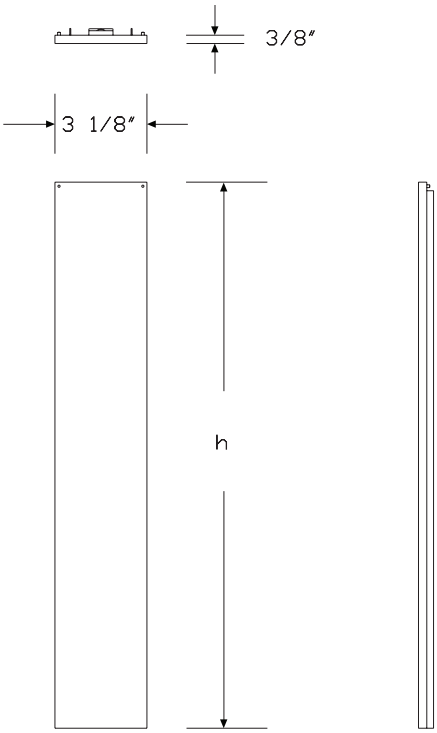

Specification Information

Step 1.

FZ16A. A

Step 2. Height

22	22″ high A
29	29″ high A

Step 3. Base Option

A	open base A
B	to-the-floor A

Step 4. Surface Material

P	painted A

Prices for Steps 1-4.

			P
FZ16A.	**22**	**A**	$180
		B	$189
	29	**A**	$189
		B	$198

Step 5. Surface Finish

8Q	folkstone grey A	+$0
98	studio white A	+$0
WL	sandstone A	+$0
91	white A	+$0
CL	cool grey neutral A	+$0
G1	graphite A	+$0
WN	warm grey neutral A	+$0
CN	metallic champagne A	+$0
EH	metallic bronze A	+$0
MS	metallic silver A	+$0

Top Cap FZ112.

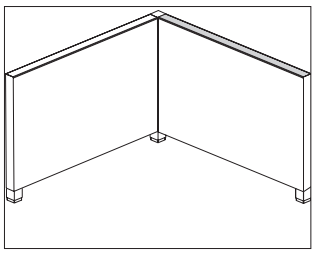

Product Information

Description

This top cap trims the top of an individual frame or frames and has a painted surface. Attachment hardware included.

Notes

Tiles (FZ170. or FZ375.) must be specified on both sides of frame for top cap to attach.

Top cap covers 1 or 2 frames.

Frame top cap is not required for frame with frame top screen.

Dimensions

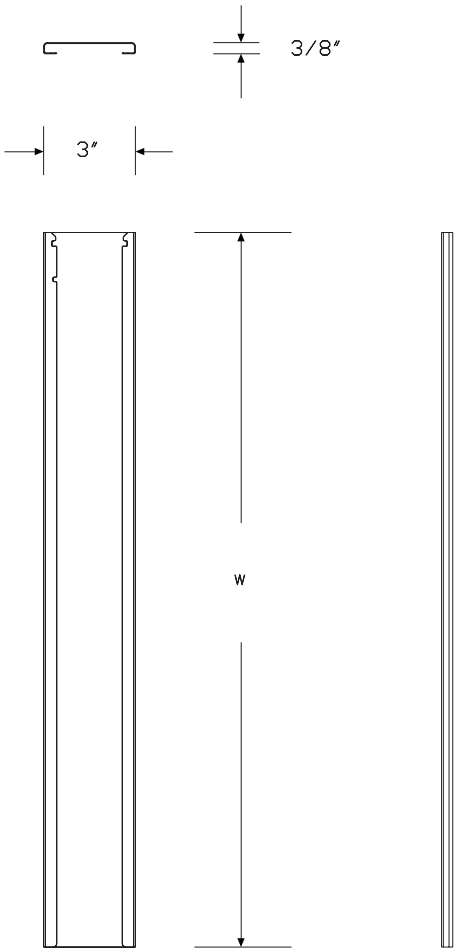

Specification Information

Step 1.

FZ112. A

Step 2. Width

24	24″ wide A
30	30″ wide A
36	36″ wide A
42	42″ wide A
48	48″ wide A
54	54″ wide A
60	60″ wide A
66	66″ wide A
72	72″ wide A
78	78″ wide A
84	84″ wide A
90	90″ wide A
96	96″ wide A

Step 3. Surface Material

P	painted A

Prices for Steps 1-3.

		P
FZ112.	**24**	$29
	30	$32
	36	$36
	42	$40
	48	$43
	54	$49
	60	$53
	66	$56
	72	$60
	78	$64
	84	$67
	90	$80
	96	$84

Step 4. Surface Finish

8Q	folkstone grey A	+$0
98	studio white A	+$0
WL	sandstone A	+$0
91	white A	+$0
CL	cool grey neutral A	+$0
G1	graphite A	+$0
WN	warm grey neutral A	+$0
CN	metallic champagne A	+$0
EH	metallic bronze A	+$0
MS	metallic silver A	+$0

Top Cap, Architectural FZ11A.

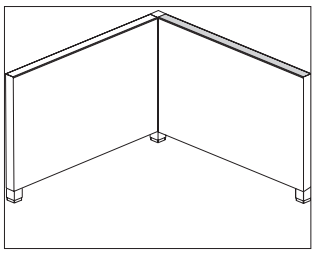

Product Information

Description

This top cap trims the top of an individual frame or spans 2 frames within a run. Attachment hardware included.

Notes

Tiles (FZ110. or FZ375.) must be specified on both sides of frame for top cap to attach.

Top cap covers 1 or 2 frames.

Frame top cap is not required for frame with frame top screen.

Dimensions

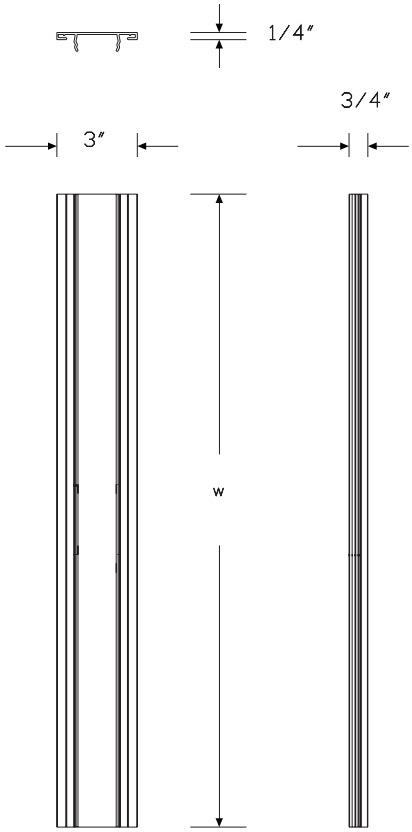

Specification Information

Step 1.

FZ11A. A

Step 2. Width

24	24″ wide	A
30	30″ wide	A
36	36″ wide	A
42	42″ wide	A
48	48″ wide	A
54	54″ wide	A
60	60″ wide	A
66	66″ wide	A
72	72″ wide	A
78	78″ wide	A
84	84″ wide	A
90	90″ wide	A
96	96″ wide	A

Step 3. Surface Material

P	painted	A

Prices for Steps 1-3.

		P
FZ11A.	**24**	$66
	30	$76
	36	$85
	42	$94
	48	$105
	54	$112
	60	$124
	66	$133
	72	$143
	78	$154
	84	$163
	90	$187
	96	$199

Step 4. Surface Finish		
8Q	folkstone grey A	+$0
98	studio white A	+$0
WL	sandstone A	+$0
91	white A	+$0
CL	cool grey neutral A	+$0
G1	graphite A	+$0
WN	warm grey neutral A	+$0
CN	metallic champagne A	+$0
EH	metallic bronze A	+$0
MS	metallic silver A	+$0

90° Connector Top Cap FZ126.

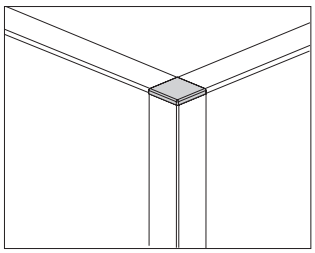

Product Information

Description

This cap trims the top of a connector and has a painted surface. Attachment hardware included.

Notes

Specify top cap to connect into total number of adjacent equal-height frame top caps.

Order the following products separately:

- 90° connector cover (FZ123.)
- Frame top cap (FZ112.)

Dimensions

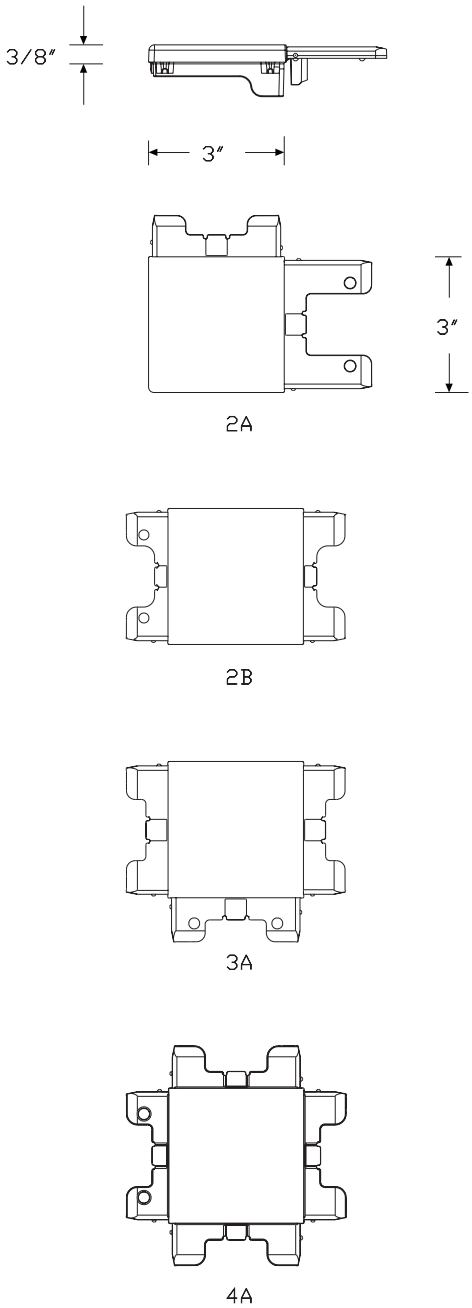

Specification Information

Step 1.

FZ126. A

Step 2. Configuration

2A	for 2 frame top caps, 90° A
2B	for 2 frame top caps, 180° A
3A	for 3 frame top caps A
4A	for 4 frame top caps A

Step 3. Surface Material

P	painted A

Prices for Steps 1-3.

		P
FZ126.	**2A**	$29
	2B	$29
	3A	$29
	4A	$29

Step 4. Surface Finish

8Q	folkstone grey A	+$0
98	studio white A	+$0
WL	sandstone A	+$0
CN	metallic champagne A	+$0
EH	metallic bronze A	+$0
MS	metallic silver A	+$0
91	white A	+$0
CL	cool grey neutral A	+$0
G1	graphite A	+$0
WN	warm grey neutral A	+$0

90° Connector Top Cap, Architectural FZ12A.

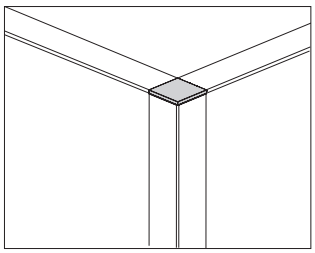

Product Information

Description

This cap trims the top of an architectural connector and has a painted surface. Attachment hardware included.

Notes

Specify top cap to connect into total number of adjacent equal-height architectural frame top caps.

Order the following products separately:

- 90° connector cover, architectural (FZ12B.)
- Frame top cap, architectural (FZ11A.)

Dimensions

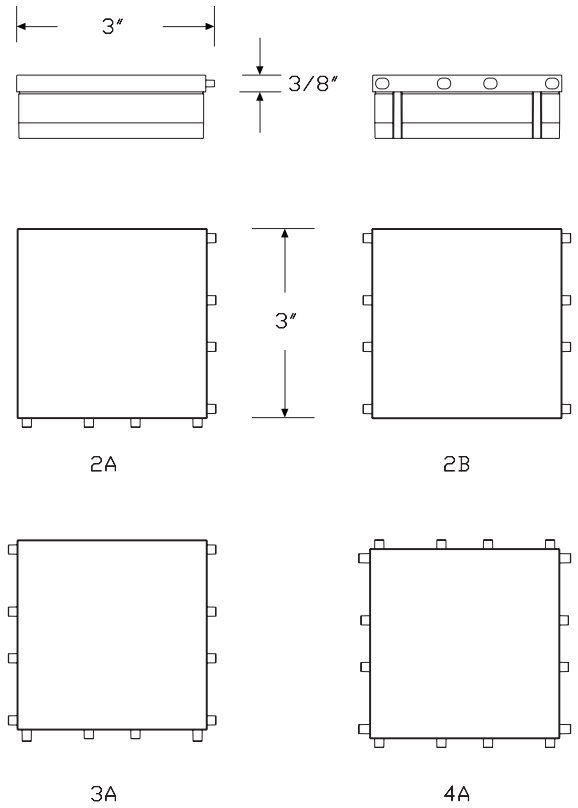

Specification Information

Step 1.

FZ12A. A

Step 2. Configuration

2A	for 2 frame top caps, 90° A
2B	for 2 frame top caps, 180° A
3A	for 3 frame top caps A
4A	for 4 frame top caps A

Step 3. Surface Material

P	painted A

Prices for Steps 1-3.

		P
FZ12A.	**2A**	$24
	2B	$24
	3A	$24
	4A	$24

Step 4. Surface Finish

8Q	folkstone grey A	+$0
98	studio white A	+$0
WL	sandstone A	+$0
CN	metallic champagne A	+$0
EH	metallic bronze A	+$0
MS	metallic silver A	+$0
91	white A	+$0
CL	cool grey neutral A	+$0
G1	graphite A	+$0
WN	warm grey neutral A	+$0

120° Connector Top Cap FZ136.

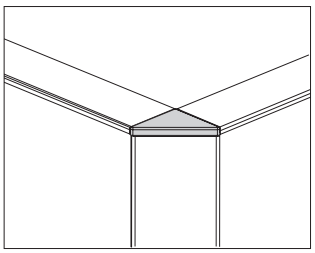

Product Information

Description

This cap trims the top of a 120° connector and has a painted surface. Attachment hardware included.

Notes

Specify top cap to connect into total number of adjacent equal-height frame top caps.

Order the following products separately:

- 120° connector cover (FZ133.)
- Frame top cap (FZ112.)

Dimensions

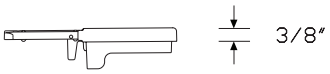

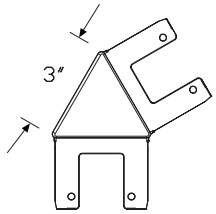

2

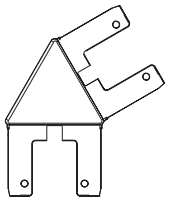

2A

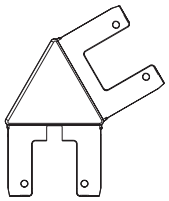

2B

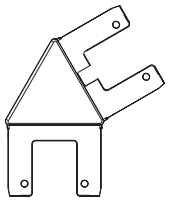

2C

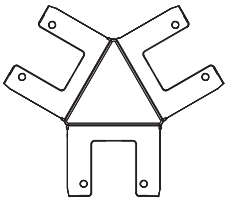

3

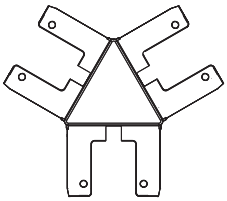

3A

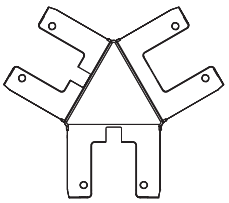

3B

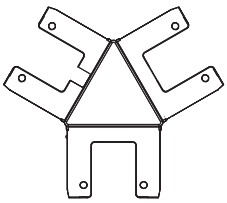

3C

Specification Information

Step 1.

FZ136. A

Step 2. Configuration

2	connects into 2 frame top caps A
2A	connects into 2 frame top screens A
2B	connects into frame top screen left, frame top cap right A
2C	connects into frame top cap left and frame top screen right A
3	connects into 3 frame top caps A
3A	connects into 3 frame top screens A
3B	connects into frame top screen 2 sides, frame top cap 1 side A
3C	connects into frame top screen 1 side, frame top cap 2 sides A

Step 3. Surface Material

P	painted A

Prices for Steps 1-3.

		P
FZ136.	**2**	$33
	2A	$56
	2B	$56
	2C	$56
	3	$33
	3A	$56
	3B	$56
	3C	$56

Step 4. Surface Finish

8Q	folkstone grey A	+$0
98	studio white A	+$0
WL	sandstone A	+$0
CN	metallic champagne A	+$0
EH	metallic bronze A	+$0
MS	metallic silver A	+$0
91	white A	+$0
CL	cool grey neutral A	+$0
G1	graphite A	+$0
WN	warm grey neutral A	+$0

Open Base Tile FZ170.

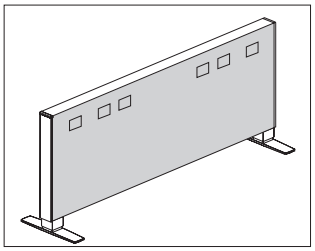

Product Information

Description

This tile attaches to 1 side of a frame and has a painted metal or tackable fabric surface. It is available with or without power and data access at the top power location. Tile is UL listed and NFPA classified. Attachment hardware included.

Notes

Specify width of tile to match width of frame (FZ110.).

To access power and data, order power harness (FZ152.) separately.

For tackable fabric tile with cutouts for hardwired junction boxes (meets Chicago electrical code requirements), specify (O), (P), or (Q) cutout location options.

Painted metal tile with cutouts for hardwired junction boxes already meets Chicago electrical code requirements.

Tiles 24" wide and 30" wide do not support power and data access.

Tiles 36"-54" wide support power and data access at left-hand top and right-hand top of tile only.

Tiles 78" wide cover joined 48"- and 30"-wide frame pairs; power and data access is on 48"-wide frame side only.

Tiles 84" wide cover 2 42"-wide frames.

Tiles 96" wide cover 2 48"-wide frames.

When specifying tackable fabric, horizontal (R) option, fabric direction is horizontal (railroaded). Specify all tiles within the workstation to be the same fabric direction.

Fabric-covered tile accepts Customer's Own Material (COM). Yardage is estimated for directional, 54"-wide fabrics.

Height—Yardage
22"—0.60
29"—0.80

For tackable fabric, horizontal option (R):

Width—Yardage
24"—0.80
30"—1.00
36"—1.10
42"—1.30
48"—1.50
54"—1.60
60"—1.80
66"—2.00
72"—2.10
78"—2.30
84"—2.50
96"—2.80

For information on multiple quantities or directional fabrics, contact COM Department. See Order Information in appendices.

Dimensions

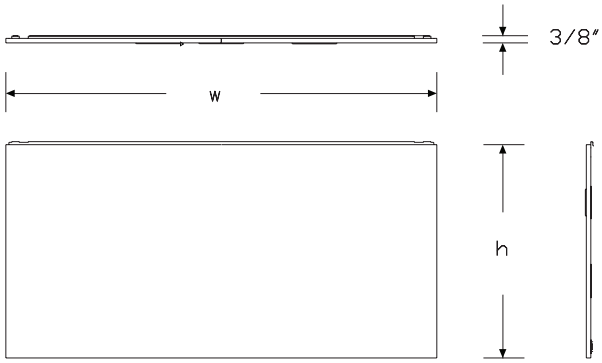

For 36",42",48",54" and 78" wide tiles

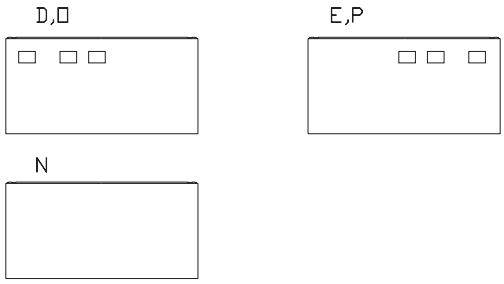

For 60",66",72",84" and 96" wide tiles

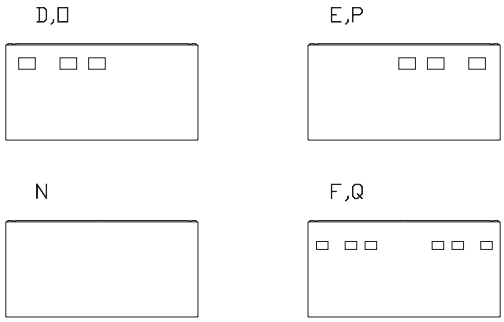

Specification Information

Step 1.

FZ170. A

Step 2. Surface Material

T fabric A
R fabric, horizontal A
P painted A

Step 3. Height

22 22" high A
29 29" high A

Step 4. Width

For fabric (T)

24 24" wide A
30 30" wide A
36 36" wide A
42 42" wide A
48 48" wide A

For fabric, horizontal (R)

24 24" wide A
30 30" wide A
36 36" wide A
42 42" wide A
48 48" wide A
54 54" wide A
60 60" wide A
66 66" wide A
72 72" wide A
78 78" wide A
84 84" wide A
96 96" wide A

For painted (P)

24 24" wide A
30 30" wide A
36 36" wide A
42 42" wide A
48 48" wide A
54 54" wide A
60 60" wide A
66 66" wide A
72 72" wide A

Step 5. Cutout Location

For fabric (T), fabric, horizontal (R), or painted (P) with 24" wide (24) or 30" wide (30)

N no cutout A

For fabric (T) or fabric, horizontal (R) with 36" wide (36), 42" wide (42), 48" wide (48), 54" wide (54), or 78" wide (78)

N no cutout A
D power/data cutouts at LH top of cladding A
E power/data cutouts at RH top of cladding A

For fabric, horizontal (R) with 60" wide (60), 66" wide (66), 72" wide (72), 84" wide (84), or 96" wide (96)

N no cutout A
D power/data cutouts at LH top of cladding A
E power/data cutouts at RH top of cladding A
F power/data cutouts in the LH and RH top of cladding A

For painted (P) with 36" wide (36), 42" wide (42), 48" wide (48), or 54" wide (54)

N no cutout A
D power/data cutouts at LH top of cladding A
E power/data cutouts at RH top of cladding A

For painted (P) with 60" wide (60), 66" wide (66), or 72" wide (72)

N no cutout A
D power/data cutouts at LH top of cladding A
E power/data cutouts at RH top of cladding A
F power/data cutouts in the LH and RH top of cladding A

Prices for Steps 1-5.

			24N	30N	36N	36D	36E	42N
FZ170.	**T**	**22**	$139	149	160	200	200	156
		29	$142	152	163	200	203	159
	R	**22**	$139	149	160	200	200	156
		29	$142	152	163	203	203	159
	P	**22**	$195	208	224	280	280	218
		29	$199	212	229	285	285	223

			42D	42E	48N	48D	48E	54N
FZ170.	**T**	**22**	$196	196	166	206	206	—
		29	$196	199	169	206	209	—
	R	**22**	$196	196	166	206	206	249
		29	$199	199	169	209	209	254
	P	**22**	$274	274	232	288	288	348
		29	$279	279	237	293	293	356

			54D	54E	60N	60D	60E	60F
FZ170.	**R**	**22**	$289	289	267	307	307	317
		29	$294	294	272	312	312	322
	P	**22**	$404	404	373	429	429	443
		29	$412	412	381	437	437	451

			66N	66D	66E	66F	72N	72D
FZ170.	**R**	**22**	$277	317	317	327	288	328
		29	$283	323	323	333	294	334
	P	**22**	$388	444	444	458	403	459
		29	$396	452	452	466	412	468

			72E	72F	78N	78D	78E	84N
FZ170.	**R**	**22**	$328	338	296	336	336	305
		29	$334	344	302	342	342	311
	P	**22**	$459	473	—	—	—	—
		29	$468	482	—	—	—	—

			84D	84E	84F	96N	96D	96E
FZ170.	**R**	**22**	$345	345	355	324	364	364
		29	$351	351	361	331	371	371

			96F
FZ170.	**R**	**22**	$374
		29	$381

Step 6. Surface Finish

For painted (P)

8Q	folkstone grey A	+$0
91	white A	+$0
98	studio white A	+$0
CL	cool grey neutral A	+$0
G1	graphite A	+$0
WL	sandstone A	+$0
WN	warm grey neutral A	+$0

For painted (P)

CN	metallic champagne A	+$0
EH	metallic bronze A	+$0
MS	metallic silver A	+$0

For fabric (T) AND fabric, horizontal (R)

	22	29
Price Category 1	+$0	0
Price Category 2	+$13	19
Price Category 3	+$21	33
Price Category 4	+$33	51
Price Category 5	+$69	103
Price Category B	+$35	52
Price Category C	+$52	79
Price Category D	+$69	103
Price Category E	+$84	128
Price Category F	+$122	174
Price Category G	+$158	226

Step 7. Receptacle Trim Finish

For power/data cutouts at LH top of cladding (D), power/data cutouts at RH top of cladding (E), or power/data cutouts in the LH and RH top of cladding (F)

8Q	folkstone grey A	+$0
91	white A	+$0
98	studio white A	+$0
CL	cool grey neutral A	+$0
G1	graphite A	+$0
WL	sandstone A	+$0
WN	warm grey neutral A	+$0

To-The-Floor Tiles FZ375.

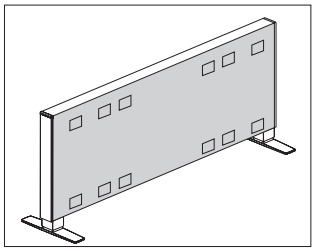

Product Information

Description

This tile attaches to 1 side of a frame and has a painted metal or tackable fabric surface. It is available with or without power and data access at the top and/or bottom power locations. Tile is UL listed and NFPA classified. Attachment hardware included.

Notes

Specify width of tile to match width of frame (FZ110.).

To access power and data, order power harness (FZ152.) separately.

For tackable fabric tile with cutouts for hardwired junction boxes (meets Chicago electrical code requirements), specify (O), (P), (Q), (S), (T), (U), (V), (W), or (X) cutout location options.

Painted metal tile with cutouts for hardwired junction boxes already meets Chicago electrical code requirements.

Tiles 24" wide and 30" wide do not support power and data access.

Tiles 36"-54" wide support power and data access at left-hand top and right-hand top of tile only.

Tiles 78" wide cover joined 48"- and 30"-wide frame pairs; power and data access is on 48"-wide frame side only.

Tiles 84" wide cover 2 42"-wide frames.

Tiles 96" wide cover 2 48"-wide frames.

When specifying tackable fabric, horizontal (R) option, fabric direction is horizontal (railroaded). Specify all tiles within the workstation to be the same fabric direction.

Fabric-covered tile accepts Customer's Own Material (COM). Yardage is estimated for directional, 54"-wide fabrics.

Height—Yardage
22"—0.70
29"—0.90

For tackable fabric, horizontal option (R):

Width—Yardage
24"—0.80
30"—1.00
36"—1.10
42"—1.30
48"—1.50
54"—1.60
60"—1.80
66"—2.00
72"—2.10
78"—2.30
84"—2.50
96"—2.80

For information on multiple quantities or directional fabrics, contact COM Department. See Order Information in appendices.

Dimensions

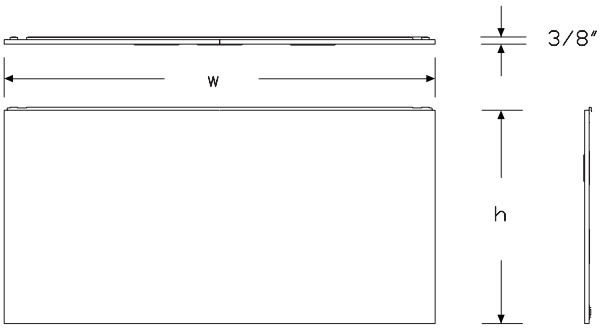

For 36",42",48",54" and 78" wide tiles

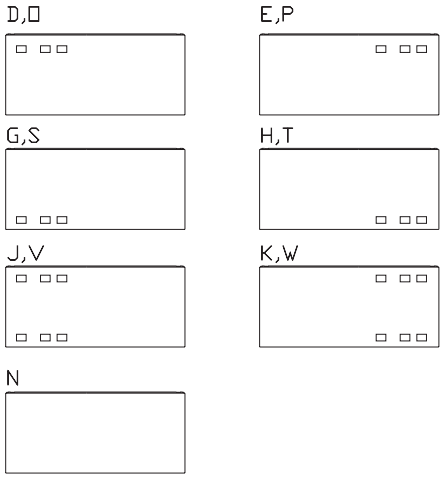

For 60",66",72",84" and 96" wide tiles

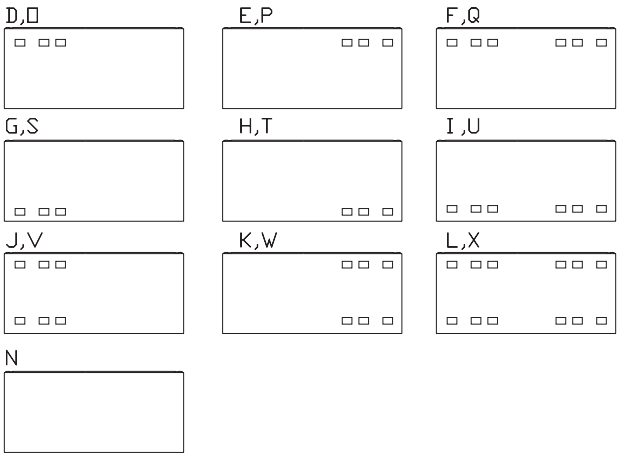

Specification Information

Step 1.

FZ375. A

Step 2. Surface Material

T fabric A
R fabric, horizontal A
P painted A

Step 3. Height

22 22" high A
29 29" high A

Step 4. Width

For fabric (T)

24 24" wide A
30 30" wide A
36 36" wide A
42 42" wide A
48 48" wide A

For fabric, horizontal (R)

24 24" wide A
30 30" wide A
36 36" wide A
42 42" wide A
48 48" wide A
54 54" wide A
60 60" wide A
66 66" wide A
72 72" wide A
78 78" wide A
84 84" wide A
96 96" wide A

For painted (P)

24 24" wide A
30 30" wide A
36 36" wide A
42 42" wide A
48 48" wide A
54 54" wide A
60 60" wide A
66 66" wide A
72 72" wide A

Step 5. Cutout Location

For fabric (T), fabric, horizontal (R), or painted (P) with 24" wide (24) or 30" wide (30)

N no cutout A

For fabric (T) or fabric, horizontal (R) with 36" wide (36), 42" wide (42), 48" wide (48), 54" wide (54), or 78" wide (78)

N no cutout A
D power/data cutouts at LH top of cladding A
E power/data cutouts at RH top of cladding A
G power/data cutouts at LH bottom of cladding A
H power/data cutouts at RH bottom of cladding A
J power/data cutouts in the LH top and bottom of cladding A
K power/data cutouts in the RH top and bottom of cladding A

For fabric, horizontal (R) with 60" wide (60), 66" wide (66), 72" wide (72), 84" wide (84), or 96" wide (96)

N no cutout A
D power/data cutouts at LH top of cladding A
E power/data cutouts at RH top of cladding A
F power/data cutouts in the LH and RH top of cladding A
G power/data cutouts at LH bottom of cladding A
H power/data cutouts at RH bottom of cladding A
I power/data cutouts in the LH and RH bottom of cladding A
J power/data cutouts in the LH top and bottom of cladding A
K power/data cutouts in the RH top and bottom of cladding A
L power/data cutouts in the LH and RH top and bottom of cladding A

For painted (P) with 36" wide (36), 42" wide (42), 48" wide (48), or 54" wide (54)

N no cutout A
D power/data cutouts at LH top of cladding A
E power/data cutouts at RH top of cladding A
G power/data cutouts at LH bottom of cladding A
H power/data cutouts at RH bottom of cladding A
J power/data cutouts in the LH top and bottom of cladding A
K power/data cutouts in the RH top and bottom of cladding A

For painted (P) with 60" wide (60), 66" wide (66), or 72" wide (72)

N	no cutout A
D	power/data cutouts at LH top of cladding A
E	power/data cutouts at RH top of cladding A
F	power/data cutouts in the LH and RH top of cladding A
G	power/data cutouts at LH bottom of cladding A
H	power/data cutouts at RH bottom of cladding A
I	power/data cutouts in the LH and RH bottom of cladding A
J	power/data cutouts in the LH top and bottom of cladding A
K	power/data cutouts in the RH top and bottom of cladding A
L	power/data cutouts in the LH and RH top and bottom of cladding A

Prices for Steps 1-5.

			24N	30N	36N	36D	36E	36G
FZ375.	**T**	**22**	$172	180	190	230	230	230
		29	$177	185	195	235	235	235
	R	**22**	$172	180	190	230	230	230
		29	$177	185	195	235	235	235
	P	**22**	$240	252	266	322	322	322
		29	$248	259	273	329	329	329

			36H	36J	36K	42N	42D	42E
FZ375.	**T**	**22**	$230	240	240	200	240	240
		29	$235	245	245	205	245	245
	R	**22**	$230	240	240	200	240	240
		29	$235	245	245	205	245	245
	P	**22**	$322	336	336	280	336	336
		29	$329	343	343	287	343	343

			42G	42H	42J	42K	48N	48D
FZ375.	**T**	**22**	$240	240	250	250	208	248
		29	$245	245	255	255	213	253
	R	**22**	$240	240	250	250	208	248
		29	$245	245	255	255	213	253
	P	**22**	$336	336	350	350	291	347
		29	$343	343	357	357	298	354

			48E	48G	48H	48J	48K	54N
FZ375.	**T**	**22**	$248	248	248	258	258	—
		29	$253	253	253	263	263	—
	R	**22**	$248	248	248	258	258	235
		29	$253	253	253	263	263	240
	P	**22**	$347	347	347	361	361	329
		29	$354	354	354	368	368	336

			54D	54E	54G	54H	54J	54K
FZ375.	**R**	**22**	$275	275	275	275	285	285
		29	$280	280	280	280	290	290
	P	**22**	$385	385	385	385	399	399
		29	$392	392	392	392	406	406

			60N	60D	60E	60F	60G	60H
FZ375.	**R**	**22**	$265	305	305	315	305	305
		29	$270	310	310	320	310	310
	P	**22**	$371	427	427	441	427	427
		29	$378	434	434	448	434	434

			60I	60J	60K	60L	66N	66D
FZ375.	**R**	**22**	$315	315	315	325	285	325
		29	$320	320	320	330	290	330
	P	**22**	$441	441	441	455	399	455
		29	$448	448	448	462	406	462

			66E	66F	66G	66H	66I	66J
FZ375.	**R**	**22**	$325	335	325	325	335	335
		29	$330	340	330	330	340	340
	P	**22**	$455	469	455	455	469	469
		29	$462	476	462	462	476	476

			66K	66L	72N	72D	72E	72F
FZ375.	**R**	**22**	$335	345	295	335	335	345
		29	$340	350	300	340	340	350
	P	**22**	$469	483	413	469	469	483
		29	$476	490	420	476	476	490

			72G	72H	72I	72J	72K	72L
FZ375.	**R**	**22**	$335	335	345	345	345	355
		29	$340	340	350	350	350	360
	P	**22**	$469	469	483	483	483	497
		29	$476	476	490	490	490	504

			78N	78D	78E	78G	78H	78J
FZ375.	**R**	**22**	$305	345	345	345	345	355
		29	$310	350	350	350	350	360

			78K	84N	84D	84E	84F	84G
FZ375.	**R**	**22**	$355	310	350	350	360	350
		29	$360	315	355	355	365	355

			84H	84I	84J	84K	84L	96N
FZ375.	**R**	**22**	$350	360	360	360	370	330
		29	$355	365	365	365	375	335

		96D	96E	96F	96G	96H	96I
FZ375. R	**22**	$370	370	380	370	370	380
	29	$375	375	385	375	375	385

		96J	96K	96L
FZ375. R	**22**	$380	380	390
	29	$385	385	395

Step 6. Surface Finish

For painted (P)

8Q	folkstone grey A	+$0
91	white A	+$0
98	studio white A	+$0
CL	cool grey neutral A	+$0
G1	graphite A	+$0
WL	sandstone A	+$0
WN	warm grey neutral A	+$0

For painted (P)

CN	metallic champagne A	+$0
EH	metallic bronze A	+$0
MS	metallic silver A	+$0

For fabric (T) AND fabric, horizontal (R)

	22	29
Price Category 1	+$0	0
Price Category 2	+$13	19
Price Category 3	+$21	33
Price Category 4	+$33	51
Price Category 5	+$69	103
Price Category B	+$35	52
Price Category C	+$52	79
Price Category D	+$69	103
Price Category E	+$84	128
Price Category F	+$122	174
Price Category G	+$158	226

Step 7. Receptacle Trim Finish

For power/data cutouts at LH top of cladding (D), power/data cutouts at RH top of cladding (E), power/data cutouts in the LH and RH top of cladding (F), power/data cutouts at LH bottom of cladding (G), power/data cutouts at RH bottom of cladding (H), power/data cutouts in the LH top and bottom of cladding (J), power/data cutouts in the LH and RH bottom of cladding (I), power/data cutouts in the RH top and bottom of cladding (K), or power/data cutouts in the LH and RH top and bottom of cladding (L)

8Q	folkstone grey A	+$0
91	white A	+$0
98	studio white A	+$0
CL	cool grey neutral A	+$0
G1	graphite A	+$0
WL	sandstone A	+$0
WN	warm grey neutral A	+$0

Power Entry, Internal Direct Connect - Floor FZ144.

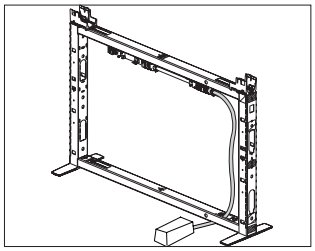

Product Information

Description

This power entry connects a building's electrical supply from a wall, floor or column to a powered frame. It enters the frame through one of the rectangular cutouts in the bottom rail of the frame. The power entry plugs into the side of a power harness and includes a cable that can be field cut to the appropriate length. Power entry is UL listed and Canadian UL listed.

Notes

Power entry does not take up a receptacle location when connecting to the frame harness.

Power entry connects directly to the harness (FZ150.) in the top or bottom power location.

Power entry cannot route through a connector.

For an application using to-the-floor tiles (FZ375.), order power entry, external direct connect (FZ140.).

Licensed electrician must wire power entry.

PVC coated liquid tight conduit.

Dimensions

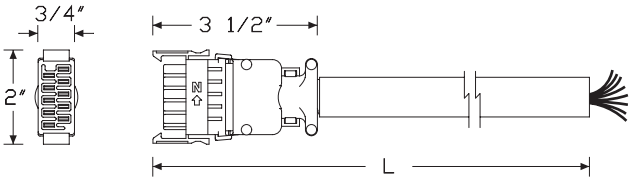

Specification Information

Step 1.

FZ144. A

Step 2. Configuration

08 8-wire, 4-circuit, shared neutral A

10 10-wire, 4-circuit, separate neutrals A

Step 3. Length

06 6' long A

12 12' long A

18 18' long A

24 24' long A

Prices for Steps 1-3.

		06	12	18	24
FZ144.	**08**	$245	264	325	387
	10	$245	264	325	387

Power Entry, External Direct Connect FZ140.

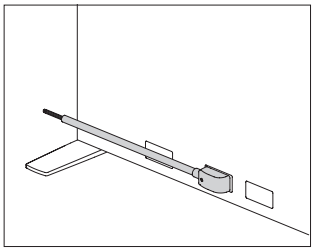

Product Information

Description

This power entry connects a building's electrical supply from a wall, floor, or column to a frame's power harness. It plugs directly into a receptacle location to distribute up to 4 20-amp circuits. The power entry is manufactured in a right-hand direction but can be field converted to a left-hand direction. The cable is available in 4 lengths and can be field cut to the appropriate length. Power entry is UL listed and Canadian UL listed.

Notes

Power entry uses 1 receptacle location.

Licensed electrician must wire power entry.

PVC coated liquid tight conduit.

Dimensions

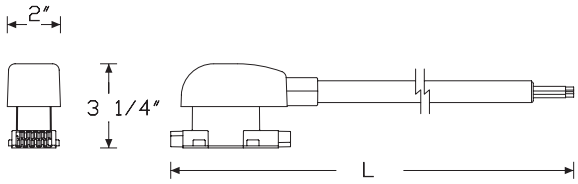

Specification Information

Step 1.

FZ140. A

Step 2. Configuration

08 8-wire, 4-circuit, shared neutral A

10 10-wire, 4-circuit, separate neutrals A

Step 3. Length

06 6′ long A

12 12′ long A

18 18′ long A

24 24′ long A

Prices for Steps 1-3.

		06	12	18	24
FZ140.	**08**	$200	266	339	410
	10	$200	266	339	410

Power Entry, New York - Floor FZ141.

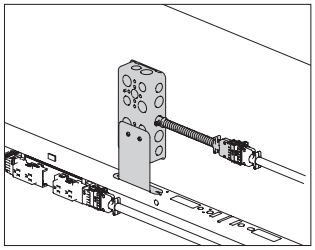

Product Information

Description

This floor power entry connects a building's electrical supply from a wall, floor or column to the power harness. It connects to the modular connection location on the end of a power harness, and includes a junction box. Power entry is UL listed and Canadian UL listed.

Notes

Licensed electrician must wire power entry.

Power entry uses 1 modular connection location on each end of adjacent power harnesses (FZ150.).

Power harness (FZ150.) is required. Order separately.

Dimensions

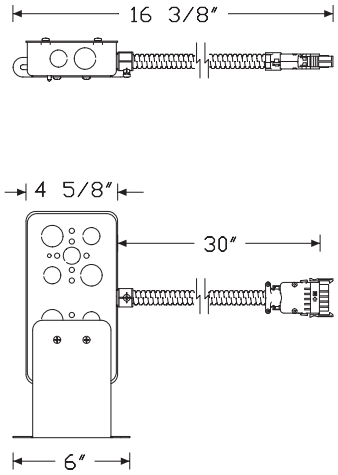

Specification Information

Step 1.

FZ141. A

Step 2. Configuration

08	8-wire, 4-circuit, shared neutral A
10	10-wire, 4-circuit, separate neutrals A

Prices for Steps 1-2.

FZ141.	**08**	$381
	10	$381

Power Entry - Ceiling FZ142.

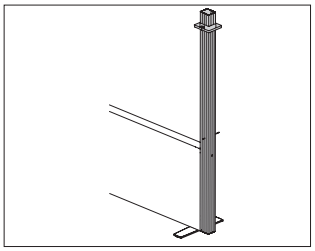

Product Information

Description

This power entry connects a ceiling electrical supply to the end of a frame. It distributes up to 4 20-amp circuits. The power entry comes with a 10'-high pole that can be field cut to the appropriate length, ceiling trim, connecting hardware conduit, and factory supplied electrical harness. Power entry plugs into the end of the harness. Power entry is UL listed and Canadian UL listed.

Notes

When using ceiling power entry on end of run, finished end is not required.

Power entry uses 1 modular connection location on each end of adjacent power harnesses (FZ150.).

Licensed electrician must wire power entry.

Power harness (FZ150.) is required. Order separately.

Dimensions

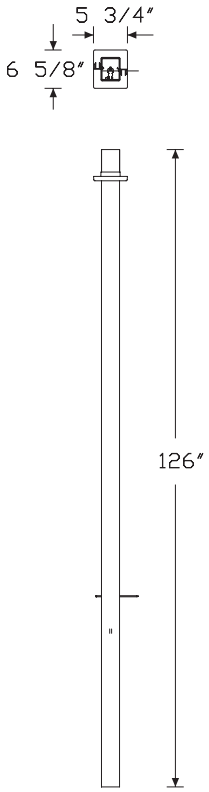

Specification Information

Step 1.

FZ142. A

Step 2. Frame Height

22	22" high A
29	29" high A

Step 3. Base Option

A	open base A
B	to-the-floor A

Step 4. Power Connection

08	8-wire, 4-circuit, shared neutral A
10	10-wire, 4-circuit, separate neutrals A
N	nonpowered A

Prices for Steps 1-4.

			08	10	N
FZ142.	**22**	**A**	$785	785	439
		B	$785	785	439
	29	**A**	$785	785	439
		B	$785	785	439

Step 5. Finish

8Q	folkstone grey A	+$0
91	white A	+$0
98	studio white A	+$0
CL	cool grey neutral A	+$0
G1	graphite A	+$0
WL	sandstone A	+$0
WN	warm grey neutral A	+$0

Power Harness FZ150.

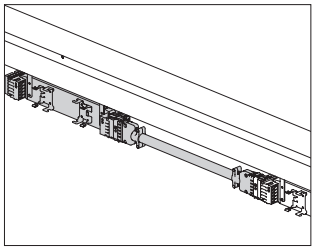

Product Information

Description

This power harness converts a nonpowered frame to a powered frame at the top and/or base location. 36"-54" wide harnesses have up to 4 20-amp circuits and provide up to 4 receptacle locations on each side of the frame. 60"-96" wide harnesses have up to 4 20-amp circuits and provide up to 8 receptacle locations on each side of the frame. Harness is UL listed and Canadian UL listed.

Notes

Specify width of power harness to match width of channel structure.

Specify 1 harness to fill a top power location.

Specify 1 harness to fill a bottom power location.

To connect harnesses through frames, specify power jumpers (FZ154.) separately.

36"-54" wide harnesses have up to 4 20-amp circuits and provide up to 4 receptacle locations on each side of the frame.

60"-96" wide harnesses have up to 4 20-amp circuits and provide up to 8 receptacle locations on each side of the frame.

When using an 84"-wide tile, specify 1 84"-wide harness.

When using a 96"-wide tile, specify 1 96"-wide harness.

Dimensions

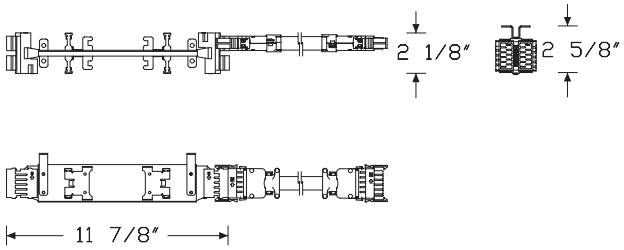

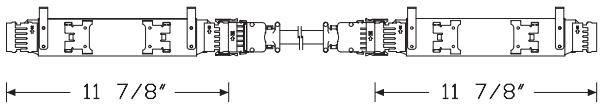

Specification Information

Step 1.

FZ150. A

Step 2. Configuration

08	8-wire, 4-circuit, shared neutral A
10	10-wire, 4-circuit, separate neutrals A

Step 3. Frame Width

36	36" wide A
42	42" wide A
48	48" wide A
54	54" wide A
60	60" wide A
66	66" wide A
72	72" wide A
84	84" wide A
96	96" wide A

Prices for Steps 1-3.

		36	42	48	54	60	66
FZ150.	**08**	$155	165	185	205	245	265
	10	$155	165	185	205	245	265

		72	84	96
FZ150.	**08**	$285	325	365
	10	$285	325	365

Power Jumper FZ154.

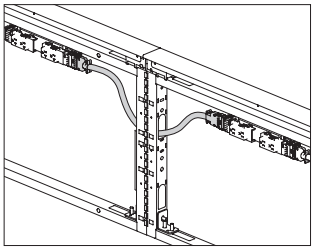

Product Information

Description

This power jumper connects power horizontally or vertically from 1 power harness to another. It connects power within a frame or between adjacent frames. The power jumper connects into the end of a harness; it does not connect into a receptacle location. Power jumper is UL listed and Canadian UL listed.

Notes

Jumpers are optimized in length to run through 90° and 120° connectors.

Order power harness (FZ150.) separately.

Dimensions

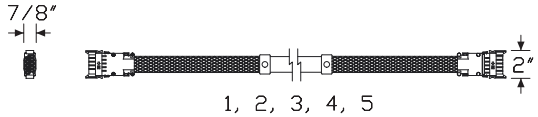

Specification Information

Step 1.

FZ154. A

Step 2. Configuration

08 8-wire, 4-circuit, shared neutral A

10 10-wire, 4-circuit, separate neutrals A

Step 3. Usage

1 inline jumper, frame to frame A

2 inline jumper for use through a 24″ frame A

3 inline jumper for use through a 30″ frame A

4 vertical jumper, within frame, top to bottom A

5 vertical jumper, adjacent frames, top to bottom A

Prices for Steps 1-3.

		1	2	3	4	5
FZ154.	**08**	$114	130	140	114	124
	10	$114	130	140	114	124

Receptacle, 4-Circuit, 15 amp (package of 6) FZ152.

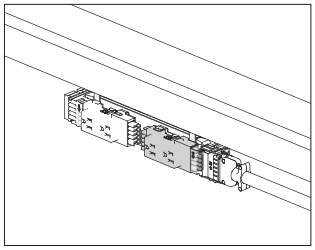

Product Information

Description

This receptacle locks into the power harness of a frame. It is UL listed and Canadian UL listed. Package contains 6 receptacles.

Dimensions

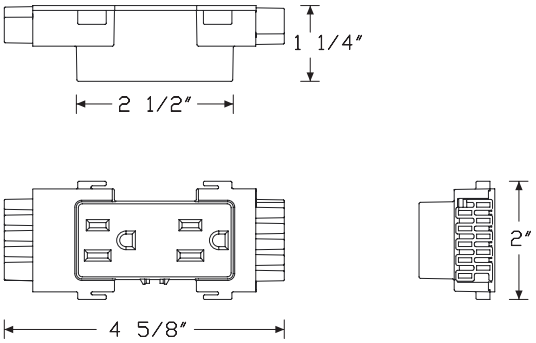

Specification Information

Step 1.

FZ152. A

Step 2. Type

AN	8-wire duplex, shared neutral, circuit a A
BN	8-wire duplex, shared neutral, circuit b A
CN	8-wire duplex, shared neutral, circuit c A
DN	8-wire duplex, shared neutral, circuit d A
AG	8-wire duplex, shared neutral, circuit a, isolated ground A
BG	8-wire duplex, shared neutral, circuit b, isolated ground A
CG	8-wire duplex, shared neutral, circuit c, isolated ground A
DG	8-wire duplex, shared neutral, circuit d, isolated ground A
1N	10-wire duplex, separate neutrals, circuit 1 A
2N	10-wire duplex, separate neutrals, circuit 2 A
3N	10-wire duplex, separate neutrals, circuit 3 A
4N	10-wire duplex, separate neutrals, circuit 4 A
1G	10-wire duplex, separate neutrals, circuit 1, isolated ground A
2G	10-wire duplex, separate neutrals, circuit 2, isolated ground A
3G	10-wire duplex, separate neutrals, circuit 3, isolated ground A
4G	10-wire duplex, separate neutrals, circuit 4, isolated ground A

Prices for Steps 1-2.

FZ152.	**AN**	$182
	BN	$182
	CN	$182
	DN	$182
	AG	$182
	BG	$182
	CG	$182
	DG	$182
	1N	$182
	2N	$182
	3N	$182
	4N	$182
	1G	$182
	2G	$182
	3G	$182
	4G	$182

Receptacle, 4-Circuit, 15 amp (package of 6) *continued*

Step 3. Finish		
8Q	folkstone grey A	+$0
91	white A	+$0
98	studio white A	+$0
CL	cool grey neutral A	+$0
G1	graphite A	+$0
WL	sandstone A	+$0
WN	warm grey neutral A	+$0

Controlled Receptacle, 4-Circuit, 15 amp (package of 6) FZ152M

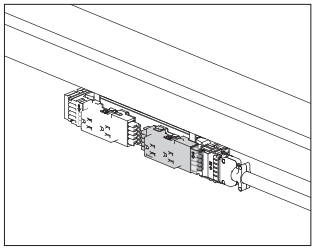

Product Information

Description

This receptacle is to be used for ASHRAE90.1 and Title 24 compliance. A controlled receptacle should be used for any receptacles that are under automated control by the energy management system. The receptacle locks into the power harness of a frame. Package contains 6 receptacles. It is UL listed and Canadian UL listed.

Dimensions

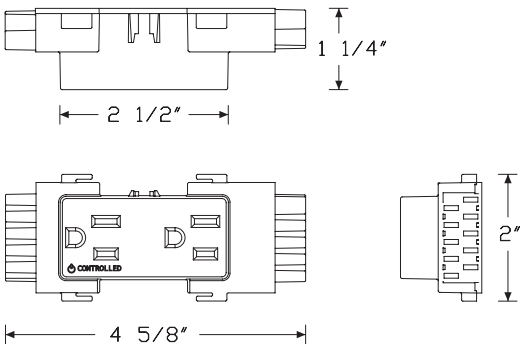

Specification Information

Step 1.

FZ152M. A

Step 2. Type

AN	8-wire duplex, shared neutral, circuit a A
BN	8-wire duplex, shared neutral, circuit b A
CN	8-wire duplex, shared neutral, circuit c A
DN	8-wire duplex, shared neutral, circuit d A
AG	8-wire duplex, shared neutral, circuit a, isolated ground A
BG	8-wire duplex, shared neutral, circuit b, isolated ground A
CG	8-wire duplex, shared neutral, circuit c, isolated ground A
DG	8-wire duplex, shared neutral, circuit d, isolated ground A
1N	10-wire duplex, separate neutrals, circuit 1 A
2N	10-wire duplex, separate neutrals, circuit 2 A
3N	10-wire duplex, separate neutrals, circuit 3 A
4N	10-wire duplex, separate neutrals, circuit 4 A
1G	10-wire duplex, separate neutrals, circuit 1, isolated ground A
2G	10-wire duplex, separate neutrals, circuit 2, isolated ground A
3G	10-wire duplex, separate neutrals, circuit 3, isolated ground A
4G	10-wire duplex, separate neutrals, circuit 4, isolated ground A

Prices for Steps 1-2.

FZ152M.	**AN**	$182
	BN	$182
	CN	$182
	DN	$182
	AG	$182
	BG	$182
	CG	$182
	DG	$182
	1N	$182
	2N	$182
	3N	$182
	4N	$182
	1G	$182
	2G	$182
	3G	$182
	4G	$182

Controlled Receptacle, 4-Circuit, 15 amp (package of 6) *continued*

Step 3. Finish		
8Q	folkstone grey A	+$0
91	white A	+$0
98	studio white A	+$0
CL	cool grey neutral A	+$0
G1	graphite A	+$0
WL	sandstone A	+$0
WN	warm grey neutral A	+$0

Receptacle, 4-Circuit, 20 amp FZ153.

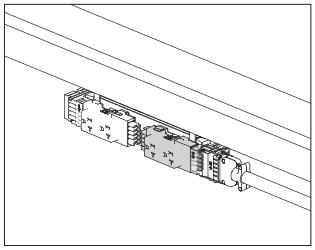

Product Information

Description

This receptacle snaps into an 8-wire, 4-circuit, shared neutral power harness or a 10-wire, 4-circuit, separate neutral power harness to provide power to equipment with a 20-amp standard plug head or cap. It also accepts 15-amp standard plug heads or caps. Package contains 1 receptacle. Receptacle is UL listed.

Notes

Avoid overloading circuit by ensuring total connected load does not exceed 16 amps. If 1 piece of equipment requires all available power, do not use receptacle's second outlet or install additional receptacles on that circuit. In many cases, equipment requiring this receptacle will use all available power.

Dimensions

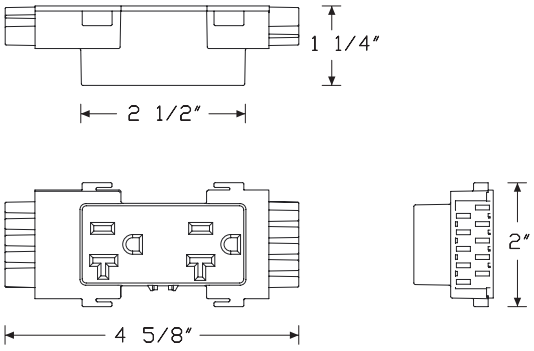

Specification Information

Step 1.

FZ153. A

Step 2. Type

AN	8-wire duplex, shared neutral, circuit a A
BN	8-wire duplex, shared neutral, circuit b A
AG	8-wire duplex, shared neutral, circuit a, isolated ground A
BG	8-wire duplex, shared neutral, circuit b, isolated ground A
1N	10-wire duplex, separate neutrals, circuit 1 A
2N	10-wire duplex, separate neutrals, circuit 2 A
1G	10-wire duplex, separate neutrals, circuit 1, isolated ground A
2G	10-wire duplex, separate neutrals, circuit 2, isolated ground A

Prices for Steps 1-2.

FZ153.	**AN**	$47
	BN	$47
	AG	$47
	BG	$47
	1N	$47
	2N	$47
	1G	$47
	2G	$47

Step 3. Finish

8Q	folkstone grey A	+$0
91	white A	+$0
98	studio white A	+$0
CL	cool grey neutral A	+$0
G1	graphite A	+$0
WL	sandstone A	+$0
WN	warm grey neutral A	+$0

Controlled Receptacle, 4-Circuit, 20 amp FZ153M

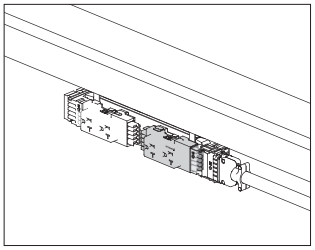

Product Information

Description

This receptacle is to be used for ASHRAE90.1 and Title 24 compliance. A controlled receptacle should be used for any receptacles that are under automated control by the energy management system. This receptacle snaps into an 8-wire, 4-circuit, shared neutral power harness or a 10-wire, 4-circuit, separate neutral power harness to provide power to equipment with a 20-amp standard plug head or cap. It also accepts 15-amp standard plug heads or caps. Package contains 1 receptacle. Receptacle is UL listed.

Notes

Avoid overloading circuit by ensuring total connected load does not exceed 16 amps. If 1 piece of equipment requires all available power, do not use receptacle's second outlet or install additional receptacles on that circuit. In many cases, equipment requiring this receptacle will use all available power.

Dimensions

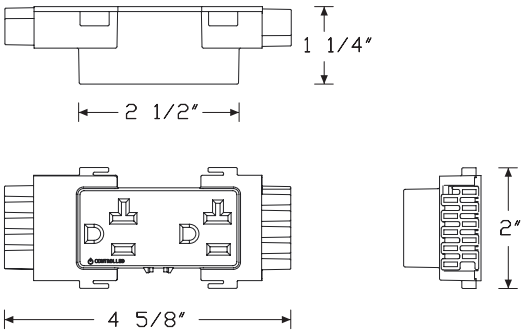

Specification Information

Step 1.

FZ153M. A

Step 2. Type

AN	8-wire duplex, shared neutral, circuit a A
BN	8-wire duplex, shared neutral, circuit b A
AG	8-wire duplex, shared neutral, circuit a, isolated ground A
BG	8-wire duplex, shared neutral, circuit b, isolated ground A
1N	10-wire duplex, separate neutrals, circuit 1 A
2N	10-wire duplex, separate neutrals, circuit 2 A
1G	10-wire duplex, separate neutrals, circuit 1, isolated ground A
2G	10-wire duplex, separate neutrals, circuit 2, isolated ground A

Prices for Steps 1-2.

FZ153M.	**AN**	$47
	BN	$47
	AG	$47
	BG	$47
	1N	$47
	2N	$47
	1G	$47
	2G	$47

Step 3. Finish

8Q	folkstone grey A	+$0
91	white A	+$0
98	studio white A	+$0
CL	cool grey neutral A	+$0
G1	graphite A	+$0
WL	sandstone A	+$0
WN	warm grey neutral A	+$0

Pari Screen, Frame Top FZ115.

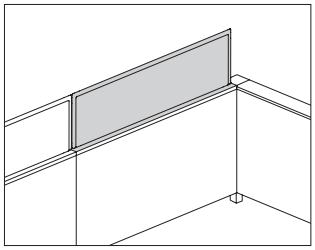

Product Information

Description

This tackable screen attaches to the top of a 22"-high or 29"-high Channel frame to extend the overall height and provide boundary. Bayonets extend through the top cap for attachment, allowing the screen to sit cleanly on the top cap. Frame top cap and attachment hardware included.

Notes

Specify width of screen to match the width of frame.

Screen comes with metal alignment piece that attaches into the top of 2 screens to align them along a run.

Screen accepts Customer's Own Material (COM). Yardage is estimated for directional, 54"-wide fabrics.

For vertical fabric direction (T) with 22"-high frame (22):

Height—Yardage

20"—1.58

24"—1.83

31"—2.27

35"—2.58

For vertical fabric direction (T) with 29"-high frame (29):

Height—Yardage

13"—1.17

17"—1.42

24"—1.83

28"—2.14

For horizontal fabric direction (R):

Width—Yardage

24"—1.89

30"—2.27

36"—2.65

42"—3.02

48"—3.40

54"—3.78

60"—4.16

66"—4.54

72"—4.91

For information on multiple quantities or directional fabrics, contact COM Department. See Order Information in appendices.

Dimensions

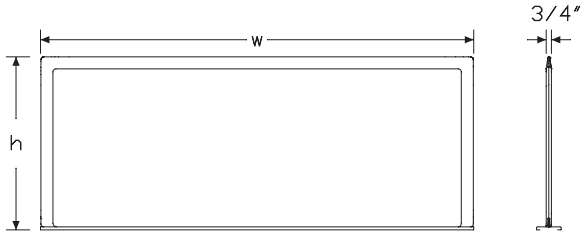

Specification Information

Step 1.

FZ115.

Step 2. Type

F fabric

Step 3. Frame Height

22 use with 22"-high frames
29 use with 29"-high frames

Step 4. Screen Height

For use with 22"-high frames (22)

20 20" high
24 24" high
31 31" high
35 35" high

For use with 29"-high frames (29)

13 13" high
17 17" high
24 24" high
28 28" high

Step 5. Width

24 24" wide
30 30" wide
36 36" wide
42 42" wide
48 48" wide
54 54" wide
60 60" wide
66 66" wide
72 72" wide

Step 6. Surface Material

For 24" wide (24), 30" wide (30), 36" wide (36), 42" wide (42), or 48" wide (48)

T tackable fabric
R tackable fabric, horizontal

For 54" wide (54), 60" wide (60), 66" wide (66), or 72" wide (72)

R tackable fabric, horizontal

Step 7. Top Cap Material

A painted architectural top cap
P painted standard top cap

Prices for Steps 1-7.

		1324TA	1324TP	1324RA	1324RP	1330TA	1330TP
FZ115. F	**29**	$747	713	747	713	792	750

		1330RA	1330RP	1336TA	1336TP	1336RA	1336RP
FZ115. F	**29**	$792	750	846	799	846	799

		1342TA	1342TP	1342RA	1342RP	1348TA	1348TP
FZ115. F	**29**	$896	842	896	842	936	869

		1348RA	1348RP	1354RA	1354RP	1360RA	1360RP
FZ115. F	**29**	$936	869	970	903	1025	955

		1366RA	1366RP	1372RA	1372RP	2024TA	2024TP
FZ115. F	**22**	—	—	—	—	$824	786
	29	$1079	1003	1139	1059	—	—

		2024RA	2024RP	2030TA	2030TP	2030RA	2030RP
FZ115. F	**22**	$824	786	873	827	873	827

		2036TA	2036TP	2036RA	2036RP	2042TA	2042TP
FZ115. F	**22**	$933	881	933	881	988	928

		2042RA	2042RP	2048TA	2048TP	2048RA	2048RP
FZ115. F	**22**	$988	928	1031	958	1031	958

		2054RA	2054RP	2060RA	2060RP	2066RA	2066RP
FZ115. F	**22**	$1132	1053	1195	1114	1259	1170

		2072RA	2072RP	1724TA	1724TP	1724RA	1724RP
FZ115. F	**22**	$1328	1236	—	—	—	—
	29	—	—	$785	748	785	748

		1730TA	1730TP	1730RA	1730RP	1736TA	1736TP
FZ115. F	**29**	$832	788	832	788	889	839

		1736RA	1736RP	1742TA	1742TP	1742RA	1742RP
FZ115. F	**29**	$889	839	941	884	941	884

		1748TA	1748TP	1748RA	1748RP	1754RA	1754RP
FZ115. F	**29**	$982	913	982	913	1048	975

		1760RA	1760RP	1766RA	1766RP	1772RA	1772RP
FZ115. F	**29**	$1107	1032	1165	1083	1230	1144

		2424TA	2424TP	2424RA	2424RP	2430TA	2430TP
FZ115. F	**22**	$865	825	865	825	917	869
	29	$865	825	865	825	917	869

		2430RA	2430RP	2436TA	2436TP	2436RA	2436RP
FZ115. F	**22**	$917	869	980	925	980	925
	29	$917	869	980	925	980	925

		2442TA	2442TP	2442RA	2442RP	2448TA	2448TP
FZ115. F	**22**	$1037	974	1037	974	1083	1006
	29	$1037	974	1037	974	1083	1006

		2448RA	2448RP	2454RA	2454RP	2460RA	2460RP
FZ115. F	**22**	$1083	1006	1188	1106	1255	1170
	29	$1083	1006	1188	1106	1255	1170

		2466RA	2466RP	2472RA	2472RP	3124TA	3124TP
FZ115. F	**22**	$1322	1228	1394	1297	954	910
	29	$1322	1228	1394	1297	—	—

		3124RA	3124RP	3130TA	3130TP	3130RA	3130RP
FZ115. F	**22**	$954	910	1011	958	1011	958

		3136TA	3136TP	3136RA	3136RP	3142TA	3142TP
FZ115. F	**22**	$1080	1020	1080	1020	1143	1074

		3142RA	3142RP	3148TA	3148TP	3148RA	3148RP
FZ115. F	**22**	$1143	1074	1194	1109	1194	1109

		3154RA	3154RP	3160RA	3160RP	3166RA	3166RP
FZ115. F	**22**	$1310	1219	1384	1290	1457	1354

		3172RA	3172RP	2824TA	2824TP	2824RA	2824RP
FZ115. F	**22**	$1537	1430	—	—	—	—
	29	—	—	$909	866	909	866

		2830TA	2830TP	2830RA	2830RP	2836TA	2836TP
FZ115. F	**29**	$963	912	963	912	1029	971

		2836RA	2836RP	2842TA	2842TP	2842RA	2842RP
FZ115. F	**29**	$1029	971	1089	1023	1089	1023

		2848TA	2848TP	2848RA	2848RP	2854RA	2854RP
FZ115. F	**29**	$1137	1057	1137	1057	1248	1161

		2860RA	2860RP	2866RA	2866RP	2872RA	2872RP
FZ115. F	**29**	$1318	1229	1388	1290	1464	1362

		3524TA	3524TP	3524RA	3524RP	3530TA	3530TP
FZ115. F	**22**	$1002	955	1002	955	1061	1006

		3530RA	3530RP	3536TA	3536TP	3536RA	3536RP
FZ115. F	**22**	$1061	1006	1134	1071	1134	1071

		3542TA	3542TP	3542RA	3542RP	3548TA	3548TP
FZ115. F	**22**	$1201	1128	1201	1128	1254	1165

		3548RA	3548RP	3554RA	3554RP	3560RA	3560RP
FZ115. F	**22**	$1254	1165	1376	1280	1453	1354

		3566RA	3566RP	3572RA	3572RP
FZ115. F	**22**	$1530	1422	1614	1502

Step 8. Top Cap Finish		
8Q	folkstone grey	+$0
91	white	+$0
98	studio white	+$0
CL	cool grey neutral	+$0
G1	graphite	+$0
WL	sandstone	+$0
WN	warm grey neutral	+$0
CN	metallic champagne	+$0
EH	metallic bronze	+$0
MS	metallic silver	+$0

Step 9. Fabric

	24	**30**	**36**	**42**	**48**
Price Category 1	+$0	0	0	0	0
Price Category 2	+$15	15	23	23	23
Price Category 3	+$35	35	54	54	54
Price Category 4	+$61	61	94	94	94
Price Category E	+$124	124	172	172	172

	54	**60**	**66**	**72**
Price Category 1	+$0	0	0	0
Price Category 2	+$27	27	33	33
Price Category 3	+$65	65	78	78
Price Category 4	+$113	113	135	135
Price Category E	+$172	172	197	197

Flat Edge Screen, Frame Top FZ116.

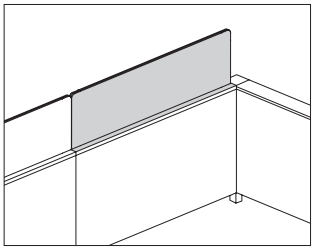

Product Information

Description

This tackable screen attaches to the top of a 22″-high or 29″-high Channel frame to extend the overall height and provide boundary. Bayonets extend through the top cap for attachment, allowing the screen to sit cleanly on the top cap. Frame top cap and attachment hardware included.

Notes

Specify width of screen to match the width of frame.

Screen accepts Customer's Own Material (COM). Yardage is estimated for directional, 54″-wide fabrics.

For vertical fabric direction (T) with 22″-high frame (22):

Height—Yardage

20″—1.58

24″—1.83

31″—2.27

35″—2.58

For vertical fabric direction (T) with 29″-high frame (29):

Height—Yardage

13″—1.17

17″—1.42

24″—1.83

28″—2.14

For horizontal fabric direction (R):

Width—Yardage

24″—1.89

30″—2.27

36″—2.65

42″—3.02

48″—3.40

54″—3.78

60″—4.16

66″—4.54

72″—4.91

For information on multiple quantities or directional fabrics, contact COM Department. See Order Information in appendices.

Dimensions

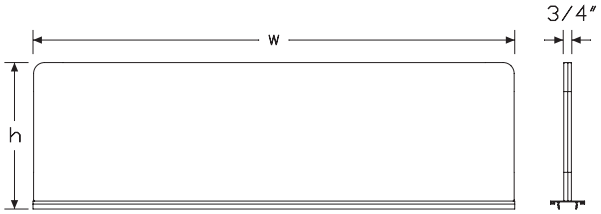

Flat Edge Screen, Frame Top

continued

Specification Information

Step 1.

FZ116. A

Step 2. Type

F fabric A

Step 3. Frame Height

22 22" high A
29 29" high A

Step 4. Screen Height

For 22" high (22)

20 20" high A
24 24" high A
31 31" high A
35 35" high A

For 29" high (29)

13 13" high A
17 17" high A
24 24" high A
28 28" high A

Step 5. Width

24 24" wide A
30 30" wide A
36 36" wide A
42 42" wide A
48 48" wide A
54 54" wide A
60 60" wide A
66 66" wide A
72 72" wide A

Step 6. Surface Material

For 24" wide (24), 30" wide (30), 36" wide (36), 42" wide (42), or 48" wide (48)

T tackable fabric A
R tackable fabric, horizontal A

For 54" wide (54), 60" wide (60), 66" wide (66), or 72" wide (72)

R tackable fabric, horizontal A

Step 7. Top Cap Material

A painted architectural top cap A
P painted standard top cap A

Prices for Steps 1-7.

		1324TA	1324TP	1324RA	1324RP	1330TA	1330TP
FZ116. F	**29**	$598	570	598	570	634	600

		1330RA	1330RP	1336TA	1336TP	1336RA	1336RP
FZ116. F	**29**	$634	600	677	639	677	639

		1342TA	1342TP	1342RA	1342RP	1348TA	1348TP
FZ116. F	**29**	$717	673	717	673	748	695

		1348RA	1348RP	1354RA	1354RP	1360RA	1360RP
FZ116. F	**29**	$748	695	776	722	820	764

		1366RA	1366RP	1372RA	1372RP	2024TA	2024TP
FZ116. F	**22**	—	—	—	—	$659	629
	29	$863	802	911	847	—	—

		2024RA	2024RP	2030TA	2030TP	2030RA	2030RP
FZ116. F	**22**	$659	629	699	662	699	662

		2036TA	2036TP	2036RA	2036RP	2042TA	2042TP
FZ116. F	**22**	$747	705	747	705	790	742

		2042RA	2042RP	2048TA	2048TP	2048RA	2048RP
FZ116. F	**22**	$790	742	825	767	825	767

		2054RA	2054RP	2060RA	2060RP	2066RA	2066RP
FZ116. F	**22**	$905	842	956	891	1007	936

		2072RA	2072RP	1724TA	1724TP	1724RA	1724RP
FZ116. F	**22**	$1062	988	—	—	—	—
	29	—	—	$628	599	628	599

		1730TA	1730TP	1730RA	1730RP	1736TA	1736TP
FZ116. F	**29**	$665	630	665	630	711	671

		1736RA	1736RP	1742TA	1742TP	1742RA	1742RP
FZ116. F	**29**	$711	671	753	707	753	707

		1748TA	1748TP	1748RA	1748RP	1754RA	1754RP
FZ116. F	**29**	$786	730	786	730	838	780

Flat Edge Screen, Frame Top

continued

		1760RA	1760RP	1766RA	1766RP	1772RA	1772RP
FZ116. F	**29**	$885	825	932	866	984	915

		2424TA	2424TP	2424RA	2424RP	2430TA	2430TP
FZ116. F	**22**	$692	660	692	660	733	695
	29	$692	660	692	660	733	695

		2430RA	2430RP	2436TA	2436TP	2436RA	2436RP
FZ116. F	**22**	$733	695	784	740	784	740
	29	$733	695	784	740	784	740

		2442TA	2442TP	2442RA	2442RP	2448TA	2448TP
FZ116. F	**22**	$830	779	830	779	866	805
	29	$830	779	830	779	866	805

		2448RA	2448RP	2454RA	2454RP	2460RA	2460RP
FZ116. F	**22**	$866	805	951	885	1004	936
	29	$866	805	951	885	1004	936

		2466RA	2466RP	2472RA	2472RP	3124TA	3124TP
FZ116. F	**22**	$1057	983	1115	1038	839	801
	29	$1057	983	1115	1038	—	—

		3124RA	3124RP	3130TA	3130TP	3130RA	3130RP
FZ116. F	**22**	$839	801	890	843	890	843

		3136TA	3136TP	3136RA	3136RP	3142TA	3142TP
FZ116. F	**22**	$951	897	951	897	1006	945

		3142RA	3142RP	3148TA	3148TP	3148RA	3148RP
FZ116. F	**22**	$1006	945	1051	976	1051	976

		3154RA	3154RP	3160RA	3160RP	3166RA	3166RP
FZ116. F	**22**	$1153	1073	1218	1135	1282	1192

		3172RA	3172RP	2824TA	2824TP	2824RA	2824RP
FZ116. F	**22**	$1353	1259	—	—	—	—
	29	—	—	$800	762	800	762

		2830TA	2830TP	2830RA	2830RP	2836TA	2836TP
FZ116. F	**29**	$847	803	847	803	905	855

		2836RA	2836RP	2842TA	2842TP	2842RA	2842RP
FZ116. F	**29**	$905	855	958	900	958	900

		2848TA	2848TP	2848RA	2848RP	2854RA	2854RP
FZ116. F	**29**	$1001	930	1001	930	1098	1022

		2860RA	2860RP	2866RA	2866RP	2872RA	2872RP
FZ116. F	**29**	$1160	1081	1221	1135	1288	1199

		3524TA	3524TP	3524RA	3524RP	3530TA	3530TP
FZ116. F	**22**	$881	841	881	841	934	885

		3530RA	3530RP	3536TA	3536TP	3536RA	3536RP
FZ116. F	**22**	$934	885	998	942	998	942

		3542TA	3542TP	3542RA	3542RP	3548TA	3548TP
FZ116. F	**22**	$1057	992	1057	992	1103	1025

		3548RA	3548RP	3554RA	3554RP	3560RA	3560RP
FZ116. F	**22**	$1103	1025	1210	1126	1278	1192

		3566RA	3566RP	3572RA	3572RP
FZ116. F	**22**	$1346	1251	1420	1322

Step 8. Top Cap Finish		
8Q	folkstone grey A	+$0
91	white A	+$0
98	studio white A	+$0
CL	cool grey neutral A	+$0
CN	metallic champagne A	+$0
EH	metallic bronze A	+$0
G1	graphite A	+$0
MS	metallic silver A	+$0
WL	sandstone A	+$0
WN	warm grey neutral A	+$0

Step 9. Fabric

	24	30	36	42	48
Price Category 1	+$0	0	0	0	0
Price Category 2	+$15	15	23	23	23
Price Category 3	+$35	35	54	54	54
Price Category 4	+$61	61	94	94	94
Price Category E	+$124	124	172	172	172

	54	60	66	72
Price Category 1	+$0	0	0	0
Price Category 2	+$27	27	33	33
Price Category 3	+$65	65	78	78
Price Category 4	+$113	113	135	135
Price Category E	+$172	172	197	197

Glass Screen, Frame Top FZ114.

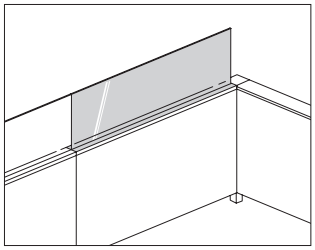

Product Information

Description

This glass screen attaches to the top of a frame to increase the overall height. It has concealed attachment brackets that eliminate the gap between the top of the frame and bottom of the screen. Frame top cap and attachment hardware included.

Notes

Specify width of screen to match the width of 1 frame, or the combined width of 2 frames.

18"- to 48"-wide frame top screens can only span 1 frame. 54"-wide and wider screens can span 2 frames.

Dimensions

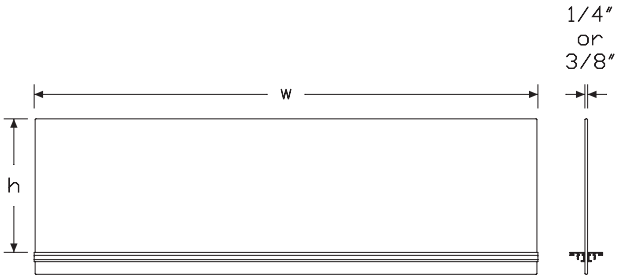

Specification Information

Step 1.

FZ114.

Step 2. Frame Height

22 use with 22"-high frames
29 use with 29"-high frames

Step 3. Screen Height

For use with 22"-high frames (22)

20 20" high
24 24" high

For use with 29"-high frames (29)

13 13" high
17 17" high

Step 4. Width

24 24" wide
30 30" wide
36 36" wide
42 42" wide
48 48" wide
54 54" wide
60 60" wide
66 66" wide
72 72" wide
78 78" wide
84 84" wide
96 96" wide

Step 5. Top Cap Material

A painted architectural top cap
P painted standard top cap

Step 6. Surface Finish

For 24" wide (24), 30" wide (30), 36" wide (36), 42" wide (42), 48" wide (48), 54" wide (54), or 60" wide (60) with painted architectural top cap (A)

TR clear glass - 1/4" thick A
5A opal etched - 1/4" thick A
NN no glass- for customer's own glass A
C3 clear glass - 3/8" thick A
G3 opal glass - 3/8" thick A
N3 no glass, for customer's own 3/8" thick glass A

For 24" wide (24), 30" wide (30), 36" wide (36), 42" wide (42), 48" wide (48), 54" wide (54), 60" wide (60), 66" wide (66), 72" wide (72), 78" wide (78), 84" wide (84), or 96" wide (96) with painted standard top cap (P)

TR	clear glass - 1/4" thick
5A	opal etched - 1/4" thick
NN	no glass- for customer's own glass

For 66" wide (66), 72" wide (72), 78" wide (78), 84" wide (84), or 96" wide (96) with painted architectural top cap (A)

TR	clear glass - 1/4" thick [A]
5A	opal etched - 1/4" thick [A]
NN	no glass- for customer's own glass [A]
N3	no glass, for customer's own 3/8" thick glass [A]

Prices for Steps 1-6.

			24ATR	24A5A	24ANN	24AC3	24AG3	24AN3
FZ114.	**22**	**20**	$437	569	243	555	714	243
		24	$467	621	243	595	779	243
	29	**13**	$377	465	243	475	584	243
		17	$407	517	243	515	649	243

			24PTR	24P5A	24PNN	30ATR	30A5A	30ANN
FZ114.	**22**	**20**	$384	512	189	466	618	272
		24	$414	562	189	496	670	272
	29	**13**	$324	412	189	406	514	272
		17	$354	462	189	436	566	272

			30AC3	30AG3	30AN3	30PTR	30P5A	30PNN
FZ114.	**22**	**20**	$591	778	272	406	555	211
		24	$631	843	272	436	605	211
	29	**13**	$511	648	272	346	455	211
		17	$551	713	272	376	505	211

			36ATR	36A5A	36ANN	36AC3	36AG3	36AN3
FZ114.	**22**	**20**	$499	687	300	631	858	300
		24	$529	739	300	671	923	300
	29	**13**	$439	583	300	551	728	300
		17	$469	635	300	591	793	300

			36PTR	36P5A	36PNN	42ATR	42A5A	42ANN
FZ114.	**22**	**20**	$432	615	232	537	762	329
		24	$462	665	232	567	814	329
	29	**13**	$372	515	232	477	658	329
		17	$402	565	232	507	710	329

			42AC3	42AG3	42AN3	42PTR	42P5A	42PNN
FZ114.	**22**	**20**	$679	954	329	461	684	254
		24	$719	1019	329	491	734	254
	29	**13**	$599	824	329	401	584	254
		17	$639	889	329	431	634	254

			48ATR	48A5A	48ANN	48AC3	48AG3	48AN3
FZ114.	**22**	**20**	$576	857	368	727	1074	368
		24	$606	909	368	767	1139	368
	29	**13**	$516	753	368	647	944	368
		17	$546	805	368	687	1009	368

			48PTR	48P5A	48PNN	54ATR	54A5A	54ANN
FZ114.	**22**	**20**	$491	769	284	606	902	397
		24	$521	819	284	636	954	397
	29	**13**	$431	669	284	546	798	397
		17	$461	719	284	576	850	397

			54AC3	54AG3	54AN3	54PTR	54P5A	54PNN
FZ114.	**22**	**20**	$767	1130	397	515	809	306
		24	$807	1195	397	545	859	306
	29	**13**	$687	1000	397	455	709	306
		17	$727	1065	397	485	759	306

			60ATR	60A5A	60ANN	60AC3	60AG3	60AN3
FZ114.	**22**	**20**	$636	947	426	807	1186	426
		24	$666	999	426	847	1251	426
	29	**13**	$576	843	426	727	1056	426
		17	$606	895	426	767	1121	426

			60PTR	60P5A	60PNN	66ATR	66A5A	66ANN
FZ114.	**22**	**20**	$539	849	328	666	992	454
		24	$569	899	328	696	1044	454
	29	**13**	$479	749	328	606	888	454
		17	$509	799	328	636	940	454

			66AN3	66PTR	66P5A	66PNN	72ATR	72A5A
FZ114.	**22**	**20**	$454	563	889	344	696	1037
		24	$454	593	939	344	726	1089
	29	**13**	$454	503	789	344	636	933
		17	$454	533	839	344	666	985

			72ANN	72AN3	72PTR	72P5A	72PNN	78ATR
FZ114.	**22**	**20**	$483	483	587	929	354	726
		24	$483	483	617	979	354	756
	29	**13**	$483	483	527	829	354	666
		17	$483	483	557	879	354	696

			78A5A	78ANN	78AN3	78PTR	78P5A	78PNN
FZ114.	**22**	**20**	$1082	512	512	611	969	374
		24	$1134	512	512	641	1019	374
	29	**13**	$978	512	512	558	935	374
		17	$1030	512	512	581	982	374

			84ATR	84A5A	84ANN	84AN3	84PTR	84P5A
FZ114.	**22**	**20**	$756	1127	541	541	635	1020
		24	$786	1179	541	541	665	1070
	29	**13**	$696	1023	541	541	595	991
		17	$726	1075	541	541	620	1031

			84PNN	96ATR	96A5A	96ANN	96AN3	96PTR
FZ114.	**22**	**20**	$390	786	1172	560	560	710
		24	$390	816	1224	560	560	740
	29	**13**	$390	726	1068	560	560	675
		17	$390	756	1120	560	560	703

			96P5A	96PNN
FZ114.	**22**	**20**	$1090	418
		24	$1140	418
	29	**13**	$1051	418
		17	$1082	418

Step 7. Top Cap Finish		
8Q	folkstone grey	+$0
91	white	+$0
98	studio white	+$0
CL	cool grey neutral	+$0
G1	graphite	+$0
WL	sandstone	+$0
WN	warm grey neutral	+$0
CN	metallic champagne	+$0
EH	metallic bronze	+$0
MS	metallic silver	+$0

Laminate Screen, Frame Top FZ120.

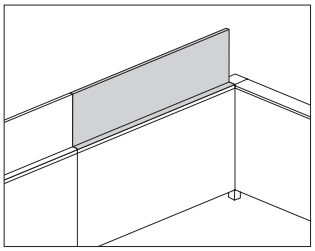

Product Information

Description

This laminate screen attaches to the top of the 22"-high or 29"-high Channel frame to extend the overall height and to provide boundary. Bayonets extend through the top cap for attachment, which allows the screen to sit cleanly on the top cap. Frame top cap and attachment hardware included.

Notes

Specify width of screen to match width of frame.

24"-72" wide screens must match width of Channel frame.

Dimensions

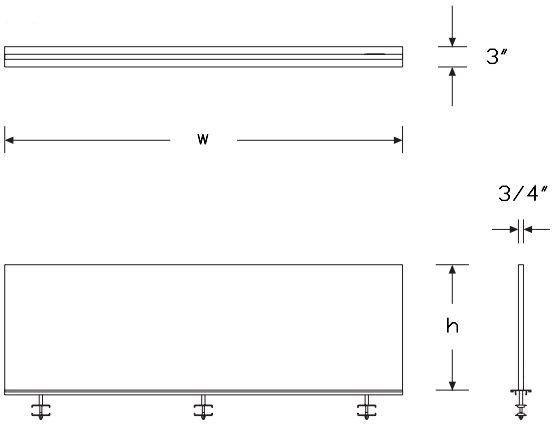

Specification Information

Step 1.

FZ120.

Step 2. For use with Frame Height

22 22" high
29 29" high

Step 3. Screen Height

For 22" high (22)

20 20" high
24 24" high

For 29" high (29)

13 13" high
17 17" high

Step 4. Width

24 24" wide
30 30" wide
36 36" wide
42 42" wide
48 48" wide
54 54" wide
60 60" wide
66 66" wide
72 72" wide

Step 5. Surface Material

L laminate/thermoplastic edge
U laminate/universal edge

Step 6. Top Cap Material

A painted architectural top cap
P painted standard top cap

Prices for Steps 1-6.

			24LA	24LP	24UA	24UP	30LA	30LP
FZ120.	**22**	**20**	$600	570	600	570	646	614
		24	$635	604	635	604	681	647
	29	**13**	$550	523	550	523	596	567
		17	$600	570	600	570	633	602

			30UA	30UP	36LA	36LP	36UA	36UP
FZ120.	**22**	**20**	$646	614	692	651	692	651
		24	$681	647	727	684	727	684

29	**13**	$596	567	616	580	616	580
	17	$633	602	666	627	666	627

			42LA	**42LP**	**42UA**	**42UP**	**48LA**	**48LP**
FZ120.	**22**	**20**	$738	694	738	694	784	730
		24	$773	727	773	727	819	762
	29	**13**	$649	611	649	611	682	635
		17	$699	658	699	658	732	681

			48UA	**48UP**	**54LA**	**54LP**	**54UA**	**54UP**
FZ120.	**22**	**20**	$784	730	830	772	830	772
		24	$819	762	865	805	865	805
	29	**13**	$682	635	715	665	715	665
		17	$732	681	765	712	765	712

			60LA	**60LP**	**60UA**	**60UP**	**66LA**	**66LP**
FZ120.	**22**	**20**	$875	814	875	814	895	833
		24	$911	848	911	848	931	866
	29	**13**	$748	696	748	696	781	727
		17	$798	743	798	743	831	773

			66UA	**66UP**	**72LA**	**72LP**	**72UA**	**72UP**
FZ120.	**22**	**20**	$895	833	915	851	915	851
		24	$931	866	951	885	951	885
	29	**13**	$781	727	814	758	814	758
		17	$831	773	864	804	864	804

Step 7. Grain Direction

For 24" wide (24), 30" wide (30), 36" wide (36), 42" wide (42), 48" wide (48), 54" wide (54), or 60" wide (60)

HRG	horizontal grain	+$0
VTG	vertical grain	+$0

For 66" wide (66) or 72" wide (72)

HRG	horizontal grain	+$0

Step 8. Top Cap Finish

8Q	folkstone grey	+$0
91	white	+$0
98	studio white	+$0
CL	cool grey neutral	+$0
G1	graphite	+$0
WL	sandstone	+$0
WN	warm grey neutral	+$0
CN	metallic champagne	+$0
EH	metallic bronze	+$0
MS	metallic silver	+$0

Step 9. Surface Finish

76	light brown walnut	+$0
8Q	folkstone grey	+$0
91	white	+$0
98	studio white	+$0
CL	cool grey neutral	+$0
HM	natural maple	+$0
HP	light anigre	+$0
HX	aged cherry	+$0
HY	walnut on cherry	+$0
LA	light ash	+$0
LBA	clear on ash	+$0
LBB	oak on ash	+$0
LBC	walnut on ash	+$0
LBD	dark brown walnut	+$0
LBE	medium red walnut	+$0
LBF	neutral twill	+$0
LBG	sarum twill	+$0
LBH	earthen twill	+$0
LBJ	graphite twill	+$0
LBK	pewter mesh	+$0
LBL	steel mesh	+$0
LBM	crisp linen	+$0
LBN	classic linen	+$0
LBP	casual linen	+$0
LBQ	white twill	+$0
LU	soft white	+$0
WL	sandstone	+$0
WN	warm grey neutral	+$0

Step 10. Edge Finish

For laminate/thermoplastic edge (L)

76	light brown walnut	+$0
8Q	folkstone grey	+$0

Laminate Screen, Frame Top

continued

91	white	+$0
98	studio white	+$0
BU	black umber	+$0
CL	cool grey neutral	+$0
HF	inner tone light	+$0
HM	natural maple	+$0
HP	light anigre	+$0
HX	aged cherry	+$0
HY	walnut on cherry	+$0
LA	light ash	+$0
LBA	clear on ash	+$0
LBB	oak on ash	+$0
LBC	walnut on ash	+$0
LBD	dark brown walnut	+$0
LBE	medium red walnut	+$0
LBF	neutral twill	+$0
LBG	sarum twill	+$0
LBH	earthen twill	+$0
LBJ	graphite twill	+$0
LBK	pewter mesh	+$0
LBL	steel mesh	+$0
LBM	crisp linen	+$0
LBN	classic linen	+$0
LBP	casual linen	+$0
LBQ	white twill	+$0
LBR	phantom ecru	+$0
LBS	phantom cocoa	+$0
LBU	medium matte walnut	+$0
LBV	warm grey teak	+$0
LU	soft white	+$0
MT	medium tone	+$0
WL	sandstone	+$0
WN	warm grey neutral	+$0

For laminate/universal edge (U)

PLY	plywood edge	+$50

Index by Product Name

Canvas Office Landscape® Channel	
90° Connector Cover	page(s) 20
90° Connector Cover, Architectural	21
90° Connector Top Cap	29
90° Connector Top Cap, Architectural	31
90° Universal Connector	18
120° Connector Cover	22
120° Connector Top Cap	32
120° Universal Connector	19
Controlled Receptacle, 4-Circuit, 15 amp (package of 6)	49
Controlled Receptacle, 4-Circuit, 20 amp	52
Counterweight	7
Finished End	23
Finished End, Architectural	24
Flat Edge Screen, Frame Top	56
Frame	5
Frame-to-Frame Connection Hardware	17
Gallery Panel, Channel Attached	8
Glass Screen, Frame Top	59
Laminate Screen, Frame Top	62
Non-Structural Foot	13
Open Base Tile	34
Pari Screen, Frame Top	53
Power Entry - Ceiling	44
Power Entry, External Direct Connect	42
Power Entry, Internal Direct Connect - Floor	41
Power Entry, New York - Floor	43
Power Harness	45
Power Jumper	46
Receptacle, 4-Circuit, 15 amp (package of 6)	47
Receptacle, 4-Circuit, 20 amp	51
Structural Foot	15
Top Cap	25
Top Cap, Architectural	27
To-The-Floor Tiles	37

Index by Product Number

FZ11A.	Top Cap, Architectural	page(s) 27
FZ12A.	90° Connector Top Cap, Architectural	31
FZ12B.	90° Connector Cover, Architectural	21
FZ16A.	Finished End, Architectural	24
FZ19D.	Counterweight	7
FZ110.	Frame	5
FZ112.	Top Cap	25
FZ113.	Gallery Panel, Channel Attached	8
FZ114.	Glass Screen, Frame Top	59
FZ115.	Pari Screen, Frame Top	53
FZ116.	Flat Edge Screen, Frame Top	56
FZ117.	Non-Structural Foot	13
FZ119.	Structural Foot	15
FZ120.	Laminate Screen, Frame Top	62
FZ121.	90° Universal Connector	18
FZ123.	90° Connector Cover	20
FZ126.	90° Connector Top Cap	29
FZ128.	Frame-to-Frame Connection Hardware	17
FZ131.	120° Universal Connector	19
FZ133.	120° Connector Cover	22
FZ136.	120° Connector Top Cap	32
FZ140.	Power Entry, External Direct Connect	42
FZ141.	Power Entry, New York - Floor	43
FZ142.	Power Entry - Ceiling	44
FZ144.	Power Entry, Internal Direct Connect - Floor	41
FZ150.	Power Harness	45
FZ152M	Controlled Receptacle, 4-Circuit, 15 amp (package of 6)	49
FZ152.	Receptacle, 4-Circuit, 15 amp (package of 6)	47
FZ153M	Controlled Receptacle, 4-Circuit, 20 amp	52
FZ153.	Receptacle, 4-Circuit, 20 amp	51
FZ154.	Power Jumper	46
FZ160.	Finished End	23
FZ170.	Open Base Tile	34
FZ375.	To-The-Floor Tiles	37

20-Day or Less/Assigned Lead-Time Order Information

20-Day or Less and Assigned Lead-Time Programs

20-day or less and assigned lead-time products are designed for established Herman Miller dealers with pre-approved credit.

Products are distributed from multiple manufacturing facilities across the United States. All products and options not designated by an Assigned Lead-Time icon A will ship in 20 business days or less after being acknowledged by Herman Miller. Products and options designated by an A are on the assigned lead-time program and will ship in 20 days, less than 20 days, or more than 20 days from order acknowledgement.

Ordering Procedure

Please place orders through Order Manager. If this is not available to you, place orders through mail or fax. Verbal purchase orders will not be accepted.

Order Entry fax number for Passage®, 5000 Series, and Meridian®
Filing and Storage: (616) 846 9236.
Order Entry fax number for all other products:
(616) 654 3085.

For more information, contact your Customer Care representative at: (866) 854 3048 EXT 3400.

Shipments and Delivery

Per Herman Miller Terms and Conditions.

Changes and Cancellation

Per Herman Miller Terms and Conditions.

Stain-to-Match Program

Program Overview

The Stain-to-Match program gives you the option of using veneer finishes that are not listed in the standard offering. The program allows Herman Miller to match a customer's existing recut or natural veneer, or create a new finish that is unique to an installation.

Specific information on approval, ordering, pricing, and warranty for the Stain-to-Match program is listed below. Questions and requests for assistance may be directed to Herman Miller Options at:

(800) 654 3910

Stain-to-Match Process

1. Fill out the Options Stain-to-Match Request Form and send along with a color sample (2" x 3" minimum) to the Herman Miller Options Applications Team at the address provided on the form. The form can be found on Omni.
2. Within 7-10 working days, Herman Miller Options will send a sample of the color-matched stain on Herman Miller veneer to the requester for the customer's signed approval.
3. If the sample meets the customer 's approval, sign the reverse side of the sample, scan and email the approval to:
   options@hermanmiller.com.
4. After the stain has been approved, a formal quotation with special number and pricing can be provided, or the product can be specified through the Vary Easy program, if available. Work with the Options team on final product needs and how to specify.
5. A purchase order can then be placed.

Stain-to-Match Warranty

Herman Miller warrants its products to be free from defects in craftsmanship from the date of delivery for the applicable warranty period. Herman Miller is responsible for the physical properties of the veneers available through the Stain-to-Match program, which include:

STA: Stain-to-Match on Recut Ash
STB: Stain-to-Match on Beech
STC: Stain-to-Match on Cherry
STD: Stain-to-Match on Oak
STK: Stain-to-Match on Reltech Anigre (Geiger)
STM: Stain-to-Match on Recut Mahogany
STP: Stain-to-Match on Maple
STU: Stain-to-Match on Walnut (Geiger)

See your specification tool for product specific finish offering limitations.

Customer's Own Material Order Information — Workspaces

Customer's Own Material

Program Overview

The Customer's Own Material (COM) program gives you the option of using textiles other than those listed. Herman Miller will test textiles for application to Herman Miller products and will process orders for those with approved COM textiles only. COM textiles are on assigned lead times.

Omni lists an overview of fabrics that have been tested and indicates whether or not they were approved for application to Herman Miller products.

Specific information on the terms and conditions, testing, approval, and ordering process for COM is listed below. Questions about the COM program and requests for assistance may be directed to your COM representative at:
(616) 654 3400
(866) 854 3048 EXT 6543400

Customer's Own Material Warranty

Herman Miller does not warrant COM textiles. COM textiles are tested for application only; they are not tested for performance. The Herman Miller warranty does apply to the underlying products.

Suppliers of COM textiles are responsible for color consistency within commercial tolerances, UV stability, and resistance to soiling and perspiration.

Customer's Own Material Pricing

COM is a Category 1 fabric. There are no application charges for COM fabrics.

Ordering and payment for COM textile yardage are the responsibility of the customer and the textile supplier.

If desired, Herman Miller will purchase COM textiles directly from True Textiles, C.F. Stinson, Luna Textiles, Maharam, and Momentum Textiles to simplify ordering and shipment. For this service, refer to the Supplier Connection program.

Application Note

Herman Miller does not guarantee that Customer's Own Material (COM) fabric patterns will align across panels/tiles or from one screen to the next. We also do not guarantee that COM fabric designs will be positioned consistently in the same location across several panels, tiles, or screens.

Textile Approval

1. Select a COM textile and a Herman Miller product.
2. If your textile is not listed in Omni, obtain a test number from a COM representative at (616) 654 3400. You can also submit your request within Omni. Please have the following information ready before calling: textile name, number, pattern, and the product you will apply it to.
3. Herman Miller will notify you of approval or disapproval within 4 days from receipt of the test yardage.

Ordering Products with COM

1. Refer to the specific products to determine the yardage required for COM textiles.
2. If your textile is not listed in Omni, call a COM representative at (616) 654 3400 or (866) 854 3048 EXT 6543400. The representative will assign an identification number for your textile (ID#) and will verify yardage requirements for your order.
   Note: Yardage requirements are based on nondirectional, 54"-wide textiles. 66"-wide textiles are needed for application on 60"-wide products. Additional yardage may be needed due to the unique characteristics of a textile.
3. Enter your order on Order Manager in Omni.
4. Upon receipt of your purchase order, Herman Miller will send you a PO acknowledgment.
5. Arrangements must be made for the textiles to be shipped from the supplier to Herman Miller for application to the Herman Miller products. Textiles must be tagged with the assigned identification number and the roll yardage quantity. See Omni for shipping procedures and current shipping addresses or contact a COM representative at (616) 654 3400 or (866) 854 3048 EXT 6543400.

   Products will be scheduled for production when COM textiles are received at Herman Miller. Standard lead times in effect at that time will apply.

   Note: If textiles are to be purchased directly by Herman Miller through the Supplier Connection program, Herman Miller will handle the ordering and shipping process and will schedule your order for production upon receipt of your purchase order (dependent on textile availability). Refer to the Supplier Connection program for more information.

Supplier Connection

Program Overview

The Supplier Connection program is a service offered by Herman Miller to purchase approved COM textiles directly from True Textiles, C.F. Stinson, Luna Textiles, Maharam, and Momentum Textiles. When you select a textile through this program, Herman Miller will facilitate the ordering, scheduling, and shipment of the textile directly with the supplier.

Suppliers included in the Supplier Connection program keep an active inventory of textiles that are pre-approved for application to Herman Miller products. Pre-approval applies only to the suitability of a textile for manufacturing and application to a Herman Miller product. Omni provides an overview of fabrics that have been tested and indicates whether or not they were approved for application to Herman Miller products.

Specific information on the terms and conditions, testing, approval, and ordering process for the Supplier Connection program is listed below. Questions and requests for assistance may be directed to your COM representative at:
(616) 654 3400
(866) 854 3048 EXT 6543400

Supplier Connection Warranty

Textiles purchased by Herman Miller through the Supplier Connection program are COM and are not warranted by Herman Miller. COM textiles are tested for application only; they are not tested for performance. The Herman Miller warranty does apply to the underlying products.

Suppliers of COM textiles are responsible for color consistency within commercial tolerances, UV stability, and resistance to soiling and perspiration.

Supplier Connection Pricing

Textiles purchased by Herman Miller through the Supplier Connection program are COM. COM is a Category 1 fabric. There are no application charges for COM fabrics.

Payment for textiles purchased by Herman Miller through the Supplier Connection program is the responsibility of the customer or dealer. Herman Miller will invoice the order at the supplier's prices published at the time of the order.

Textile Approval

1. Refer to Omni to identify the approval status of the textile. If your textile is not listed, contact the COM Department to request testing for application to Herman Miller products.
2. Herman Miller will notify you of approval or disapproval in approximately 4 days from receipt of the test yardage. If the textile is approved, it will be assigned a COM identification number.

Ordering Products with Supplier Connection COM

1. Identify and include the following information on your purchase order:
   - Product number and option
   - Herman Miller's COM identification number
2. Enter your order on Order Manager in Omni.
3. Upon receipt of the purchase order, Herman Miller will process your order and send you a PO acknowledgment. Herman Miller will determine the yardage required to produce your product and will order and schedule for delivery the required textile. Standard lead times in effect at the time the textile is allocated at the supplier will apply to products ordered through this program.

Proprietary Textiles Application Chart — Workspaces

• *Available*

A *Assigned lead-time textile.*

See page 3 for exception notes.

	Action Office® Panels/Connectors	Action Office/Ethospace® B-Style Storage	Action Office B-Style Tackboards	Action Office/Ethospace E-Style Storage	Ethospace Tiles/Connectors	Ethospace Work Surface-Attached Screens	Ethospace/Canvas Office Landscape® Privacy Doors	Canvas Tiles/Extended Width Tiles	Canvas B-/E-Style Storage	Canvas Standing Screen and Team Wall Infill	Canvas Tackboards	Layout Studio® Framed Screen	Locale® Display Tackboard	Locale Freestanding Screen and Workbase Screen	Locale L-Desk/D-Desk Screens	Pari™ Screens/Flat Edge Screens	Prospect™ Exterior Acoustic Pad	Public Office Landscape® Screen/Desk Top Divider	Renew™ Link Screens	Resolve® Boundary Screens/Flags	Resolve Display Screens	Resolve Rolling Screens/Canopies	Exclave® Tackable Boards and Stowage Tackable Backdrop	Exclave Video-Friendly Tackable Boards and Stowage Tackable Backdrop	Intersect® Screens	Thrive® Personal Side Screen	Tu® Wood Storage Cubby Tackboard	5000 Series Storage and Tackboards	Seating
Price Category 1																													
COM Customer's Own Material A	1	1	1	1	1		1	1	1	1	•	1	1	1		1		1	1	1					1	1		3	1
8A_ _ Bubbletack™																					•								
2V_ _ Chain	•	•	•	•	•		•	22	•	•	•	•	•	•		•		•	•						•		•	3	
8T_ _ Crossing (85_ _)	2	2	2	•	•		•	•	2	•	•	•	•	•	•	•	•	•	•				•	8	•		•	3	18
3DE_ _ Dex	2	2	2	•	•		•	•	2	•	•	•	•	•	•	•		•	•				•		•	•	•		•
95_ _ Gem	2	2	2	•	•		•	•	2	•	•	•	•												•	•	•	3	•
2I_ _ Grasscloth	•	•	•	•	•		•	•	•	•	•		•	•	•	•	•	•	•						•	•	•	3	
1MN_ _ Monologue	2	2	2	•	•		•	•	2	•	•	•	•	•	•	•		•	•						•	•	•		•
8B_ _ Multiscrim™						•														•		•							
5T_ _ Resonance	•	•	•	•	•		•	•	•	•	•	•	•												•	•	•		
8C_ _ Scrim Trim																						•							
2M_ _ Silkworm	•	•	•	•	•		•	•	•	•	•	•	•												•	•	•	3	
22F_ _ Slant	6		•		•		•	•		•	•	•	•												•		•	3	
235_ _ Tailored A	•	•		•	•		•	8	•	•	•		•												•		•		•
1WS_ _ Whisper	2	2	2	•	•		•	•	2	•	•	•	•	•	•	•	•	•	•						•	•			•
Price Category 2																													
3AR_ _ Aristo	2	2	2	•	•		•	•	2	•	•	•	•	•	•	•		•	•				•		•	•	•		•
1CD_ _ Code	•	•	•	•	•		•	•	•	•	•	•	•										•		•				
3P_ _ ColorGuard		2		•																									•
51_ _ Cord	•	•	•	•	•		•	•	•	•	•	•	•												•		•	3	
92_ _ Crepe	2	•	•	•	•		•	•	•	•	•	•	•				•						•	8	•	•		3	•
3EP_ _ Epic	2	2	2	•	•		•	•	2	•	•	•	•	•	•	•		•	•				•		•	•	•		•
22Q_ _ Fish Net		2	2	•	•		•	•	2	•		•				•	•		•										•
57_ _ Frost	•	•	•	•	•		•	•	•	•	•	•	•	•		•		•	•						•	•	•	3	
84_ _ Grosgrain	4	•	•	•	•		•	8	•	•		•	19												•	19	•	3	
4N_ _ Horizon	2	2	2	•	•		•	•	•	•	•	•	•												•	•	•	3	
1LM_ _ Loom	2	2	2	•	•		•	•	•		•	•	•	•		•		•	•				•		•				•
1HA_ _ Medley	2	2	2	•	•		•	•	•	•	•	•	•	•	•	•	•	•	•				•	8	•	•			•
3A_ _ Moiré		2	2	•	•		•	22	2	•	•	•	•	•		•		•	•								•	3	•
1RV_ _ Rivet	2	2	2	•	•		•	•	2	•	•			•		•	•	•	•							•	•		•
8R_ _ Twist (5S_ _)	5	2	2	•	•		•	•	2	•	•	•	•	•	•	•	•	•	•						•	•	•	3	18
22T_ _ Well Suited		2		•	•			•	2	•																			•

continued on next page

Proprietary Textiles Application Chart — Workspaces

continued

	Action Office® Panels/Connectors	Action Office/Ethospace® B-Style Storage	Action Office B-Style Tackboards	Action Office/Ethospace E-Style Storage	Ethospace Tiles/Connectors	Ethospace Work Surface-Attached Screens	Ethospace/Canvas Office Landscape® Privacy Doors	Canvas Tiles/Extended Width Tiles	Canvas B-/E-Style Storage	Canvas Standing Screen and Team Wall Infill	Canvas Tackboards	Layout Studio® Framed Screen	Locale® Display Tackboard	Locale Freestanding Screen and Workbase Screen	Locale L-Desk/D-Desk Screens	Pari™ Screens/Flat Edge Screens	Prospect™ Exterior Acoustic Pad	Public Office Landscape® Screen/Desk Top Divider	Renew™ Link Screens	Resolve® Boundary Screens/Flags	Resolve Display Screens	Resolve Rolling Screens/Canopies	Exclave® Tackable Boards and Stowage Tackable Backdrop	Exclave Video-Friendly Tackable Boards and Stowage Tackable Backdrop	Intersect® Screens	Thrive® Personal Side Screen	Tu® Wood Storge Cubby Tackboard	5000 Series Storage and Tackboards	Seating
Price Category 3																													
70_ _ Bento	2	2	2	•				•	2	•	•		•	•		•		•	•						•		•	3	•
1FB _ Connection	•	•	•	•	•		•	•	•	•	•	•	•	•				•							•	•	•	3	
1FC _ Current	•	•	•	•	•		•	•	•	•	•	•	•	•				•							•	•	•	3	
8Z_ _ Glaze	•	•	•	•	•		•	•	•	•	•	•	•												•	•	•	3	
47_ _ Ground Cloth®	•	•	•	•	•		•	•	•	•	•	•	•	•		•		•	•	14			•	8	•	•	•	3	
5D_ _ Kira 2	2	2	2	•	•		•	•	2	•	•	•	•	•		•		•	•	14					•	•	•	3	
22R_ _ Pins and Needles	2	2		•	•		•	•	2	•	•	•	•												•				•
8L_ _ Savannah	•	20	•	•	•		•	•	•	•	•	•	•				•			14							•		
8U_ _ Stitches (5Z_ _)	2	2	2	•				•	2	•	•	•													•		•	3	18
8W_ _ Strands	•	•	•	•	•		•	•	•	•	•	•	•	•		•		•	•						•	•	•	3	
22V_ _ String Plaid	2	2	2	•	•		•	•	2	•	•	•	•	•		•		•	•						•				•
Price Category 4																													
2X_ _ Glisten	•	•	•	•	•		•	•	•	•	•	•	•						•						•		•	3	
22L_ _ Loft [A]		2	2	•	•		•	•	2	•	•	•	•	•	•	•	•	•	•				•	8	•	•	•	3	
6S_ _ Quilty	2	2	2	•	•		•	•	2			•	•												•	•		3	•
63_ _ Sironetta	•	•	•	•	•		•	•	•	•	•	•	•	•		•		•	•						•	•	•	3	
Price Category 5																													
14A_ _Hopsak	2	2	2	•	•			•	2	•	•	•	•										•		•		•		•
Price Category 6																													
No fabrics available at this time.																													

1 *Refer to price book appendices and Omni for COM information.*
2 *Available on all products except 54" and 60" wide.*
3 *Fabric is railroaded for all widths.*
4 *Not available on Action Office (AO®) acoustical panels.*
5 *(8R_ _), (8T_ _), (85_ _), and (5S_ _) not available on AO acoustical panels and not available on 54"- or 60"-wide products.*
6 *Not available on Action Office (AO®) connectors, cable management, and spacers.*
8 *Available in select colors. See the "Proprietary Textile Colors — Workspaces" appendix.*
14 *Not available on Resolve flags.*
18 *Available on seating products in select colors. See the "Proprietary Textile Colors — Seating" appendix.*
19 *Not available in Grosgrain (84_ _) fabric colors 8401, 8405, and 8413.*
20 *Available only on Ethospace B-Style.*
22 *Not available as railroaded application option for* Chain *(2V00) and* Moiré *(3A00) on Canvas Extended Width Tiles.*
24 *Not available on Ethospace cable access tile, cable channel tile, or beltline face tile.*

Application Note: Herman Miller cannot guarantee material/pattern alignment in adjacent products. For example, a fabric's pattern may not align from one screen to the next, or from one panel to the next.

Price Category 1

Customer's Own Material	
See Order Information in Appendices.	
Assigned lead-time textile. A	

Bubbletack™	
100% polyester	
8A01	Seashell White
8A02	Pearl Grey
8A05	Dune Beige
8A07	Pebble Beige
8A09	Olive Green
8A13	Slate Purple
8A19	Spa Blue
8A24	Sable Grey
8A27	Summer White
8A28	Moth Grey
8A29	Tea Leaf Grey
8A30	Blue Grey
8A31	Dusty Bronze
8A32	Slate Blue
8A33	Caramel Beige
8A34	Kiwi Green
8A35	Studio White
8A36	Blush Grey
8A37	Shale
8A38	Slate
8A39	Eggnog
8A40	Persimmon
8A41	Bud

Chain	
66” wide	
100% recycled polyester	
2V01	Pearl
2V02	Oyster
2V03	Wheat
2V04	Linen
2V05	Wicker
2V06	Bamboo
2V07	Sage
2V08	Spring Wood
2V09	Iceberg

Crossing	
54” wide	
86% antimony-free polyester	
14% polyester	
8T03	Wicker *
8T04	Porcelain *
8T05	Warm Grey *
8T06	Sepia
8T07	Pumpkin
8T08	Copper
8T09	Cranberry
8T10	Tomato
8T11	Mulberry
8T12	Plum
8T13	Green Apple
8T14	Loden
8T15	Spruce
8T16	Periwinkle
8T17	Cerulean
8T18	Indigo
8T19	Shale *
8T20	Brownstone
8T21	Bark
8T22	Tin *
8T23	Graphite
8T24	Black

Crossing	
For workspaces products only.	
54” wide	
86% antimony-free polyester	
14% polyester	
8501	Ivory *
8502	Oyster *

* Colors available on Exclave® Video-friendly Tackable Boards and Stowage Tackable Backdrop

Dex	
54” wide	
50% recycled polyester	
50% polyester	
3DE01	Frost
3DE02	Silver Pine
3DE03	Stone
3DE04	Shale
3DE05	Charcoal

Gem	
54” wide	
100% antimony-free polyester	
9501	Sesame
9502	Tangerine
9503	Red
9504	Red Violet
9505	Mulberry
9506	Java
9507	Twilight
9508	Bayou
9509	Iris
9510	Berry Blue
9511	Aqua Green
9512	Green Apple
9513	Spruce
9514	Black
9515	Slate Grey
9516	Fog

Grasscloth	
66” wide	
100% recycled polyester	
2I01	Silver Birch
2I02	Pampas
2I03	Sedge
2I07	Lea
2I08	Taro
2I09	Steam Grey
2I10	Cayenne
2I11	Bottle Green
2I12	Surf
2I13	Gravel

Monologue	
54” wide	
56% recycled polyester	
44% polyester	
1MN01	Linen
1MN02	Alabaster
1MN03	Truffle
1MN04	Folkstone
1MN05	Silver Pine
1MN06	Slate
1MN07	Seed
1MN08	Yellow Oxide
1MN09	Persimmon
1MN10	Tundra
1MN11	Meadow
1MN12	Blue Sky
1MN13	Blue Spruce
1MN14	Deep Sea

Multiscrim™	
60” wide	
100% polyester	
8B01	Seashell White
8B02	Pearl Grey
8B05	Dune Beige
8B07	Pebble Beige
8B09	Olive Green
8B15	Slate Purple
8B19	Spa Blue
8B24	Sable Grey
8B27	Summer White
8B28	Moth Grey
8B29	Tea Leaf Grey
8B30	Blue Grey
8B31	Dusty Bronze
8B32	Slate Blue
8B33	Caramel Beige
8B34	Kiwi Green
8B35	Studio White
8B36	Blush Grey
8B37	Shale
8B38	Slate
8B39	Eggnog
8B40	Persimmon
8B41	Bud

Price category 1 continued on next page

Price Category 1
continued

Price Category 2

Resonance	
66” wide	
100% polyester	
5T04	Greige
5T05	Porcelain
5T06	Alabaster
5T15	Iris
5T28	Sugar
5T47	Tobacco
5T54	Saltbush
5T57	Seed
5T58	Sepia
5T59	Tundra
5T60	Iceberg
5T61	Black
5T62	Chamois
5T63	Citrus
5T64	Tangerine
5T65	Red
5T66	Wild Berry
5T67	Boysenberry
5T68	Pistachio
5T69	Green Apple
5T70	Forest
5T71	Jade
5T72	Blue Green
5T73	Bright Turquoise
5T74	Twilight

Scrim Trim	
61” wide	
82% polyester	
18% spandex	
8C01	Seashell White
8C02	earl Grey
8C22	Winter Grey
8C24	Sable Grey

Silkworm	
66” wide	
58% recycled polyester	
42% polyester	
2M01	Cocoon
2M02	Pongee
2M03	Saffron
2M04	Tussah
2M05	Ceylon
2M06	Jasmine
2M07	Shale
2M08	Monsoon

Slant	
66” wide	
51% polyester	
49% recycled polyester	
22F01	Beech Nut
22F02	Chamois
22F03	Chartreuse
22F04	Pesto
22F05	Peacock
22F06	Neptune
22F07	Blueberry
22F08	Boysenberry
22F09	Magenta
22F10	Pumpkin
22F11	Cranberry
22F12	Silver Birch
22F13	Bluestone
22F14	Truffle
22F15	Shale

Tailored	
Assigned lead-time textile. A	
54” wide	
56% polyester	
44% recycled polyester	
23501	Studio White *
23502	Sugar
23503	Tomato
23504	Orchid
23505	Boysenberry
23506	Chive
23507	Bluegrass
23508	Cobalt
23509	Cadet
23510	Fog
23511	Graphite
23512	Black
23513	Coffee

* Color not available on Canvas Tiles.

Whisper	
54” wide	
73% recycled polyester	
27% polyester	
1WS01	Sand Dollar
1WS02	Pebble
1WS03	Silver Birch
1WS04	Iceberg
1WS05	Silver Pine
1WS06	Carbon
1WS07	Cumin
1WS08	Adobe
1WS09	Strawberry
1WS10	Blush
1WS11	Eggplant
1WS12	Willow
1WS13	Sea Grass
1WS14	Pool
1WS15	Blueberry

Aristo	
54” wide	
88% recycled polyester	
12% polyester	
Acrylic backing	
3AR01	Forest Moss
3AR02	Light Brindle
3AR03	Mink
3AR04	Copper
3AR05	Adobe
3AR06	Cherry
3AR07	Lilac
3AR08	Green Apple
3AR09	Surf
3AR10	Waterfall
3AR11	Cadet
3AR12	Tin
3AR13	Pewter
3AR14	Grey Brindle
3AR15	Grey Black

Code	
66” wide	
100% Repreve recycled polyester	
1CD01	Linen
1CD02	Khaki
1CD03	Iceberg
1CD04	Zinc
1CD05	Blue Black

Price category 2 continued on next page

Price Category 2
continued

ColorGuard		
54” wide		
100% vinyl		
3P01	Grey	
3P02	Navy	
3P03	Spruce	A
3P08	Blueberry	A
3P12	Black Plum	A
3P14	Black	
3P19	Slate	
3P31	Horizon Blue	A
3P33	Pumice	
3P54	Candy Apple	A
3P72	Allspice	A
3P96	Manzanita	A
3P97	Fudge	A
3PB2	Sea Grass	A
3PB5	Vizcaya Palm	A
3PB9	Neptune	A
3PC7	Bucksuede	A
3PD4	Otter	A

A Assigned lead-time color.

Cord	
66” wide	
51% antimony-free polyester	
49% polyester	
5101	Ivory
5102	White Ash
5103	Linen
5104	Bamboo
5105	Sepia
5106	Wicker
5107	Sesame
5108	Kiwi Green
5109	Bayou
5110	Shade
5111	Spring Wood
5112	Summer White

Crepe	
54” wide	
100% recycled polyester	
9201	Licorice
9203	Smoke
9207	Cherry
9209	Claret
9212	Raisin
9218	Aquamarine
9223	Cadet
9241	Beachglass
9243	Midnight
9244	Artichoke
9248	Warm White *
9249	Stone *
9250	Earth
9251	Fog *
9252	Slate Grey
9253	Yellow Dark
9254	Coral
9255	Blush Grey *
9256	Wild Berry
9257	Clover
9258	Caribbean
9259	Cerulean
9260	Brownstone
9261	Shale
9262	Graphite
9263	Tomato
9264	Green Apple

* Colors available on Exclave® Video-friendly Tackable Boards and Stowage Tackable Backdrop.

Epic	
54” wide	
56% recycled polyester	
44% polyester	
Acrylic backing	
3EP01	Alabaster
3EP02	Smoke
3EP03	Falcon
3EP04	Citrus Spring
3EP05	Copper
3EP06	Urban Orange
3EP07	Poppy
3EP08	Wild Plum
3EP09	Sugar Plum
3EP10	Clover
3EP11	Loden
3EP12	Everglade
3EP13	Mist
3EP14	Peacock
3EP15	Cadet
3EP16	Indigo
3EP17	Spring Wood
3EP18	Grey Brindle
3EP19	Seed
3EP20	Carbon Dark

Fish Net	
55” wide	
100% recycled polyester	
22Q01	Oyster
22Q02	Stone
22Q03	Citrus
22Q04	Curry
22Q05	Chipotle
22Q06	Cherry
22Q07	Fuschia
22Q08	Claret
22Q09	Purple
22Q10	Clover
22Q11	Pesto
22Q12	Peacock
22Q13	Lagoon
22Q14	Twilight
22Q15	Bluestone
22Q16	Storm
22Q17	Black
22Q18	Cocoa

Frost	
66” wide	
100% recycled polyester	
5701	Bisque
5702	Abalone
5703	Porcelain
5704	Honey
5705	Iceberg
5706	Sage
5707	Reed
5708	Steam Grey
5709	Gunmetal
5710	Sable Grey

Grosgrain	
66” wide	
100% recycled polyester	
8401	Pearl * **
8402	White Ash
8403	Warm Grey
8404	Khaki
8405	Oyster *
8406	Celadon
8408	Spa Blue
8409	Bud
8410	Kiwi Green
8411	Bayou
8412	Tin
8413	Iceberg *

* Colors not available on Canvas Dock Mounted Screens, Locale® Workbase Screen, Public Office Landscape® Screen/Desk Top Divider, and Thrive® Personal Side Screen.
** Color not available on Canvas Tiles.

Price category 2 continued on next page

Price Category 2
continued

Horizon
54” wide
65% antimony-free polyester
35% polyester

4N01	Rye Grass
4N02	Sugar Pine
4N03	Silver Pine
4N04	White Ash
4N05	Spring Wood
4N06	Tamarack
4N07	Mushroom
4N08	Haystack
4N09	Oat Grass
4N10	Forest Moss
4N11	Hickory
4N12	Beech Nut
4N13	Pine Cone
4N14	Poplar
4N15	Elderberry

Loom
54” wide
100% polyester

1LM01	Linen
1LM02	Brown Sugar and Spice
1LM03	Brick and Mortar
1LM04	Salt and Pepper
1LM05	Black
1LM06	Lemongrass
1LM07	Poppy
1LM08	Wild Berry
1LM09	Loden
1LM10	Jade
1LM11	Deep Sea

Medley
54” wide
100% polyester

1HA01	Stone *
1HA02	Trail
1HA03	Charcoal
1HA04	Cinder
1HA05	Citrus
1HA06	Papaya
1HA07	Chutney
1HA08	Tundra
1HA09	Feather Grey *
1HA10	Chartreuse
1HA11	Loden
1HA12	Peacock
1HA13	Bayou *
1HA14	Blue Grotto
1HA15	Blueberry
1HA22	Khaki
1HA23	Pewter
1HA24	Yellow Oxide
1HA25	Vintage Rose
1HA26	Raspberry
1HA27	Acai Berry

* Colors available on Exclave®
Video-friendly Tackable
Boards and Stowage Tackable
Backdrop

Moiré
54” wide
100% recycled polyester

3A01	Concrete
3A02	Biscotti
3A03	Rattan
3A04	Chambray
3A05	Fern
3A08	Violet
3A09	Zin
3A10	Curry
3A11	Spice
3A12	Cork

Rivet
54” wide
100% recycled polyester

1RV01	Twig
1RV02	Deep Clay
1RV03	Woodrose
1RV04	Otter
1RV05	Hemlock
1RV06	Olive
1RV07	Lagoon
1RV08	Deep Sea
1RV09	Charcoal
1RV10	Grey Brindle

Twist
54” wide
80% antimony-free polyester
13% recycled polyester
7% polyester

8R05	Wicker
8R10	Poppy
8R14	Tin
8R15	Shale
8R16	Graphite
8R17	Birch
8R18	Sepia
8R22	Blueberry
8R23	Green Apple
8R26	Gunmetal
8R27	Cinder
8R28	Citrus
8R29	Pekoe
8R30	Tangerine
8R31	Red Plum
8R32	Wisteria
8R33	Forest
8R34	Jade Dark
8R35	Waterfall
8R36	Midnight Blue
8R37	arbon Dark

Twist
For workspaces products only.
54” wide
80% antimony-free polyester
13% recycled polyester
7% polyester

5S01	Pearl
5S02	Ivory
5S03	Oyster

Price category 2 continued on next page

Price Category 2
continued

Price Category 3

Well Suited	
55” wide	
79% polyester	
21% recycled polyester	
22T01	Oyster
22T02	Raffia
22T03	Peppermint
22T04	Wild Berry
22T05	Spring Green
22T06	Mint
22T07	Periwinkle
22T08	Cool Grey
22T09	Citrus
22T10	Pumpkin
22T11	Red
22T12	Fuschia
22T13	Orchid
22T14	Chartreuse
22T15	Green Apple
22T16	Jade
22T17	Peacock
22T18	Blueberry
22T19	Bluestone
22T20	Mink

Bento	
54” wide	
100% antimony-free polyester	
7001	Frost
7002	Linen
7003	Khaki
7004	Truffle
7005	Grey Black
7006	Pumpkin
7007	Cranberry
7008	Everglade
7009	Cobalt

Connection	
66” wide	
100% antimony-free polyester	
1FB1	Oyster
1FB2	Linen
1FB3	Iceberg
1FB4	Silver Pine
1FB5	Apricot
1FB6	Cumin
1FB7	Green Apple
1FB8	Slate Blue
1FB9	Metal

Current	
66” wide	
100% antimony-free polyester	
1FC1	Oyster
1FC2	Linen
1FC3	Iceberg
1FC4	Silver Pine
1FC5	Apricot
1FC6	Cumin
1FC7	Green Apple
1FC8	Slate Blue
1FC9	Metal

Glaze	
66” wide	
100% recycled polyester	
8Z01	Wicker
8Z02	Honey
8Z03	Porcelain
8Z04	Celadon
8Z06	Rye
8Z07	Frost
8Z08	Silver Birch

Ground Cloth®	
66” wide	
100% polyester	
4701	Vapor Grey
4721	Warm White *
4722	Fog *
4723	Straw *
4724	Red Orange *
4725	Wild Berry *
4726	Green Apple *
4727	Caribbean *
4728	Midnight *
4729	Cappuccino *

* Colors available on Exclave® Video-friendly Tackable Boards and Stowage Tackable Backdrop

Kira 2	
54” wide	
100% recycled polyester	
5D11	Flaxen
5D12	Papyrus
5D13	Oasis
5D14	Incense
5D15	Ash
5D16	Falcon

Pins and Needles	
58” wide	
76% recycled polyester	
24% polyester	
22R01	Day and Night
22R02	Night and Day

Savannah	
66” wide	
76% recycled polyester	
24% polypropylene	
8L01	Pearl
8L02	Oyster
8L03	Wheat
8L04	Jute
8L05	Bamboo
8L06	Metal
8L07	Linen
8L08	Celadon
8L09	Moss
8L10	Frost
8L11	Shale
8L12	Pewter

Stitches	
54” wide	
54% polyester	
46% recycled polyester	
8U02	Rye
8U03	Khaki
8U04	Honey
8U05	Cattail
8U08	Cool Grey
8U09	Slate Blue
8U11	Evening Blue
8U12	Charcoal
8U13	Kiwi Green
8U16	Cocoa
8U17	Seed

Stitches	
For workspaces products only.	
54” wide	
54% polyester	
46% recycled polyester	
5Z01	White Ash

Price category 3 continued on next page

Price Category 3
continued

Strands
66” wide
100% recycled polyester

8W01	Pebble
8W02	Porcelain
8W03	Taupe
8W04	Honey
8W05	Khaki
8W06	Rye
8W07	Wicker
8W08	Tin
8W09	Cool Grey

String Plaid
54” wide
100% recycled polyester

22V01	Warm White on Khaki
22V02	Mint on Yellow Green
22V03	Mist on Blue Grey
22V04	Sky Blue on Red
22V05	Lime on Magenta
22V06	Bright Green on Green
22V07	Aqua Blue on Cerulean
22V08	Ivory on Black

Price Category 4

Glisten
66” wide
84% polyester
16% recycled polyester

2X02	Rye
2X05	Iceberg
2X09	Pewter
2X10	Ash

Loft
Assigned lead-time textile. A
54” wide
100% wool

22L01	Heathered Light Green
22L02	Heathered Dark Green
22L03	Heathered Turquoise
22L04	Heathered Navy
22L05	Heathered Orange
22L06	Heathered Red
22L07	Heathered Tan *
22L08	Heathered Grey *
22L09	Heathered Blue *
22L10	Heathered Brown
22L11	Heathered Dark Grey
22L12	Heathered Denim

* Colors available on Exclave®
Video-friendly Tackable
Boards and Stowage Tackable
Backdrop

Quilty
56” wide
100% antimony-free polyester
GreenShield

6S03	Khaki
6S04	Straw
6S07	Brick
6S10	Mink
6S11	Green Apple
6S13	Indigo
6S14	Zinc
6S15	Slate
6S16	Beachwood
6S17	Paprika
6S18	Plum
6S19	Juniper
6S20	Grey Black

Sironetta
66” wide
100% recycled polyester

6301	Acapella
6302	Sonata
6303	Interlude
6304	Legato
6308	Harmony
6309	Ensemble

Price Category 5

Hopsak
56” wide
100% recycled polyester

14A20	Black
14A22	Raw Umber Dark
14A26	Grey Blue Dark
14A30	Sepia Dark
14A38	Emerald Dark
14A39	Yellow Dark
14A40	Orange
14A41	Sienna
14A42	Olive Green Dark
14A43	Crimson
14A44	Crimson Dark Dark
14A45	Violet Dark
14A46	Pink Dark Dark
14A47	Ultramarine Dark
14A48	Cobalt Blue
14A49	Terra Cotta
14A50	Ochre Dark

For more information about our products and services or to see a list of dealers, please visit us at HermanMiller.com or call (800) 851 1196.

© 2018 Herman Miller, Inc., Zeeland, Michigan

® **HermanMiller**, ☻, 3D Intelligent, AO, Action Office, Aeron, ArcSpan, Aside, Avall, Avive, Bubble Lamps, Canvas Office Landscape, Caper, Celle, Co/Struc, Daisyone, Distil, Eames, Eco-Dematerialized, Embody, Envelop, Equa 2, Ergon 3, Ethospace, Exclave, Fine-Tune, FlexFront, Flo, Formcoat, Formwork, Ground Cloth, Herman Miller for the Home, Herman Miller for Healthcare, Intersect, Kinemat, Lapjack, Layout Studio, Lifework, Limerick, Live Unframed, Living Office, Locale, Maharam, Meridian, Mirra, Passage, Pellicle, Perspectives, PostureFit, Public Office Landscape, Resolve, Rodney, Sayl, Setu, Thrive, Tu, Wishbone, and Y-Tower are among the registered trademarks of Herman Miller, Inc., and its owned subsidiaries.

™ 8Z Pellicle, About Face, AireWeave, Albert, Backfit, Bubbletack, Burdick Group, Butterfly Back, Celeste, Cellular Suspension, Clam, Compass, Connect, Cosm, Cubert, DOT, Duracare, Durawrap, Eames Soft Pad, EnhancedAccess, Everywhere, Flex-Edge, Flute, Harmonic, Herman Miller Select, Hopsak 2, Intent, Iota, Jaw, Keyless Entry, Keyn Chair Group by Herman Miller, Latitude, Lino, Locale, Logic Mini, Logic Power Access Solutions, Live OS, Loop, Lyris, Lyris 2, Made-to-Measure Storage, Metaform Portfolio, Mora, Motia, Multiscrim, Nelson, Pari, Pixelated Support, Plex, PostureFit SL, Prospect, Q, Renew, Sense, Soft Pad, Stackable, Stackable Storage, Striad, Swoop, Tone, TriFlex, Twist, Ubi, Verus and Wireframe are among the trademarks of Herman Miller, Inc., and its owned subsidiaries.

SM Herman Miller Options is among the service marks of Herman Miller, Inc.

Alexander Girard® is a registered trademark of The Alexander Girard Estate.

Chemsurf® is a registered trademark of Wilsonart International.

Corian® is a registered trademark of E. I. du Pont de Nemours and Company Corporation.

Crypton® is a registered trademark of Crypton, Inc.

DACRON® is a registered trademark of INVISTA S.a r.l.

Edelman® Leather is a registered trademark of Edelman Leather, Inc.

FENIX NTM® is a registered trademark of Arpa Industriale S.p.A.

FLEXNET™ is a trademark of Milliken & Company.

Floor Saver Glide® is a registered trademark of Carpin Manufacturing, Inc.

Geiger® is a registered trademark, and Bumper™, Saiba™, and Ward Bennett™ are trademarks, of Geiger International.

Goetz™ is a trademark of Mark W. Goetz.

Hang-It-All® is a registered trademark of Lucia Eames Demetrios, d.b.a. Eames Office.

Holophane® is a registered trademark of Holophane.

Ingeo™ is a trademark of Cargill Dow LLC.

iPad® is a registered trademark of Apple, Inc.

LifeSize® is a registered trademark of LifeSize Communications, Inc.

Magis®, Bombo®, and Me Too® are registered trademarks of Magis S.p.A.

Microsoft® and Natural® Keyboard are registered trademarks of Microsoft Corporation.

Noguchi® and the Noguchi table configuration (trade dress) are registered trademarks, and Rudder Table™ is a trademark, of The Isamu Noguchi Foundation and Garden Museum.

Place Textiles® is a registered trademark of Place Textiles.

SuperSeat™ is a trademark of Dahti Seating, a division of ITW.