SMTF251710TSD CONTROLLER CABINET UNWIRED TYPE I

Cabinet Dimensions: 24.50”H x 17.00”W x 10.125”D

Overview:

The Temple SMTF251710TSD Controller Cabinet Unwired Type I is designed to house a Solar Powered Wired Type I Cabinet Assembly that can be used for Flasher Deployment (Advanced Warning, School Zone) among other applications that require the use of a small cabinet shell. The SMTF251710TSD Controller Cabinet Unwired Type I is designed according to the Florida Department of Transportation Section 676 Standard Specifications for Road and Bridge Construction.

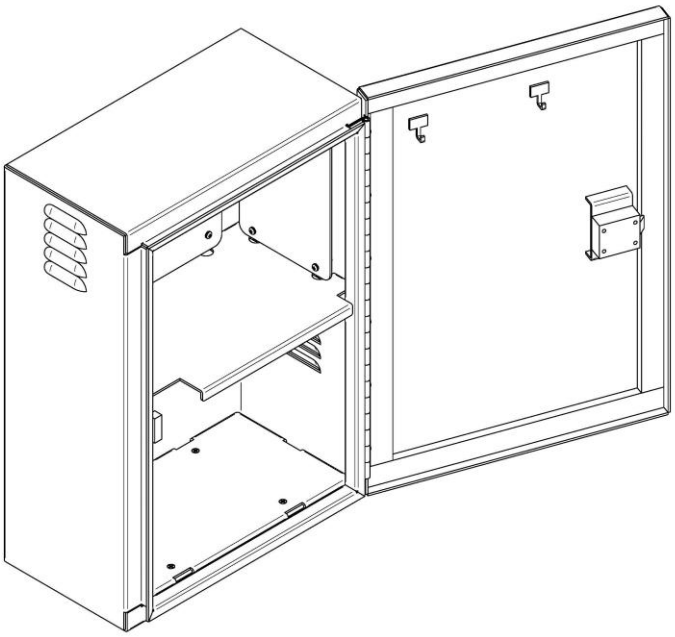

Features:

- NEMA 3R Cabinet Enclosure
- 0.125” thick 5052-H32 Aluminum Alloy
- Double Flanged Door Opening
- 14 AWG Stainless Steel Hinge
- Closed-Cell Neoprene Gasket
- Corbin #2 Slam Lock
- Louvered Vents
- Back and Side Panel Mounting
- Removable Shelf
- Battery Tray
- Flat and Round Surface Mounting
- Re-Sealable Print Pouch

PELCO PRODUCTS, INC.
www.pelcoinc.com
320 W. 18TH ST, EDMOND OK 73013
PH: 405-340-3434 FAX: 405-340-3435

This drawing is for reference only. It is the property of Pelco and is not to be used in whole or in part without Pelco's permission.

ASSEMBLY SHEET

REF:

TITLE: Cabinet Lock, Type II, Tapered Tumbler Type, Brass

PELCO NO.: SM-1023

PART NO
SM-1023-BRS
SM-1023-2K-BRS

Key
Brass

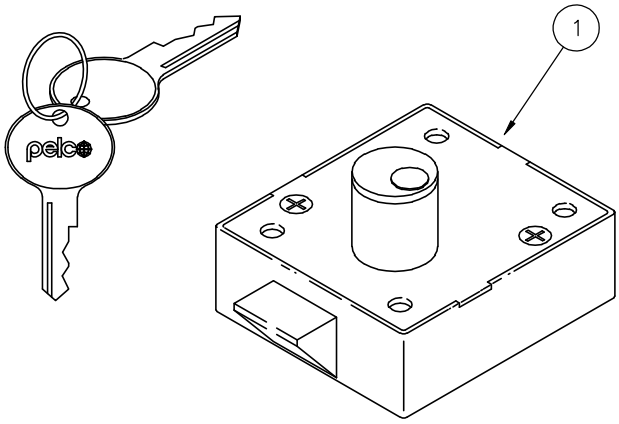

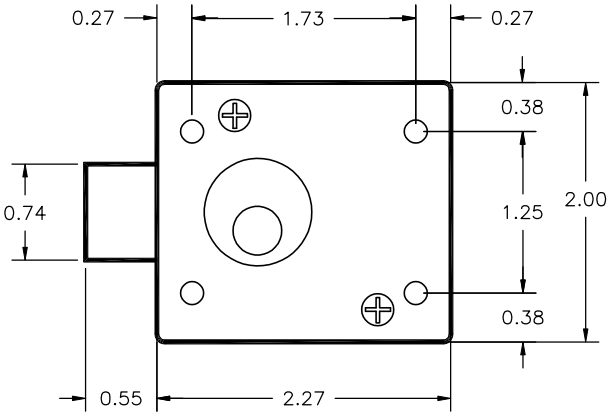

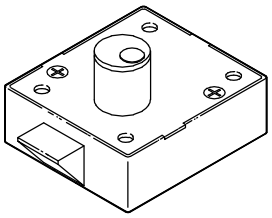

Optional Machined
SM-1026-M1

Key
SM-0198-2

Blank Key
SM-0198-B

OPTIONS
0K=Lock Only
1K=Lock w/ 1 Key
2K=Lock w/ 2 Keys

ITEM	PART NO.	DESCRIPTION	QTY
1	SM-1023-BRS	Lock, Type II, Tapered Latch, Brass Finish	1

DRAWN: C MADDEN DATE: 08/31/09 | CHK'D: KBM DATE: 09/01/09 | REV. A-04/12/10 CM | REV CHK'D: KBM-04/16/10 | SHT. 1 OF 1

C:\Vault-Local\CAD\Pelco Dwgs\sm\SM-1023.dwg, 4/16/2010 1:41:23 PM, Controlled Document Valid for 72 Hours

Mounting Assemblies

Aluminum Flasher Cabinets are weather resistant and are available for rear, top and bottom mounting. Various brackets are available for mounting to wood or metal poles. A complete line of Type II or Police Type cabinets are available.

Mounting Kit, 4" (4-1/2" OD) Post

SE-1100 - [ ] Coating

PNC=Process No Color
P_ _=Paint

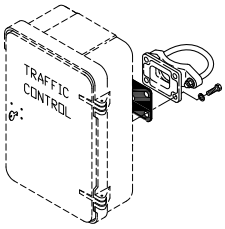

Mounting Kit, 3" (3-1/2" OD) Post

SE-1101 - [ ] Coating

PNC=Process No Color
P_ _=Paint

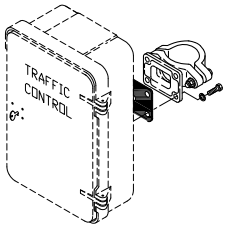

Mounting Kit, Wood Pole w/ 1-1/2" Single Hub & Closure Plate

SE-1103 - [ ] Coating

PNC=Process No Color
P_ _=Paint

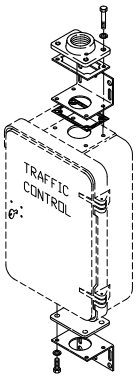

Mounting Kit, Sweep Elbows

SE-1104 - [ ] Coating

PNC=Process No Color
P_ _=Paint

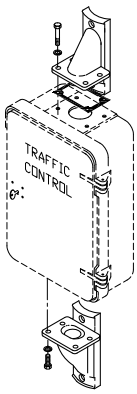

Note: 1. All assemblies are supplied standard with stainless steel fasteners.
2. See Reference Section for available paint colors.

applied INFORMATION

Turning data into information...

www.appinfoinc.com

AI-900-010 DC Flasher Unit

Overview

The AI DC Flasher Unit is designed for solar powered flashing beacons. It is designed for extreme temperature applications and has low power requirements, making it suitable for solar powered applications. The unit will operate from 11V - 25V DC to flash LED solar powered beacons on and off.

Features

- Compatible with AI-500-070 Timer Switch
- Small form factor
- Low power consumption
- Supports 11.2-25v DC input
- Designed for LED and Halogen Lamps
- 10Amps maximum load
- Special Flash rates available on custom orders

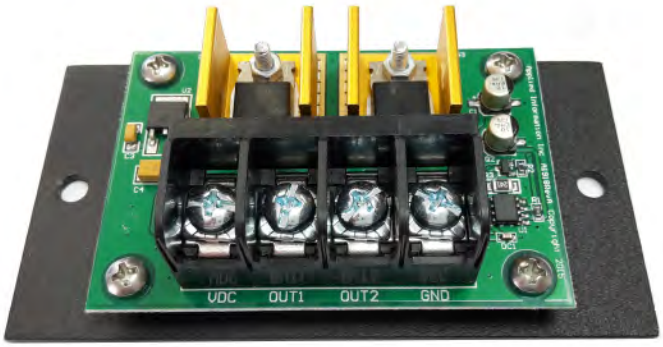

	AI-DC Flasher
Technical Details	
Operating Temperature	-37°C to 74°C
Humidity	5-95% non-condensing
Dimensions	4.2” (L) x 2.2“ (W) x 1.3” (H)
Input Voltage	11-25v DC
Maximum Load Voltage	55 VDC
Maximum Load Current	7 Amps
Flash Rate	1/2 sec on;1/2 sec off
Flash Circuits	1 or 2 circuits
Lamp Type	LED or Halogen

Call us today to get started at **678.830.2170** or email us at **sales@appinfoinc.com!**

4411 Suwanee Dam Road, Suite 510, Suwanee, GA 30024 • 678.830.2170
appinfoinc.com • sales@appinfoinc.om

MORNINGSTAR® corporation

SUNSAVER™

SOLAR CONTROLLER

Morningstar is pleased to introduce our third generation ***SunSaver***. Since its first market introduction in 1996, over 1 million SunSaver controllers have been installed in over 73 countries for numerous solar power systems including oil/gas, telecom and instrumentation, marine and boating, and remote homes. We have retained much of our legacy design including the same ratings, footprint and simple user interface, and have added several new and advanced high value features:

- Full electronic protections
- 4 stage battery charging
- Self-diagnostics to detect critical faults
- Multi-color status LED
- 3 LED's for battery state of charge
- Dead battery recovery
- Telecom mode for sensitive loads
- Maximum charge limiting for sensitive loads
- Cover to protect wire terminals
- Additional certifications

Key Features and Benefits

Extremely High Reliability

- Failure rate of less than 1 per 1,000 shipped (<0.1%)
- 100% solid state. Power MOSFET design
- Manufactured in an ISO 9000 factory
- 100% pre-shipment functional testing

Longer Battery Life

- Advanced PWM charging
- Series design (not shunt) for cool operation
- 4-stage charging: bulk, absorption, float, equalize
- Optimized sealed or flooded battery set points
- Temperature compensated charging
- Low voltage load disconnect on several versions

Designed for Harsh Environments

- Temperature rating of –40°C to +60°C
- Epoxy encapsulation for protection against humidity and dust ingress
- Corrosion protection: marine rated terminals and anodized aluminum case
- Certified for use in hazardous locations

Easy to Install and Use

- Factory pre-sets result in no required install settings
- Electronic protections prevent damage from wiring mistakes
- Fully automatic operation and fault recovery
- LED's display extensive information about status, faults and battery condition

SUNSAVER™ SOLAR CONTROLLER

SunSaver Versions

	Solar Current	Load Current	System Voltage	LVD
• SS-6-12V	6A	6A	12V	No
• SS-6L-12V	6A	6A	12V	Yes
• SS-10-12V	10A	10A	12V	No
• SS-10L-12V	10A	10A	12V	Yes
• SS-10L-24V	10A	10A	24V	Yes
• SS-20L-12V	20A	20A	12V	Yes
• SS-20L-24V	20A	20A	24V	Yes

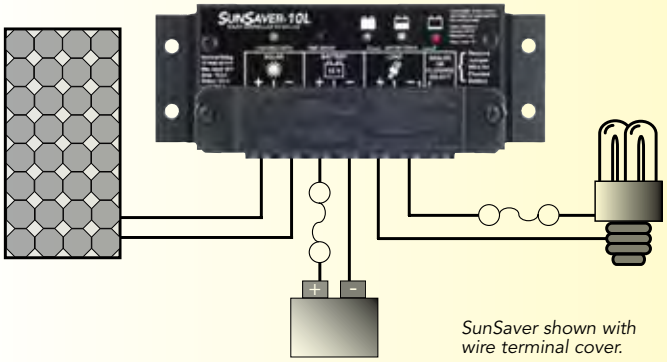

SunSaver shown with wire terminal cover.

TECHNICAL SPECIFICATIONS

Electrical

- **Max. PV and load ratings** — Per above
- **System voltage** — 12 or 24 volts
- **Min. battery voltage** — 1 volt
- **Regulation voltage**

	12 volt	24 volt
Sealed battery	14.1 V	28.2 V
Flooded battery	14.4 V	28.8 V

- **Load disconnect** — 11.5 V / 23.0 V
- **LVD reconnect** — 12.6 V / 25.2 V
- **Max. solar voltage**
  - 12V battery — 30 volts
  - 24V battery — 60 volts
- **Load in-rush capability**
  - SunSaver-6 — 45 amps
  - SunSaver-10 — 65 amps
  - SunSaver-20 — 140 amps
- **Self-consumption** — < 8 mA
- **Voltage accuracy** — 12V: +/– 25 mV (typical)
24V: +/– 48 mV (typical)
- **Transient surge protection** — 1500W per connection

Mechanical

- **Wire size** — 5 mm² / #10 AWG
- **Weight (unpacked)** — 0.23kg / 8 oz.
- **Dimensions** — 15.2 x 5.5 x 3.4 cm
6.0 x 2.2 x 1.3 inch

Environmental

- **Ambient temperature** — –40°C to +60°C
- **Storage temperature** — –55°C to +80°C
- **Humidity** — 100% non-condensing
- **Tropicalization** — Epoxy encapsulation
Marine rated terminals
Anodized aluminum case

Electronic Protections

- **Solar:** Overload, short-circuit, high voltage
- **Load:** Overload, short-circuit, high voltage
- **Battery:** High voltage
- **All:** Reverse polarity, high temperature, lightning and transient surges
- **Reverse current at night**

Battery Charging

- **Charging method** — 4 stage series PWM
- **Charging stages** — Bulk, absorption, float, equalize
- **Temperature compensation**
  - Coefficient — 12V: –30mV/°C
24V: –60mV/°C
  - Range — –30°C to +60°C
  - Set points — Absorption, float, equalize

LED Indications

- **Status LED (1)** — Charging or not charging
Solar error conditions
- **Battery LED's (3)** — Battery level
Charging stage

Certifications

- **ETL Listed to UL 1741 and CSA C22.2 No. 107.1-01**
- **Hazardous Locations** — Class 1, Division 2, Groups A,B,C,D
CSA C22.2#213
- **EMC Directives** — Immunity, emissions, safety
- **FCC** — Class B Part 15
- **CE**
- **RoHS**
- **ISO 9000**

WARRANTY: ***Five year warranty period. Contact Morningstar or your authorized distributor for complete terms.***

AUTHORIZED MORNINGSTAR DISTRIBUTOR:

MORNINGSTAR® corporation

8 Pheasant Run
Newtown, PA 18940 USA
Tel: +1 215-321-4457 Fax: +1 215-321-4458
E-mail: info@morningstarcorp.com
Website: www.morningstarcorp.com

© 2009-2012 MORNINGSTAR CORPORATION *PRINTED IN USA 204E-R3-5/12*

SLP045-12U

High Efficiency Multicrystalline PV Module

Electrical Characteristics	SLP045-12U
Product code	045011203A
Maximum power (Pmax)	45W
Voltage at Pmax (Vmp)	17.2V
Current at Pmax (Imp)	2.62A
Open-circuit voltage (Voc)	21.6V
Short-circuit current (Isc)	2.92A
Temperature coefficient of Voc	-(80±10)mV/°C
Temperature coefficient of Isc	(0.065±0.015)%/ °C
Temperature coefficient of power	-(0.5±0.05)%/ °C
NOCT (Air 20°C; Sun 0.8kW/m² wind 1m/s)	47±2°C
Operating temperature	-40°C to 85°C
Maximum system voltage	1000V DC
Power tolerance	± 5%

*STC: Irradiance 1000W/m², AM1.5 spectrum, module temperature 25°C
*NOCT:Nominal operating cell temperature (the data is only for reference)

Module Diagram

Dimensions in brackets are in inches.
Un-bracketed dimensions are in millimeters.
Unit: mm[in.]

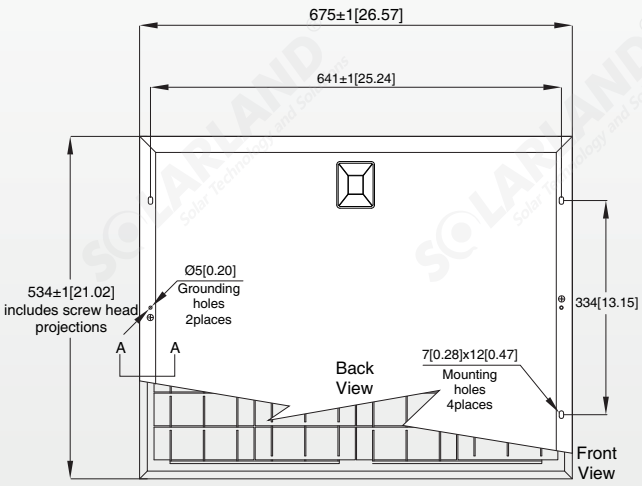

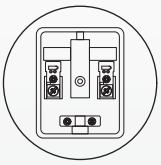

Junction Box
Top View(Lid Open)

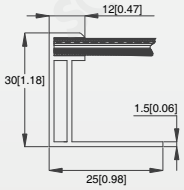

Section A-A

Features

- Nominal 12V DC for standard output.
- Outstanding low-light performance.
- Heavy-duty anodized frames.
- High transparent low-iron,tempered glass.
- Rugged design to withstand high wind pressure, hail and snow load.
- Aesthetic appearance.

Characteristics

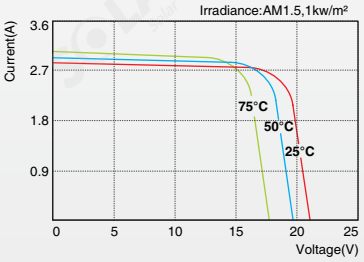

SLP045-12U I-V Curves

Specifications	SLP045-12U
Cells	Polycrystalline silicon solar cell
No. of cells and connections	36(4X9)
Module dimension	534mm[21.02in.]x675mm[26.57in.]x30mm[1.18in.]
Weight	4.65kg[10.25lbs]
Packing information(Carton)	690mm[27.17in.]x180mm[7.09in.]x555mm[21.85in.]/(5pcs/ctn)

*Limited warranty: 5-year limited warranty of materials and workmanship; 10-year limited warranty of 90% power output; 25-year limited warranty of 80% power output. For detail, please contact us.
*Specifications are subject to change without notice at any time.

PELCO PRODUCTS, INC.
PH: 405-340-3434
FAX: 405-340-3435
Edmond, OK 73013
www.pelcoinc.com

This drawing is for reference only. It is the property of Pelco and is not to be used in whole or in part without Pelco's written permission.

ASSEMBLY SHEET

REF: Electrotechnics

TITLE: Post Top Solar Panel Mount w/ 2" Sign Clamps & Tube, Alum

PART NO.: SP-5934

PART NO
SP-5934-22-PXX
SP-5934-22-T-PXX

Tube Length
With Tether
Process No Color=PNC
Paint=PXX

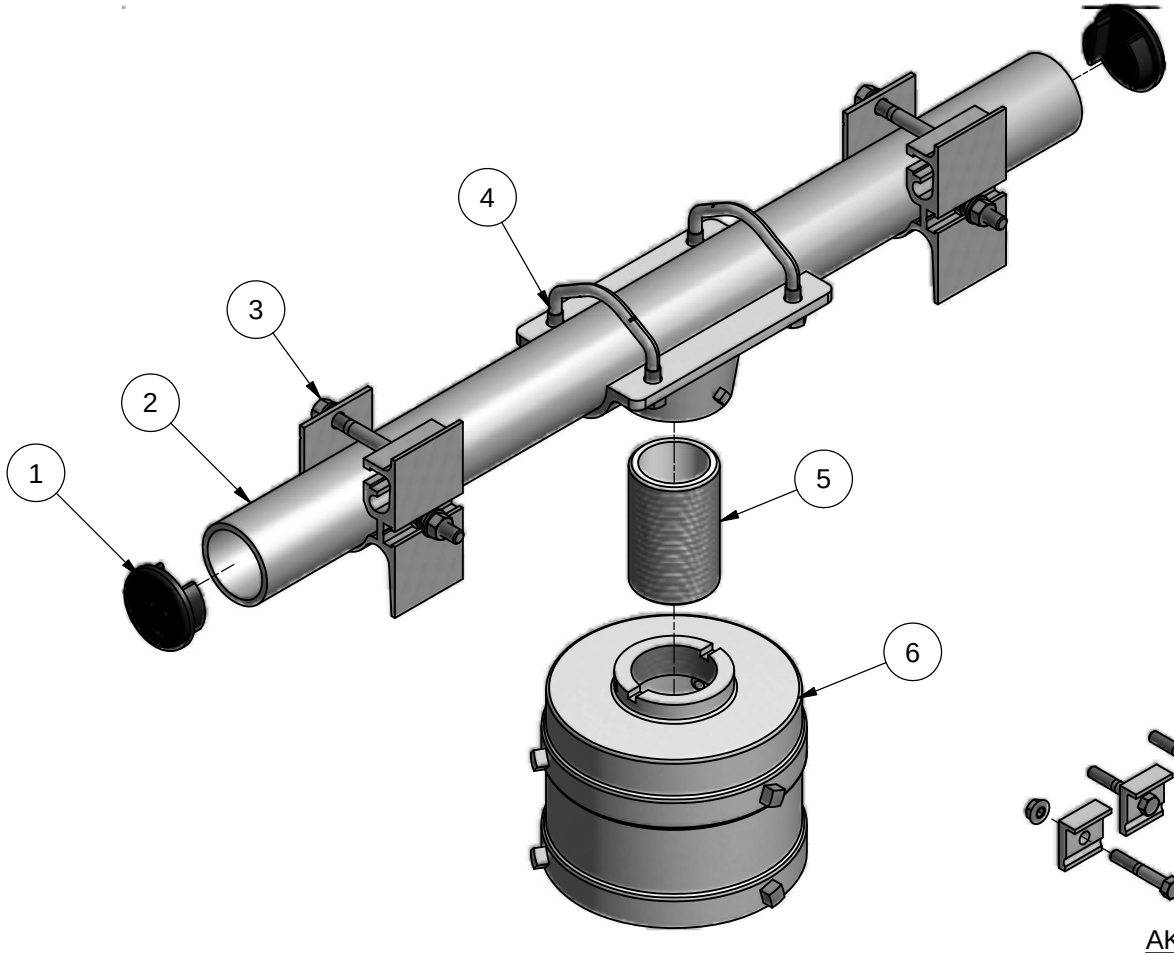

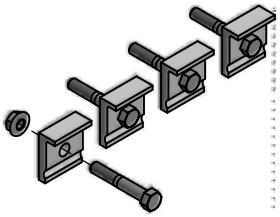

AK-4007
(Optional)

OPTIONS
Tube Length: 30"
T=With Tether (AK-4007)
Paint

ITEM	PART NUMBER	DESCRIPTION	QTY
1	AB-0260-P02	Cap, Tube, Black Semi-Gloss	2
2	SE-0484-L	Tube, 1-1/2" x Length, Alum	1
3	AB-0502-02	Sign Clamp w/ Hardware, Astro-Brac, 2", Alum	2
4	AB-3048-PXX	Tube Saddle Kit w/ 5/16" V-Bolt & Hardware, Alum	1
5	SE-0309-03	Nipple, All Thread 1-1/2" NPS x 3" Alum	1
6	SE-3106-PXX	Slip Fitter, 1-Way, Alum	1

DRAWN:	DATE:	CHECKED:	DATE:	MFG ENG:	DATE:	QA:	DATE:	REV:	DATE:	REV CHK'D:	DATE:	SHEET
CBJ	9/24/2013	KAK	9/24/2013			ZSM	2/24/2014	A	2/24/14 CJO	KAK	2/24/2014	1 OF 1

PelcoVertical.idw 12/16/2013

PELCO PRODUCTS, INC.
PH: 405-340-3434
FAX: 405-340-3435
Edmond, OK 73013
www.pelcoinc.com

This drawing is for reference only. It is the property of Pelco and is not to be used in whole or in part without Pelco's written permission.

ASSEMBLY SHEET

REF:	TITLE:	PART NO.:
	H-Bar, 2-Way Standard, Alum	SP-6025

PART NO
SP-6025-06-PNC

Length

Process No Color

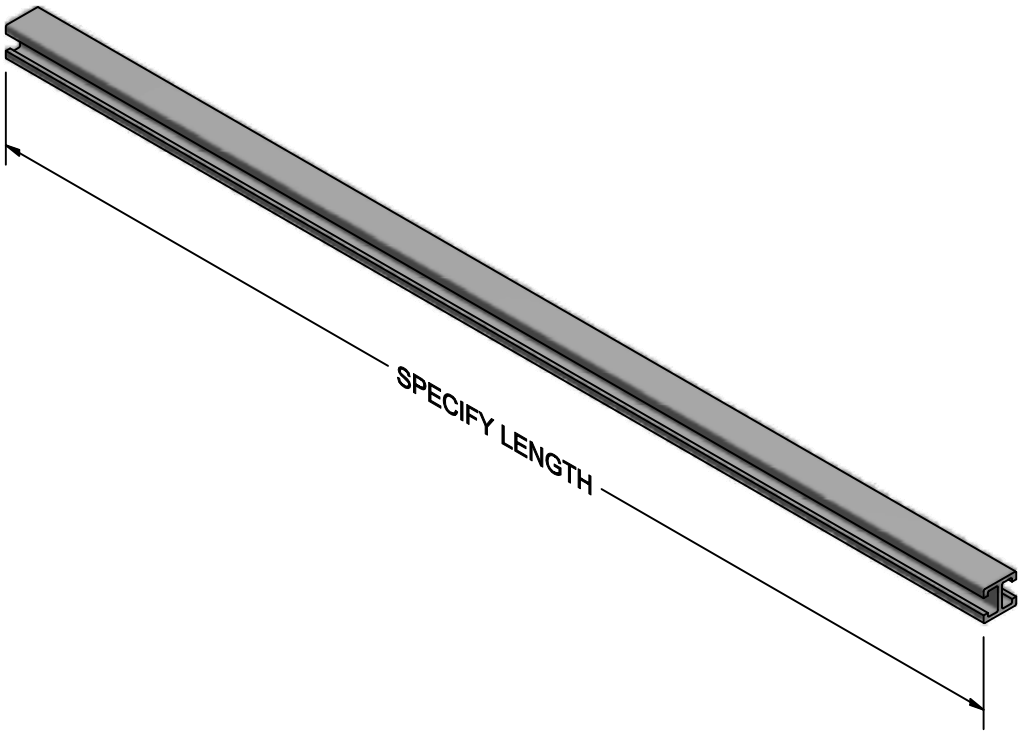

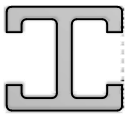

Profile

OPTIONS
Length: 6", 9-1/2", 12", 18", 24", 30", 36", 48", 60"

ITEM	PART NUMBER	DESCRIPTION	QTY
1	SP-6025-L	Bar, H, Standard, x Length, Alum	1

J ROGERS DRAWN:	1/31/2005 DATE:	L QUINN CHECKED:	1/31/2005 DATE:	MFG ENG:	DATE:	QA:	DATE:	B REV:	11/20/13 JTN DATE:	KAK REV CHK'D:	11/20/2013 DATE:	SHEET 1 OF 1

PelcoVertical.idw 9/12/2013

UPG No. 45977

UPG Sealed Lead-Acid Battery

STAY POWERED®

Absorbant Glass Mat (AGM) technology for superior performance. Valve regulated, spill proof construction allows safe operation in any position. Approved for transport by air. D.O.T., I.A.T.A., F.A.A. and C.A.B. certified. U.L. recognized under file number MH 20567.

UB12500

Maintenance-Free

Specification

Nominal Voltage			12 volts
Nominal Capacity			77º F (25º C)
20-hr.	(2.50A)		50.0 Ah
10-hr.	(4.65A)		46.5 Ah
5-hr.	(8.50A)		42.5 Ah
1-hr.	(30.00A)		30.0 Ah
Approximate Weight			30.2 lbs (13.7 kgs)
Internal Resistance (approx.)			11 mΩ
Shelf Life (% of normal capacity at 77º F (25º C))			
3 Months	6 Months	12 Months	
91%	82%	64%	
Temperature Dependancy of Capacity			(20 hour rate)
104º F	77º F	32º F	5º F
102%	100%	85%	65%
AGM Operational Temperature			
Charge		32˚F to 104˚F (0˚C to 40˚C)	
Discharge		5˚F to 113˚F (-15˚C to 45˚C)	
AGM Storage Temperature		5˚F to 104˚F (-15˚C to 40˚C)	

Charge Method (Constant Voltage)	
Cycle Use (Repeating Use)	
Initial Current	15 A or smaller
Control Voltage	14.6 - 14.8 V
Float Use	
Control Voltage	13.6 - 13.8 V

Physical Dimensions: in (mm)

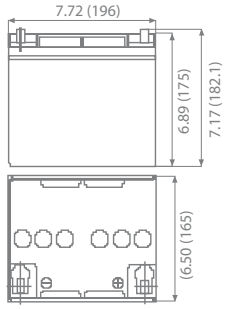

L: 7.72in (196.1 mm)
W: 6.50in (165.1mm)
H: 6.89in (175 mm)
TH: 7.17in (182.1 mm)
Tolerances are +/- 0.04 in. (+/- 1mm) and +/- 0.08 in. (+/- 2mm) for height dimensions. All data subject to change without notice.

Terminals

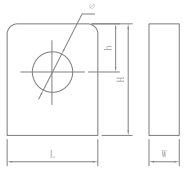

L Series (L Type Terminal)

Type \ Dimension	L	W	H	h	∅
L2	17.0	9.0	17.0	9.0	6.5

Constant Current Discharge Characteristics Unit:A (25°C, 77°F)

F.V/Time	5MIN	10MIN	15MIN	30MIN	1HR	2HR	3HR	4HR	5HR	8HR	10HR	20HR
9.60V	158.2	115.4	81.2	49.2	25.7	15.0	11.0	8.6	7.1	5.0	4.5	2.5
10.20V	139.4	105.2	72.7	46.6	24.1	14.3	10.7	8.3	6.9	4.9	4.4	2.5
10.50V	134.2	100.0	68.4	45.3	23.5	13.9	10.4	8.2	6.8	4.8	4.3	2.5
10.80V	129.1	94.9	64.1	44.0	22.7	13.6	10.2	8.1	6.7	4.7	4.3	2.3
11.10V	124.0	89.8	59.9	42.8	21.8	13.3	9.8	7.8	6.5	4.6	4.1	2.2

Constant Power Discharge Characteristics Unit:W (25°C, 77°F)

F.V/Time	5MIN	10MIN	15MIN	30MIN	1HR	2HR	3HR	4HR	5HR	8HR	10HR	20HR
9.60V	1679.6	1268.4	862.7	522.0	297.1	173.1	127.4	99.2	81.7	57.7	52.2	28.1
10.20V	1547.1	1167.5	806.7	517.3	279.2	165.4	124.0	96.6	64.2	56.4	50.9	27.4
10.50V	1522.3	1134.6	775.5	513.9	270.2	161.6	121.0	94.9	79.1	56.0	50.0	27.0
10.80V	1502.7	1104.7	746.4	512.6	262.9	158.2	118.4	93.2	77.8	54.7	49.6	26.9
11.10V	1475.3	1068.3	712.2	508.7	259.5	157.7	117.1	92.8	77.4	54.3	48.3	26.1

www.upgi.com

ISO 9001 :2008

All specifications subject to change without notice.

488 S. Royal Lane | Coppell, Texas 75019 | P 469.892.1122 | T 866.892.1122 | F 469.892.1123 | sales@upgi.com

UB12500

Maintenance-Free

Discharge Time vs. Discharge Current

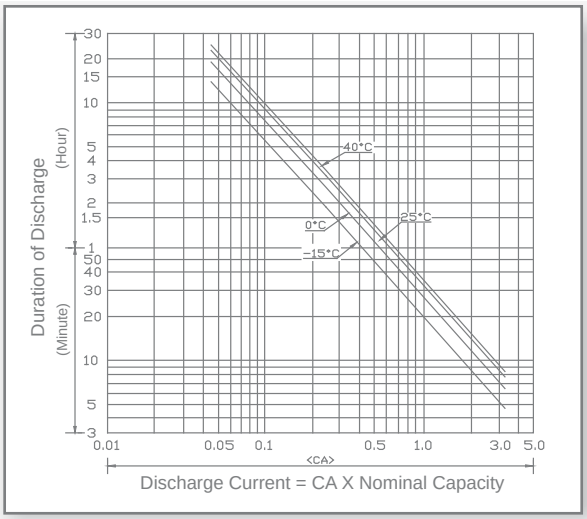

Discharge Characteristics

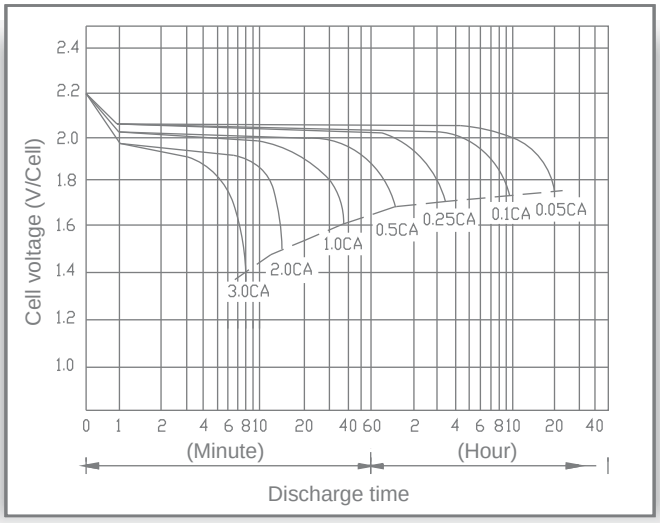

Shelf Life & Storage

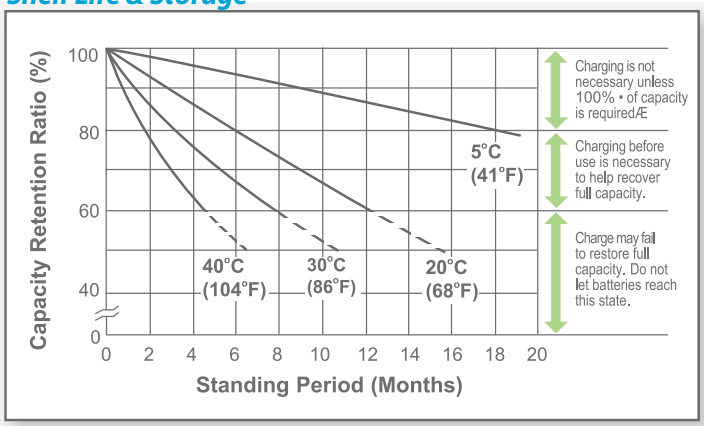

Cycle Life vs Depth of Discharge

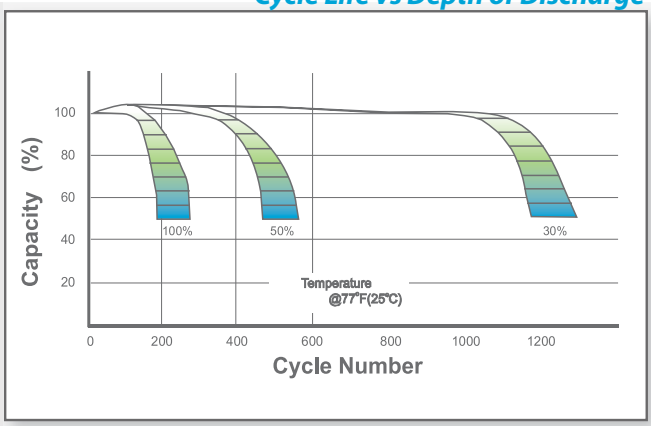

Open Circuit Voltage vs Residual Capacity

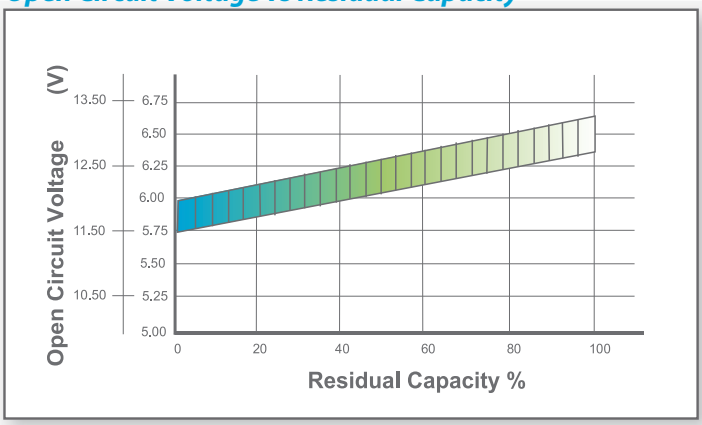

Effect of Temperature on Capacity

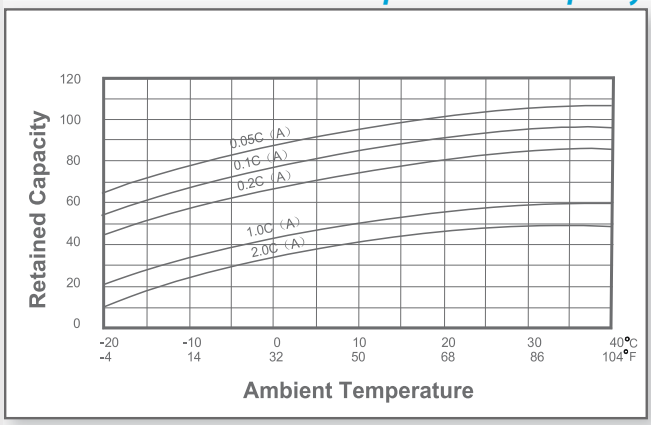

Charge Current & Final Discharge Voltage

Application	Charge Voltage(V/Cell)			Max.Charge Current
	Temperature	Set Point	Allowable Range	
Cycle Use	25℃(77℉)	2.45	2.40~2.50	0.30C
Standby	25℃(77℉)	2.30	2.27~2.30	

Final Discharge Voltage V/Cell	1.75	1.70	1.60	1.30
Discharge Current(A)	0.2C>(A)	0.2C<(A)<0.5C	0.5C<(A)<1.0C	(A)>1.0C