FRONTIER SERIES TABLES

Tables 3-Ply Core - *with Aprons, Square Wood Leg, Steel Plate*

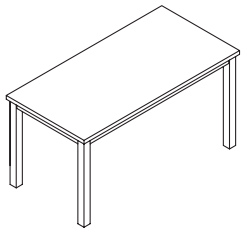

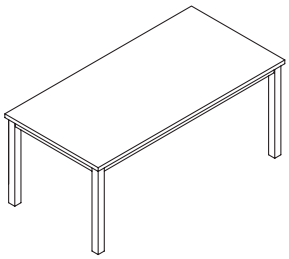

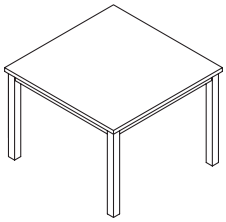

Product Number	Description	WxHxD	WxHxD
5913693350	Frontier Rectangle Table wo/aprons, 29" Height, Flat Steel Plate Square Wood Leg	48x29x30	29x48x30
5913673350	Frontier Rectangle Table wo/aprons, 27" Height, Flat Steel Plate Square Wood Leg	48x27x30	27x48x30
5913793350	Frontier Rectangle Table wo/aprons, 29" Height, Flat Steel Plate Square Wood Leg	60x29x30	29x60x30
5913773350	Frontier Rectangle Table wo/aprons, 27" Height, Flat Steel Plate Square Wood Leg	60x27x30	27x60x30
5913794350	Frontier Rectangle Table wo/aprons, 29" Height, Flat Steel Plate Square Wood Leg	60x29x36	29x60x36
5913774350	Frontier Rectangle Table wo/aprons, 27" Height, Flat Steel PlateSquare Wood Leg	60x27x36	27x60x36
5913795350	Frontier Rectangle Table wo/aprons, 29" Height, Flat Steel Plate Square Wood Leg	60x29x42	29x60x42
5913775350	Frontier Rectangle Table wo/aprons, 27" Height, Flat Steel Plate Square Wood Leg	60x27x42	27x60x42
5913893350	Frontier Rectangle Table wo/aprons, 29" Height, Flat Steel Plate Square Wood Leg	72x29x30	29x72x30
5913873350	Frontier Rectangle Table wo/aprons, 27" Height, Flat Steel Plate Square Wood Leg	72x27x30	27x72x30
5913894350	Frontier Rectangle Table wo/aprons, 29" Height, Flat Steel Plate Square Wood Leg	72x29x36	29x72x36
5913874350	Frontier Rectangle Table wo/aprons, 27" Height, Flat Steel Plate Square Wood Leg	72x27x36	27x72x36
5913895350	Frontier Rectangle Table wo/aprons, 29" Height, Flat Steel Plate Square Wood Leg	72x29x42	29x72x42
5913875350	Frontier Rectangle Table wo/aprons, 27" Height, Flat Steel Plate Square Wood Leg	72x27x42	27x72x42
5913994350	Frontier Rectangle Table wo/aprons, 29" Height, Flat Steel Plate Square Wood Leg	84x29x36	29x84x36
5913974350	Frontier Rectangle Table wo/aprons, 27" Height, Flat Steel Plate Square Wood Leg	84x27x36	27x84x36
5913995350	Frontier Rectangle Table wo/aprons, 29" Height, Flat Steel Plate Square Wood Leg	84x29x42	29x84x42
5913975350	Frontier Rectangle Table wo/aprons, 27" Height, Flat Steel Plate Square Wood Leg	84x27x42	27x84x42
5912595350	Frontier Square Table wo/aprons, 29" Height, Flat Steel Plate Square Wood Leg	42x29x42	29x42x42
5912575350	Frontier Square Table wo/aprons, 27" Height, Flat Steel Plate Square Wood Leg	42x27x42	27x42x42
5912696350	Frontier Square Table wo/aprons, 29" Height, Flat Steel Plate Square Wood Leg	48x29x48	29x48x48
5912676350	Frontier Square Table wo/aprons, 27" Height, Flat Steel Plate Square Wood Leg	48x27x48	27x48x48
5911095350	Frontier Round Table wo/aprons, 29" Height, Flat Steel Plate Square Wood Leg	42x29Diam.	29x42Diam.
5911075350	Frontier Round Table wo/aprons, 27" Height, Flat Steel Plate Square Wood Leg	42x27Diam.	27x42Diam.
5911096350	Frontier Round Table wo/aprons, 29" Height, Flat Steel Plate Square Wood Leg	48x29Diam.	29x48Diam.
5911076350	Frontier Round Table wo/aprons, 27" Height, Flat Steel Plate Square Wood Leg	48x27Diam.	27x48Diam.
5911097350	Frontier Round Table wo/aprons, 29" Height, Flat Steel Plate Square Leg	60x29Diam.	29x60Diam.
5911077350	Frontier Round Table wo/aprons, 27" Height, Flat Steel Plate Square Leg	60x27Diam.	27x60Diam.

FRONTIER SERIES ATLAS AND DICTIONARY STANDS

Product Number	Description	WxHxD
5330-42-5LB	Frontier Series Atlas Leg Base - Adult 5 Pullout Shelves	30x42x30
5330-36-4LB	Frontier Series Atlas Leg Base - Child 4 Pullout Shelves	30x36x30
5330-42-5PB	Frontier Series Atlas Panel Base - Adult 5 Pullout Shelves	30x42x30
5330-36-4PB	Frontier Series Atlas Panel Base - Child 4 Pullout Shelves	30x36x30
5340-42-LB	Frontier Series Dictionary Leg Base Adult1 Base Shelf and 1 Adj Shelf	16x42x24
5340-36-LB	Frontier Series Dictionary Leg Base Child1 Base Shelf and 1 Adj Shelf	16x36x24
5340-42-PB	Frontier Series Dictionary Panel Base Adult 1 Base Shelf and 1 Adj Shelf	16x42x24
5340-36-PB	Frontier Series Dictionary Panel Base Child 1 Base Shelf and 1 Adj Shelf	16x36x24
4350	Revolving Dictionary Stand	15x5x21

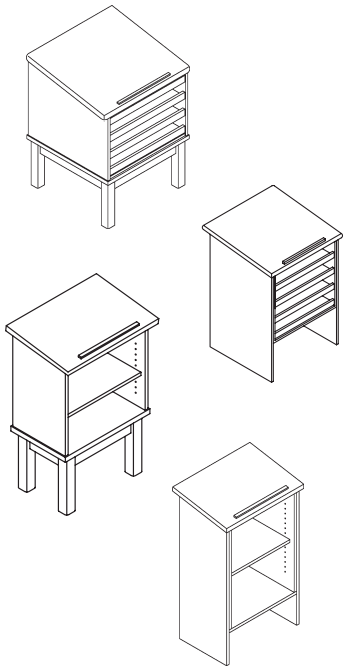

Library Chairs & Stools 700 Series

Product Number	Description
776-SB-18	Chair 700 Series All Wood - Sled Base - Seating Height 17 1/2"
776UB-SB-18	Chair 700 Series GD-100 Fabric Back - Sled Base - Seating Height 17 1/2"
776US-SB-18	Chair 700 Series GD-100 Fabric Seat - Sled Base - Seating Height 17 1/2"
776UBS-SB-18	Chair 700 Series GD-100 Fabric Back & Seat - Sled Base - Seating Height 17 1/2"
776-SB-16	Chair 700 Series All Wood - Sled Base - Seating Height 16"
776UB-SB-16	Chair 700 Series GD-100 Fabric Back - Sled Base - Seating Height 16"
776US-SB-16	Chair 700 Series GD-100 Fabric Seat - Sled Base - Seating Height 16"
776UBS-SB-16	Chair 700 Series GD-100 Fabric Back & Seat - Sled Base - Seating Height 16"
778US-SB	Chair 700 Series GD-100 Fabric Seat w/Arms - Sled Base - Seating Height 17 1/2"
778-UBS-SB	Chair 700 Series GD-100 Fabric Back & Seat w/Arms - Sled Base - Seating Height 17 1/2"
776-18	Chair 700 Series All Wood - Leg Base - Seating Height 17 1/2"
776UB-18	Chair 700 Series GD-100 Fabric Back - Leg Base - Seating Height 17 1/2"
776US-18	Chair 700 Series GD-100 Fabric Seat - Leg Base - Seating Height 17 1/2"
776UBS-18	Chair 700 Series GD-100 Fabric Back & Seat - Leg Base - Seating Height 17 1/2"
776-16	Chair 700 Series All Wood - Leg Base - Seating Height 16"
776UB-16	Chair 700 Series GD-100 Fabric Back - Leg Base - Seating Height 16"
776US-16	Chair 700 Series GD-100 Fabric Seat - Leg Base - Seating Height 16"
776UBS-16	Chair 700 Series GD-100 Fabric Back & Seat - Leg Base - Seating Height 16"
778US	Chair 700 Series GD-100 Fabric Seat w/Arms - Leg Base - Seating Height 17 1/2"
778UBS	Chair 700 Series GD-100 Fabric Back & Seat w/Arms - Leg Base - Seating Height 17 1/2"

Seating - Lounge Chairs

Product Number	Description	Width
84-1	80 Series Lounge -1 Seater - GD-100 Fabric - Leg Base - Seating Depth 19 1/2" Height 15 1/2"	24" Wide
84-2	80 Series Lounge -2 Seater - GD-100 Fabric -Leg Base - Seating Depth 19 1/2" Height 15 1/2"	45" Wide
84-3	80 Series Lounge -3 Seater - GD-100 Fabric -Leg Base - Seating Depth 19 1/2" Height 15 1/2"	65" Wide
84-1-SB	80 Series Lounge -1 Seater - GD-100 Fabric - Sled Base - Seating Depth 19 1/2" Height 15 1/2"	24" Wide
84-2-SB	80 Series Lounge -2 Seater - GD-100 Fabric -Sled Base - Seating Depth 19 1/2" Height 15 1/2"	45" Wide
84-3-SB	80 Series Lounge -3 Seater - GD-100 Fabric -Sled Base - Seating Depth 19 1/2" Height 15 1/2"	65" Wide

PLEASE SEE FOLLOWING PAGES FOR SEATING SAMPLES CHART

FRONTIER SERIES SEATING

776-SB

776-UB-SB

776-US-SB

776-UBS-SB

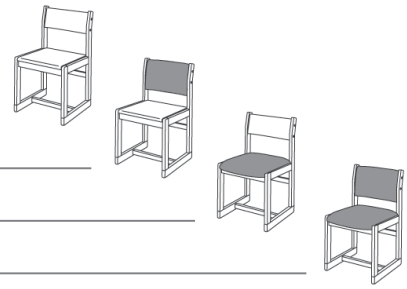

778-SB

778-UB-SB

778-US-SB

778-UBS-SB

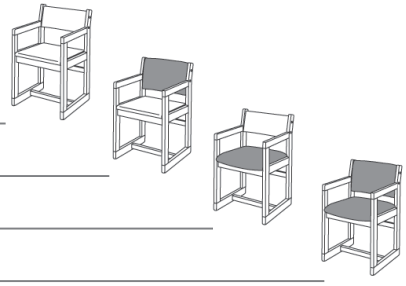

776

776-UB

776-US

776-UBS

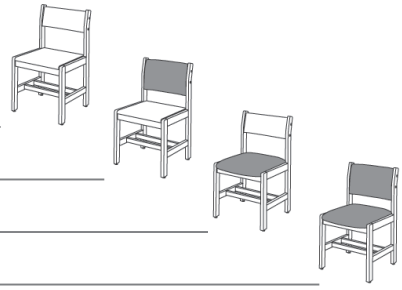

778

778-UB

778-US

778-UBS

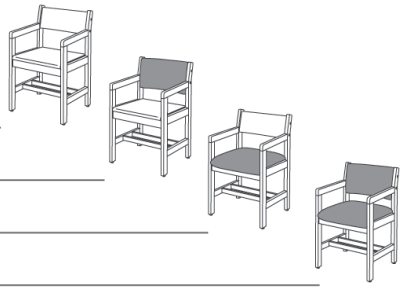

84-1

84-2

84-3

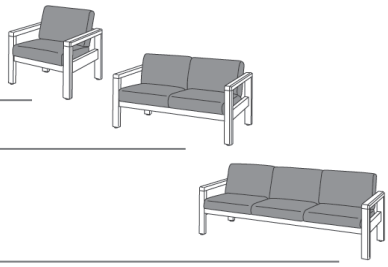

84-1-SB

84-2-SB

84-3-SB

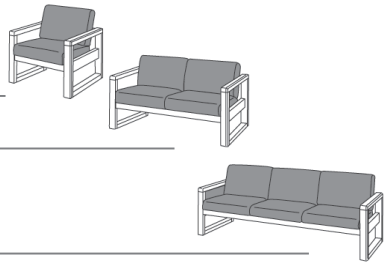

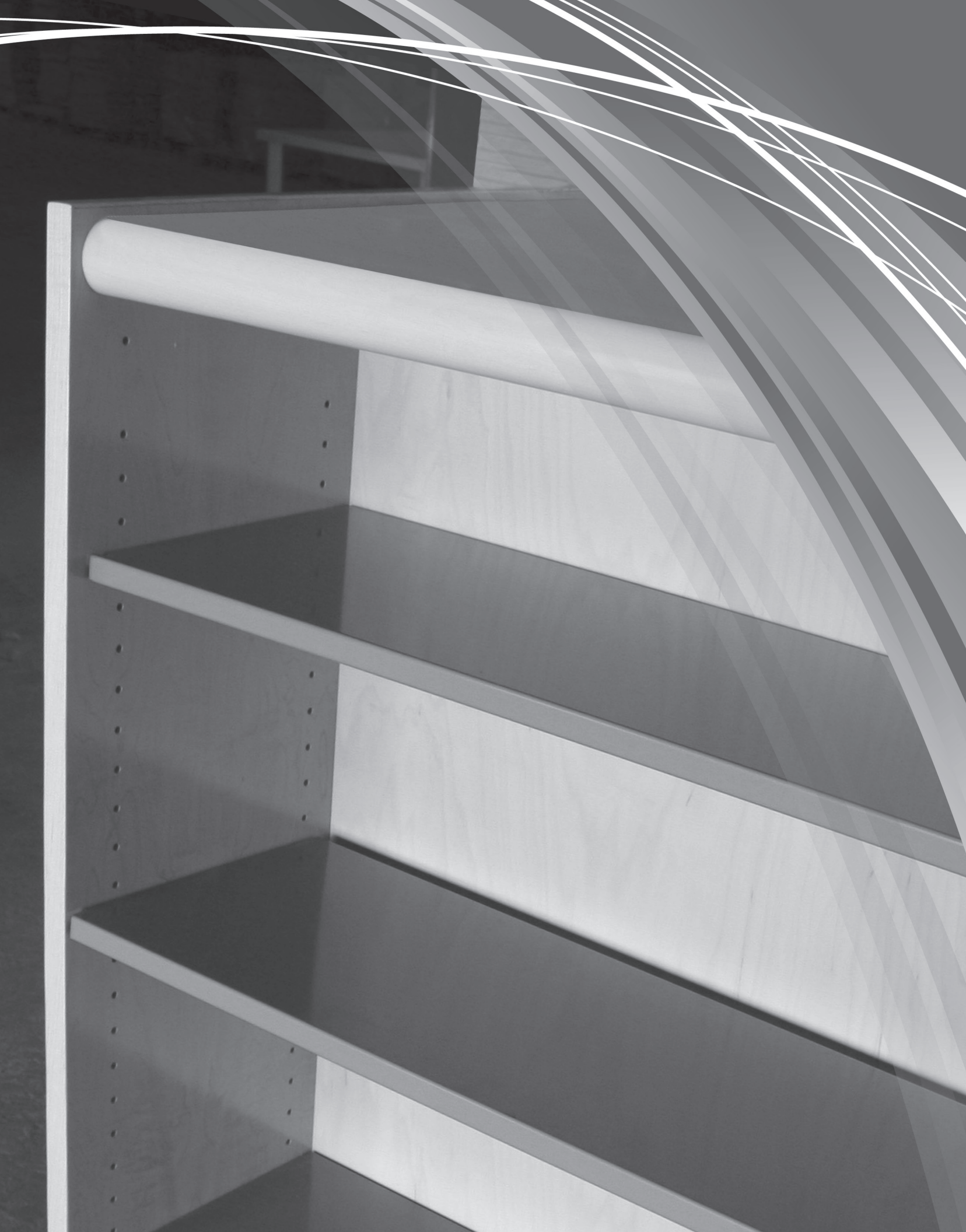

Tesco
Learning Environments

Mission *Series*

MISSION SERIES

KEY FEATURES OF MISSION SERIES

Decorative Trim
Mission Trim is a key feature of the Mission Series products. Circulation Desks, Computer Workstations, Atlas and Dictionary Stands all have the solid Oak (or Maple) trim applied in the Mission Series style. Oak shelving has the option of applied trim to veneer panels or grooved flutes in solid Oak panels. Maple shelving has the option of the applied trim. These optional trim charges can be applied to Double or Single Face Starter panels as desired.

Wood Species
All products in the Mission series are available in either Oak or Maple.
NOTE: For MAPLE items, add the letter M before each item number.

Edge Style
The standard top edge on the Mission series is the beveled edge style.
Alternate edge styles are available but must be specifically requested.

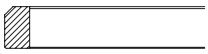

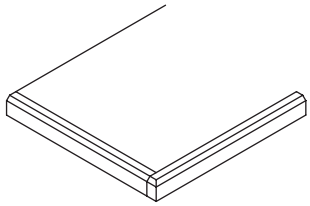

Shelving
Oak End Panels are constructed using 1" thick solid Oak for starter and intermediate panels Maple End Panels utilize a 1" multiply veneer core for starter and intermediate panels. Shelves are 3/4" solid Oak (or Maple). All units come standard with back panels and all units feature solid Oak dovetail jointed frames. Shelving has the option of having continuous tops or "captured" canopy tops. Canopy tops feature the beveled edge fascia.

Tables
Mission Series tables are constructed using a multilayer hardwood veneer top with a 3/4 inch solid Oak (or Maple) drop beveled edge trim. Legs are constructed out of solid Oak (or Maple) and have engraved flutes to add to the style. Mission style trim completes the tables.

Tops
Circulation Desks and Computer Workstation Tops are constructed with a multilayer hardwood veneer core.

Table of Contents

Product	Pages
Circulation Desks	M3
Computer Workstations	M5
Shelving	M7
Tables	M8-M9
Atlas/Dictionary	M11
Series Seating	M12-M13

MISSION Series BY TESCO

MISSION SERIES CIRCULATION DESKS

***For Pricing and Ordering, please use the Patriot Series Circulation Desks, then add the following to get the Mission Series Trim.**

Mission Trim for Circulation Desks

Product Number	Description	WxHxD
Mission Trim	Millwork Trim Option: Non-Radius Only / Priced Per Linear Foot	NA

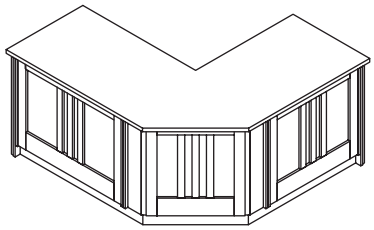

MISSION SERIES 390 COMPUTER WORK STATIONS

***For Pricing and Ordering, please use the Patriot Series 390 Computer Workstations (or the alternate 360 Workstations), then add the following to get the Mission Series Trim on the Starter Units:**

Product Number	Description
MISSIONSF	Millwork Trim Option for Single Face Starters Price Per Starter

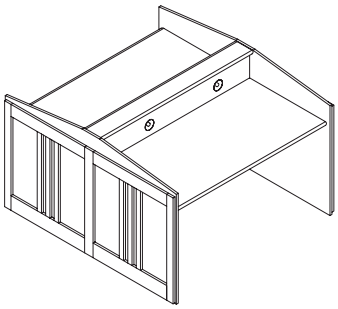

***For Solid Oak End Panels shelving use Patriot Series Shelving for ordering and pricing. For Oak or Maple Veneer End Panel Shelving use Frontier Series Shelving for ordering and pricing.**

Add the following charge per Starter panel to achieve the appropriate Mission Series Trim.

Optional End Panel Mission Decorative Trim - *Flutes in Solid Oak Starter Panels*

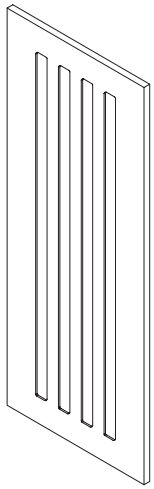

Product Number	Description	WxHxD
MISOAK4224	Oak Double Face Mission Series End Panel Flute Charge (per panel)	24x42
MISOAK4824	Oak Double Face Mission Series End Panel Flute Charge (per panel)	24x48
MISOAK6024	Oak Double Face Mission Series End Panel Flute Charge (per panel)	24x60
MISOAK7224	Oak Double Face Mission Series End Panel Flute Charge (per panel)	24x72
MISOAK8424	Oak Double Face Mission Series End Panel Flute Charge (per panel)	24x84
MISOAK4212	Oak Double Face Mission Series End Panel Flute Charge (per panel)	12x42
MISOAK4812	Oak Double Face Mission Series End Panel Flute Charge (per panel)	12x48
MISOAK6012	Oak Double Face Mission Series End Panel Flute Charge (per panel)	12x60
MISOAK7212	Oak Double Face Mission Series End Panel Flute Charge (per panel)	12x72
MISOAK8412	Oak Double Face Mission Series End Panel Flute Charge (per panel)	12x84

Optional End Panel Mission Decorative Overlay Trim Oak

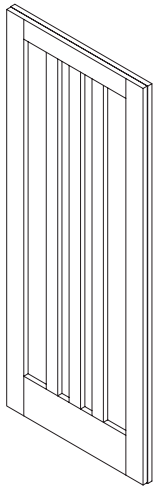

Product Number	Description	WxHxD
MISOAK4224OL	Oak Double Face Mission Series End Panel Overlay Trim Charge (per panel)	24x42
MISOAK4824OL	Oak Double Face Mission Series End Panel Overlay Trim Charge (per panel)	24x48
MISOAK6024OL	Oak Double Face Mission Series End Panel Overlay Trim Charge (per panel)	24x60
MISOAK7224OL	Oak Double Face Mission Series End Panel Overlay Trim Charge (per panel)	24x72
MISOAK8424OL	Oak Double Face Mission Series End Panel Overlay Trim Charge (per panel)	24x84
MISOAK4212OL	Oak Double Face Mission Series End Panel Overlay Trim Charge (per panel)	12x42
MISOAK4812OL	Oak Double Face Mission Series End Panel Overlay Trim Charge (per panel)	12x48
MISOAK6012OL	Oak Double Face Mission Series End Panel Overlay Trim Charge (per panel)	12x60
MISOAK7212OL	Oak Double Face Mission Series End Panel Overlay Trim Charge (per panel)	12x72
MISOAK8412OL	Oak Double Face Mission Series End Panel Overlay Trim Charge (per panel)	12x84

Optional End Panel Mission Decorative Trim for Maple

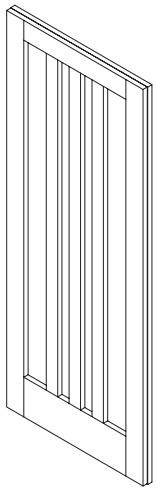

Product Number	Description	WxHxD
MISMPL4224	Maple Double Face Shelving Mission Trim	24x42
MISMPL4824	Maple Double Face Shelving Mission Trim	24x48
MISMPL6024	Maple Double Face Shelving Mission Trim	24x60
MISMPL7224	Maple Double Face Shelving Mission Trim	24x72
MISMPL8424	Maple Double Face Shelving Mission Trim	24x84
MISMPL4212	Maple Single Face Shelving Mission Trim	12x42
MISMPL4812	Maple Single Face Shelving Mission Trim	12x48
MISMPL6012	Maple Single Face Shelving Mission Trim	12x60
MISMPL7212	Maple Single Face Shelving Mission Trim	12x72
MISMPL8412	Maple Single Face Shelving Mission Trim	12x84

Tables With Aprons and Mission Style Wood Legs

Product Number	Description	WxHxD
4913693310L	Rectangle Table w/Aprons & Mission Style Legs 29" Height	48x29x30
4913673310L	Rectangle Table w/Aprons & Mission Style Legs 27" Height	48x27x30
4913793310L	Rectangle Table w/Aprons & Mission Style Legs 29" Height	60x29x30
4913773310L	Rectangle Table w/Aprons & Mission Style Legs 27" Height	60x27x30
4913794310L	Rectangle Table w/Aprons & Mission Style Legs 29" Height	60x29x36
4913774310L	Rectangle Table w/Aprons & Mission Style Legs 27" Height	60x27x36
4913795310L	Rectangle Table w/Aprons & Mission Style Legs 29" Height	60x29x42
4913775310L	Rectangle Table w/Aprons & Mission Style Legs 27" Height	60x27x42
4913893310L	Rectangle Table w/Aprons & Mission Style Legs 29" Height	72x29x30
4913873310L	Rectangle Table w/Aprons & Mission Style Legs 27" Height	72x2730
4913894310L	Rectangle Table w/Aprons & Mission Style Legs 29" Height	72x29x36
4913874310L	Rectangle Table w/Aprons & Mission Style Legs 27" Height	72x27x36
4913895310L	Rectangle Table w/Aprons & Mission Style Legs 29" Height	72x29x42
4913875310L	Rectangle Table w/Aprons & Mission Style Legs 27" Height	72x27x42
4913994310L	Rectangle Table w/Aprons & Mission Style Legs 29" Height	84x29x36
4913974310L	Rectangle Table w/Aprons & Mission Style Legs 27" Height	84x27x36
4913995310L	Rectangle Table w/Aprons & Mission Style Legs 29" Height	84x29x42
4913975310L	Rectangle Table w/Aprons & Mission Style Legs 27" Height	84x27x42
4912595310L	Square Table w/Aprons & Mission Style Legs 29" Height	42x29x42
4912575310L	Square Table w/Aprons & Mission Style Legs 27" Height	42x27x42
4912696310L	Square Table w/Aprons & Mission Style Legs 29" Height	48x29x48
4912676310L	Square Table w/Aprons & Mission Style Legs 27" Height	48x27x48
4911095310L	Round Table w/Aprons & Mission Style Legs 29" Height	42x29Diam.
4911075310L	Round Table w/Aprons & Mission Style Legs 27" Height	42x27Diam.
4911096310L	Round Table w/Aprons & Mission Style Legs 29" Height	48x29Diam.
4911076310L	Round Table w/Aprons & Mission Style Legs 27" Height	48x27Diam.
4911097310L	Round Table w/Aprons & Mission Style Legs 29" Height	60x29Diam.
4911077310L	Round Table w/Aprons & Mission Style Legs 27" Height	60x27Diam.

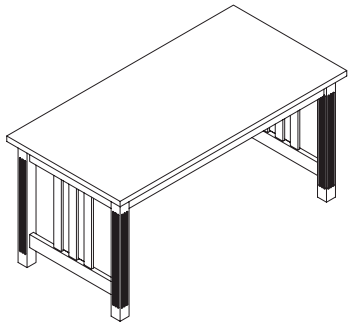

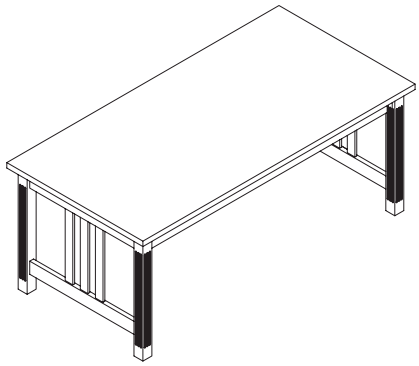

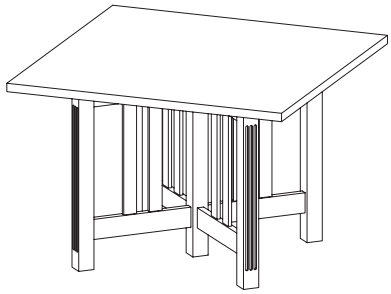

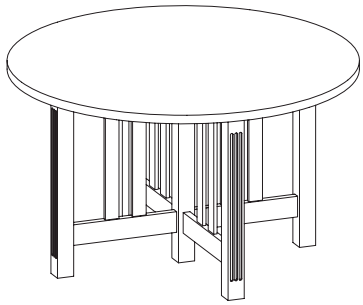

MISSION SERIES ATLAS AND DICTIONARY STANDS

Product Number	Description	WxHxD
4330-42-5LB-M	MISSION SERIES ATLAS LEG BASE - ADULT 5 Pullout Shelves	30x42x30
4330-36-4LB-M	MISSION SERIES ATLAS LEG BASE - CHILD 4 Pullout Shelves	30x36x30
4340-42-LB-M	MISSION SERIES DICTIONARY LEG BASE - ADULT 1 Base Shelf and 1 Adj Shelf	16x42x24
4340-36-LB-M	MISSION SERIES DICTIONARY LEG BASE - CHILD 1 Base Shelf and 1 Adj Shelf	16x36x24
4350	REVOLVING DICTIONARY STAND	15x5x21

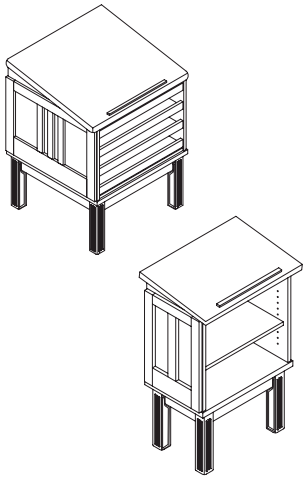

Seating - Library Chairs

Product Number	Description
103	Chair 100 Series All Wood - Leg Base - Seating Height 17 1/2"
104	Chair 100 Series All Wood w/Arms - Leg Base - Seating Height 17 1/2"
104US	Chair 100 Series GD-100 Fabric Seat w/Arms - Leg Base - Seating Height 17 1/2"
103/503	Chair 100 Series All Wood - Leg Base - Seating Height 17 1/2"
107	Chair 100 Series All Wood - Leg Base - Seating Height 17 1/2"
107US	Chair 100 Series GD-100 Fabric Seat - Leg Base - Seating Height 17 1/2"
105	Chair 100 Series All Wood w/Arms - Leg Base - Seating Height 17 1/2"
105US	Chair 100 Series GD-100 Fabric Seat w/Arms - Leg Base - Seating Height 17 1/2"
108-18	Chair 100 Series All Wood - Leg Base - Seating Height 17 1/2"
108US-18	Chair 100 Series GD-100 Fabric Seat - Leg Base - Seating Height 17 1/2"
108-16	Chair 100 Series All Wood - Leg Base - Seating Height 16"
108US-16	Chair 100 Series GD-100 Fabric Seat - Leg Base - Seating Height 16"
108-14	Chair 100 Series All Wood - Leg Base - Seating Height 14"
108US-14	Chair 100 Series GD-100 Fabric Seat - Leg Base - Seating Height 14"
5705	Chair 5700 Series, All Wood, Seating Height 18"
5705US	Chair 5700 Series, GD 100 Fabric Seat, Seating Height 18"

Seating - Lounge Chairs

Product Number	Description
320-1	Lounge chair 320 series, wood arms, grade 100 fabric seat, one position
320-2	Lounge chair 320 series, wood arms, grade 100 fabric seat, two position
320-3	Lounge chair 320 series, wood arms, grade 100 fabric seat, three position
5760-1WS	Lounge chair 5700 series, wood arms, grade 100 fabric seat, one position
5760-2WS	Lounge chair 5700 series, wood arms, grade 100 fabric seat, two position
5760-3WS	Lounge chair 5700 series, wood arms, grade 100 fabric seat, three position

PLEASE SEE FOLLOWING PAGES FOR SEATING SAMPLES CHART

MISSION SERIES SEATING

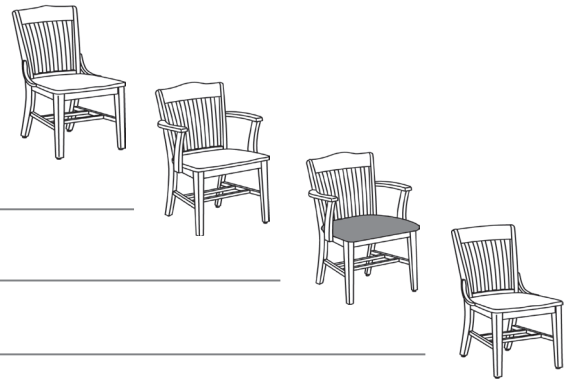

103

104

104-US

103/503

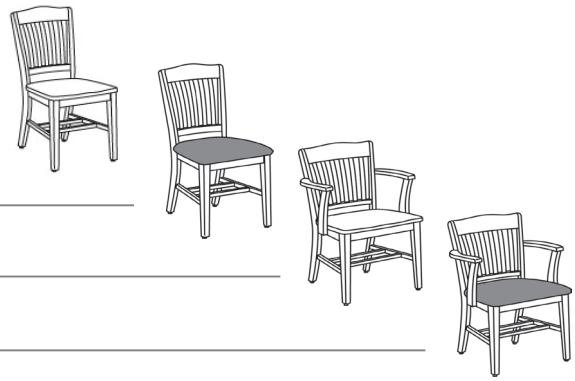

107

107-US

105

105-US

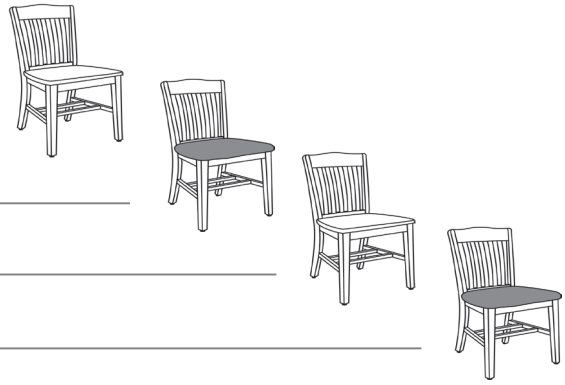

108-18

108-US-18

108-16

108-US-16

MISSION SERIES SEATING

108-14

108-US-14

5705

5705-US

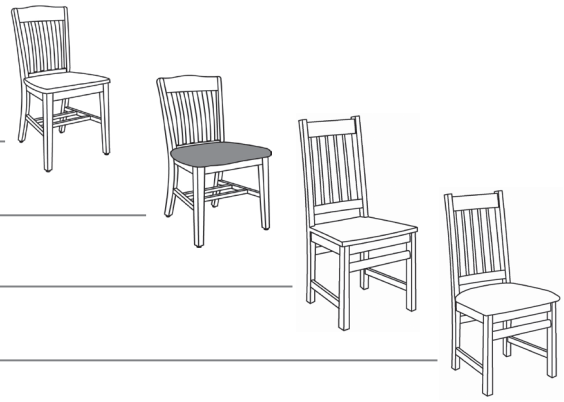

320-1

320-2

320-3

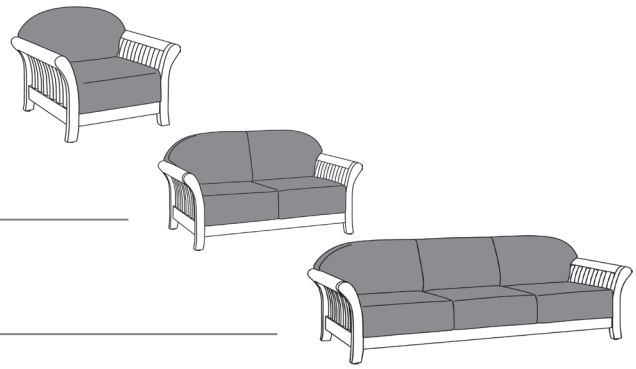

5760-1-WS

5760-2-WS

5760-3-WS

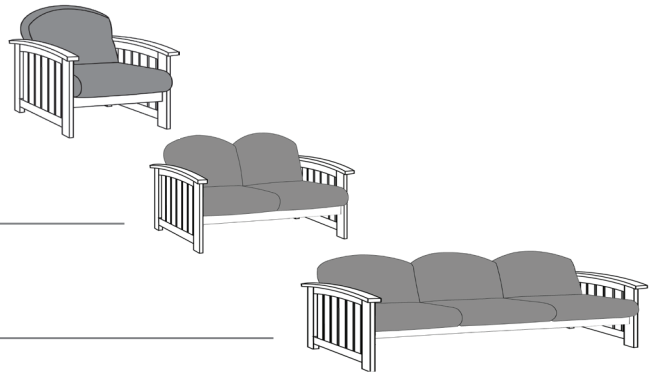

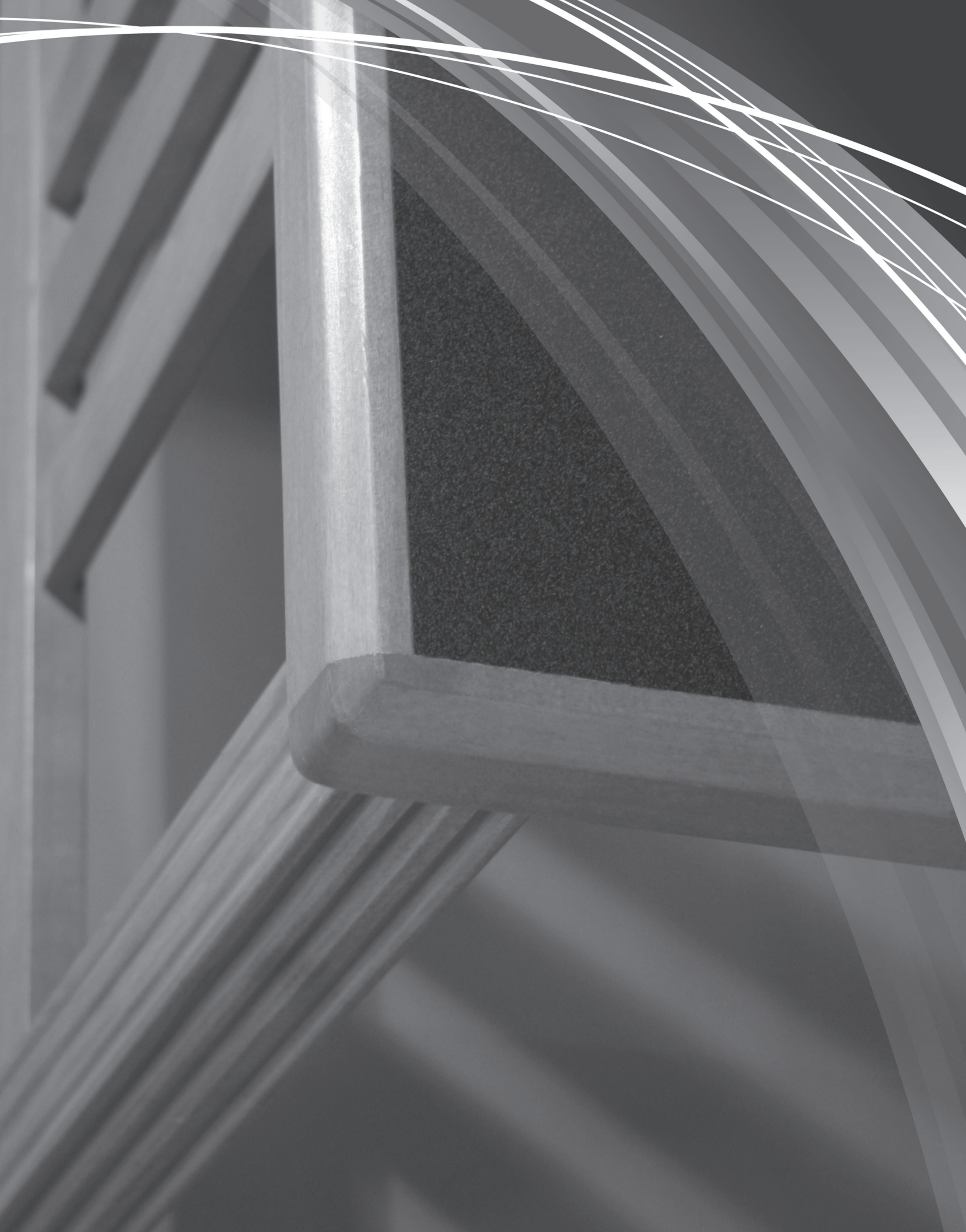

Tesco
Learning Environments

St. Louis *Series*

ST. LOUIS SERIES

KEY FEATURES OF ST. LOUIS SERIES

Decorative Trim
St. Louis Millwork trim is a standard feature and included in the pricing of St. Louis series products. Circulation Desks, Computer workstations, Atlas and Dictionary stands all have the solid Oak (or Maple) 3/4" trim applied in the St. Louis series style. Double Face Shelving Starter End panels will have the same trim applied. The trim is optional on Single Face Starter End Panels.

Wood Species
All products in the St. Louis series are available in either Oak or Maple.
NOTE: For MAPLE items, add the letter M before each item number.

Edge Style
The standard top edge on the St. Louis series is the Chamfered edge style.
Alternate edge styles are available but must be specifically requested.

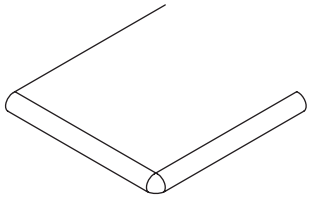

Shelving
End Panels utilize a 1" multiply veneer core for starter and intermediate panels. Shelves are 3/4" solid Oak (or Maple). All units come standard with back panels and all units feature solid Hardwood dovetail jointed frames. Shelving has the option of having continuous tops or "captured" canopy tops. Canopy tops feature the arched edge fascia to complete the St. Louis style.

Tables
St. Louis Series tables are constructed using a multilayer hardwood veneer top with a 2 inch solid Oak (or Maple) drop chamfered edge trim. Round Tapered legs are constructed out of solid Oak (or Maple). Tables have arched aprons to complete the style.

Tops
Circulation Desks and Computer Workstation Tops are constructed with a multilayer hardwood veneer core and have a 3/4" solid Oak (or Maple) chamfered edge.

Table of Contents

Product	Pages
Circulation Desks	S3
Computer Workstations	S5
Shelving	S7-S10
Tables	S11
Atlas/Dictionary	S13
Series Seating	S15

ST. LOUIS Series BY TESCO

ST. LOUIS SERIES TRIM FOR CIRCULATION DESKS

***For Pricing and Ordering, please use the Patriot Series Circulation Desks, then add the following to get the St. Louis Series Trim in lieu of the Patriot Series Trim:**

St. Louis Trim for Circulation Desks
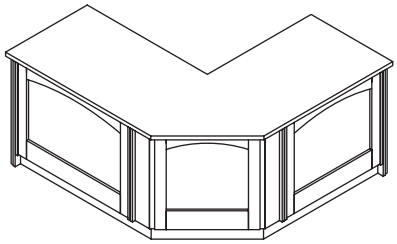
Product Number	Description	WxHxD
St. Louis Trim	Millwork Trim Option: Non-Radius Only / Priced Per Linear Foot	NA