HAWORTH®

# workware™

## North America Price List / Specification Guide – April 2018

This Haworth North American price book contains US list prices.

Canadian customers can convert the US list price into their Canadian equivalent by going to www.Haworth.com/Canada to find the current Canadian multipliers. These multiplier factors allow you to convert the US list price into a Canadian list price.

# Price Book Overview

The following list gives a general overview of the content included within this price book (price list and specification guide) and explains how the book is organized and where information can be found.

## ❶ Front Cover

- Includes the title and pricing effectivity date.

## ❷ Electronic Update Page / Canadian Conversion

- Electronic versions of the Price Book (.pdf files) will include an Electronic Update Page listing the most recent updates and addendum added since the original version was created. If this section is blank no updates or addendums have been added.
- Each update will include a description, page number, date and a link to the updated or new page.
- The footer contains Canadian conversion information for converting US pricing into the Canadian equivalent.

## ❸ Table of Contents

- Price List content with page numbers.

## ❹ Price List

Each price list page contains the following:

- Product Illustration
- Catalog Number
- To Order Specify – sequencing for ordering product options and finishes
- List Prices
- Product Specification Dimensions
- Features
- Specification Tips
- Class, Discount Group Number (used for discounting) and GSA information

## ❺ Specification Guide

- Table of Contents – specification guide content with page numbers
- Statement of Line – provides a pictorial outline of the product offering
- Product Overview – brief introduction of the product and application intent
- Easy Planning Steps – basic steps of planning with the product line
- Product Details – product attributes, dimensions, surface materials and functionality
- Product Application – vertical and horizontal planning guidelines including support and load, power, and storage
- Technical Specifications – provides performance ratings, material composition and manufacturing process information

## ❻ Finishes, Fabrics and COM

- Lists information for material finishes and availability.
- Provides COM information and requirements (if applicable).

## ❼ North American Terms of Sale

- Haworth terms for ordering, pricing, shipping and delivery, general terms, and services.

## ❽ Index

- Products are listed alphabetically by alpha-numeric catalog numbers with price list page number.

## ❾ Product Non-Obsolescence and Warranty Policy

- Provides Haworth policy for non-obsolescence and warranty.

# Additional Information and Resources

Prices are subject to change without notice or approval. Haworth dealers should always submit proposals through Lynx before presenting to customers. See North American Terms of Sale for more information.

## Online Resources

**haworth.com**

- Haworth's corporate website provides access to price books and a variety of other resources and publications.

**surfaces.haworth.com**

- Website provides access to the most current fabrics and finishes offered across Haworth's various product lines.

❶

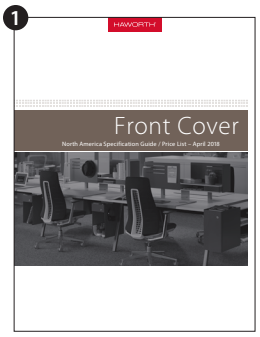


❷

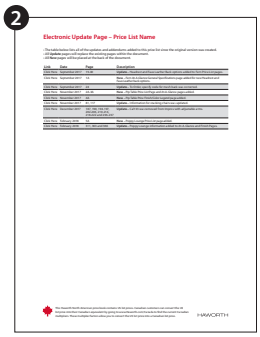


❸

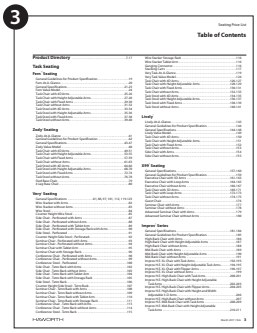


❹

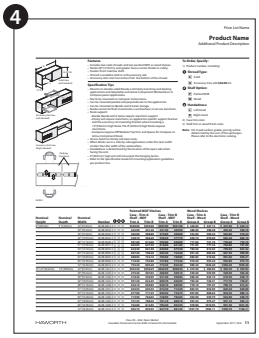


❺

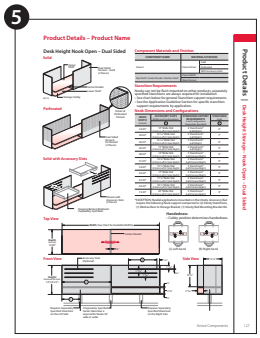


❻

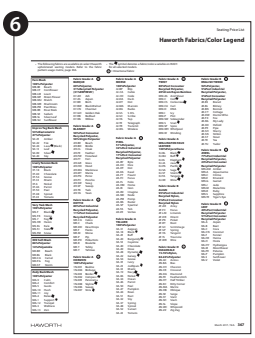


❼

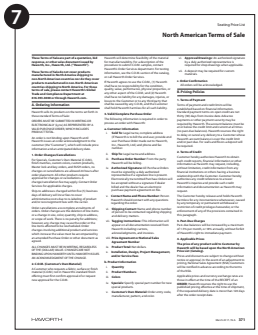


❽

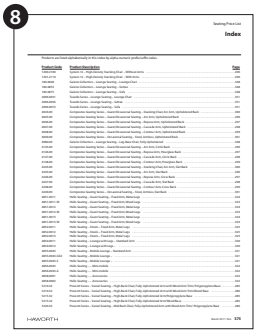


❾

# Table of Contents


## workware

workware connect Catalog Logic . . . . . 5
workware view Catalog Logic . . . . . 6
Non-Switching Interface Module – Port Options . . . . . 7
Switching Interface Module – Port Options . . . . . 8

## workware connect

Interface Modules – Non- Switching 4-Port and 6-Port . . . . . 9
Interface Module — Non-Switching – 4-Port and 6-Port Narrow – Corded . . . . . 13
Interface Module — Non-Switching – 4-Port and 6-Port Narrow – Spiral Corded – Height Adjustable . . . . . 16
Interface Module — Non-Switching – 4-Port and 6-Port Narrow – Corded – Height Adjustable . . . . . 18

## workware connect

Interface Module — Non-Switching – 4-Port and 6-Port Narrow – Hardwire . . . . . 21

## workware connect

Interface Modules – Switching 4-Port and 6-Port . . . . . 25

## workware Wireless

workware Wireless Base . . . . . 28
workware Wireless Pro . . . . . 28
workware Wireless Base and Pro Maintenance Agreement and Software Upgrade . . . . . 28

## workware view

Table Mount With Shroud . . . . . 29
Table Mount With Shroud Dual Monitor . . . . . 29
Enclose® Walls – Proud Mount – Single Monitor With Shroud . . . . 30
Enclose® Walls – Proud Mount – Dual Monitor With Shroud . . . . . 30
Structural Walls – Proud Mount – Single Monitor With Shroud . . . 31
Structural Walls – Proud Mount – Dual Monitor With Shroud . . . . 31

## workware Accessories

Power Relay Data Cable . . . . . 32
HDMI or VGA Cable . . . . . 32
Audio Cable – 3.5mm . . . . . 32

## Electrical Components

Cables . . . . . 33
Retrofit USB Charging Cable . . . . . 33

## workware Accessories

Power Relay Adapter Cord . . . . . 34
Camera Mount Shelf . . . . . 34
Cable Base . . . . . 35
Cable Base Cable Retractor . . . . . 35
Cable Column . . . . . 36
Processor Bracket . . . . . 37
Wire Manager – Horizontal . . . . . 37

## workware view

Mobile Monitor Easel – No Interface Module . . . . . 38
Mobile Monitor Easel – For Non-Switching Interface Module . . . . 39
Tile for Mobile Monitor Easel – No Interface Module . . . . . 40
Tile for Mobile Monitor Easel – Switching or Non-Switching Interface Module . . . . . 41
Shelf Tile for Mobile Monitor Easel – No Interface Module . . . . . 42
Shelf Tile for Mobile Monitor Easel – For Switching or Non-Switching Interface Module . . . . . 43

## workware connect

Interface Module for Easel – Non-Switching 6-Port . . . . . 44

## Finishes

workware Legacy Finishes . . . . . 45
workware Preferred Finishes . . . . . 45
Wood Finishes . . . . . 46
Fabrics/Color Legend. . . . . 47-48

## Terms of Sale

North American . . . . . 49-52

## Index . . . . . 53-54

## Warranty Policy . . . . . Inside Back Cover

# workware connect — Catalog Logic

**Example:** workware interface module, wide, four receptacles, two data/one HDMI/one VGA video cables, switching, phone cord access, slider cover, anodized aluminum, black receptacles, corded. **Note:** Refer to pages 160-166 for orderable product.

**Switching**

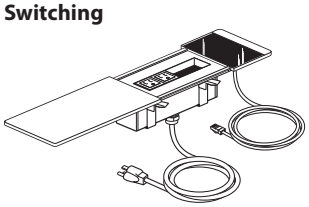

**Non-Switching**

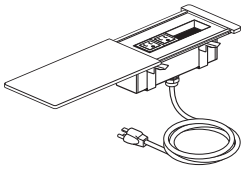

E W C A - 4R 2C - C P S C B N PW

**CC** – Hardwire
**PW** – Corded

**N** – NA

**B** – Black Receptacles

**Slider Color:**
**C** – Anodized
**P** – Painted

**S** – Slider

**P** – Phone Cord Access

**Switching:**
**C** – Yes
**N** – No

**Data Options:**
**NN** – no data/no cables
**2D** – 2 data ports
**3D** – 3 data ports
**2C** – 1 HDMI/1 VGA video cables
**2H** – 2 HDMI video cables
**2V** – 2 VGA video cables
**4C** – 2 HDMI/2 VGA video cables
**4H** – 4 HDMI video cables
**2B** – 2 cable bays
**4B** – 4 cable bays
**4V** – 4 data/4 VGA video cables

**Power Options:**
**2R** – 2 receptacles
**2A** – 1 receptacle/1 USB power
**3R** – 3 receptacles
**3A** – 2 receptacles/1 USB power
**3B** – 1 receptacle/2 USB power
**4R** – 4 receptacles
**4A** – 2 receptacles/2 USB power
**6R** – 6 receptacles
**6A** – 3 receptacles/3 USB power

**Width:**
**A** – Wide
**B** – Narrow

**C** – Connect

**W** – workware

**E** – Electrical

# workware view — Catalog Logic

**Example:** workware view table mount, single 40″/42″ monitor with shroud and shelf, painted.

E W V T - S A S D - P P

**Finish/Wall:**
**P** – Painted
**N** – No Finish

**Finish/Mount:**
**P** – Painted/Table
**P** – Proud/Wall

**Shelf:**
**D**– Deep
**N**– No Shelf

**S** – Shroud
**N**– No Shroud

**Monitor Size:**
**A** – 40″/42″ Table
46″/47″ Wall
**B** – 46″/47″ Table
52″/55″ Wall
**C** – 65″/70″ Wall

**S** – Single
**D** – Dual

**T** – Table
**E** – Enclose Wall
**D** – Structural Wall

**V** – View

**W** – workware

**E** – Electrical

## Non-Switching Interface Module – Port Options

### 4 Port – Non-Switching – Port Options

**1 Power Port Options**

- **2R** (2) Power Receptacles
- **2A** (1) Power Receptacles and (1) USB Charging

- **2R** (2) Power Receptacles
- **2A** (1) Power Receptacles and (1) USB Charging

- **4R** (4) Power Receptacles
- **4A** (2) Power Receptacles and (2) USB Charging

**2 Data / Cable Port Options**

- **2B** (1) Cable Bay
  - Occupies (2) Port Locations
  - Cables Separately Specified
- **2D** (2) Data Access Ports
- **NN** No Data/No Cables

### 6 Port – Non-Switching – Port Options

**1 Power Port Options**

- **4R** (4) Power Receptacles
- **4A** (2) Power Receptacles and (2) USB Charging

- **2R** (2) Power Receptacles
- **2A** (1) Power Receptacles and (1) USB Charging

- **3R** (3) Power Receptacles
- **3A** (2) Power Receptacles and (1) USB Charging
- **3B** (1) Power Receptacles and (2) USB Charging

- **6R** (6) Power Receptacles
- **6A** (3) Power Receptacles and (3) USB Charging

**2 Data / Cable Port Options**

- **2B** (1) Cable Bay
  - Occupies (2) Port Locations
  - Cables Separately Specified
- **4B** (2) Cable Bays
  - Occupies (4) Port Locations
  - Cables Separately Specified
- **3D** (3) Data Access Ports
- **NN** No Data/No Cables

**Note**
- Configuration and quantity of power and data ports can not be modified in the field.
- Audio/Video Cables are separately specified for Non-Switching Interface Units. Cables must be specified at the proper length required to reach from the users device to the Monitor.

### 1 Power Port Options:

**Power Receptacles**
- Conventional 3 prong Power Receptacle (black)

**USB Charging Receptacles**
- Includes 2 USB receptacles per port. (black)
- USB charging only – No data.

**R Power Receptacles Only**

- **2R**
- **3R**
- **4R**
- **6R**

**A Both Power Receptacles and USB Charging Receptacles**
(even numbers or majority power receptacles)

- **2A**
- **3A**
- **4A**
- **6A**

**B Both Power Receptacles and USB Charging Receptacles**
(majority USB charging receptacles)

- **3B**

### 2 Data/Cable Port Options:

**Cable Bay**
- A reservoir that holds audio/video cables (black).
- A single Cable Bay accommodates a maximum of two video cables and occupies two ports in the Interface Module.

Cable Bay

**Data Access Ports**
- The Data Access Port option includes a tree of multiple data jack adapters used to accommodate most types of field supplied RJ45 data jacks.
- The VGA and microphone data jack adapters, included with the Data Jack Adapter Tree, may not be used because of clearance issues.
- Blank data covers are also included if data access is not required.
- Additional data jack adapters are available through eParts.

Data Access Port

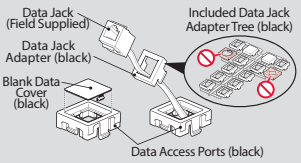


**B Cable Bay** (No Cables)

- **2B**
- **4B**

**D Data Access Port**

- **2D**
- **3D**

**NN No Data/No Cables**

# workware connect

## Switching Interface Module – Port Options

### 4 Port – Switching – Port Options

**1 Power Port Options**

- **2R** (2) Power Receptacles
- **2A** (1) Power Receptacles (1) USB Charging

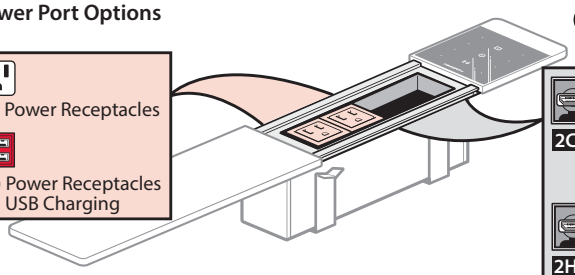

**2 Data / Cable Port Options**

- **2C** (1) Cable Bay (1) HDMI Cable (1) VGA+Audio Cable
- **2H** (1) Cable Bay (2) HDMI Cables
- **2V** (1) Cable Bay (2) VGA+Audio Cables

### 6 Port – Switching – Port Options

**1 Power Port Options**

- **4R** (4) Power Receptacles
- **4A** (2) Power Receptacles (2) USB Charging

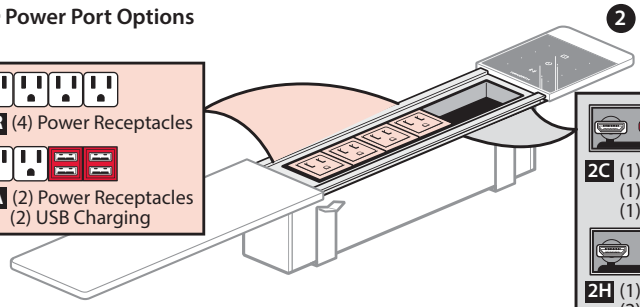

**2 Data / Cable Port Options**

- **2C** (1) Cable Bay (1) HDMI Cable (1) VGA+Audio Cable
- **2H** (1) Cable Bay (2) HDMI Cables
- **2V** (1) Cable Bay (2) VGA+Audio Cables

- **2R** (2) Power Receptacles
- **2A** (1) Power Receptacles (1) USB Charging

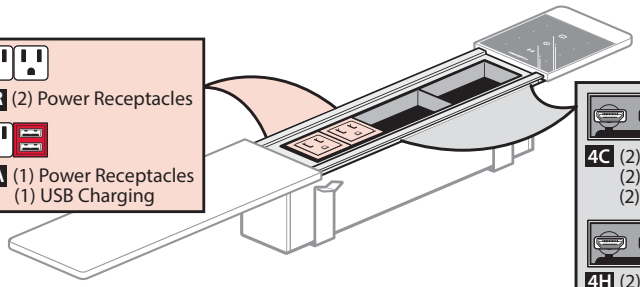

- **4C** (2) Cable Bays (2) HDMI Cables (2) VGA+Audio Cables
- **4H** (2) Cable Bays (4) HDMI Cables
- **4V** (2) Cable Bays (4) VGA+Audio Cables

**Note** • Configuration and quantity of power and data ports can not be modified in the field.

## 1 Power Port Options:

### Power Receptacles

- Conventional 3 prong Power Receptacle. (black)

### USB Charging Receptacles

- Includes 2 USB receptacles per port. (black)
- USB charging only – No data.

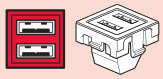

### R Power Receptacles Only

- **2R**
- **4R**

### A Both Power Receptacles and USB Charging Receptacles

- **2A**
- **4A**

## 2 Data/Cable Port Options:

### Cable Bay

- A reservoir that holds and provides access to audio/video cables (black).
- A single Cable Bay accommodates a maximum of two video cables.
- Each cable bay occupies two ports in the Interface Module.

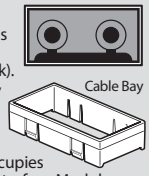


### HDMI Cable

- Transmits digital video and audio content.
- HDMI Cable is 10' long (black).

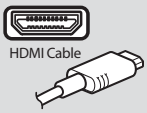


### VGA+Audio Cable

- Transmits analog video and audio content.
- The 3.5mm audio cable extends 20" from the VGA connector head on the user end and 8" on the end that connects to workware.
- VGA Cable and Audio Cable are 12' long (black).

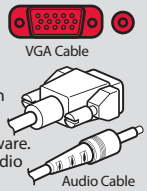


### C Both HDMI cables and VGA and Audio cables

- Includes Cable Bay(s) and a mix of 10' HDMI Cables, and 12' VGA+ Audio Cables.

- **2C**
- **4C**

### H HDMI Cables Only

- Includes Cable Bay(s) and a number of 10' HDMI Cables.

- **2H**
- **4H**

### V VGA+Audio Cables Only

- Includes Cable Bay(s) and a number of 12' VGA+Audio Cables.

- **2V**
- **4V**

# workware connect

## Interface Modules – Non-Switching 4-Port and 6-Port

### Wide

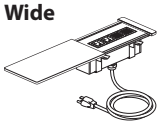

EWCA

### Narrow

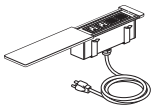

EWCB

### Features

- Includes interface module with sliding door, ports for power receptacle(s), optional data jack adapters, phone cord access and attachment hardware.
- Power cord, cable bay, receptacles and data jack adapter plates are black.
- Data jack adapters accommodate most varieties of field supplied data jacks and includes blank data covers.
- Excludes VGA and microphone adapters.
- Interface module bezel is clear anodized aluminum; sliding door and end trim are available in trim colors indicated.
- Corded interface module includes 12 foot black, 15 Amp cord with plug.
- Hardwire interface module includes 6 foot flexible metal conduit feed with wires for hardwire connection.
- Interface Module overall height is 2 3/4″; will extend below the horizontal surface and extend above surface 0.35″.
- **Power Option/USB or Receptacle Power Combination Options:**
  –one, two, three, four or six power outlets with possible combinations:
  – (2) can be combined with (R) and (A) USB/receptacle options
  – (3) can be combined with (R), (A) and (B) USB/receptacle options
  – (4) can be combined with (R) and (A) USB/receptacle options
  – (6) can be combined with (R) and (A) USB/receptacle options
  (R) - Receptacles - 15 Amp NEMA 5-15R configuration
  (A) - Both USB charging and Receptacles - (3A) is two receptacles and one USB
  (B) - Both USB charging and Receptacles - (3B) is one receptacle and two USB
- **Data Outlets/Data Port or Data Cable Combination Options:**
  –**For use with Non-Switching workware connect module:**
  – (NN) - no data/no ports
  – (2D) - two data ports
  – (3D) - three data ports
  – (2B) - two cable bays for field supplied cables
  – (4B) - four cable bays for field supplied cables
  **Example:** Refer to pages 158 and 159 for additional information.
  (3D) - 6 Port, Non-Switching: three data/three data ports
- Interface module ships for field installation; field modification required to horizontal top for touch control/phone access which will deface top. Reference Specification Guide for dimensions.

### Specification Tips

- Interface Modules require field modification to horizontal top for installation; refer to Application Guide for dimensions and field-cut information.
- Provides power, data, communication and audio/video access for users; may be specified with a variety of port configurations to fit user requirements.
- Configuration and quantity of power and data ports cannot be modified in the field.
- Audio/Video Cables are separately specified for Non-Switching Interface Units. Cables must be specified at the proper length required to reach from the user's device to the Monitor.
- Requires a cable base be located directly below non-switching interface module to house user cables, power and data cables and optional cable retractor; refer to Application Guide for cable base guidelines.
- 4-Port/Wide/Non-Switching – Interface Modules may be installed on tables specified with the standard Flip Top Unit cutout options (-F) or (-V); 6-Port/Wide/ Non-Switching – Interface Modules may be installed on tables specified with the standard Flip Top Unit cutout options (-J) or (-K). These standard cutout options do not provide access for the communication opening to run a phone cable.
- Selected user AV cables extend 48″ from Cable Bay without use of a Cable Retractor and 34″ with a Cable Retractor.

### Specification Tips, cont.

- For use with 120 volt 60 hertz power source only.
- Electrical application requires prior approval by authority having jurisdiction.
- The following workware products and accessories are specified separately:
  –Cable Base
  –Wire Management
  –Cable Retractor
  –Audio/Video Cables
  –HDMI Coupler

### To Order, Specify:

1) Product number, including:

**❶ Power Access**

**CC** Hardwire, add **$64.90** list

**PW** Corded

2) Trim Color for Sliding Door/End Trim.
   - ZA-MT – Anodized Aluminum
   - Painted
     TR-K – Charcoal
     TR-J – Graphite
     TR-PLS – Smooth Plaster

# workware connect

| Top Width | Top Depth | Configuration | Trim Color | Flip Top Unit Cut Out Codes* | Number ❶ | Price |
|---|---|---|---|---|---|---|
| **Wide Interface Module** | | | | | | |
| **Non-Switching - 4 Port** | | | | | | |
| 5″(127mm) | 9 5/8″(244mm) | 2 Power Receptacles, 1 Cable Bay | Anodized | F, V | EWCA-2R2B-NPSCBN | **$ 892.41** |
| | | 1 Power Receptacle, 1 USB Charging, 1 Cable Bay | | | EWCA-2A2B-NPSCBN | **1173.87** |
| | | 2 Power Receptacles, 2 Data Ports | | | EWCA-2R2D-NPSCBN | **892.41** |
| | | 1 Power Receptacle, 1 USB Charging, 2 Data Ports | | | EWCA-2A2D-NPSCBN | **1173.87** |
| | | 4 Power Receptacles | | | EWCA-4RNN-NPSCBN | **892.41** |
| | | 2 Power Receptacles, 2 USB Charging | | | EWCA-4ANN-NPSCBN | **1455.33** |
| 5″(127mm) | 9 5/8″(244mm) | 2 Power Receptacles, 1 Cable Bay | Painted | F, V | EWCA-2R2B-NPSPBN | **$ 935.15** |
| | | 1 Power Receptacle, 1 USB Charging, 1 Cable Bay | | | EWCA-2A2B-NPSPBN | **1216.61** |
| | | 2 Power Receptacles, 2 Data Ports | | | EWCA-2R2D-NPSPBN | **935.15** |
| | | 1 Power Receptacle, 1 USB Charging, 2 Data Ports | | | EWCA-2A2D-NPSPBN | **1216.61** |
| | | 4 Power Receptacles | | | EWCA-4RNN-NPSPBN | **935.15** |
| | | 2 Power Receptacles, 2 USB Charging | | | EWCA-4ANN-NPSPBN | **1498.07** |
| **Non-Switching - 6 Port** | | | | | | |
| 5″(127mm) | 12 5/8″(321mm) | 4 Power Receptacles, 1 Cable Bay | Anodized | J, K | EWCA-4R2B-NPSCBN | **$ 976.16** |
| | | 2 Power Receptacles, 2 USB Charging, 1 Cable Bay | | | EWCA-4A2B-NPSCBN | **1539.08** |
| | | 2 Power Receptacles, 2 Cable Bays | | | EWCA-2R4B-NPSCBN | **976.16** |
| | | 1 Power Receptacle, 1 USB Charging, 2 Cable Bays | | | EWCA-2A4B-NPSCBN | **1257.62** |
| | | 3 Power Receptacles, 3 Data Ports | | | EWCA-3R3D-NPSCBN | **976.16** |
| | | 2 Power Receptacles, 1 USB Charging, 3 Data Ports | | | EWCA-3A3D-NPSCBN | **1257.62** |
| | | 1 Power Receptacle, 2 USB Charging, 3 Data Ports | | | EWCA-3B3D-NPSCBN | **1539.08** |
| | | 6 Power Receptacles | | | EWCA-6RNN-NPSCBN | **976.16** |
| | | 3 Power Receptacles, 3 USB Charging | | | EWCA-6ANN-NPSCBN | **1820.54** |
| 5″(127mm) | 12 5/8″(321mm) | 4 Power Receptacles, 1 Cable Bay | Painted | J, K | EWCA-4R2B-NPSPBN | **$1018.90** |
| | | 2 Power Receptacles, 2 USB Charging, 1 Cable Bay | | | EWCA-4A2B-NPSPBN | **1581.82** |
| | | 2 Power Receptacles, 2 Cable Bays | | | EWCA-2R4B-NPSPBN | **1018.90** |
| | | 1 Power Receptacle, 1 USB Charging, 2 Cable Bays | | | EWCA-2A4B-NPSPBN | **1300.36** |
| | | 3 Power Receptacles, 3 Data Ports | | | EWCA-3R3D-NPSPBN | **1018.90** |
| | | 2 Power Receptacles, 1 USB Charging, 3 Data Ports | | | EWCA-3A3D-NPSPBN | **1300.36** |
| | | 1 Power Receptacle, 2 USB Charging, 3 Data Ports | | | EWCA-3B3D-NPSPBN | **1581.82** |
| | | 6 Power Receptacles | | | EWCA-6RNN-NPSPBN | **1018.90** |
| | | 3 Power Receptacles, 3 USB Charging | | | EWCA-6ANN-NPSPBN | **1863.28** |

*Reference Specification Guide for dimensions.



Class TK – SIN 711-99; Discount Group XXII
Canadian Conversion Factor: Refer to haworth.com/Canada

# workware connect

| Top Width | Top Depth | Configuration | Trim Color | Flip Top Unit Cut Out Codes* | Number | ❶ | Price |
|---|---|---|---|---|---|---|---|
| **Narrow Interface Module** | | | | | | | |
| **Non-Switching - 4 Port** | | | | | | | |
| 3 1/4"(83mm) | 9 5/8"(244mm) | 2 Power Receptacles, 1 Cable Bay | Anodized | Field Cut | EWCB-2R2B-NPSCBN | | **$ 814.79** |
| | | 1 Power Receptacle, 1 USB Charging, 1 Cable Bay | | | EWCB-2A2B-NPSCBN | | **1096.25** |
| | | 2 Power Receptacles, 2 Data Ports | | | EWCB-2R2D-NPSCBN | | **814.79** |
| | | 1 Power Receptacle, 1 USB Charging, 2 Data Ports | | | EWCB-2A2D-NPSCBN | | **1096.25** |
| | | 4 Power Receptacles | | | EWCB-4RNN-NPSCBN | | **814.79** |
| | | 2 Power Receptacles, 2 USB Charging | | | EWCB-4ANN-NPSCBN | | **1377.71** |
| 3 1/4"(83mm) | 9 5/8"(244mm) | 2 Power Receptacles, 1 Cable Bay | Painted | Field Cut | EWCB-2R2B-NPSPBN | | **$ 857.53** |
| | | 1 Power Receptacle, 1 USB Charging, 1 Cable Bay | | | EWCB-2A2B-NPSPBN | | **1138.99** |
| | | 2 Power Receptacles, 2 Data Ports | | | EWCB-2R2D-NPSPBN | | **857.53** |
| | | 1 Power Receptacle, 1 USB Charging, 2 Data Ports | | | EWCB-2A2D-NPSPBN | | **1138.99** |
| | | 4 Power Receptacles | | | EWCB-4RNN-NPSPBN | | **857.53** |
| | | 2 Power Receptacles, 2 USB Charging | | | EWCB-4ANN-NPSPBN | | **1420.45** |
| **Non-Switching - 6 Port** | | | | | | | |
| 3 1/4"(83mm) | 12 5/8"(321mm) | 4 Power Receptacles, 1 Cable Bay | Anodized | Field Cut | EWCB-4R2B-NPSCBN | | **$ 898.54** |
| | | 2 Power Receptacles, 2 USB Charging, 1 Cable Bay | | | EWCB-4A2B-NPSCBN | | **1461.46** |
| | | 2 Power Receptacles, 2 Cable Bays | | | EWCB-2R4B-NPSCBN | | **898.54** |
| | | 1 Power Receptacle, 1 USB Charging, 2 Cable Bays | | | EWCB-2A4B-NPSCBN | | **1180.00** |
| | | 3 Power Receptacles, 3 Data Ports | | | EWCB-3R3D-NPSCBN | | **898.54** |
| | | 2 Power Receptacles, 1 USB Charging, 3 Data Ports | | | EWCB-3A3D-NPSCBN | | **1180.00** |
| | | 1 Power Receptacle, 2 USB Charging, 3 Data Ports | | | EWCB-3B3D-NPSCBN | | **1461.46** |
| | | 6 Power Receptacles | | | EWCB-6RNN-NPSCBN | | **898.54** |
| | | 3 Power Receptacles, 3 USB Charging | | | EWCB-6ANN-NPSCBN | | **1742.92** |
| 3 1/4"(83mm) | 12 5/8"(321mm) | 4 Power Receptacles, 1 Cable Bay | Painted | Field Cut | EWCB-4R2B-NPSPBN | | **$ 941.28** |
| | | 2 Power Receptacles, 2 USB Charging, 1 Cable Bay | | | EWCB-4A2B-NPSPBN | | **1504.20** |
| | | 2 Power Receptacles, 2 Cable Bays | | | EWCB-2R4B-NPSPBN | | **941.28** |
| | | 1 Power Receptacle, 1 USB Charging, 2 Cable Bays | | | EWCB-2A4B-NPSPBN | | **1222.74** |
| | | 3 Power Receptacles, 3 Data Ports | | | EWCB-3R3D-NPSPBN | | **941.28** |
| | | 2 Power Receptacles, 1 USB Charging, 3 Data Ports | | | EWCB-3A3D-NPSPBN | | **1222.74** |
| | | 1 Power Receptacle, 2 USB Charging, 3 Data Ports | | | EWCB-3B3D-NPSPBN | | **1504.20** |
| | | 6 Power Receptacles | | | EWCB-6RNN-NPSPBN | | **941.28** |
| | | 3 Power Receptacles, 3 USB Charging | | | EWCB-6ANN-NPSPBN | | **1785.66** |

*Reference Specification Guide for dimensions.

This page intentionally blank

# workware connect

Interface Module — Non-Switching – 4-Port and 6-Port Narrow – Corded

**4-Port:**
(2) Power
(1) USB
(1) Data

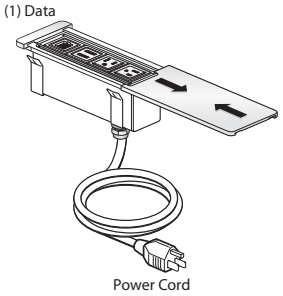


EWCG-3A1D-NPSCBNPW

**6-Port:**
(2) Power
(1) USB
(1) Data
(1) Cable Bay

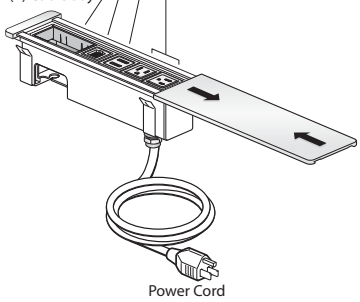


EWCG-3A2E-NPSCBNPW

**4-Port:**
(4) Power

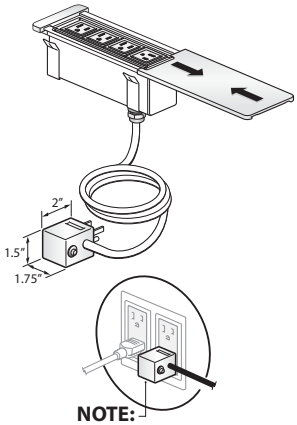


**NOTE:**
Always Fused Plug when more than 3 power outlets specified.

EWCG-4RNN-NPSCBNPW

## Features

- Includes narrow interface module with sliding door, 4 or 6 ports that can be configured with simplex outlets (NEMA-5-15R), USB charging simplex (with two USB outlets), data jack adapters or cable bay(s) that can accept up to 2 pull out data/AV cables and mounting hardware.
- Data jack adapters accommodate most varieties of field supplied data jacks or separately specified AV cables.
- Corded power module available with 15 amp - 12'(3658mm) long cord with plug (NEMA 5-15P).
- USB Charging simplex consists of 2 USB outlets. 1,000mA of charging power per USB outlet.
- Color option of clear anodized lid with black receptacles or painted lid with black receptacles.

## Specification Tips

- For use with 120 volt 60 hertz power source only.
- Requires field installation.
- Configuration and quantity of power and data ports cannot be modified in the field.
- Application may require approval of local authority having jurisdiction (AHJ); ensure compliance before placing orders and installation.
- The following workware products and accessories are specified separately:
  –Cable Base
  –Wire Management
  –Cable Retractor
  –Audio/Video Cables
  –HDMI Coupler

## To Order, Specify:

1) Product number.
2) Housing finish code (applicable to painted housing color only).

# workware connect

Interface Module — Non-Switching – 4-Port and 6-Port Narrow – Corded

| Top Width | Top Depth | Cord Length | Trim Color | Port Color | Port | Configuration | Number | Price |
|---|---|---|---|---|---|---|---|---|
| 3 1/4″ (83mm) | 9 5/8″ (244mm) | 12′ (3658mm) | Clear Anodized | Black | 4 | 1 Power Receptacle, 1 USB Charging, 1 Cable Bay | EWCG-2A2B-NPSCBNPW | **$1096.25** |
| | | | | | | 1 Power Receptacle, 3 USB Charging | EWCG-4ENN-NPSCBNPW | **1659.17** |
| | | | | | | 1 Power Receptacles, 3 Data Ports | EWCG-1R3D-NPSCBNPW | **814.79** |
| | | | | | | 2 Power Receptacles, 1 Cable Bay | EWCG-2R2B-NPSCBNPW | **814.79** |
| | | | | | | 2 Power Receptacles, 2 USB Charging | EWCG-4ANN-NPSCBNPW | **1377.71** |
| | | | | | | 2 Power Receptacles, 1 USB Charging, 1 Data Port | EWCG-3A1D-NPSCBNPW | **1096.25** |
| | | | | | | 3 Power Receptacles, 1 Data Port | EWCG-3R1D-NPSCBNPW | **814.79** |
| | | | | | | 3 Power Receptacles, 1 USB Charging | EWCG-4CNN-NPSCBNPW | **1096.25** |
| | | | | | | 4 Power Receptacles | EWCG-4RNN-NPSCBNPW | **814.79** |
| 3 1/4″ (83mm) | 12 5/8″ (321mm) | 12′ (3658mm) | Clear Anodized | Black | 6 | 1 Power Receptacle, 1 USB Charging, 2 Cable Bays | EWCG-2A4B-NPSCBNPW | **$1180.00** |
| | | | | | | 1 Power Receptacle, 1 USB Charging, 2 Data Ports, 1 Cable Bay | EWCG-2A4E-NPSCBNPW | **1180.00** |
| | | | | | | 1 Power Receptacle, 1 USB Charging, 4 Data Ports | EWCG-2A4D-NPSCBNPW | **1180.00** |
| | | | | | | 1 Power Receptacle, 2 USB Charging, 1 Data Port, 1 Cable Bay | EWCG-3E3E-NPSCBNPW | **1461.46** |
| | | | | | | 1 Power Receptacle, 2 USB Charging, 3 Data Ports | EWCG-3E3D-NPSCBNPW | **1461.46** |
| | | | | | | 1 Power Receptacle, 3 USB Charging, 1 Cable Bay | EWCG-4E2B-NPSCBNPW | **1742.92** |
| | | | | | | 1 Power Receptacle, 3 USB Charging, 2 Data Ports | EWCG-4E2D-NPSCBNPW | **1742.92** |
| | | | | | | 1 Power Receptacle, 4 USB Charging, 1 Data Port | EWCG-5E1D-NPSCBNPW | **2024.38** |
| | | | | | | 2 Power Receptacles, 2 Cable Bays | EWCG-2R4B-NPSCBNPW | **898.54** |
| | | | | | | 2 Power Receptacles, 2 Data Ports, 1 Cable Bay | EWCG-2R4E-NPSCBNPW | **898.54** |
| | | | | | | 2 Power Receptacles, 1 USB Charging, 1 Data Port, 1 Cable Bay | EWCG-3A3E-NPSCBNPW | **1180.00** |
| | | | | | | 2 Power Receptacles, 2 USB Charging, 1 Cable Bay | EWCG-4A2B-NPSCBNPW | **1461.46** |
| | | | | | | 2 Power Receptacles, 4 Data Ports | EWCG-2R4D-NPSCBNPW | **898.54** |
| | | | | | | 2 Power Receptacles, 4 USB Charging | EWCG-6BNN-NPSCBNPW | **2024.38** |
| | | | | | | 2 Power Receptacles, 3 USB Charging, 1 Data Port | EWCG-5B1D-NPSCBNPW | **1742.92** |
| | | | | | | 2 Power Receptacles, 1 USB Charging, 3 Data Ports | EWCG-3A3D-NPSCBNPW | **1180.00** |
| | | | | | | 2 Power Receptacles, 2 USB Charging, 2 Data Ports | EWCG-4A2D-NPSCBNPW | **1461.46** |
| | | | | | | 3 Power Receptacles, 1 USB Charging, 2 Data Ports | EWCG-4C2D-NPSCBNPW | **1180.00** |
| | | | | | | 3 Power Receptacles, 2 USB Charging, 1 Data Port | EWCG-5A1D-NPSCBNPW | **1461.46** |
| | | | | | | 3 Power Receptacles, 1 Data Port, 1 Cable Bay | EWCG-3R3E-NPSCBNPW | **898.54** |
| | | | | | | 3 Power Receptacles, 1 USB Charging, 1 Cable Bay | EWCG-4C2B-NPSCBNPW | **1180.00** |
| | | | | | | 3 Power Receptacles, 3 Data Ports | EWCG-3R3D-NPSCBNPW | **898.54** |
| | | | | | | 3 Power Receptacles, 3 USB Charging | EWCG-6ANN-NPSCBNPW | **1742.92** |
| | | | | | | 4 Power Receptacles, 1 USB Charging, 1 Data Port | EWCG-5C1D-NPSCBNPW | **1180.00** |
| | | | | | | 4 Power Receptacles, 1 Cable Bay | EWCG-4R2B-NPSCBNPW | **898.54** |
| | | | | | | 4 Power Receptacles, 2 Data Ports | EWCG-4R2D-NPSCBNPW | **898.54** |
| | | | | | | 4 Power Receptacles, 2 USB Charging | EWCG-6DNN-NPSCBNPW | **1461.46** |
| | | | | | | 5 Power Receptacles, 1 Data Port | EWCG-5R1D-NPSCBNPW | **898.54** |
| | | | | | | 5 Power Receptacles, 1 USB Charging | EWCG-6CNN-NPSCBNPW | **1180.00** |
| | | | | | | 6 Power Receptacles | EWCG-6RNN-NPSCBNPW | **898.54** |
| 3 1/4″ (83mm) | 9 5/8″ (244mm) | 12′ (3658mm) | Painted | Black | 4 | 1 Power Receptacle, 1 Data Port, 1 Cable Bay | EWCG-1R3E-NPSPBNPW | **$ 857.53** |
| | | | | | | 1 Power Receptacle, 1 USB Charging, 1 Cable Bay | EWCG-2A2B-NPSPBNPW | **1138.99** |
| | | | | | | 1 Power Receptacle, 3 USB Charging | EWCG-4ENN-NPSPBNPW | **1701.91** |
| | | | | | | 1 Power Receptacle, 3 Data Ports | EWCG-1R3D-NPSPBNPW | **857.53** |
| | | | | | | 2 Power Receptacles, 1 Cable Bay | EWCG-2R2B-NPSPBNPW | **857.53** |
| | | | | | | 2 Power Receptacles, 2 Data Port | EWCG-2R2D-NPSPBNPW | **857.53** |
| | | | | | | 2 Power Receptacles, 2 USB Charging | EWCG-4ANN-NPSPBNPW | **1420.45** |
| | | | | | | 2 Power Receptacles, 1 USB Charging, 1 Data Port | EWCG-3A1D-NPSPBNPW | **1138.99** |
| | | | | | | 3 Power Receptacles, 1 Data Port | EWCG-3R1D-NPSPBNPW | **857.53** |
| | | | | | | 3 Power Receptacles, 1 USB Charging | EWCG-4CNN-NPSPBNPW | **1138.99** |
| | | | | | | 4 Power Receptacles | EWCG-4RNN-NPSPBNPW | **857.53** |



Class TK – SIN 711-99; Discount Group XXII
Canadian Conversion Factor: Refer to haworth.com/Canada

# workware connect

## Interface Module — Non-Switching – 4-Port and 6-Port Narrow – Corded

| Top Width | Top Depth | Cord Length | Trim Color | Port Color | Port | Configuration | Number | Price |
|---|---|---|---|---|---|---|---|---|
| 3 1/4″ (83mm) | 12 5/8″ (321mm) | 12′ (3658mm) | Painted | Black | 6 | 1 Power Receptacle, 1 USB Charging, 2 Cable Bays | EWCG-2A4B-NPSPBNPW | **$1222.74** |
| | | | | | | 1 Power Receptacle, 1 USB Charging, 2 Data Ports, 1 Cable Bay | EWCG-2A4E-NPSPBNPW | **1222.74** |
| | | | | | | 1 Power Receptacle, 1 USB Charging, 4 Data Ports | EWCG-2A4D-NPSPBNPW | **1222.74** |
| | | | | | | 1 Power Receptacle, 2 USB Charging, 1 Data Port, 1 Cable Bay | EWCG-3E3E-NPSPBNPW | **1504.20** |
| | | | | | | 1 Power Receptacle, 2 USB Charging, 3 Data Ports | EWCG-3E3D-NPSPBNPW | **1504.20** |
| | | | | | | 1 Power Receptacle, 3 USB Charging, 1 Cable Bay | EWCG-4E2B-NPSPBNPW | **1785.66** |
| | | | | | | 1 Power Receptacle, 3 USB Charging, 2 Data Ports | EWCG-4E2D-NPSPBNPW | **1785.66** |
| | | | | | | 1 Power Receptacles, 4 USB Charging, 1 Data Port | EWCG-5E1D-NPSPBNPW | **2067.12** |
| | | | | | | 2 Power Receptacles, 2 Cable Bay | EWCG-2R4B-NPSPBNPW | **941.28** |
| | | | | | | 2 Power Receptacles, 2 Data Ports, 1 Cable Bay | EWCG-2R4E-NPSPBNPW | **941.28** |
| | | | | | | 2 Power Receptacles, 1 USB Charging, 1 Data Port, 1 Cable Bay | EWCG-3A3E-NPSPBNPW | **1222.74** |
| | | | | | | 2 Power Receptacles, 2 USB Charging, 1 Cable Bay | EWCG-4A2B-NPSPBNPW | **1504.20** |
| | | | | | | 2 Power Receptacles, 4 Data Ports | EWCG-2R4D-NPSPBNPW | **941.28** |
| | | | | | | 2 Power Receptacles, 4 USB Charging | EWCG-6BNN-NPSPBNPW | **2067.12** |
| | | | | | | 2 Power Receptacles, 3 USB Charging, 1 Data Port | EWCG-5B1D-NPSPBNPW | **1785.66** |
| | | | | | | 2 Power Receptacles, 1 USB Charging, 3 Data Ports | EWCG-3A3D-NPSPBNPW | **1222.74** |
| | | | | | | 2 Power Receptacles, 2 USB Charging, 2 Data Ports | EWCG-4A2D-NPSPBNPW | **1504.20** |
| | | | | | | 3 Power Receptacles, 1 USB Charging, 2 Data Ports | EWCG-4C2D-NPSPBNPW | **1222.74** |
| | | | | | | 3 Power Receptacles, 2 USB Charging, 1 Data Port | EWCG-5A1D-NPSPBNPW | **1504.20** |
| | | | | | | 3 Power Receptacles, 1 Data Port, 1 Cable Bay | EWCG-3R3E-NPSPBNPW | **941.28** |
| | | | | | | 3 Power Receptacles, 1 USB Charging, 1 Cable Bay | EWCG-4C2B-NPSPBNPW | **1222.74** |
| | | | | | | 3 Power Receptacles, 3 Data Ports | EWCG-3R3D-NPSPBNPW | **941.28** |
| | | | | | | 3 Power Receptacles, 3 USB Charging | EWCG-6ANN-NPSPBNPW | **1785.66** |
| | | | | | | 4 Power Receptacles, 1 USB Charging, 1 Data Port | EWCG-5C1D-NPSPBNPW | **1222.74** |
| | | | | | | 4 Power Receptacles, 1 Cable Bay | EWCG-4R2B-NPSPBNPW | **941.28** |
| | | | | | | 4 Power Receptacles, 2 Data Ports | EWCG-4R2D-NPSPBNPW | **941.28** |
| | | | | | | 4 Power Receptacles, 2 USB Charging | EWCG-6DNN-NPSPBNPW | **1504.20** |
| | | | | | | 5 Power Receptacles, 1 Data Port | EWCG-5R1D-NPSPBNPW | **941.28** |
| | | | | | | 5 Power Receptacles, 1 USB Charging | EWCG-6CNN-NPSPBNPW | **1222.74** |
| | | | | | | 6 Power Receptacles | EWCG-6RNN-NPSPBNPW | **941.28** |

# workware connect

Interface Module — Non-Switching – 4-Port and 6-Port Narrow — Spiral Corded – Height Adjustable

**4-Port:**
(2) Power
(1) USB
(1) Data

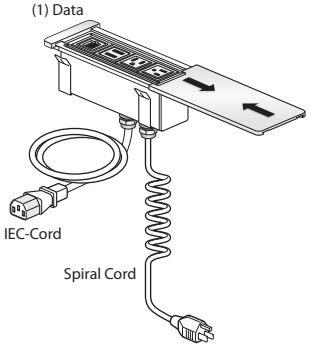


EWCG-3A1D-NPSCBNSF

**6-Port:**
(2) Power
(1) USB
(1) Data
(1) Cable Bay

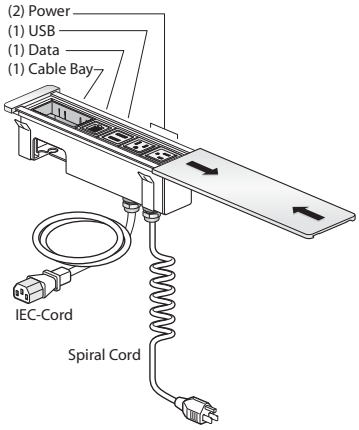


EWCG-3A3E-NPSCBNSF

**4-Port:**
(4) Power

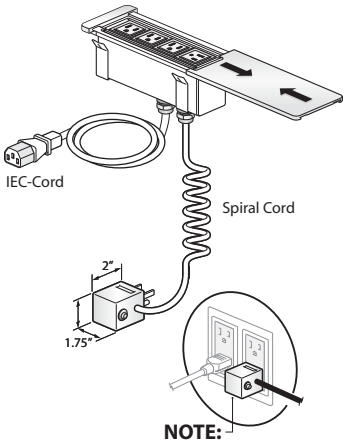


**NOTE:**
Always Fused Plug when more than 3 power outlets specified.

EWCG-4RNN-NPSCBNSF

## Features

- Includes interface module with sliding door, 4 ports that can be configured with simplex outlets (NEMA-5-15R), USB charging simplex (with two USB outlets), data jack adapters or a cable bay that can accept up to 2 pull out data/AV cables, 2'(610mm) power cord with IEC connector for motor controller and mounting hardware.
- Data jack adapters accommodate most varieties of field supplied data jacks or separately specified AV cables.
- Spiral Cord includes 15 amp plug (NEMA 5-15P) and expands from 10'(3048mm) to 12'(3658mm) when stretched.
- Auxiliary power cord includes IEC connector (IEC C13) for motor controller.
- USB Charging simplex consist of 2 USB outlets. 1,000mA of charging power per USB outlet.
- Color option of clear anodized lid with black receptacles or painted lid with black receptacles.

## Specification Tips

- Not for use with cable chain.
- For use with 120 volt 60 hertz power source only.
- Requires field installation.
- Configuration and quantity of power and data ports cannot be modified in the field.
- Application may require approval of local authority having jurisdiction (AHJ); ensure compliance before placing orders and installation.
- The following workware products and accessories are specified separately:
  –Cable Base
  –Wire Management
  –Cable Retractor
  –Audio/Video Cables
  –HDMI Coupler

## To Order, Specify:

1) Product number.
2) Trim Color for Sliding Door/End Trim:

| | |
|---|---|
| Anodized Aluminum | ZA-MT |
| Painted: | |
| Charcoal | TR-K |
| Graphite | TR-J |
| Smooth Plaster | TR-PLS |



Class TK – SIN 711-99; Discount Group XXII
Canadian Conversion Factor: Refer to haworth.com/Canada

# workware connect

Interface Module — Non-Switching – 4-Port and 6-Port Narrow — Spiral Corded – Height Adjustable

| Top Width | Top Depth | Cord Length | Housing Color | Port Color | Port | Configuration | Number | Price |
|---|---|---|---|---|---|---|---|---|
| **Corded** | | | | | | | | |
| 6 1/2″ (165mm) | 3″ (76mm) | 6′ (1829mm) | Clear Anodized | Black | 4 | 2 Power Receptacles, 1 Cable Bay | EWCG-2R2B-NPSCBNSF | **$ 946.49** |
| | | | | | | 2 Power Receptacles, 2 Data Ports | EWCG-2R2D-NPSCBNSF | **946.49** |
| | | | | | | 2 Power Receptacles, 2 USB Charging | EWCG-4ANN-NPSCBNSF | **1509.41** |
| | | | | | | 2 Power Receptacles, 1 USB Charging, 1 Data Port | EWCG-3A1D-NPSCBNSF | **1227.95** |
| | | | | | | 3 Power Receptacles, 1 Data Port | EWCG-3R1D-NPSCBNSF | **946.49** |
| | | | | | | 3 Power Receptacles, 1 USB Charging | EWCG-4CNN-NPSCBNSF | **1227.95** |
| | | | | | | 4 Power Receptacles | EWCG-4RNN-NPSCBNSF | **946.49** |
| | | | | | 6 | 2 Power Receptacles, 2 Cable Bays | EWCG-2R4B-NPSCBNSF | **1030.24** |
| | | | | | | 2 Power Receptacles, 2 Data Ports, 1 Cable Bay | EWCG-2R4E-NPSCBNSF | **1030.24** |
| | | | | | | 2 Power Receptacles, 1 USB Charging, 1 Data Port, 1 Cable Bay | EWCG-3A3E-NPSCBNSF | **1311.70** |
| | | | | | | 2 Power Receptacles, 2 USB Charging, 1 Cable Bay | EWCG-4A2B-NPSCBNSF | **1593.16** |
| | | | | | | 2 Power Receptacles, 4 Data Ports | EWCG-2R4D-NPSCBNSF | **1030.24** |
| | | | | | | 2 Power Receptacles, 4 USB Charging | EWCG-6BNN-NPSCBNSF | **2156.08** |
| | | | | | | 2 Power Receptacles, 3 USB Charging, 1 Data Port | EWCG-5B1D-NPSCBNSF | **1874.62** |
| | | | | | | 2 Power Receptacles, 1 USB Charging, 3 Data Ports | EWCG-3A3D-NPSCBNSF | **1311.70** |
| | | | | | | 2 Power Receptacles, 2 USB Charging, 2 Data Ports | EWCG-4A2D-NPSCBNSF | **1593.16** |
| | | | | | | 3 Power Receptacles, 1 USB Charging, 2 Data Ports | EWCG-4C2D-NPSCBNSF | **1311.70** |
| | | | | | | 3 Power Receptacles, 2 USB Charging, 1 Data Port | EWCG-5A1D-NPSCBNSF | **1593.16** |
| | | | | | | 3 Power Receptacles, 1 Data Port, 1 Cable Bay | EWCG-3R3E-NPSCBNSF | **1030.24** |
| | | | | | | 3 Power Receptacles, 1 USB Charging, 1 Cable Bay | EWCG-4C2B-NPSCBNSF | **1311.70** |
| | | | | | | 3 Power Receptacles, 3 Data Ports | EWCG-3R3D-NPSCBNSF | **1030.24** |
| | | | | | | 3 Power Receptacles, 3 USB Charging | EWCG-6ANN-NPSCBNSF | **1874.62** |
| | | | | | | 4 Power Receptacles, 1 USB Charging, 1 Data Port | EWCG-5C1D-NPSCBNSF | **1311.70** |
| | | | | | | 4 Power Receptacles, 1 Cable Bay | EWCG-4R2B-NPSCBNSF | **1030.24** |
| | | | | | | 4 Power Receptacles, 2 Data Ports | EWCG-4R2D-NPSCBNSF | **1030.24** |
| | | | | | | 4 Power Receptacles, 2 USB Charging | EWCG-6DNN-NPSCBNSF | **1593.16** |
| | | | | | | 5 Power Receptacles, 1 Data Port | EWCG-5R1D-NPSCBNSF | **1030.24** |
| | | | | | | 5 Power Receptacles, 1 USB Charging | EWCG-6CNN-NPSCBNSF | **1311.70** |
| | | | | | | 6 Power Receptacles | EWCG-6RNN-NPSCBNSF | **1030.24** |
| 6 1/2″ (165mm) | 3″ (76mm) | 6′ (1829mm) | Painted | Black | 4 | 2 Power Receptacles, 1 Cable Bay | EWCG-2R2B-NPSPBNSF | **$ 989.23** |
| | | | | | | 2 Power Receptacles, 2 Data Ports | EWCG-2R2D-NPSPBNSF | **989.23** |
| | | | | | | 2 Power Receptacles, 2 USB Charging | EWCG-4ANN-NPSPBNSF | **1552.15** |
| | | | | | | 2 Power Receptacles, 1 USB Charging, 1 Data Port | EWCG-3A1D-NPSPBNSF | **1270.69** |
| | | | | | | 3 Power Receptacles, 1 Data Port | EWCG-3R1D-NPSPBNSF | **989.23** |
| | | | | | | 3 Power Receptacles, 1 USB Charging | EWCG-4CNN-NPSPBNSF | **1270.69** |
| | | | | | | 4 Power Receptacles | EWCG-4RNN-NPSPBNSF | **989.23** |
| | | | | | 6 | 2 Power Receptacles, 2 Cable Bays | EWCG-2R4B-NPSPBNSF | **1072.98** |
| | | | | | | 2 Power Receptacles, 2 Data Ports, 1 Cable Bay | EWCG-2R4E-NPSPBNSF | **1072.98** |
| | | | | | | 2 Power Receptacles, 1 USB Charging, 1 Data Port, 1 Cable Bay | EWCG-3A3E-NPSPBNSF | **1354.44** |
| | | | | | | 2 Power Receptacles, 2 USB Charging, 1 Cable Bay | EWCG-4A2B-NPSPBNSF | **1635.90** |
| | | | | | | 2 Power Receptacles, 4 Data Ports | EWCG-2R4D-NPSPBNSF | **1072.98** |
| | | | | | | 2 Power Receptacles, 4 USB Charging | EWCG-6BNN-NPSPBNSF | **2198.82** |
| | | | | | | 2 Power Receptacles, 3 USB Charging, 1 Data Port | EWCG-5B1D-NPSPBNSF | **1917.36** |
| | | | | | | 2 Power Receptacles, 1 USB Charging, 3 Data Ports | EWCG-3A3D-NPSPBNSF | **1354.44** |
| | | | | | | 2 Power Receptacles, 2 USB Charging, 2 Data Ports | EWCG-4A2D-NPSPBNSF | **1635.90** |
| | | | | | | 3 Power Receptacles, 1 USB Charging, 2 Data Ports | EWCG-4C2D-NPSPBNSF | **1354.44** |
| | | | | | | 3 Power Receptacles, 2 USB Charging, 1 Data Port | EWCG-5A1D-NPSPBNSF | **1635.90** |
| | | | | | | 3 Power Receptacles, 1 Data Port, 1 Cable Bay | EWCG-3R3E-NPSPBNSF | **1072.98** |
| | | | | | | 3 Power Receptacles, 1 USB Charging, 1 Cable Bay | EWCG-4C2B-NPSPBNSF | **1354.44** |
| | | | | | | 3 Power Receptacles, 3 Data Ports | EWCG-3R3D-NPSPBNSF | **1072.98** |
| | | | | | | 3 Power Receptacles, 3 USB Charging | EWCG-6ANN-NPSPBNSF | **1917.36** |
| | | | | | | 4 Power Receptacles, 1 USB Charging, 1 Data Port | EWCG-5C1D-NPSPBNSF | **1354.44** |
| | | | | | | 4 Power Receptacles, 1 Cable Bay | EWCG-4R2B-NPSPBNSF | **1072.98** |
| | | | | | | 4 Power Receptacles, 2 Data Ports | EWCG-4R2D-NPSPBNSF | **1072.98** |
| | | | | | | 4 Power Receptacles, 2 USB Charging | EWCG-6DNN-NPSPBNSF | **1635.90** |
| | | | | | | 5 Power Receptacles, 1 Data Port | EWCG-5R1D-NPSPBNSF | **1072.98** |
| | | | | | | 5 Power Receptacles, 1 USB Charging | EWCG-6CNN-NPSPBNSF | **1354.44** |
| | | | | | | 6 Power Receptacles | EWCG-6RNN-NPSPBNSF | **1072.98** |

# workware connect

Interface Module — Non-Switching – 4-Port and 6-Port Narrow — Corded – Height Adjustable

**4-Port:**
(2) Power
(1) USB
(1) Data

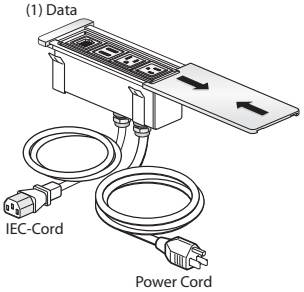


EWCG-3A1D-NPSCBNSL

**6-Port:**
(2) Power
(1) USB
(1) Data
(1) Cable Bay

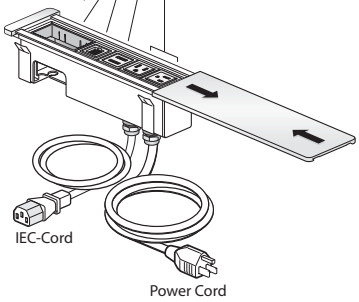


EWCG-3A3E-NPSCBNSL

**4-Port:**
(4) Power

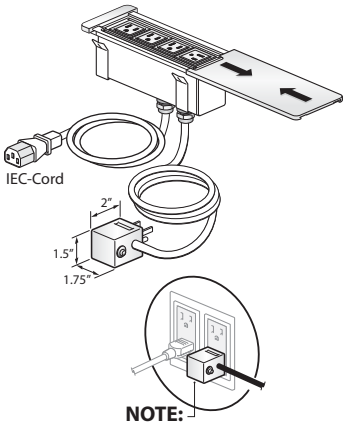


**NOTE:**
Always Fused Plug when more than 3 power outlets specified.

EWCG-4RNN-NPSCBNSL

## Features

- Includes interface module with sliding door, 4 or 6 ports that can be configured with simplex outlets (NEMA-5-15R), USB charging simplex (with two USB outlets), data jack adapters or a cable bay that can accept up to 2 pull out data/AV cables, 2'(610mm) power cord with IEC connector for motor controller and mounting hardware.
- Data jack adapters accommodate most varieties of field supplied data jacks or separately specified AV cables.
- Corded power module with 15 amp - 12'(3658mm) long cord with plug (NEMA 5-15P).
- Auxiliary power cord includes IEC connector (IEC C13) for motor controller.
- USB Charging simplex consists of 2 USB outlets. 1,000mA of charging power per USB outlet.
- Color option of clear anodized lid with black receptacles or painted lid with black receptacles.

## Specification Tips

- Designed to be used with cable chain.
- For use with 120 volt 60 hertz power source only.
- Requires field installation.
- Specify AV cables separately.
- Cable Bay requires cables less than 0.3"(7.6mm) diameter.
- Configuration and quantity of power and data ports cannot be modified in the field.
- Application may require approval of local authority having jurisdiction (AHJ); ensure compliance before placing orders and installation.
- The following workware products and accessories are specified separately:
  –Cable Base
  –Wire Management
  –Cable Retractor
  –Audio/Video Cables
  –HDMI Coupler

## To Order, Specify:

1) Product number.
2) Trim Color for Sliding Door/End Trim:

| | |
|---|---|
| Anodized Aluminum | ZA-MT |
| Painted: | |
| Charcoal | TR-K |
| Graphite | TR-J |
| Smooth Plaster | TR-PLS |



Class TK – SIN 711-99; Discount Group XXII
Canadian Conversion Factor: Refer to haworth.com/Canada

# workware connect

Interface Module — Non-Switching – 4-Port and 6-Port Narrow — Corded – Height Adjustable

| Top Width | Top Depth | Cord Length | Housing Color | Port Color | Port | Configuration | Number | Price |
|---|---|---|---|---|---|---|---|---|
| **Corded** | | | | | | | | |
| 6 1/2″ (165mm) | 3″ (76mm) | 12′ (3658mm) | Clear Anodized | Black | 4 | 2 Power Receptacles, 1 Cable Bay | EWCG-2R2B-NPSCBNSL | **$1047.33** |
| | | | | | | 2 Power Receptacles, 2 Data Ports | EWCG-2R2D-NPSCBNSL | **1047.33** |
| | | | | | | 2 Power Receptacles, 2 USB Charging | EWCG-4ANN-NPSCBNSL | **1610.25** |
| | | | | | | 2 Power Receptacles, 1 USB Charging, 1 Data Port | EWCG-3A1D-NPSCBNSL | **1328.79** |
| | | | | | | 3 Power Receptacles, 1 Data Port | EWCG-3R1D-NPSCBNSL | **1047.33** |
| | | | | | | 3 Power Receptacles, 1 USB Charging | EWCG-4CNN-NPSCBNSL | **1328.79** |
| | | | | | | 4 Power Receptacles | EWCG-4RNN-NPSCBNSL | **1047.33** |
| | | | | | 6 | 2 Power Receptacles, 2 Cable Bays | EWCG-2R4B-NPSCBNSL | **$1131.08** |
| | | | | | | 2 Power Receptacles, 2 Data Ports, 1 Cable Bay | EWCG-2R4E-NPSCBNSL | **1131.08** |
| | | | | | | 2 Power Receptacles, 1 USB Charging, 1 Data Port, 1 Cable Bay | EWCG-3A3E-NPSCBNSL | **1412.54** |
| | | | | | | 2 Power Receptacles, 2 USB Charging, 1 Cable Bay | EWCG-4A2B-NPSCBNSL | **1694.00** |
| | | | | | | 2 Power Receptacles, 4 Data Ports | EWCG-2R4D-NPSCBNSL | **1131.08** |
| | | | | | | 2 Power Receptacles, 4 USB Charging | EWCG-6BNN-NPSCBNSL | **2256.92** |
| | | | | | | 2 Power Receptacles, 3 USB Charging, 1 Data Port | EWCG-5B1D-NPSCBNSL | **1975.46** |
| | | | | | | 2 Power Receptacles, 1 USB Charging, 3 Data Ports | EWCG-3A3D-NPSCBNSL | **1412.54** |
| | | | | | | 2 Power Receptacles, 2 USB Charging, 2 Data Ports | EWCG-4A2D-NPSCBNSL | **1694.00** |
| | | | | | | 3 Power Receptacles, 1 USB Charging, 2 Data Ports | EWCG-4C2D-NPSCBNSL | **1412.54** |
| | | | | | | 3 Power Receptacles, 2 USB Charging, 1 Data Port | EWCG-5A1D-NPSCBNSL | **1694.00** |
| | | | | | | 3 Power Receptacles, 1 Data Port, 1 Cable Bay | EWCG-3R3E-NPSCBNSL | **1131.08** |
| | | | | | | 3 Power Receptacles, 1 USB Charging, 1 Cable Bay | EWCG-4C2B-NPSCBNSL | **1412.54** |
| | | | | | | 3 Power Receptacles, 3 Data Ports | EWCG-3R3D-NPSCBNSL | **1131.08** |
| | | | | | | 3 Power Receptacles, 3 USB Charging | EWCG-6ANN-NPSCBNSL | **1975.46** |
| | | | | | | 4 Power Receptacles, 1 USB Charging, 1 Data Port | EWCG-5C1D-NPSCBNSL | **1412.54** |
| | | | | | | 4 Power Receptacles, 1 Cable Bay | EWCG-4R2B-NPSCBNSL | **1131.08** |
| | | | | | | 4 Power Receptacles, 2 Data Ports | EWCG-4R2D-NPSCBNSL | **1131.08** |
| | | | | | | 4 Power Receptacles, 2 USB Charging | EWCG-6DNN-NPSCBNSL | **1694.00** |
| | | | | | | 5 Power Receptacles, 1 Data Port | EWCG-5R1D-NPSCBNSL | **1131.08** |
| | | | | | | 5 Power Receptacles, 1 USB Charging | EWCG-6CNN-NPSCBNSL | **1412.54** |
| | | | | | | 6 Power Receptacles | EWCG-6RNN-NPSCBNSL | **1131.08** |
| 6 1/2″ (165mm) | 3″ (76mm) | 12′ (3658mm) | Painted | Black | 4 | 2 Power Receptacles, 1 Cable Bay | EWCG-2R2B-NPSPBNSL | **$1090.07** |
| | | | | | | 2 Power Receptacles, 2 Data Ports | EWCG-2R2D-NPSPBNSL | **1090.07** |
| | | | | | | 2 Power Receptacles, 2 USB Charging | EWCG-4ANN-NPSPBNSL | **1652.99** |
| | | | | | | 2 Power Receptacles, 1 USB Charging, 1 Data Port | EWCG-3A1D-NPSPBNSL | **1371.53** |
| | | | | | | 3 Power Receptacles, 1 Data Port | EWCG-3R1D-NPSPBNSL | **1090.07** |
| | | | | | | 3 Power Receptacles, 1 USB Charging | EWCG-4CNN-NPSPBNSL | **1371.53** |
| | | | | | | 4 Power Receptacles | EWCG-4RNN-NPSPBNSL | **1090.07** |
| | | | | | 6 | 2 Power Receptacles, 2 Cable Bays | EWCG-2R4B-NPSPBNSL | **$1173.82** |
| | | | | | | 2 Power Receptacles, 2 Data Ports, 1 Cable Bay | EWCG-2R4E-NPSPBNSL | **1173.82** |
| | | | | | | 2 Power Receptacles, 1 USB Charging, 1 Data Port, 1 Cable Bay | EWCG-3A3E-NPSPBNSL | **1455.28** |
| | | | | | | 2 Power Receptacles, 2 USB Charging, 1 Cable Bay | EWCG-4A2B-NPSPBNSL | **1736.74** |
| | | | | | | 2 Power Receptacles, 4 Data Ports | EWCG-2R4D-NPSPBNSL | **1173.82** |
| | | | | | | 2 Power Receptacles, 4 USB Charging | EWCG-6BNN-NPSPBNSL | **2299.66** |
| | | | | | | 2 Power Receptacles, 3 USB Charging, 1 Data Port | EWCG-5B1D-NPSPBNSL | **2018.20** |
| | | | | | | 2 Power Receptacles, 1 USB Charging, 3 Data Ports | EWCG-3A3D-NPSPBNSL | **1455.28** |
| | | | | | | 2 Power Receptacles, 2 USB Charging, 2 Data Ports | EWCG-4A2D-NPSPBNSL | **1736.74** |
| | | | | | | 3 Power Receptacles, 1 USB Charging, 2 Data Ports | EWCG-4C2D-NPSPBNSL | **1455.28** |
| | | | | | | 3 Power Receptacles, 2 USB Charging, 1 Data Port | EWCG-5A1D-NPSPBNSL | **1736.74** |
| | | | | | | 3 Power Receptacles, 1 Data Port, 1 Cable Bay | EWCG-3R3E-NPSPBNSL | **1173.82** |
| | | | | | | 3 Power Receptacles, 1 USB Charging, 1 Cable Bay | EWCG-4C2B-NPSPBNSL | **1455.28** |
| | | | | | | 3 Power Receptacles, 3 Data Ports | EWCG-3R3D-NPSPBNSL | **1173.82** |
| | | | | | | 3 Power Receptacles, 3 USB Charging | EWCG-6ANN-NPSPBNSL | **2018.20** |
| | | | | | | 4 Power Receptacles, 1 USB Charging, 1 Data Port | EWCG-5C1D-NPSPBNSL | **1455.28** |
| | | | | | | 4 Power Receptacles, 1 Cable Bay | EWCG-4R2B-NPSPBNSL | **1173.82** |
| | | | | | | 4 Power Receptacles, 2 Data Ports | EWCG-4R2D-NPSPBNSL | **1173.82** |
| | | | | | | 4 Power Receptacles, 2 USB Charging | EWCG-6DNN-NPSPBNSL | **1736.74** |
| | | | | | | 5 Power Receptacles, 1 Data Port | EWCG-5R1D-NPSPBNSL | **1173.82** |
| | | | | | | 5 Power Receptacles, 1 USB Charging | EWCG-6CNN-NPSPBNSL | **1455.28** |
| | | | | | | 6 Power Receptacles | EWCG-6RNN-NPSPBNSL | **1173.82** |

This page intentionally blank

# workware connect

Interface Module — Non-Switching – 4-Port and 6-Port Narrow – Hardwire

**4-Port:**

(2) Power
(1) USB
(1) Data

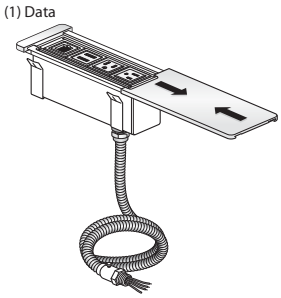

Hard Wired

EWCG-3A1D-NPSCBNCW

**6-Port:**

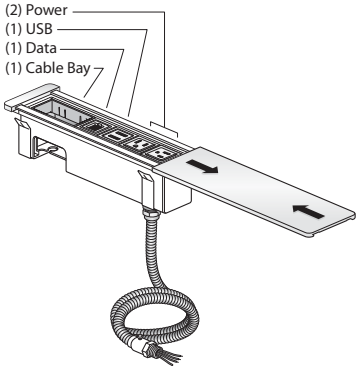


Hard Wired

EWCG-3A3E-NPSCBNCW

## Features

- Includes interface module with sliding door, 4 or 6 ports that can be configured with simplex outlets (NEMA-5-15R), USB charging simplex (with two USB outlets), data jack adapters or cable bay(s) that can accept up to 2 pull out data/AV cables and mounting hardwire.
- Data jack adapters accommodate most varieties of field supplied data jacks or separately specified AV cables.
- Hardwired power module with 12′(3658mm) long flexible metal conduit feed, 1/2″(13mm) conduit fitting and wires for hardwire connection.
- USB Charging simplex consists of 2 USB outlets. 1,000mA of charging power per USB outlet.
- Color option of clear anodized lid with black receptacles or painted lid with black receptacles.

## Specification Tips

- For use with 120 volt 60 hertz power source only.
- Requires field installation.
- Configuration and quantity of power and data ports cannot be modified in the field.
- Application may require approval of local authority having jurisdiction (AHJ); ensure compliance before placing orders and installation.
- The following workware products and accessories are specified separately:
  –Cable Base
  –Wire Management
  –Cable Retractor
  –Audio/Video Cables
  –HDMI Coupler

## To Order, Specify:

1) Product number.
2) Housing finish code (applicable to painted housing color only).

# workware connect

Interface Module — Non-Switching – 4-Port and 6-Port Narrow – Hardwire

| Top Width | Top Depth | Conduit Length | Housing Color | Port Color | Port | Configuration | Number | Price |
|---|---|---|---|---|---|---|---|---|
| 3 1/4″ (83mm) | 12 5/8″ (321mm) | 12′ (3658mm) | Clear Anodized | Black | 4 | 1 Power Receptacle, 1 USB Charging, 1 Cable Bay | EWCG-2A2B-NPSCBNCW | **$1163.75** |
| | | | | | | 1 Power Receptacle, 3 USB Charging | EWCG-4ENN-NPSCBNCW | **1726.67** |
| | | | | | | 1 Power Receptacle, 3 Data Ports | EWCG-1R3D-NPSCBNCW | **882.29** |
| | | | | | | 2 Power Receptacles, 1 Cable Bay | EWCG-2R2B-NPSCBNCW | **882.29** |
| | | | | | | 2 Power Receptacles, 2 USB Charging | EWCG-4ANN-NPSCBNCW | **1445.21** |
| | | | | | | 2 Power Receptacles, 1 USB Charging, 1 Data Port | EWCG-3A1D-NPSCBNCW | **1163.75** |
| | | | | | | 3 Power Receptacles, 1 Data Port | EWCG-3R1D-NPSCBNCW | **882.29** |
| | | | | | | 3 Power Receptacles, 1 USB Charging | EWCG-4CNN-NPSCBNCW | **1163.75** |
| | | | | | | 4 Power Receptacles | EWCG-4RNN-NPSCBNCW | **882.29** |
| 3 1/4″ (83mm) | 12 5/8″ (321mm) | 12′ (3658mm) | Clear Anodized | Black | 6 | 1 Power Receptacle, 1 USB Charging, 2 Cable Bays | EWCG-2A4B-NPSCBNCW | **$1247.50** |
| | | | | | | 1 Power Receptacle, 1 USB Charging, 2 Data Ports, 1 Cable Bay | EWCG-2A4E-NPSCBNCW | **1247.50** |
| | | | | | | 1 Power Receptacle, 1 USB Charging, 4 Data Ports | EWCG-2A4D-NPSCBNCW | **1247.50** |
| | | | | | | 1 Power Receptacle, 2 USB Charging, 1 Data Port, 1 Cable Bay | EWCG-3E3E-NPSCBNCW | **1528.96** |
| | | | | | | 1 Power Receptacle, 2 USB Charging, 3 Data Ports | EWCG-3E3D-NPSCBNCW | **1528.96** |
| | | | | | | 1 Power Receptacle, 3 USB Charging, 1 Cable Bay | EWCG-4E2B-NPSCBNCW | **1810.42** |
| | | | | | | 1 Power Receptacle, 3 USB Charging, 2 Data Ports | EWCG-4E2D-NPSCBNCW | **1810.42** |
| | | | | | | 1 Power Receptacle, 4 USB Charging, 1 Data Port | EWCG-5E1D-NPSCBNCW | **2091.88** |
| | | | | | | 2 Power Receptacles, 2 Cable Bays | EWCG-2R4B-NPSCBNCW | **966.04** |
| | | | | | | 2 Power Receptacles, 2 Data Ports, 1 Cable Bay | EWCG-2R4E-NPSCBNCW | **966.04** |
| | | | | | | 2 Power Receptacles, 1 USB Charging, 1 Data Port, 1 Cable Bay | EWCG-3A3E-NPSCBNCW | **1247.50** |
| | | | | | | 2 Power Receptacles, 2 USB Charging, 1 Cable Bay | EWCG-4A2B-NPSCBNCW | **1528.96** |
| | | | | | | 2 Power Receptacles, 4 Data Ports | EWCG-2R4D-NPSCBNCW | **966.04** |
| | | | | | | 2 Power Receptacles, 4 USB Charging | EWCG-6BNN-NPSCBNCW | **2091.88** |
| | | | | | | 2 Power Receptacles, 3 USB Charging, 1 Data Port | EWCG-5B1D-NPSCBNCW | **1810.42** |
| | | | | | | 2 Power Receptacles, 1 USB Charging, 3 Data Ports | EWCG-3A3D-NPSCBNCW | **1247.50** |
| | | | | | | 2 Power Receptacles, 2 USB Charging, 2 Data Ports | EWCG-4A2D-NPSCBNCW | **1528.96** |
| | | | | | | 3 Power Receptacles, 1 USB Charging, 2 Data Ports | EWCG-4C2D-NPSCBNCW | **1247.50** |
| | | | | | | 3 Power Receptacles, 2 USB Charging, 1 Data Port | EWCG-5A1D-NPSCBNCW | **1528.96** |
| | | | | | | 3 Power Receptacles, 1 Data Port, 1 Cable Bay | EWCG-3R3E-NPSCBNCW | **966.04** |
| | | | | | | 3 Power Receptacles,1 USB Charging, 1 Cable Bay | EWCG-4C2B-NPSCBNCW | **1247.50** |
| | | | | | | 3 Power Receptacles, 3 Data Ports | EWCG-3R3D-NPSCBNCW | **966.04** |
| | | | | | | 3 Power Receptacles, 3 USB Charging | EWCG-6ANN-NPSCBNCW | **1810.42** |
| | | | | | | 4 Power Receptacles, 1 USB Charging, 1 Data Port | EWCG-5C1D-NPSCBNCW | **1247.50** |
| | | | | | | 4 Power Receptacles, 1 Cable Bay | EWCG-4R2B-NPSCBNCW | **966.04** |
| | | | | | | 4 Power Receptacles, 2 Data Ports | EWCG-4R2D-NPSCBNCW | **966.04** |
| | | | | | | 4 Power Receptacles, 2 USB Charging | EWCG-6DNN-NPSCBNCW | **1528.96** |
| | | | | | | 5 Power Receptacles, 1 Data Port | EWCG-5R1D-NPSCBNCW | **966.04** |
| | | | | | | 5 Power Receptacles, 1 USB Charging | EWCG-6CNN-NPSCBNCW | **1247.50** |
| | | | | | | 6 Power Receptacles | EWCG-6RNN-NPSCBNCW | **966.04** |
| 3 1/4″ (83mm) | 9 5/8″ (244mm) | | Painted | Black | 4 | 1 Power Receptacle, 1 Data Port, 1 Cable Bay | EWCG-1R3E-NPSPBNCW | **$ 925.03** |
| | | | | | | 1 Power Receptacle, 1 USB Charging, 1 Cable Bay | EWCG-2A2B-NPSPBNCW | **1206.49** |
| | | | | | | 1 Power Receptacle, 3 USB Charging | EWCG-4ENN-NPSPBNCW | **1769.41** |
| | | | | | | 1 Power Receptacle, 3 Data Ports | EWCG-1R3D-NPSPBNCW | **925.03** |
| | | | | | | 2 Power Receptacles, 1 Cable Bay | EWCG-2R2B-NPSPBNCW | **925.03** |
| | | | | | | 2 Power Receptacles, 2 Data Port | EWCG-2R2D-NPSPBNCW | **925.03** |
| | | | | | | 2 Power Receptacles, 2 USB Charging | EWCG-4ANN-NPSPBNCW | **1487.95** |
| | | | | | | 2 Power Receptacles, 1 USB Charging, 1 Data Port | EWCG-3A1D-NPSPBNCW | **1206.49** |
| | | | | | | 3 Power Receptacles, 1 Data Port | EWCG-3R1D-NPSPBNCW | **925.03** |
| | | | | | | 3 Power Receptacles, 1 USB Charging | EWCG-4CNN-NPSPBNCW | **1206.49** |
| | | | | | | 4 Power Receptacles | EWCG-4RNN-NPSPBNCW | **925.03** |



Class TK – SIN 711-99; Discount Group XXII
Canadian Conversion Factor: Refer to haworth.com/Canada

# workware connect

## Interface Module — Non-Switching – 4-Port and 6-Port Narrow – Hardwire

| Top Width | Top Depth | Conduit Length | Housing Color | Port Color | Port | Configuration | Number | Price |
|---|---|---|---|---|---|---|---|---|
| 3 1/4″ (83mm) | 12 5/8″ (321mm) | | | | 6 | 1 Power Receptacle, 2 Cable Bays | EWCG-2A4B-NPSPBNCW | **$1290.24** |
| | | | | | | 1 Power Receptacle, 1 USB Charging, 2 Data Ports, 1 Cable Bay | EWCG-2A4E-NPSPBNCW | **1290.24** |
| | | | | | | 1 Power Receptacle, 1 USB Charging, 4 Data Ports | EWCG-2A4D-NPSPBNCW | **1290.24** |
| | | | | | | 1 Power Receptacle, 2 USB Charging, 1 Data Port, 1 Cable Bay | EWCG-3E3E-NPSPBNCW | **1571.70** |
| | | | | | | 1 Power Receptacle, 2 USB Charging, 3 Data Ports | EWCG-3E3D-NPSPBNCW | **1571.70** |
| | | | | | | 1 Power Receptacle, 3 USB Charging, 1 Cable Bay | EWCG-4E2B-NPSPBNCW | **1853.16** |
| | | | | | | 1 Power Receptacle, 3 USB Charging, 2 Data Ports | EWCG-4E2D-NPSPBNCW | **1853.16** |
| | | | | | | 1 Power Receptacle, 4 USB Charging, 1 Data Port | EWCG-5E1D-NPSPBNCW | **2134.62** |
| | | | | | | 2 Power Receptacles, 2 Cable Bays | EWCG-2R4B-NPSPBNCW | **1008.78** |
| | | | | | | 2 Power Receptacles, 2 Data Ports, 1 Cable Bay | EWCG-2R4E-NPSPBNCW | **1008.78** |
| | | | | | | 2 Power Receptacles, 1 USB Charging, 1 Data Port, 1 Cable Bay | EWCG-3A3E-NPSPBNCW | **1290.24** |
| | | | | | | 2 Power Receptacles, 2 USB Charging, 1 Cable Bay | EWCG-4A2B-NPSPBNCW | **1571.70** |
| | | | | | | 2 Power Receptacles, 4 Data Ports | EWCG-2R4D-NPSPBNCW | **1008.78** |
| | | | | | | 2 Power Receptacles, 4 USB Charging | EWCG-6BNN-NPSPBNCW | **2134.62** |
| | | | | | | 2 Power Receptacles, 3 USB Charging, 1 Data Port | EWCG-5B1D-NPSPBNCW | **1853.16** |
| | | | | | | 2 Power Receptacles, 1 USB Charging, 3 Data Ports | EWCG-3A3D-NPSPBNCW | **1290.24** |
| | | | | | | 2 Power Receptacles, 2 USB Charging, 2 Data Ports | EWCG-4A2D-NPSPBNCW | **1571.70** |
| | | | | | | 3 Power Receptacles, 1 USB Charging, 2 Data Ports | EWCG-4C2D-NPSPBNCW | **1290.24** |
| | | | | | | 3 Power Receptacles, 2 USB Charging, 1 Data Port | EWCG-5A1D-NPSPBNCW | **1571.70** |
| | | | | | | 3 Power Receptacles, 1 Data Port, 1 Cable Bay | EWCG-3R3E-NPSPBNCW | **1008.78** |
| | | | | | | 3 Power Receptacles, 1 USB Charging, 1 Cable Bay | EWCG-4C2B-NPSPBNCW | **1290.24** |
| | | | | | | 3 Power Receptacles, 3 Data Ports | EWCG-3R3D-NPSPBNCW | **1008.78** |
| | | | | | | 3 Power Receptacles, 3 USB Charging | EWCG-6ANN-NPSPBNCW | **1853.16** |
| | | | | | | 4 Power Receptacles, 1 USB Charging, 1 Data Port | EWCG-5C1D-NPSPBNCW | **1290.24** |
| | | | | | | 4 Power Receptacles, 1 Cable Bay | EWCG-4R2B-NPSPBNCW | **1008.78** |
| | | | | | | 4 Power Receptacles, 2 Data Ports | EWCG-4R2D-NPSPBNCW | **1008.78** |
| | | | | | | 4 Power Receptacles, 2 USB Charging | EWCG-6DNN-NPSPBNCW | **1571.70** |
| | | | | | | 5 Power Receptacles, 1 Data Port | EWCG-5R1D-NPSPBNCW | **1008.78** |
| | | | | | | 5 Power Receptacles, 1 USB Charging | EWCG-6CNN-NPSPBNCW | **1290.24** |
| | | | | | | 6 Power Receptacles | EWCG-6RNN-NPSPBNCW | **1008.78** |

This page intentionally blank

# workware connect

## Interface Modules – Switching 4-Port and 6-Port

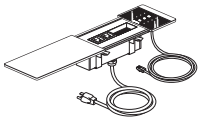

EWCA

### Narrow

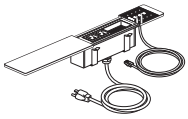

EWCB

### Processor

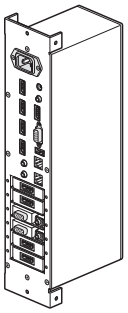

### Features

- Includes interface module with four or six ports, processor, power relay data cable, power relay cord, power relay adaptor cords, touch control data cable, 12′ HDMI cable (to connect processor to wireless module) and selected user AV cables (10′ HDMI or 12′ VGA + Audio or combination.
- Touch control is illuminated.
- Processor, all data and power cables, cable bay, receptacles and data jack adapter plates are black.
- Data jack adapters accommodate most varieties of field supplied data jacks and includes blank data covers.
- Interface module bezel is clear anodized aluminum; sliding door and end trim are available in trim colors indicated.
- Corded interface module includes 12 foot black, 15 Amp cord with plug.
- Hardwire interface module includes 6 foot flexible metal conduit feed with wires for hardwire connection.
- Interface Module overall height is 2 3/4″; will extend below the horizontal surface and extend above surface 0.35″.
- Processor size: 12″ high x 4 5/8″ deep x 2 7/8″ wide
- Depending upon system specified, processor will include laptop to video cables; 12′ VGA Video and Audio cable and/or 10′ HDMI cable.
- **Power Option/USB or Receptacle Power Combination Options:**
  –one, two, three, four or six power outlets with possible combinations:
  – (2) can be combined with (R) and (A) USB/receptacle options
  – (3) can be combined with (R), (A) and (B) USB/receptacle options
  – (4) can be combined with (R) and (A) USB/receptacle options
  – (6) can be combined with (R) and (A) USB/receptacle options
  (R) - Receptacles - 15 Amp NEMA 5-15R configuration
  (A) - Both USB charging and Receptacles - (3A) is two receptacles and one USB
  (B) - Both USB charging and Receptacles - (3B) is one receptacle and two USB
- **Data Outlets/Data Port or Data Cable Combination Options:**
  –**For use with Switching workware connect module:**
  – (2C) - one HDMI and one VGA video cables
  – (2H) - two HDMI video cables
  – (2V) - two VGA video cables
  – (4C) - two HDMI and two VGA video cables
  – (4H) - four HDMI video cables
  – (4V) - four VGA video cables
  **Example:** Refer to pages 158 and 159 for additional information.
  (2C) - 4 Port, Switching: two data/one HDMI and one VGA video cables
- Interface module ships for field installation; field modification required to horizontal top for touch control/phone access which will deface top. Reference Specification Guide for dimensions.

### Specification Tips

- Required for touch control and cable backup sharing applications only.
- Up to three switching interface module processors may be connected via HDMI cable(s) in line.
- Additional HDMI Cable(s) required for connection of Processor to Monitor(s) and processor to processor refer to application guide for calculating cable length.
- Interface Modules require field modification to horizontal top for installation; refer to Application Guide for dimensions and field-cut information.
- Requires a cable base be located directly below switching interface module to house user cables, processor, power and data cables and optional Wireless Module and optional cable retractor; refer to application guide for cable base guidelines.
- Selected user AV cables extend 48″ from Cable Bay without use of a Cable Retractor and 34″ with a Cable Retractor.

### Specification Tips, cont.

- For use with 120 volt 60 hertz power source only.
- Electrical application requires prior approval by authority having jurisdiction.
- The following workware products and accessories are specified separately:
  –Wireless Module
  –Cable Base
  –Wire Management
  –Cable Retractor
  –Power Relay Data Cable (longer than 6′)
  –HDMI Cable(s) to Monitor(s)

### To Order, Specify:

1) Product number, including:

**❶ Power Access**

**CC** Hardwire, add **$64.90** list

**PW** Corded

2) Trim Color for Sliding Door/End Trim.
- ZA-MT – Anodized Aluminum
- Painted
  TR-K – Charcoal
  TR-J – Graphite
  TR-PLS – Smooth Plaster

# workware connect

| Top Width | Top Depth | Configuration | Trim Color | Flip Top Unit Cut Out Codes* | Number | ❶ | Price |
|---|---|---|---|---|---|---|---|
| **Wide Interface Module** | | | | | | | |
| **Switching - 4 Port** | | | | | | | |
| 5″(127mm) | 9 5/8″(244mm) | 2 Power Receptacles, 1 Cable Bay, 1 HDMI, 1 VGA + Audio Data Cables | Anodized | J, K | EWCA-2R2C-CPSCBN | | **$7317.06** |
| | | 1 Power Receptacle, 1 USB Charging, 1 Cable Bay, 1 HDMI, 1 VGA + Audio Data Cables | | | EWCA-2A2C-CPSCBN | | **7598.52** |
| | | 2 Power Receptacles, 1 Cable Bay, 2 HDMI Data Cables | | | EWCA-2R2H-CPSCBN | | **7317.06** |
| | | 1 Power Receptacle, 1 USB Charging, 1 Cable Bay, 2 HDMI Data Cables | | | EWCA-2A2H-CPSCBN | | **7598.52** |
| | | 2 Power Receptacles, 1 Cable Bay, 2 VGA + Audio Data Cables | | | EWCA-2R2V-CPSCBN | | **7317.06** |
| | | 1 Power Receptacle, 1 USB Charging, 1 Cable Bay, 2 VGA + Audio Data Cables | | | EWCA-2A2V-CPSCBN | | **7598.52** |
| 5″(127mm) | 9 5/8″(244mm) | 2 Power Receptacles, 1 Cable Bay, 1 HDMI, 1 VGA + Audio Data Cables | Painted | J, K | EWCA-2R2C-CPSPBN | | **$7359.80** |
| | | 1 Power Receptacle, 1 USB Charging, 1 Cable Bay, 1 HDMI, 1 VGA + Audio Data Cables | | | EWCA-2A2C-CPSPBN | | **7641.26** |
| | | 2 Power Receptacles, 1 Cable Bay, 2 HDMI Data Cables | | | EWCA-2R2H-CPSPBN | | **7359.80** |
| | | 1 Power Receptacle, 1 USB Charging, 1 Cable Bay, 2 HDMI Data Cables | | | EWCA-2A2H-CPSPBN | | **7641.26** |
| | | 2 Power Receptacles, 1 Cable Bay, 2 VGA + Audio Data Cables | | | EWCA-2R2V-CPSPBN | | **7359.80** |
| | | 1 Power Receptacle, 1 USB Charging, 1 Cable Bay, 2 VGA + Audio Data Cables | | | EWCA-2A2V-CPSPBN | | **7641.26** |
| **Switching - 6 Port** | | | | | | | |
| 5″(127mm) | 9 5/8″(244mm) | 4 Power Receptacles, 1 Cable Bay, 1 HDMI, 1 VGA + Audio Data Cables | Anodized | Field Cut | EWCA-4R2C-CPSCBN | | **$7400.81** |
| | | 2 Power Receptacles, 2 USB Charging, 1 HDMI, 1 VGA + Audio Data Cables | | | EWCA-4A2C-CPSCBN | | **7963.73** |
| | | 1 Power Receptacle, 1 USB Charging, 2 Cable Bays, 2 HDMI, 2 VGA + Audio Data Cables | | | EWCA-2A4C-CPSCBN | | **7799.25** |
| | | 2 Power Receptacles, 2 Cable Bays, 2 HDMI, 2 VGA + Audio Data Cables | | | EWCA-2R4C-CPSCBN | | **7517.79** |
| | | 4 Power Receptacles, 1 Cable Bay, 2 HDMI Data Cables | | | EWCA-4R2H-CPSCBN | | **7400.81** |
| | | 2 Power Receptacles, 2 USB Charging, 1 Cable Bay, 2 HDMI Data Cables | | | EWCA-4A2H-CPSCBN | | **7963.73** |
| | | 1 Power Receptacle, 1 USB Charging, 1 Cable Bay, 4 HDMI Data Cables | | | EWCA-2A4H-CPSCBN | | **7799.25** |
| | | 2 Power Receptacles, 2 Cable Bays, 4 HDMI Data Cables | | | EWCA-2R4H-CPSCBN | | **7517.79** |
| | | 4 Power Receptacles, 1 Cable Bay, 2 VGA + Audio Data Cables | | | EWCA-4R2V-CPSCBN | | **7400.81** |
| | | 2 Power Receptacles, 2 USB Charging, 1 Cable Bay, 2 VGA + Audio Data Cables | | | EWCA-4A2V-CPSCBN | | **7963.73** |
| | | 1 Power Receptacle, 1 USB Charging, 2 Cable Bays, 4 VGA + Audio Data Cables | | | EWCA-2A4V-CPSCBN | | **7799.25** |
| | | 2 Power Receptacles, 2 Cable Bays, 4 VGA + Audio Data Cables | | | EWCA-2R4V-CPSCBN | | **7517.79** |
| 5″(127mm) | 9 5/8″(244mm) | 4 Power Receptacles, 1 Cable Bay, 1 HDMI, 1 VGA + Audio Data Cables | Painted Cut | Field Cut | EWCA-4R2C-CPSPBN | | **$7443.55** |
| | | 2 Power Receptacles, 2 USB Charging, 1 Cable Bay, 1 HDMI, 1 VGA + Audio Data Cables | | | EWCA-4A2C-CPSPBN | | **8006.47** |
| | | 1 Power Receptacle, 1 USB Charging, 2 Cable Bays, 2 HDMI, 2 VGA + Audio Data Cables | | | EWCA-2A4C-CPSPBN | | **7841.99** |
| | | 2 Power Receptacles, 2 Cable Bays, 2 HDMI, 2 VGA + Audio Data Cables | | | EWCA-2R4C-CPSPBN | | **7560.53** |
| | | 4 Power Receptacles, 1 Cable Bay, 2 HDMI Data Cables | | | EWCA-4R2H-CPSPBN | | **7443.55** |
| | | 2 Power Receptacles, 2 USB Charging, 1 Cable Bay, 2 HDMI Data Cables | | | EWCA-4A2H-CPSPBN | | **8006.47** |
| | | 1 Power Receptacle, 1 USB Charging, 1 Cable Bay, 4 HDMI Data Cables | | | EWCA-2A4H-CPSPBN | | **7841.99** |
| | | 2 Power Receptacles, 1 Cable Bay, 4 HDMI Data Cables | | | EWCA-2R4H-CPSPBN | | **7560.53** |
| | | 4 Power Receptacles, 1 Cable Bay, 2 VGA + Audio Data Cables | | | EWCA-4R2V-CPSPBN | | **7443.55** |
| | | 2 Power Receptacles, 2 USB Charging, 1 Cable Bay, 2 VGA + Audio Data Cables | | | EWCA-4A2V-CPSPBN | | **8006.47** |
| | | 1 Power Receptacle, 1 USB Charging, 2 Cable Bays, 4 VGA + Audio Data Cables | | | EWCA-2A4V-CPSPBN | | **7841.99** |
| | | 2 Power Receptacles, 2 Cable Bays, 4 VGA + Audio Data Cables | | | EWCA-2R4V-CPSPBN | | **7560.53** |

*Reference Specification Guide for dimensions.



Class TK – SIN 711-99; Discount Group XXII
Canadian Conversion Factor: Refer to haworth.com/Canada

# workware connect

| Top Width | Top Depth | Configuration | Trim Color | Flip Top Unit Cut Out Codes* | Number | ❶ | Price |
|---|---|---|---|---|---|---|---|
| **Narrow Interface Module** | | | | | | | |
| **Switching - 4 Port** | | | | | | | |
| 3 1/4"(83mm) | 9 5/8"(244mm) | 2 Power Receptacles, 1 Cable Bay, 1 HDMI, 1 VGA + Audio Data Cables | Anodized | J, K | EWCB-2R2C-CPSCBN | | **$7239.44** |
| | | 1 Power Receptacle, 1 USB Charging, 1 Cable Bay, 1 HDMI, 1 VGA + Audio Data Cables | | | EWCB-2A2C-CPSCBN | | **7520.90** |
| | | 2 Power Receptacles, 1 Cable Bay, 2 HDMI Data Cables | | | EWCB-2R2H-CPSCBN | | **7239.44** |
| | | 1 Power Receptacle, 1 USB Charging, 1 Cable Bay, 2 HDMI Data Cables | | | EWCB-2A2H-CPSCBN | | **7520.90** |
| | | 2 Power Receptacles, 1 Cable Bay, 2 VGA + Audio Data Cables | | | EWCB-2R2V-CPSCBN | | **7239.44** |
| | | 1 Power Receptacle, 1 USB Charging, 1 Cable Bay, 2 VGA + Audio Data Cables | | | EWCB-2A2V-CPSCBN | | **7520.90** |
| 3 1/4"(83mm) | 9 5/8"(244mm) | 2 Power Receptacles, 1 Cable Bay, 1 HDMI, 1 VGA + Audio Data Cables | Painted | J, K | EWCB-2R2C-CPSPBN | | **$7282.18** |
| | | 1 Power Receptacle, 1 USB Charging, 1 Cable Bay, 1 HDMI, 1 VGA + Audio Data Cables | | | EWCB-2A2C-CPSPBN | | **7563.64** |
| | | 2 Power Receptacles, 1 Cable Bay, 2 HDMI Data Cables | | | EWCB-2R2H-CPSPBN | | **7282.18** |
| | | 1 Power Receptacle, 1 USB Charging, 1 Cable Bay, 2 HDMI Data Cables | | | EWCB-2A2H-CPSPBN | | **7563.64** |
| | | 2 Power Receptacles, 1 Cable Bay, 2 VGA + Audio Data Cables | | | EWCB-2R2V-CPSPBN | | **7282.18** |
| | | 1 Power Receptacle, 1 USB Charging, 1 Cable Bay, 2 VGA + Audio Data Cables | | | EWCB-2A2V-CPSPBN | | **7563.64** |
| **Switching - 6 Port** | | | | | | | |
| 3 1/4"(83mm) | 9 5/8"(244mm) | 4 Power Receptacles, 1 Cable Bay, 1 HDMI, 1 VGA + Audio Data Cables | Anodized | Field Cut | EWCB-4R2C-CPSCBN | | **$7323.19** |
| | | 2 Power Receptacles, 2 USB Charging, 1 Cable Bay, 1 HDMI, 1 VGA + Audio Data Cables | | | EWCB-4A2C-CPSCBN | | **7886.11** |
| | | 1 Power Receptacle, 1 USB Charging, 2 Cable Bays, 2 HDMI, 2 VGA + Audio Data Cables | | | EWCB-2A4C-CPSCBN | | **7721.63** |
| | | 2 Power Receptacles, 2 Cable Bays, 2 HDMI, 2 VGA + Audio Data Cables | | | EWCB-2R4C-CPSCBN | | **7440.17** |
| | | 4 Power Receptacles, 1 Cable Bay, 2 HDMI Data Cables | | | EWCB-4R2H-CPSCBN | | **7323.19** |
| | | 2 Power Receptacles, 2 USB Charging, 1 Cable Bay, 2 HDMI Data Cables | | | EWCB-4A2H-CPSCBN | | **7886.11** |
| | | 1 Power Receptacle, 1 USB Charging, 1 Cable Bay, 4 HDMI Data Cables | | | EWCB-2A4H-CPSCBN | | **7721.63** |
| | | 2 Power Receptacles, 1 Cable Bay, 4 HDMI Data Cables | | | EWCB-2R4H-CPSCBN | | **7440.17** |
| | | 4 Power Receptacles, 1 Cable Bay, 2 VGA + Audio Data Cables | | | EWCB-4R2V-CPSCBN | | **7323.19** |
| | | 2 Power Receptacles, 2 USB Charging, 1 Cable Bay, 2 VGA + Audio Data Cables | | | EWCB-4A2V-CPSCBN | | **7886.11** |
| | | 1 Power Receptacle, 1 USB Charging, 2 Cable Bays, 4 VGA + Audio Data Cables | | | EWCB-2A4V-CPSCBN | | **7721.63** |
| | | 2 Power Receptacles, 2 Cable Bays, 4 VGA + Audio Data Cables | | | EWCB-2R4V-CPSCBN | | **7440.17** |
| 3 1/4"(83mm) | 9 5/8"(244mm) | 4 Power Receptacles, 1 Cable Bay, 1 HDMI, 1 VGA + Audio Data Cables | Painted | Field Cut | EWCB-4R2C-CPSPBN | | **$7365.93** |
| | | 2 Power Receptacles, 2 USB Charging, 1 Cable Bay, 1 HDMI, 1 VGA + Audio Data Cables | | | EWCB-4A2C-CPSPBN | | **7928.85** |
| | | 1 Power Receptacle, 1 USB Charging, 2 Cable Bays, 2 HDMI, 2 VGA + Audio Data Cables | | | EWCB-2A4C-CPSPBN | | **7764.37** |
| | | 2 Power Receptacles, 2 Cable Bays, 2 HDMI, 2 VGA + Audio Data Cables | | | EWCB-2R4C-CPSPBN | | **7482.91** |
| | | 4 Power Receptacles, 1 Cable Bay, 2 HDMI Data Cables | | | EWCB-4R2H-CPSPBN | | **7365.93** |
| | | 2 Power Receptacles, 2 USB Charging, 1 Cable Bay, 2 HDMI Data Cables | | | EWCB-4A2H-CPSPBN | | **7928.85** |
| | | 1 Power Receptacle, 1 USB Charging, 1 Cable Bay, 4 HDMI Data Cables | | | EWCB-2A4H-CPSPBN | | **7764.37** |
| | | 2 Power Receptacles, 2 Cable Bays, 4 HDMI Data Cables | | | EWCB-2R4H-CPSPBN | | **7482.91** |
| | | 4 Power Receptacles, 1 Cable Bay, 2 VGA + Audio Data Cables | | | EWCB-4R2V-CPSPBN | | **7365.93** |
| | | 2 Power Receptacles, 2 USB Charging, 1 Cable Bay, 2 VGA + Audio Data Cables | | | EWCB-4A2V-CPSPBN | | **7928.85** |
| | | 1 Power Receptacle, 1 USB Charging, 2 Cable Bays, 4 VGA + Audio Data Cables | | | EWCB-2A4V-CPSPBN | | **7764.37** |
| | | 2 Power Receptacles, 2 Cable Bays, 4 VGA + Audio Data Cables | | | EWCB-2R4V-CPSPBN | | **7482.91** |

*Reference Specification Guide for dimensions.

# workware Wireless

| | Width | Depth | Height | Description | Number | Price |
|---|---|---|---|---|---|---|
| **workware Wireless Base** | 5.36"(136mm) | 3.96"(101mm) | .82"(21mm) | Base operating system | EWCW-H300 | **$4056.00** |

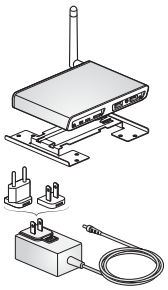

EWCW-H300

### Features
- Includes workware wireless module 2.0, Base software, antenna, HDMI port, Gigabit Ethernet port, 1-year maintenance agreement, power cord and mounting hardware.
- Compatible with all devices.
- Accommodates 10 simultaneous users.
- Allows one to four desktops to simultaneously display, including side-by-side comparisons.
- Allows remote user two-way participation and control of content.
- Room listing shown at log-in.
- The wireless module is standard in black with white trim.
- Field installation required.

### Specification Tips
- Requires separately specified power and network connection access.
- Integrates with workware processor.
- Monitor HDMI port required.
- For wireless only applications, separately specify HDMI cable.
- **Refer to Specification Guide for cable lengths and mounting guidelines.**
- **Refer to Technical Manual for software, network and monitor compatibility.**

### To Order, Specify:
1) Product number.
(No finish specification required.)

| | | | | | | |
|---|---|---|---|---|---|---|
| **workware Wireless Pro** | 5.36"(136mm) | 3.96"(101mm) | .82"(21mm) | Pro operating system | EWCW-H600 | **$7176.00** |

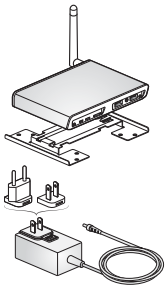

EWCW-H600

### Features
- Includes workware wireless module 2.0, Pro software, antenna, HDMI port, Gigabit Ethernet port, 1-year maintenance agreement, power cord and mounting hardware.
- Compatible with all devices.
- Accommodates an unlimited number of simultaneous users.
- Allows unlimited simultaneously displayed content.
- Allows remote user two-way participation and control of content.
- High definition remote viewing option.
- Moderator control.
- Room listing shown at log-in.
- The wireless module is standard in black with white trim.
- Field installation required.

### Specification Tips
- Requires separately specified power and network connection access.
- Integrates with workware processor.
- Monitor HDMI port required.
- For wireless only applications, separately specify HDMI cable.
- **Refer to Specification Guide for cable lengths and mounting guidelines.**
- **Refer to Technical Manual for software, network and monitor compatibility.**

### To Order, Specify:
1) Product number.
(No finish specification required.)

**workware Wireless Base and Pro Maintenance Agreement and Software Upgrade**

| Description | Number | Price |
|---|---|---|
| Base Software Maintenance Agreement Extension - 1-year | EWCM-S100 | **$ 306.80** |
| Pro Software Maintenance Agreement Extension - 1-year | EWCM-S600 | **542.88** |
| Base Software Upgrade to Pro Software | EWCU-1000 | **3120.00** |

### Features
- Maintenance Agreement Extensions:
  - –A subscription that entitles a user, on a per device basis, to get automatic upgrades to current versions of Haworth workware software, including new releases and updates.
  - –Can be purchased in multiples in order to achieve 2 and 3 year coverage.
  - –Maintenance agreements are delivered from Haworth.com.
- Software Upgrade:
  - –Downloadable software package that transforms Wireless Base to Wireless Pro.
  - –Delivered from Haworth.com.

### To Order, Specify:
1) Product number.
(No finish specification required.)



Class TK – SIN 711-99; Discount Group XXII
Canadian Conversion Factor: Refer to haworth.com/Canada

# workware view

## Table Mount With Shroud

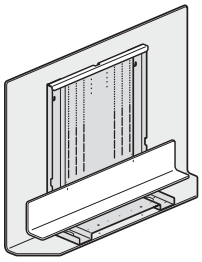

EWVT-SASD-P

### Without Shroud

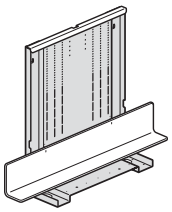

EWVT-SAND-P

| | Height | Width | Front Trim Width | Depth | Monitor Size (diagonal) | Number | Trim A | B |
|---|---|---|---|---|---|---|---|---|
| **With Shroud** | | | | | | | | |
| | 31 1/2″(800mm) | 41″(1041mm) | 33″(838mm) | 8 7/16″(214mm) | 40″/42″ | EWVT-SASD-P | **$1873.58** | **$1929.82** |
| | 34 1/16″(865mm) | 46″(1168mm) | 38″(965mm) | 8 7/16″(214mm) | 46″/47″ | EWVT-SBSD-P | **2059.18** | **2115.42** |
| | 38 1/4″(972mm) | 53″(1346mm) | 45″(1143mm) | 8 7/16″(214mm) | 52″/55″ | EWVT-SCSD-P | **2346.02** | **2402.26** |
| **Without Shroud** | | | | | | | | |
| | 27 5/16″(694mm) | 24 3/8″(619mm) | 33″(838mm) | 8 1/4″(210mm) | 40″/42″ | EWVT-SAND-P | **$ 871.77** | **$ 928.01** |
| | 29 3/8″(746mm) | 24 3/8″(619mm) | 38″(965mm) | 8 1/4″(210mm) | 46″/47″ | EWVT-SBND-P | **1012.38** | **1068.62** |
| | 33 1/16″(840mm) | 28 3/8″(721mm) | 45″(1143mm) | 8 1/4″(210mm) | 52″/55″ | EWVT-SCND-P | **1293.59** | **1349.83** |

### Features

- Includes:
  - –With Shroud: shroud, black monitor mounting bracket with front trim and attachment hardware.
  - –Without Shroud: monitor mounting bracket with front trim and attachment hardware.
- Front trim is 6″ high x 4″ deep
- Table Mount extends below horizontal top:
  - –with shroud: 1.44″
  - –without shroud: 1.25″

### Specification Tips

- For use with Planes® Tables and Reside® Tables; **refer to Specification Guide for minimum table sizes and appropriate monitor size(s).**
- Field installation required.
- LED monitors are highly recommended with 70 pounds maximum weight.
- Table Mount accommodates monitors with VESA® mounting patterns in a central location: 200mm x 200mm - 400mm x 400mm.
- For Table Mount without Shroud; recommend placing against a wall as monitor mounting bracket is exposed.
- **Separately specified if applicable:**
  - –Wire management
  - –Camera Mount Shelf for Table Mount (-T)

### To Order, Specify:

1) Product number.
2) Trim color for shroud and front trim.

## Table Mount With Shroud Dual Monitor

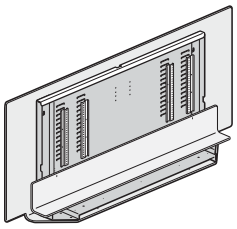

EWVT-DCSD-P

### Without Shroud

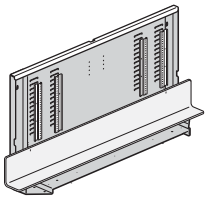

EWVT-DCND-P

| | | | | | | | | |
|---|---|---|---|---|---|---|---|---|
| **With Shroud** | | | | | | | | |
| | 27 1/2″(699mm) | 64″(1626mm) | 52 1/2″(1334mm) | 8 7/16″(214mm) | 32″x2 | EWVT-DCSD-P | **$2589.00** | **$2645.24** |
| **Without Shroud** | | | | | | | | |
| | 24 3/4″(629mm) | 46″(1168mm) | 52 1/2″(1334mm) | 8 1/4″(210mm) | 32″x2 | EWVT-DCND-P | **$1552.32** | **$1608.56** |

### Features

- Includes:
  - –With Shroud: shroud, black monitor mounting bracket with front trim and attachment hardware.
  - –Without Shroud: black monitor mounting bracket with front trim and attachment hardware.
- Front trim is 6″ high x 4″ deep X 52 1/2″ Width
- Table Mount extends below horizontal top:
  - –with shroud: 1.44″

### Specification Tips

- For use with Planes® Tables and Reside® Tables; **refer to Specification Guide for minimum table sizes and appropriate monitor size(s).**
- Field installation required.
- LED monitors are highly recommended with 35 pounds maximum weight per monitor.
- Table Mount accommodates monitors with VESA® mounting patterns in a central location: 100mm x 100mm - 300mm x 300mm.
- For Table Mount without Shroud; recommend placing against a wall as monitor mounting bracket is exposed.
- **Separately specified if applicable:**
  - –Wire management
  - –Camera Mount Shelf for Table Mount (-T)

### To Order, Specify:

1) Product number.
2) Trim color for shroud and front trim.

# workware view

## Enclose® Walls – Proud Mount – Single Monitor With Shroud

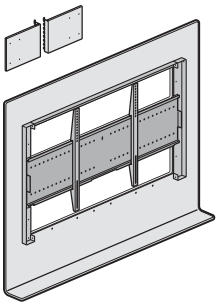

EWVE-SASS-PP

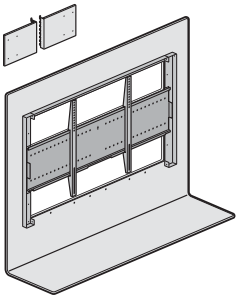

EWVE-SASD-PP

### Without Shroud

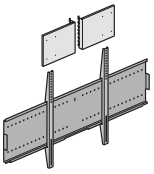

EWVE-SNNN-PN

| Height | Width | Monitor Size (diagonal) | Number | Price | Trim A | Trim B |
|---|---|---|---|---|---|---|
| **Single Monitor with Shroud – 4″ deep radius shelf** | | | | | | |
| 35 1/2″(902mm) | 46″(1168mm) | 46″/47″ | EWVE-SASS-PP | | **$1912.67** | **$1968.91** |
| 40″(1016mm) | 54″(1372mm) | 52″/55″ | EWVE-SBSS-PP | | **2111.77** | **2168.01** |
| 47 1/2″(1207mm) | 66″(1676mm) | 65″/70″ | EWVE-SCSS-PP | | **2846.08** | **2902.32** |
| **Single Monitor with Shroud – 12″ deep radius edge shelf** | | | | | | |
| 35 1/2″(902mm) | 46″(1168mm) | 46″/47″ | EWVE-SASD-PP | | **$2006.03** | **$2062.27** |
| 40″(1016mm) | 54″(1372mm) | 52″/55″ | EWVE-SBSD-PP | | **2205.13** | **2261.37** |
| 47 1/2″(1207mm) | 66″(1676mm) | 65″/70″ | EWVE-SCSD-PP | | **2939.44** | **2995.68** |
| **Single Monitor without Shroud** | | | | | | |
| 20 1/2″(521mm) | 36″(914mm) | 46″/70″ | EWVE-SNNN-PN | **$264.35** | | |

### Features

- Includes:
  - –With Shroud: shroud, black Enclose wall mounting bracket, spacers, black monitor mounting bracket, 1/2″ light blocks and monitor attachment hardware.
  - –Without Shroud: black Enclose wall mounting brackets, black monitor mounting bracket and monitor attachment hardware.
- Shroud option includes an integrated 12″ deep radius edge shelf.
- Enclose Wall mounting option is standard proud mount and not available for use with full height glass walls.
- Field installed on Enclose Walls; field modification required; wall tile will be defaced.

### Specification Tips

- **Refer to Specification Guide for additional details including critical space requirements for installation.**
- For use with Enclose Walls (not glass).
- **Mounting Bracket/Shroud must be properly anchored to an Enclose Wall; anchors are not provided and must be field supplied based upon type of Enclose wall surface (wood, drywall, metal, laminate, fabric). Refer to Specification Guide for requirements.**
- LED monitors are highly recommended with 100 pounds maximum weight per monitor.
- Accommodates monitors with VESA® mounting patterns in central location: 200mm x 200mm - 600mm x 400mm.
- **Separately specified if applicable:**
  - –Wire Management
  - –Camera Mount Shelf for Enclose Wall mount with shroud (-W)

### To Order, Specify:

1) Product number.
2) Trim color for Shroud.

## Enclose® Walls – Proud Mount – Dual Monitor With Shroud

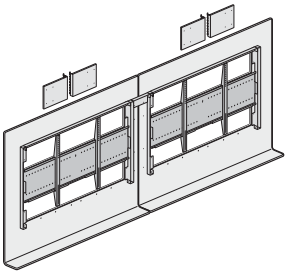

EWVE-DASS-P

| Height | Width | Monitor Size (diagonal) | Number | Price | Trim A | Trim B |
|---|---|---|---|---|---|---|
| **4″ deep radius shelf** | | | | | | |
| 35 1/2″(902mm) | 46″(1168mm) | 46″/47″ | EWVE-DASS-PP | | **$3875.33** | **$3931.57** |
| 40″(1016mm) | 54″(1372mm) | 52″/55″ | EWVE-DBSS-PP | | **4484.78** | **4541.02** |
| 47 1/2″(1207mm) | 66″(1676mm) | 65″/70″ | EWVE-DCSS-PP | | **5342.16** | **5398.40** |

### Features

- Include shroud, black Enclose wall mounting brackets, spacers, black monitor mounting brackets, 1/2″ light blocks and monitor attachment hardware.
- Shroud includes an integrated 4″ deep radius edge shelf.
- Enclose Wall mounting option is standard proud mount and not available for use with full height glass walls.
- Field installed on Enclose Walls; field modification required; wall tile will be defaced.

### Specification Tips

- **Refer to Specification Guide for additional details including critical space requirements for installation.**
- For use with Enclose Walls (not glass).
- **Mounting Bracket/Shroud must be properly anchored to an Enclose Wall; anchors are not provided and must be field supplied based upon type of Enclose wall surface (wood, drywall, metal, laminate, fabric). Refer to Specification Guide for requirements.**
- LED monitors are highly recommended with 100 pounds maximum weight per monitor.
- Accommodates monitors with VESA® mounting patterns in central location: 200mm x 200mm - 600mm x 400mm.
- **Separately specified if applicable:**
  - –Wire Management
  - –Camera Mount Shelf for Enclose Wall mount with shroud (-W)

### To Order, Specify:

1) Product number.
2) Trim color for Shroud.



Class TK – SIN 711-99; Discount Group XXII
Canadian Conversion Factor: Refer to haworth.com/Canada

# workware view

## Structural Walls – Proud Mount – Single Monitor With Shroud

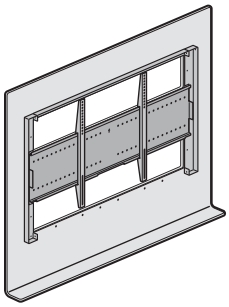

EWVD-SASS-PP

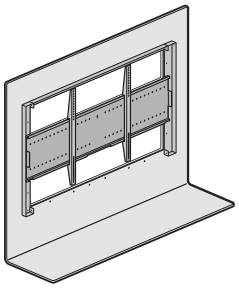

EWVD-SASD-PP

### Without Shroud

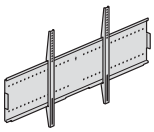

EWVD-SNNN-PN

| Height | Width | Monitor Size (diagonal) | Number | Price | Trim A | Trim B |
|---|---|---|---|---|---|---|
| **Single Monitor with Shroud – 4″ deep radius edge shelf** | | | | | | |
| 35 1/2″(902mm) | 46″(1168mm) | 46″/47″ | EWVD-SASS-PP | | **$1638.31** | **$1694.55** |
| 40″(1016mm) | 54″(1372mm) | 52″/55″ | EWVD-SBSS-PP | | **1893.03** | **1949.27** |
| 47 1/2″(1207mm) | 66″(1676mm) | 65″/70″ | EWVD-SCSS-PP | | **2771.72** | **2827.96** |
| **Single Monitor with Shroud – 12″ deep radius edge shelf** | | | | | | |
| 35 1/2″(902mm) | 46″(1168mm) | 46″/47″ | EWVD-SASD-PP | | **$1731.67** | **$1787.91** |
| 40″(1016mm) | 54″(1372mm) | 52″/55″ | EWVD-SBSD-PP | | **1986.39** | **2042.63** |
| 47 1/2″(1207mm) | 66″(1676mm) | 65″/70″ | EWVD-SCSD-PP | | **2865.08** | **2921.32** |
| **Single Monitor without Shroud** | | | | | | |
| 20 1/2″(521mm) | 36″(914mm) | 46″/70″ | EWVD-SNNN-PN | **$163.12** | | |

### Features

- Includes:
  - –With Shroud: shroud, black structural wall mounting bracket, spacers, black monitor mounting bracket, 1/2″ light blocks and monitor attachment hardware.
  - –Without Shroud: black structural wall mounting brackets, black monitor mounting bracket and monitor attachment hardware.
- Shroud option includes an integrated 12″ deep radius edge shelf.
- Field installation and structural wall modifications required; structural wall will be defaced.

### Specification Tips

- **Refer to Specification Guide for additional details including critical space requirements for installation.**
- For use with structural walls.
- **Mounting Bracket/Shroud must be properly anchored to a structural wall; anchors are not provided and must be field supplied.**
- **Wall must be properly blocked with 3/4″ plywood or 2″ x 4″ wood studs behind the drywall. Refer to Specification Guide for requirements.**
- LED monitors are highly recommended with 100 pounds maximum weight per monitor.
- Accommodates monitors with VESA® mounting patterns in central location: 200mm x 200mm - 600mm x 400mm.
- **Separately specified if applicable:**
  - –Wire Management
  - –Camera Mount Shelf for structural wall mount with Shroud (-W)
- Not designed for use with Wall Track.

### To Order, Specify:

1) Product number.
2) Trim color for Shroud.

## Structural Walls – Proud Mount – Dual Monitor With Shroud

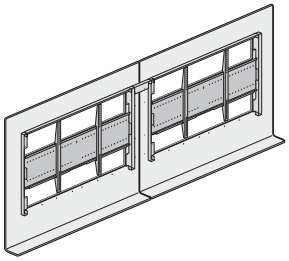

EWVD-DASS-PP

| Height | Width | Monitor Size (diagonal) | Number | Price | Trim A | Trim B |
|---|---|---|---|---|---|---|
| **4″ deep radius shelf** | | | | | | |
| 35 1/2″(902mm) | 46″(1168mm) | 46″/47″ | EWVD-DASS-PP | | **$3426.62** | **$3482.86** |
| 40″(1016mm) | 54″(1372mm) | 52″/55″ | EWVD-DBSS-PP | | **4136.07** | **4192.31** |
| 47 1/2″(1207mm) | 66″(1676mm) | 65″/70″ | EWVD-DCSS-PP | | **4993.45** | **5049.69** |

### Features

- Includes shroud, black structural wall mounting brackets, spacers, black monitor mounting brackets, 1/2″ light blocks and monitor attachment hardware.
- Shroud option includes an integrated 4″ deep radius edge shelf.
- Field installation and structural wall modifications required; structural wall will be defaced.

### Specification Tips

- **Refer to Specification Guide for additional details including critical space requirements for installation.**
- For use with structural walls.
- **Mounting Bracket/Shroud must be properly anchored to a structural wall; anchors are not provided and must be field supplied.**
- **Wall must be properly blocked with 3/4″ plywood or 2″ x 4″ wood studs behind the drywall. Refer to Specification Guide for requirements.**
- LED monitors are highly recommended with 100 pounds maximum weight per monitor.
- Accommodates monitors with VESA® mounting patterns in central location: 200mm x 200mm - 600mm x 400mm.
- **Separately specified if applicable:**
  - –Wire Management
  - –Camera Mount Shelf for structural wall mount with Shroud (-W)
- Not designed for use with Wall Track.

### To Order, Specify:

1) Product number.
2) Trim color for Shroud.

# workware Accessories

## Power Relay Data Cable

EWCX-0701-PR

| Length | Description | Number | Price |
|---|---|---|---|
| 7′(2134mm) | Male/male | EWCX-0701-PR | **$22.50** |
| 14′(4267mm) | Male/male | EWCX-1401-PR | **37.12** |
| 25′(7620mm) | Male/male | EWCX-2501-PR | **43.87** |
| 50′(15240mm) | Male/male | EWCX-5001-PR | **58.49** |

### Features

- Includes one power relay data cable.
- Allows link from processor to power relay.

### To Order, Specify:

1) Product number.
(No finish specification required.)

## HDMI or VGA Cable

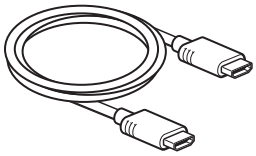

EWCX-H

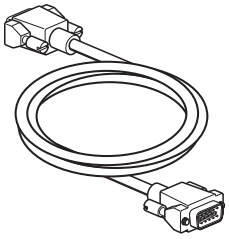

EWCX-5001-V

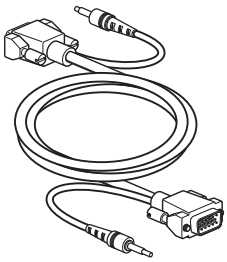

EWCX-V

| | | | |
|---|---|---|---|
| 3′(914mm) | HDMI – male/male | EWCX-0301-H | **$ 86.62** |
| 6′(1829mm) | HDMI – male/male | EWCX-0601-H | **115.49** |
| 10′(3048mm) | HDMI – male/male | EWCX-1001-H | **125.11** |
| 15′(4572mm) | HDMI – male/male | EWCX-1501-H | **181.11** |
| 25′(7620mm) | HDMI – male/male | EWCX-2501-H | **293.10** |
| 50′(15240mm) | HDMI – male/male | EWCX-5001-H | **406.08** |
| 5′(1524mm) | VGA + Audio – male/male | EWCX-0501-V | **$123.73** |
| 10′(3048mm) | VGA + Audio – male/male | EWCX-1001-V | **145.11** |
| 15′(4572mm) | VGA + Audio – male/male | EWCX-1501-V | **199.00** |
| 25′(7620mm) | VGA + Audio – male/male | EWCX-2501-V | **253.10** |
| 50′(15240mm) | VGA – male/male | EWCX-5001-V | **361.08** |

### Features

- Includes one black HDMI or VGA/VGA + Audio cable.
- For use with:
  - –HDMI transmits digital video and audio signals.
  - –VGA + Audio transmits analog video and audio signals with the exception of the 50′ cable.

### Specification Tips

- Provides communication between components: i.e. laptop, processor, monitor, etc.
  - –**Daisy chaining of cables not recommended.**
  - –The audio cable extension of the user VGA + Audio cable extends 20″ from the connector head. Separately specify audio only cables if audio extension is not long enough for application.
- 50′ VGA cable not available with audio.

### To Order, Specify:

1) Product number.
(No finish specification required.)

## Audio Cable – 3.5mm

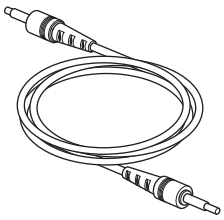

EWCX-A3

| | | | |
|---|---|---|---|
| 3′(914mm) | Male/male | EWCX-0301-A3 | **$ 63.12** |
| 6′(1829mm) | Male/male | EWCX-0601-A3 | **84.49** |
| 12′(3658mm) | Male/male | EWCX-1201-A3 | **120.48** |
| 25′(7620mm) | Male/male | EWCX-2501-A3 | **171.11** |

### Features

- Includes one black audio cable with 3.5mm heads.
- For use with VGA cables if audio is needed.

### To Order, Specify:

1) Product number.
(No finish specification required.)



Class TK – GSA: Open Market
Canadian Conversion Factor: Refer to haworth.com/Canada

# Electrical Components

Cables

## Cables

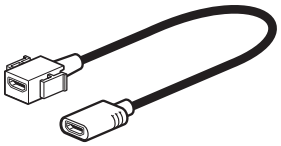

EUDX-H000-B

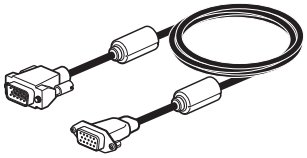

EUDX-V000-B

EUDX-3000-B

| Length | Description | Color | Number | Price |
|---|---|---|---|---|
| **HDMI Coupler** | | | | |
| N/A | HDMI | Black | EUDX-H000-B | **$136.55** |
| N/A | HDMI | White | EUDX-H000-W | **136.55** |
| **VGA Cable** | | | | |
| 120″(3048mm) | VGA | Black | EUDX-V000-B | **$163.86** |
| | VGA | White | EUDX-V000-W | **163.86** |
| **Audio Cable — 3.5mm** | | | | |
| 120″(3048mm) | VGA | Black | EUDX-3000-B | **$ 38.24** |
| | VGA | White | EUDX-3000-W | **38.24** |

### Features

- Includes one black HDMI Coupler, one VGA cable or one 3.5mm mini audio cable.
- Installs in an open data port in one of the following products:
  - –Flip Top Unit
  - –Double Sided Flip Top Unit
  - –Quick Connect Power
  - –Workware Interface Module
  - –Flush Mount Module
  - –Enhanced Power Module

### Specification Tips

- Provides communication between components: i.e. laptop, processor, monitor, etc.
- HDMI transmits digital video signals.
- VGA transmits analog video signals without audio.

### To Order, Specify:

1) Product number.
   (No finish specification required.)

## Retrofit USB Charging Cable

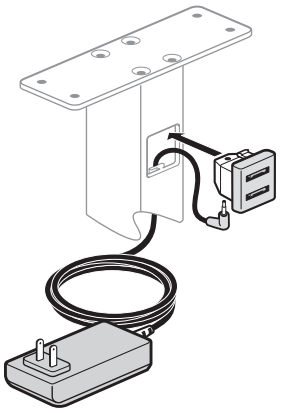

EUDX-3000-B

| | | | | |
|---|---|---|---|---|
| 72″(1829mm) | | Black | EUDX-U000-B | **$98.32** |
| | | White | EUDX-U000-W | **98.32** |

### Features

- Includes one USB charging simplex (with two USB outlets) with 72″(1829mm) cord and power supply.
- Installs in an open data port in one of the following products:
  - –Flip Top Unit
  - –Double Sided Flip Top Unit
  - –Quick Connect Power
  - –Workware Interface Module
  - –Flush Mount Module
  - –Enhanced Power Module
- USB Charging Port consists of 2 USB outlets. 1,000mA of charging power per USB outlet.

### To Order, Specify:

1) Product number.
   (No finish specification required.)

# workware Accessories

| | Number | Price |
|---|---|---|
| **Power Relay Adapter Cord** | EWCX-0101-PA | **$173.12** |

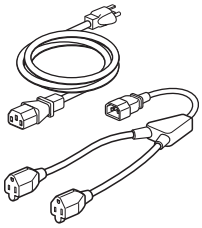

EWCX-0101-PA

GSA: Open Market

### Features

- Includes:
  - –6′(1829mm) NEMA 5-15P – IEC C13 power cord
  - –2′(610mm) NEMA 5-15R – IEC C14 (2X) splitter power cord
- For use with power relay (-PS) when monitors do not have detachable power cords.

### To Order, Specify:

1) Product number.
   (No finish specification required.)

## Camera Mount Shelf

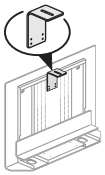

EWVC-0506-T

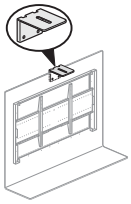

EWVC-0506-W

SIN 711-99;
Discount Group XXII

| Width | Depth | Description | Number | Price Grade A | Price Grade B |
|---|---|---|---|---|---|
| 5″(127mm) | 6″(152mm) | For use with Table Mount | EWVC-0506-T | **$67.50** | **$123.74** |
| 5″(127mm) | 6″(152mm) | For use with Wall Mount | EWVC-0506-W | **67.50** | **123.74** |

### Features

- Includes one steel camera mount shelf and attachment hardware.
- Camera mount shelf is for use with:
  - (T) Table Mount with or without Shroud
  - (W) Enclose wall mount with Shroud and structural wall mount with Shroud

### Specification Tips

- **For use with workware view: attaches to shroud for Enclose Wall and structural wall mounting.**
- Camera mount shelf for Table Mount has 2″ height adjustment range to accommodate different monitor sizes.
- Camera mount shelf for walls is not adjustable.

### To Order, Specify:

1) Product number.
2) Trim color.



Class TK
Canadian Conversion Factor: Refer to haworth.com/Canada

# workware Accessories

## Cable Base

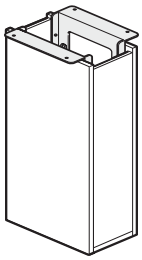

TA01-0814

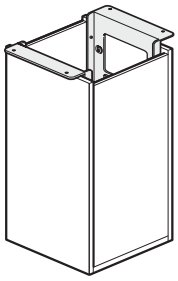

TA01-1414

| Height | Depth | Width | Number | Laminate Price | Wood Grade A | Wood Grade B |
|---|---|---|---|---|---|---|
| **Laminate** | | | | | | |
| 28″(711mm) | 8″(203mm) | 14″(356mm) | TA01-0814-L | **$633.43** | | |
| | 14″(356mm) | 14″(356mm) | TA01-1414-L | **674.73** | | |
| **Wood** | | | | | | |
| 28″(711mm) | 8″(203mm) | 14″(356mm) | TA01-0814-W | | **$1070.70** | **$1102.61** |
| | 14″(356mm) | 14″(356mm) | TA01-1414-W | | **1143.50** | **1191.93** |

### Features

- Includes 28″(711mm) high cable base and mounting hardware.
- Laminate with 1mm edgeband or wood veneer with 1mm wood edgeband.
- Provides internal cable management with removable panels for access.
- Standard on green core.
- Bracket is standard in charcoal.
- Includes 1″(25mm) adjustable glides.
- Ships assembled.

### Specification Tips

- **Refer to Specification Guide for use guidelines.**
- **Cable base not recommended for use with 30″(762mm) deep tables, half round tables, polygon tables or Y-leg tables or 36″(914mm) deep tables with (M) or (Q) flip top unit cutout options.**
- A minimum of 17″(432mm) of knee space is recommended for table occupants:
  - –Specify 8″(203mm) x 14″(356mm) cable base for 36″(914mm) deep tables and separately specify a Processor Bracket to install Processor outside of Cable Base.
  - –Specify 14″(356mm) x 14″(356mm) cable base for 42″(1067mm) deep and deeper tables.
- Required for touch control and cable backup sharing applications.
- Additional cable bases may be required:
  - –One and two-piece table tops – one cable base.
  - –Three-piece table tops – two cable bases.

### Specification Tips, cont.

- A cable base is required to be located directly below switching interface module to house user cables, processor, power and data cables and optional Wireless Module and optional cable retractor; refer to application guide for cable base guidelines.
- Cable base cord access:
  - –1 1/2″(38mm) at top
  - –adjustable side panels allow 1″(25mm) gap at bottom edges
  - –The cutout should be 3″(76mm) x 8″(203mm) for the 8″(203mm) x 14″(356mm) cable base and 8″(203mm) x 8″(203mm) for the 14″(356mm) x 14″(356mm) cable base.
- For Cable Base Laminate and Wood finishes; refer to Tables Price List/Planes Table Finishes.

### To Order, Specify:

1) Product number.
2) Laminate surface color or wood finish color.
3) Edge trim color for laminate.

## Cable Base Cable Retractor

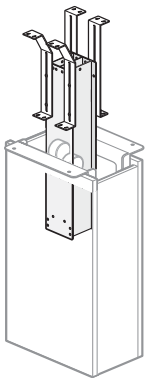

EWCX-BRWM-2A

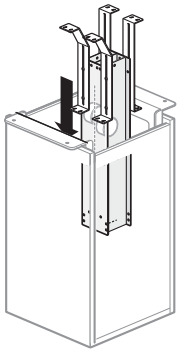

EWCX-BRWM-4A

| Description | Width | Length | Number | Price |
|---|---|---|---|---|
| 2 Cable Chute | 4 1/2″(114mm) | 22″(559mm) | EWCX-BRWM-2A | **$341.78** |
| 4 Cable Chute | 7 1/2″(191mm) | 22″(559mm) | EWCX-BRWM-4A | **530.51** |

### Features

- Includes chute, weights and mounting hardware.
- Installs on the underside of table top.
- For use with separately ordered Cable Base and workware Interface Module or Flip Top Unit to retract cables from table top or a Flip Top Unit.
- Provides 34″(864mm) of cable travel.
- Provides vertical cable management within the Planes Cable Base.
- Isolates user cables from other data and power connection cables within the Cable Base.

### Specification Tips

- Order Cable Base, cables, and workware interface module separately.
- One cable per chute.
- Requires 1/4″(6mm) diameter cables or less.
- workware processor can be mounted to the side of the chute when used with 14 x 14 cable base.
- workware processor must be mounted externally to an 8″ x 14″ cable base when used with the Cable Retractor. Use processor mounting bracket EWCX-BRPR.
- See Specification Guide for application related details.

### To Order, Specify:

1) Product number.
   (No finish specification required.)

# workware Accessories

| | Height | Depth | Width | Number | Price |
|---|---|---|---|---|---|
| **Cable Column** | 28″(711mm) | 2″(51mm) | 4 1/2″(114mm) | TA01-0217 | **$223.24** |

TA01-0217

### Features

- Cable Column offers a wire management option for conference tables when the Cable Base Option cannot be used.
- Includes one Cable Column with mounting hardware for attaching to underside of table.
- Hardware for attaching Cable Column to floor is field supplied.
- Ships unassembled.

### Specification Tips

- For vertical routing of cables and cords. Will not accept workware processor or wireless module.
- Cable Column attaches to underside of table, extends to the floor where it is also attached.
- Cable Column is not load bearing and does not replace table leg(s).
- Cable Column can be installed anywhere under a conference table unless it would interfere with table legs, Horizontal Wire Manager, workware Interface Module or Flip Top Power/Data Units.
- The Cable Column can be used with the Horizontal Wire Manager for cable management.
- Not for use with Switching Interface Module.

### To Order, Specify:

1) Product number.
2) Trim color.

# workware Accessories

## Processor Bracket

| Number | Price |
|---|---|
| EWCX-BRPR | **$51.18** |

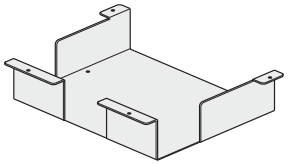

EWCX-BRPR

Class TK – SIN 711-99;
Discount Group XXII

### Features
- Includes bracket and hardware.
- Standard in black.
- Mounts underneath a worksurface or table to hold the processor.

### Specification Tips
- For use when the cable base or cable column is less than the 14 x 14.
- Refer to the Specification Guide for additional details.

### To Order, Specify:

1) Product number.
(No finish specification required.)

## Wire Manager – Horizontal

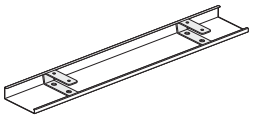

EUAW

Class PT
GSA: Open Market

| Length | Clips | Number | Price |
|---|---|---|---|
| 48″(1219mm) | 2 | EUAW-0048-NH | **$135.00** |
| 72″(1829mm) | 3 | EUAW-0072-NH | **202.52** |
| 96″(2438mm) | 3 | EUAW-0096-NH | **270.05** |
| 120″(3048mm) | 4 | EUAW-00C0-NH | **337.46** |

### Features
- Includes one wire manager and attachment clips.
- Standard in light platinum plastic.
- Field cuttable.

### Specification Tips
- For use with conference tables for wire management.
- Recommended for use to route cables to Cable Base.
- Not recommended for use on Y-leg tables.

### To Order, Specify:

1) Product number.
(No finish specification required.)

# workware view

## Mobile Monitor Easel – No Interface Module

| | Height | Depth | Width | Monitor Size (diagonal) | Number | Trim A | Trim B |
|---|---|---|---|---|---|---|---|
| **Seated Height** | | | | | | | |
| 65 1/2″(1664mm) | 24″(610mm) | 54″(1372mm) | 52″/55″ | | EWVM-SB4P-N | **$4994.45** | **$5050.69** |
| 73″(1854mm) | 24″(610mm) | 64 3/8″(1635mm) | 65″ | | EWVM-SC4P-N | **5669.37** | **5725.61** |
| **Standing Height** | | | | | | | |
| 73 3/4″(1873mm) | 24″(610mm) | 54″(1372mm) | 52″/55″ | | EWVM-SB7P-N | **$5444.40** | **$5500.64** |

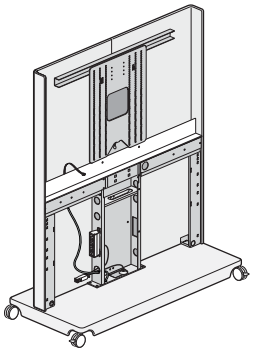

EWVM-SB4P-N
Seated Ht. (52″-55″ Monitor)

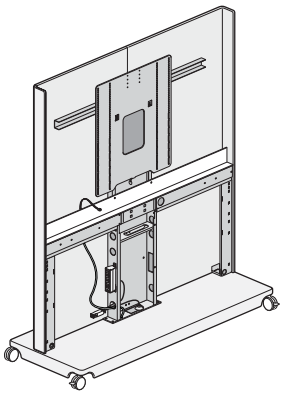

EWVM-SC4P-N
Seated Ht. (52″-55″ Monitor)

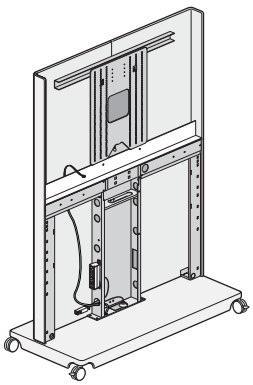

EWVM-SB7P-N
Standing Ht. (65″ Monitor)

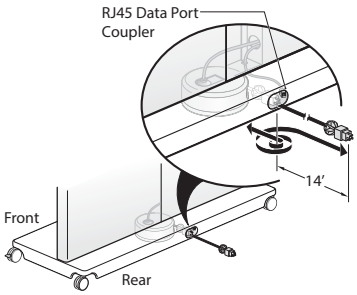


### Features

- Includes frame, base, monitor mounting bracket and hardware kit, casters, 14′ retracting power cord with circuit breaker, internal 4-port power tap, one RJ45 data port coupler and internal 5′ RJ45 patch cord.
- Internal 4-port power tap accessible from interior of easel for powering monitor, Wireless Module or other accessories.
- Frame available in trim colors only.
- Requires separately specified Mobile Monitor Easel Tile in paint, laminate, wood or fabric.
- Easel base serves as a counter-weight.
- Casters (two locking/two non-locking) are available with: Light platinum or fog hub with graphite tread, or black hub with black tread.
- Easel is used as a monitor support and can be used as a space divider.
- Ships unassembled.

**Note: Packaged Mobile Monitor Easel ships flat on a skid, note chart for size and weight. Pre-site evaluation should take into consideration doorway widths, elevator sizes, and unloading method.**

| | Monitor Size | Weight w/Skid | Box Size w/Skid W x L x H |
|---|---|---|---|
| Seated Height | 52″/55″ | 320 lbs. | 53″ x 72″ x 17″ |
| | 65″ | 364 lbs. | 53″ x 72″ x 17″ |
| Standing Height | 52″/55″ | 341 lbs. | 53″ x 72″ x 17″ |

### Specification Tips

- **Refer to Specification Guide for additional details.**
- If Wireless Module is not specified, then separately specified cabling is needed.
- Cannot be retrofitted to add external power or data outlets.
- For external power or data outlet access, order the Non-Switching Mobile Monitor Easel with separately specified workware interface module.
- LED monitors are highly recommended.
- Maximum weight per monitor size: 52″/55″ 70 pounds and 65″ 100 pounds maximum.
- Accommodates one monitor with VESA standard mounting patterns in central location: 52″/55″ - 200mm, 300mm and 400mm hole pattern combinations; 65″ - 400mm and 600mm hole pattern combinations.
- RJ45 data port coupler for connection of Wireless Module to building's LAN cable.
- **Separately specified if applicable:**
  –Wireless Module and VGA + Audio cable
  –Camera Mount Shelf (-T)
  –Field supplied cabling
  –workware accessories

### To Order, Specify:

1) Product number.
2) Trim color.
3) Caster trim color.



Class TK – SIN 711-99; Discount Group XXII
Canadian Conversion Factor: Refer to haworth.com/Canada

# workware view

## Mobile Monitor Easel – For Non-Switching Interface Module

| | Height | Depth | Width | Monitor Size (diagonal) | Number | Grade A | Grade B |
|---|---|---|---|---|---|---|---|
| **Seated Height** | | | | | | | |
| 65 1/2″(1664mm) | 24″(610mm) | 54″(1372mm) | 52″/55″ | | EWVM-SB4P-P | **$6456.77** | **$6513.01** |
| 73″(1854mm) | 24″(610mm) | 64 3/8″(1635mm) | 65″ | | EWVM-SC4P-P | **7131.69** | **7187.93** |
| **Standing Height** | | | | | | | |
| 73 3/4″(1873mm) | 24″(610mm) | 54″(1372mm) | 52″/55″ | | EWVM-SB7P-P | **$6906.72** | **$6962.96** |

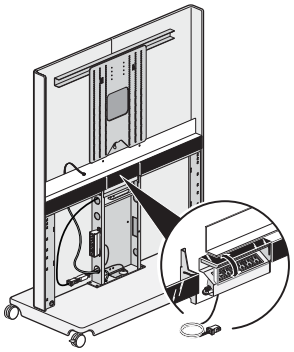

EWVM-SB4P-P
Seated Ht. (52″-55″ Monitor)

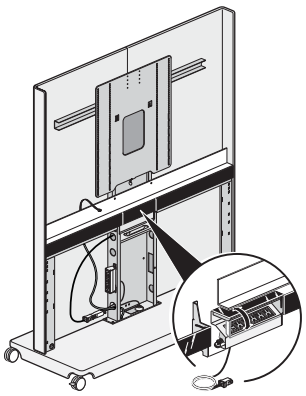

EWVM-SC4P-P
Seated Ht. (52″-55″ Monitor)

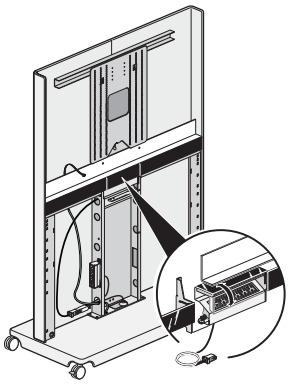

SPLT-2866
Standing Ht. (65″ Monitor)

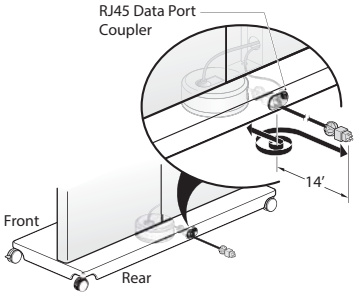


### Features

- Includes frame, base, monitor mounting bracket and hardware kit, casters, 14′ retracting power cord with circuit breaker, internal 4-port power tap, one RJ45 data port coupler, internal 5′ RJ45 patch cord, black mid-height utility fascia with door (touch control not included) and mounting bracket for 6-port interface module (separately specified).
- Mid-height utility fascia door allows access to separately specified 6-Port workware connect Non-Switching Interface Module for Mobile Monitor Easel.
- Requires separately specified Mobile Monitor Easel Tile in paint, laminate, wood or fabric.
- Internal 4-port power tap accessible from interior of easel for powering monitor, Wireless Module or other accessories.
- Frame available in trim colors only.
- Easel base serves as a counter-weight.
- Casters (two locking/two non-locking) are available with: Light platinum or fog hub with graphite tread, or black hub with black tread.
- Easel is used as a monitor support and can be used as a space divider.
- Ships unassembled.

**Note: Packaged Mobile Monitor Easel ships flat on a skid, note chart for size and weight. Pre-site evaluation should take into consideration doorway widths, elevator sizes, and unloading method.**

| | Monitor Size | Weight w/Skid | Box Size w/Skid W x L x H |
|---|---|---|---|
| Seated Height | 52″/55″ | 320 lbs. | 53″ x 72″ x 17″ |
| | 65″ | 364 lbs. | 53″ x 72″ x 17″ |
| Standing Height | 52″/55″ | 341 lbs. | 53″ x 72″ x 17″ |

### Specification Tips

- **Refer to Specification Guide for additional details.**
- Requires separately specified Non-Switching 6-port Interface Module.
- Interface Module can be concealed behind door.
- Allows exterior access for powering accessories such as laptop or mobile device.
- LED monitors are highly recommended.
- Maximum weight per monitor size: 52″/55″ 70 pounds and 65″ 100 pounds maximum.
- Accommodates one monitor with VESA standard mounting patterns in central location: 52″/55″ - 200mm, 300mm and 400mm hole pattern combinations; 65″ - 400mm and 600mm hole pattern combinations.
- RJ45 data port coupler for connection of Wireless Module to building's LAN cable.
- **Separately specified if applicable:**
  - workware connect Interface Module - Non Switching for Mobile Monitor Easel Non-Switching
  - HDMI and VGA + Audio cables
  - HDMI Coupler
  - Wireless Module
  - Camera Mount Shelf (-T)
  - workware accessories

### To Order, Specify:

1) Product number.
2) Trim color.
3) Caster trim color.

# workware view

## Tile for Mobile Monitor Easel – No Interface Module

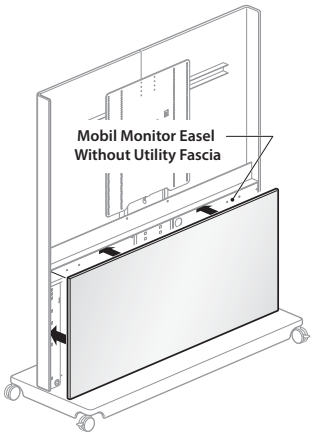


EWVX-PB4P-NN
Easel Tile without Shelf (Seated Ht. 65″ Monitor)

Double-Cut Veneer
(Wood Group A)

Natural Veneer
(Wood Group B)

### Features

- Includes one tile with attachment bracket:
  - –Steel painted surface.
  - –Laminate surface with 1mm edgeband.
  - –Wood surface with natural or double-cut veneer.
  - –Fabric surface tackable with standard core.

### Specification Tips

- Tile required for Mobile Monitor Easel - No Interface Module only.
- Remove tile to access easel interior.
- Low gloss for double-cut wood veneer tiles.
- Standard gloss finish for natural wood tiles.

### To Order, Specify:

1) Product number.
2) Surface color.
3) For Laminate, choose edgeband trim color.

| | Height | Width | Number | Trim A | Trim B |
|---|---|---|---|---|---|
| **For Easel Without Interface Module** | | | | | |
| **Paint** | | | | | |
| 52″ - 55″ Monitor - Seated Height | 28″(711mm) | 52″(1321mm) | EWVX-PB4P-NN | **$237.61** | **$349.21** |
| 65″ Monitor - Seated Height | 28″(711mm) | 63″(1600mm) | EWVX-PC4P-NN | **240.76** | **361.36** |
| 52″ - 55″ Monitor - Standing Height | 36″(914mm) | 52″(1321mm) | EWVX-PB7P-NN | **273.61** | **394.17** |
| **Laminate** | | | | | |
| 52″ - 55″ Monitor - Seated Height | 28″(711mm) | 52″(1321mm) | EWVX-PB4L-NN | **$230.60** | **$238.75** |
| 65″ Monitor - Seated Height | 28″(711mm) | 63″(1600mm) | EWVX-PC4L-NN | **240.72** | **249.99** |
| 52″ - 55″ Monitor - Standing Height | 36″(914mm) | 52″(1321mm) | EWVX-PB7L-NN | **266.60** | **277.55** |
| **Wood** | | | | | |
| 52″ - 55″ Monitor - Seated Height | 28″(711mm) | 52″(1321mm) | EWVX-PB4W-NN | **$345.32** | **$385.35** |
| 65″ Monitor - Seated Height | 28″(711mm) | 63″(1600mm) | EWVX-PC4W-NN | **356.01** | **398.29** |
| 52″ - 55″ Monitor - Standing Height | 36″(914mm) | 52″(1321mm) | EWVX-PB7W-NN | **385.80** | **433.91** |

| | Height | Width | Number | Fabric Grade A | Fabric Grade B | Fabric Grade C | Fabric Grade E | Fabric Grade F | Fabric Grade G |
|---|---|---|---|---|---|---|---|---|---|
| **Fabric** | | | | | | | | | |
| 52″ - 55″ Monitor - Seated Height | 28″(711mm) | 52″(1321mm) | EWVX-PB4F-NN | **$142.87** | **$164.32** | **$188.41** | **$240.20** | **$275.66** | **$297.11** |
| 65″ Monitor - Seated Height | 28″(711mm) | 63″(1600mm) | EWVX-PC4F-NN | **143.99** | **165.62** | **189.88** | **242.09** | **277.83** | **299.44** |
| 52″ - 55″ Monitor - Standing Height | 36″(914mm) | 52″(1321mm) | EWVX-PB7F-NN | **174.39** | **200.48** | **230.01** | **293.16** | **336.54** | **362.63** |



Class TK – SIN 711-99; Discount Group XXII
Canadian Conversion Factor: Refer to haworth.com/Canada

# workware view

## Tile for Mobile Monitor Easel – Switching or Non-Switching Interface Module

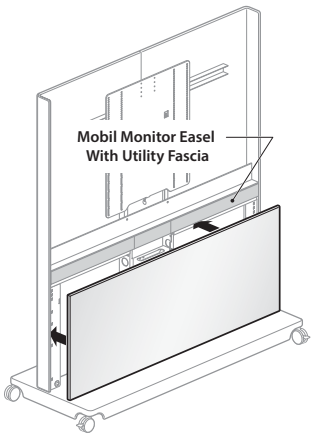


EWVX-PB4P-PN
Easel Tile without Shelf (Seated Ht. 65″ Monitor)

Double-Cut Veneer
(Wood Group A)

Natural Veneer
(Wood Group B)

### Features

- Includes one tile with attachment bracket:
  - –Steel painted surface.
  - –Laminate surface with 1mm edgeband.
  - –Wood surface with natural or double-cut veneer.
  - –Fabric surface tackable with standard core.

### Specification Tips

- Tile required for Mobile Monitor Easel Non-Switching Interface Module only.
- Remove tile to access easel interior.
- Low gloss for double-cut wood veneer tiles.
- Standard gloss finish for natural wood tiles.

### To Order, Specify:

1) Product number.
2) Surface color.
3) For Laminate, choose edgeband trim color.

| | Height | Width | Number | Trim A | Trim B |
|---|---|---|---|---|---|
| **For Switching or Non-Switching Interface Module** | | | | | |
| **Paint** | | | | | |
| 52″ - 55″ Monitor - Seated Height | 25″(635mm) | 52″(1321mm) | EWVX-PB4P-PN | **$224.11** | **$332.35** |
| 65″ Monitor - Seated Height | 25″(635mm) | 63″(1600mm) | EWVX-PC4P-PN | **227.26** | **344.50** |
| 52″ - 55″ Monitor - Standing Height | 33″(838mm) | 52″(1321mm) | EWVX-PB7P-PN | **260.11** | **377.31** |
| **Laminate** | | | | | |
| 52″ - 55″ Monitor - Seated Height | 25″(635mm) | 52″(1321mm) | EWVX-PB4L-PN | **$217.10** | **$224.20** |
| 65″ Monitor - Seated Height | 25″(635mm) | 63″(1600mm) | EWVX-PC4L-PN | **227.22** | **235.44** |
| 52″ - 55″ Monitor - Standing Height | 33″(838mm) | 52″(1321mm) | EWVX-PB7L-PN | **253.10** | **263.00** |
| **Wood** | | | | | |
| 52″ - 55″ Monitor - Seated Height | 25″(635mm) | 52″(1321mm) | EWVX-PB4W-PN | **$330.14** | **$367.14** |
| 65″ Monitor - Seated Height | 25″(635mm) | 63″(1600mm) | EWVX-PC4W-PN | **340.83** | **380.08** |
| 52″ - 55″ Monitor - Standing Height | 33″(838mm) | 52″(1321mm) | EWVX-PB7W-PN | **370.62** | **415.70** |

| | Height | Width | Number | Fabric Grade A | Fabric Grade B | Fabric Grade C | Fabric Grade E | Fabric Grade F | Fabric Grade G |
|---|---|---|---|---|---|---|---|---|---|
| **Fabric** | | | | | | | | | |
| 52″ - 55″ Monitor - Seated Height | 25″(635mm) | 52″(1321mm) | EWVX-PB4F-PN | **$131.05** | **$150.76** | **$172.81** | **$220.34** | **$252.83** | **$272.54** |
| 65″ Monitor - Seated Height | 25″(635mm) | 63″(1600mm) | EWVX-PC4F-PN | **132.17** | **152.06** | **174.28** | **222.23** | **255.00** | **274.87** |
| 52″ - 55″ Monitor - Standing Height | 33″(838mm) | 52″(1321mm) | EWVX-PB7F-PN | **162.57** | **186.92** | **214.41** | **273.30** | **313.71** | **338.06** |

# workware view

## Shelf Tile for Mobile Monitor Easel – No Interface Module

| | Height | Width | Number | Trim A | Trim B |
|---|---|---|---|---|---|
| **For Easel Without Interface Module** | | | | | |
| 52″ - 55″ Monitor - Seated Height | 28″(711mm) | 52″(1321mm) | EWVX-SB4P-N2 | **$1915.89** | **$2027.49** |
| 65″ Monitor - Seated Height | 28″(711mm) | 63″(1600mm) | EWVX-SC4P-N2 | **1919.04** | **2039.64** |
| 52″ - 55″ Monitor - Standing Height | 36″(914mm) | 52″(1321mm) | EWVX-SB7P-N1 | **1112.75** | **1233.31** |

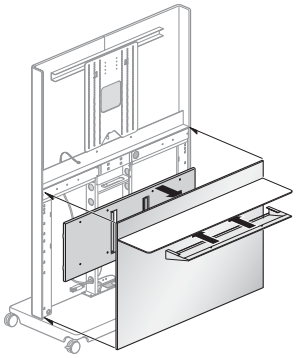

EWVX-SB7P-N1
Easel Tile with (1) Shelf
(Standing Ht. 52″-55″ Monitor)

### Features

- Includes one steel tile with one or two fixed shelves, a support backer, shelving bracket and shelving bracket cover.
  - –Seated height includes two fixed shelves.
  - –Standing height includes one fixed shelf.
- Shelf depth 11″.

### To Order, Specify:

1) Product number.
2) Trim color.

### Specification Tips

- Tile required for Mobile Monitor No Interface Module only.
- Remove tile to access easel interior.
- Not available with laminate, fabric or wood tile.
- Maximum load 35 pounds per shelf.
- Refer to Specification Guide for additional details.

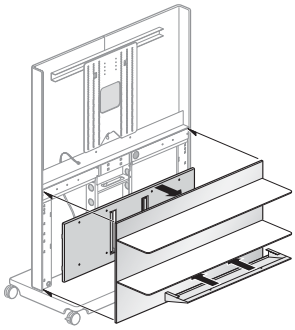

EWVX-SB4P-N2
Easel Tile with (2) Shelves
(Seated Ht. 52″-55″ Monitor)

**52″-55″ Monitor – Seated Height**

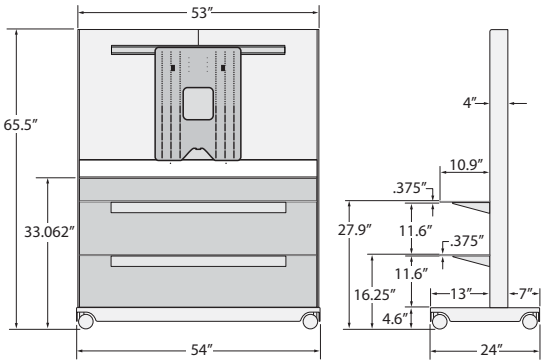


**52″-55″ Monitor – Standing Height**

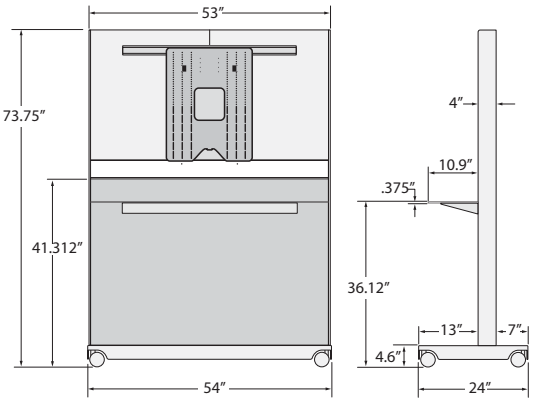


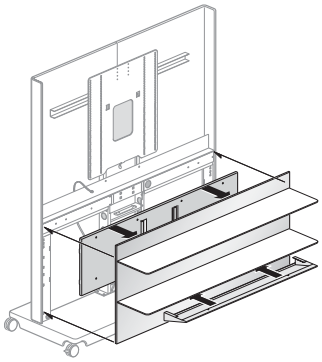

EWVX-SC4P-N2
Easel Tile with (2) Shelves
(Seated Ht. 65″ Monitor)

**65″ Monitor – Seated Height**

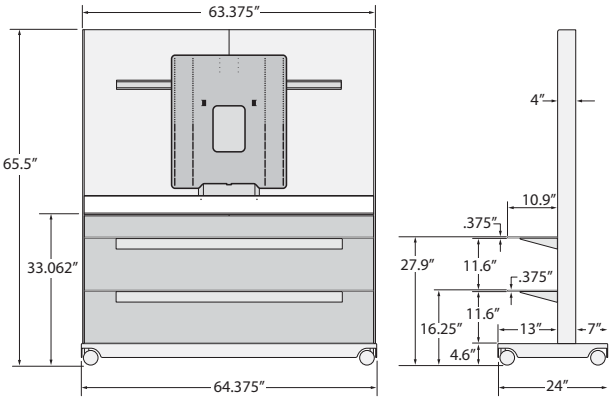




Class TK – SIN 711-99; Discount Group XXII
Canadian Conversion Factor: Refer to haworth.com/Canada

# workware view

## Shelf Tile for Mobile Monitor Easel – For Switching or Non-Switching Interface Module

| | Height | Width | Number | Trim A | Trim B |
|---|---|---|---|---|---|
| **For Non-Switching - Interface Module** | | | | | |
| 52″ - 55″ Monitor - Seated Height | 25″(635mm) | 52″(1321mm) | EWVX-SB4P-P2 | **$1902.39** | **$2010.63** |
| 65″ Monitor - Seated Height | 25″(635mm) | 63″(1600mm) | EWVX-SC4P-P2 | **1905.54** | **2022.78** |
| 52″ - 55″ Monitor - Standing Height | 33″(838mm) | 52″(1321mm) | EWVX-SB7P-P1 | **1099.25** | **1216.45** |

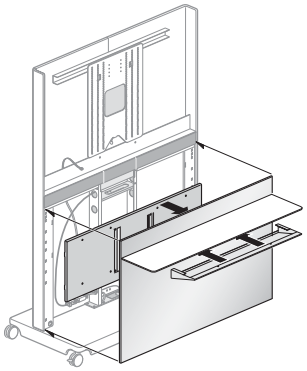

EWVX-SB7P-P1
Easel Tile with (1) Shelf
(Standing Ht. 52″-55″ Monitor)

### Features

- Includes one steel tile with one or two fixed shelves, a support backer, shelving bracket and shelving bracket cover.
  - –Seated height includes two fixed shelves.
  - –Standing height includes one fixed shelf.
- Shelf depth 11″.

### Specification Tips

- Tile required for Mobile Monitor Easel Non-Switching Interface Module only.
- Remove tile to access easel interior.
- Not available with laminate, fabric or wood tile.
- Maximum load 35 pounds per shelf.
- Refer to Specification Guide for additional details.

### To Order, Specify:

1) Product number.
2) Trim color.

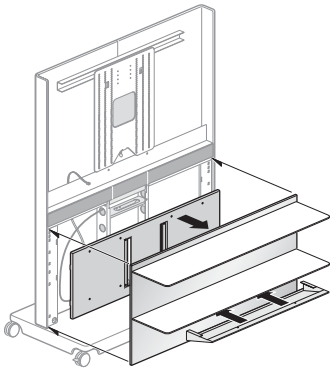

EWVX-SB4P-P2
Easel Tile with (2) Shelves
(Seated Ht. 52-55″ Monitor)

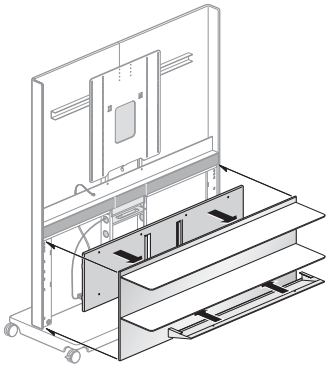

EWVX-SC4P-P2
Easel Tile with (2) Shelves
(Seated Ht. 65″ Monitor)

**52″-55″ Monitor – Seated Height**

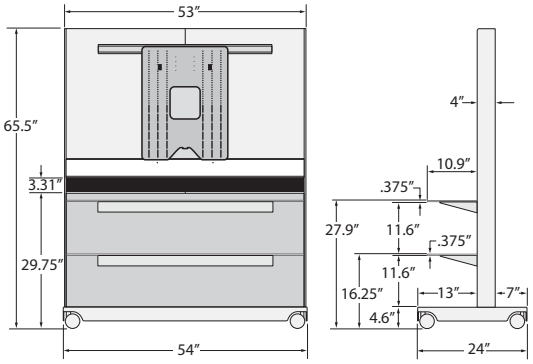


**52″-55″ Monitor – Standing Height**

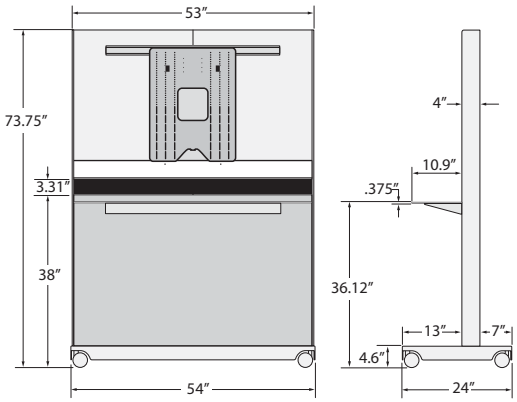


**65″ Monitor – Seated Height**

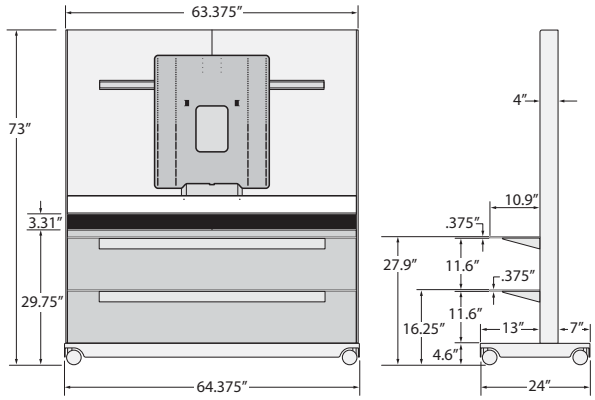

# workware connect

## Interface Module for Easel – Non-Switching 6-Port

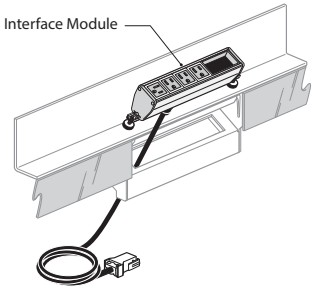


EWCE-NNNNBNPW

| | Top Width | Top Depth | Configuration | Number | Price |
|---|---|---|---|---|---|
| | 9 5/8"(244mm) | 2 1/2"(64mm) | 4 Power receptacles, 1 Cable Bay | EWCE-4R2B-NNNNBNPW | **$ 797.70** |
| | | | 4 Power receptacles, 2 Data ports | EWCE-4R2D-NNNNBNPW | **797.70** |
| | | | 2 Power receptacles, 2 USB charging, 1 Cable Bay | EWCE-4A2B-NNNNBNPW | **1360.62** |
| | | | 2 Power receptacles, 2 USB charging, 2 Data ports | EWCE-4A2D-NNNNBNPW | **1360.62** |
| | | | 6 Power receptacles | EWCE-6RNN-NNNNBNPW | **797.70** |
| | | | 3 Power receptacles, 3 USB charging | EWCE-6ANN-NNNNBNPW | **1360.62** |

### Features

- Includes black interface module with 6 ports.
  - –Receptacle port is NEMA 5-15R
  - –USB ports are for charging only and share a 2000 mA supply.
  - –Data jack adapters accommodate most varieties of field supplied data jacks and includes blank data covers.
  - –Cable Bay is a recessed space for two cables.
- Interface module power cord connects to the Mobile Monitor Easel retractable cord.

### Specification Tips

- Required for Mobile Monitor Easel Non-Switching Interface Module only.
- **Data jacks are field supplied.**
- **Refer to Specification Guide for additional details.**
- **For use with 120 volt 60 hertz power source only.**
- **Electrical application requires prior approval by authority having jurisdiction.**
- The following workware products and accessories are specified separately:
  - –HDMI or VGA + audio user cables
  - –HDMI Coupler
  - –Wireless Module and VGA + audio cable

### To Order, Specify:

1) Product number.
   (No finish specification required.)

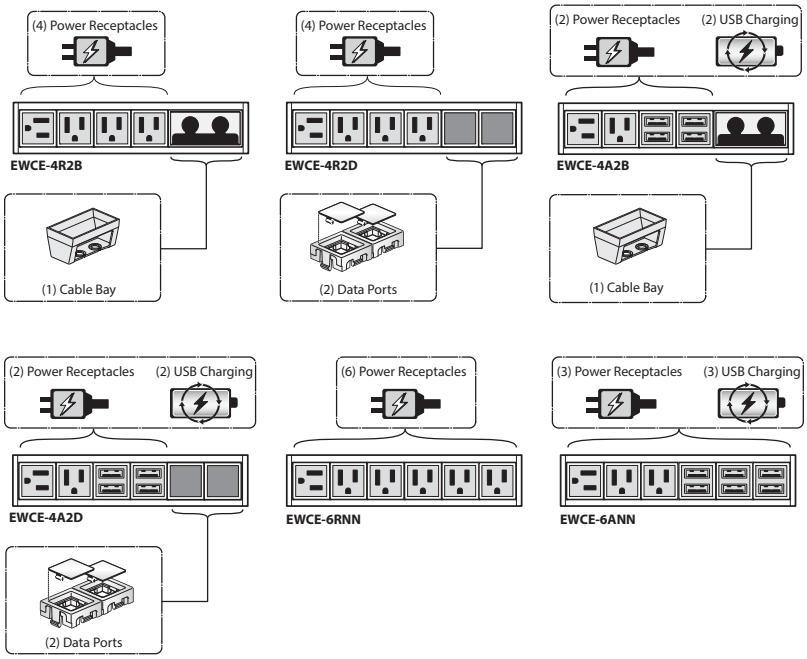

# Specification Guide – workware

# Table of Contents – workware™ Specification Guide

## Product Overview – Introduction to workware

Welcome to workware . . . . . 50
Technology Enabled Spaces. . . . . 52
Choosing the right workware Application . . . . . 53
Steps for Specifying workware connect and workware view . . . . . 54

## Statement of Line – workware

Statement of Line . . . . . 56-60

## Product Details – workware

workware connect

Interface Modules – Non-Switching . . . . . 62
Port Options . . . . . 63
Dimensions and Cutout Sizes . . . . . 64
Interface Module – Switching . . . . . 65
Port Options. . . . . 66
Dimensions and Cutout Sizes. . . . . 67
Touch Control . . . . . 68
Processor. . . . . 69
Power Relay Cord . . . . . 70
Workware Wireless Base and Pro . . . . . 71
Network Configurations . . . . . 72

workware view

Table Mount . . . . . 73-74
Dimensions . . . . . 75-77
Monitor Considerations . . . . . 78-79
Table Mounting Guidelines
Tabletop Construction . . . . . 80
Tabletop Edge Profiles. . . . . 81
Tabletop Shapes. . . . . 82
Leg Interference . . . . . 83
Recommended Table Sizes . . . . . 84-91
Wall Mount . . . . . 92-93
Dimensions . . . . . 94-96
Monitor Considerations . . . . . 97-98
Enclose Wall – Mounting Applications . . . . . 99
Center Mount Application. . . . . 100-103
Side Rail Mount Application . . . . . 104-107
Structural Wall – Mounting Application . . . . . 108-109
Clearance For Monitor Installation . . . . . 110

workware Accessories

Camera Mount Shelf (T) – Table Mount . . . . . 111
Camera Mount Shelf (W) – Enclose Wall / Structural Wall Mount. . . . . 112
Cable Base . . . . . 113
Cable Base Cable Retractor . . . . . 114
Cable Column . . . . . 115
Wire Manager – Horizontal. . . . . 116
Processor Mounting Bracket . . . . . 117

# Table of Contents – workware™ Specification Guide

## Product Applications – workware connect / workware view


Technology Applications Overview ..... 120-212
Cable Sharing Application ..... 122-129
Cable Sharing with Touch Control Application ..... 130-137
Wireless Sharing Application ..... 138-145
Wireless Sharing with Cable Backup Application ..... 146-153


## Product Overview – Mobile Monitor Easel


Using Mobile Monitor Easels in Technology Enabled Spaces ..... 153
Separately Specified Components ..... 157
workware connect Technology Applications for Mobile Monitor Easels ..... 158
Switching, Non-Switching and No Interface Module Components ..... 159
Steps to Specify a Complete Mobile Monitor Easel ..... 160


## Product Details – workware connect for the Mobile Monitor Easel


Interface Modules – Non-Switching ..... 162
  Port Options ..... 163
Interface Module – Switching ..... 164
  Port Options ..... 165


## Product Details – workware view – Mobile Monitor Easel


Mobile Monitor Easel ..... 166
  Dimensions ..... 167
  Seated/Standing Heights ..... 168
  Monitor Considerations ..... 169
Tiles and Shelf Tiles ..... 170-173
workware Accessories – Camera Mount Shelf (T) for Table Mount or Mobile Monitor Easel ..... 174


## Product Applications – workware Mobile Monitor Easel


Technology Applications Overview ..... 176-177
Wireless Sharing Application (option 1) ..... 178-179
Wireless Sharing Application (option 2) ..... 180-181
Cable Sharing Application ..... 182-183
Digital Signage Application ..... 184-185


## Glossary – workware


Glossary – workware ..... 186-187


## Technical Specifications – workware


Technical Specifications ..... 190-193

**This page intentionally left blank.**

# Product Overview – Introduction to workware

# Product Overview – Introduction to workware

## Welcome to workware™

Adaptable technology solutions to collaborate and share in a digital world.

## Easy Digital Sharing

- **Freedom To Share**

  The introduction of new technology makes us all work better and at times can bring new frustration into the workplace. workware™ is unique in that it makes digital sharing and collaboration with technology easy. workware is fully digital and self-configuring to most monitors (single or dual), laptops, tables and cables bringing new freedom to share and connect. Easily switch presenters, enable video conferencing, work in quad view, and make side by side comparisons. With workware many of the hassles that come along with technology are eliminated.

- **Share Wirelessly**

  The workware wireless feature allows for even more digital sharing possibilities. An unlimited number of users can spontaneously share data when using wireless, opening up new possibilities in the way we work, share and collaborate. Additionally with quad view, up to four users can share one monitor all displaying their own digital content. Wireless sharing can be done whether in the same room or from locations around the world.

- **Easy Switching**

  When you are collaborating with technology, switching between digital devices is essential but sometimes baffling. Workware offers several unique features that make sharing data easier. Switching can now be done with a touch screen on the interface module when in wired mode or by using a digital interface when in wireless mode. This eliminates the need for passing cables around a table. Workware also offers a video conference mode. This mode utilizes two monitors giving users the ability to use one screen for remote participants and the other screen to share local content.

## Integrates Anywhere

- **A Go Anywhere Solution**

  Whether it's used in an informal café setting, open plan workspaces, project rooms, conference rooms or learning environments, the impact on the way we work and collaborate together is powerful.

- **Adapts To Existing Furniture Applications**

  With other technology sharing products, you are required to upgrade furniture systems to be compatible, with workware, getting up and running is not dependent upon new furniture purchases. workware can retrofit into many existing furniture applications if purchasing new is not an option or needs to be delayed. workware's combined software and hardware capabilities make your existing office work harder and smarter.

- **Versatile Solutions**

  We understand that different users need different solutions. workware was designed to be flexible to those changing needs. The workware interface module allows for 4 levels of connectivity to monitor displays. The solutions are scalable for wired or wireless environments.

## Welcome to workware (Continued)

### A Secure And Fully Supported Solution For Digital Sharing That Works Within Your Infrastructure.

- **Works within your existing infrastructure**
  - Works with existing technology – including wireless, video conferencing, monitors and a wide variety of user input devices.
  - Full platform of connectivity options .
  - Self configuring to most monitors.
  - Applications using the Processor can upgrade analog signals into digital signals.
  - Most workware applications natively incorporates HDMI so no conversions are needed.
  - Future proofing and adaptability mean you get updates not replacements.
  - Evolves with your needs – the system can easily upgrade the hardware and software of the system without disturbing work settings or reconfigurations.
- **A Secure Environment**
  – As secure as your wireless network –physically plugs into your network to leverage the current infrastructure.
  – Passwords and login codes create a secure environment.
  – One way communication for remote users ensures no eavesdropping.
  – Each meeting is secured by a rolling 4 digit code so only those invited can view and share. – two levels of security.
- **Fully Supported Beyond Installation**
  – Easy to set up and install.
  – 7am - 7 pm PST (west coast) and EST (east coast) M-F toll technical call center support line.
  – Modular design is adaptable and provides future proofing for upgrades not replacements.
  – 3 year warranty offered upon registration.
  – Trained certified installers available.
  – On-line documents and help.

### Elegantly Designed

- **Blends Seamlessly With Any Environment**
  Designed by the Haworth Design Studio, workware incorporates a clean elegant design into technology rich spaces. The sleek and low profile sliding door is compatible with most tables or desks whether new or existing. workware's elegant design seamlessly blends into all work environments without detracting from the aesthetic appearance of a facility.
- **Numerous Design Choices**
  workware offers many design choices to meet a variety of interior design needs across facilities. It can be painted, or anodized for a customized aesthetic in any environment and is available in two sizes including a wide and narrow version.
- **Tames Technology Chaos**
  The video switching technology has hidden cables that are installed under the table. Cables are tucked away in the unit creating a clutter free space. This design features work to tame the chaos that is often introduced with technology.

# Product Overview – Introduction to workware

## Technology Enabled Spaces

A space that encourages the use of emerging technologies for a variety of activities including collaboration, audio / video conferencing, content creation, planning and data sharing.

### think.

**Strategic Thinking**

- Private Office
- Conference Rooms
- R&D
- Brainstorming
- Product Development

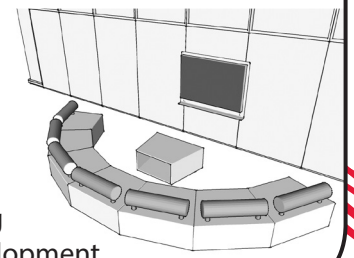

### connect.

**Social Spaces**

- Open Plan
- Lounge
- Lobby
- Cafe

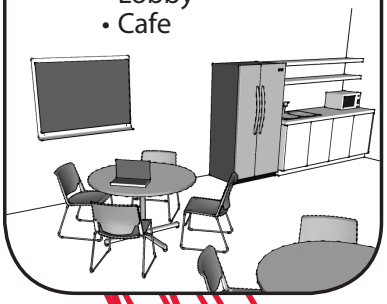

### Technology Enabled Spaces

- ✔ Collaboration
- ✔ Video Conferencing
- ✔ Content Creation
- ✔ Planning
- ✔ Data Sharing

### do.

**Tactical Execution**

- Open Plan – Group Spaces
- War Rooms (Project Rooms)
- Touch Down Spaces
- Conference Rooms
- Impromptu Standing Meetings

### see.

**Presentation**

- Class Rooms
- Training Spaces
- Multi-Purpose Rooms
- Board Rooms

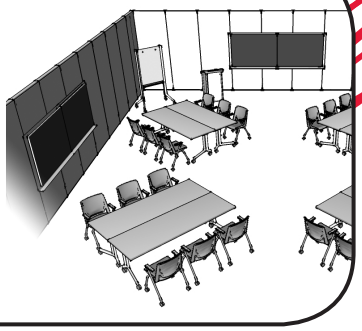

# Product Overview – Introduction to workware

## Choosing the Right workware Technology Application

We understand that different users need different solutions. Workware was designed to be flexible to those changing needs. The workware interface module allows for 4 levels of connectivity to monitor displays. The solutions are scalable for wired or wireless environments.

### workware connect Applications:

| Features: | cable sharing | cable sharing with touch control | wireless sharing | wireless sharing with cable backup |
|---|---|---|---|---|
| **Sharing Method**<br>How users share their presentation on the Monitor. | **Cable Sharing**<br>• Presenters use a single audio/video cable connected directly to a monitor. This provides audio/video access to the monitor to share presentations. | **Cable Sharing With Touch Control**<br>• Presenters may access the monitor to share a presentation by connecting audio/video cables to their device and activating the corresponding button on the Touch Control. | **Wireless Sharing**<br>• Presenters use workware's Wireless Presentation Software to access the building's wireless wi-fi network which provides them audio/video access to the monitor to share presentations. | **Wireless Sharing With Touch Control**<br>• Using the Touch Control, users may switch the system to wireless mode and use workware's Wireless Presentation Software which provides them audio/video access to the monitor to share presentations.<br>**Cabled Sharing With Touch Control**<br>• Presenters may access the monitor to share a presentation by connecting audio/video cables to their device and activating the corresponding button on the Touch Control. |
| **Switching Method**<br>How users switch the monitor presentation to other users. | **Physical Cable Switching**<br>• Users switch between presenters by disconnecting the audio/video cable from the first user's device and connecting it to the second user's device. | **Touch Control Switching**<br>• Users may switch the monitor presentation to other users by activating the corresponding button on the Touch Control. | **Wireless Switching**<br>• Users may switch between wireless presenters using controls on workware's Wireless Presentation Software. | **Touch Control Switching**<br>• Users may switch the monitor presentation to other users by activating the corresponding button on the Touch Control.<br>**Wireless Switching**<br>• When the Wireless Mode is active, users may switch between wireless presenters using controls on workware's wireless presentation software. |
| **Maximum Number of User Connections to the Monitor** | **1 Cabled Connection**<br>**(Maximum per Monitor)**<br>• **Single Monitor Applications** have one audio/video cable directly wired to the monitor providing one connection to the monitor for presentations.<br>• **Dual Monitor Applications** have one audio/video cable directly wired to each monitor providing two separate connections for presentations. | **4 Cabled Connections**<br>**(Maximum per Interface Module)**<br>• Each Interface Module can accommodate a maximum of 4 cabled connections. | **workware Wireless Pro**<br>• Unlimited* Simultaneous presentations of users/content.<br>**workware Wireless Base**<br>• Upto 10* simultaneous users presentations.<br>• Upto 4* simultaneous content presentations.<br>**The amount of simultaneous users/content is limited to the bandwidth capabilities of the network.* | **4 Cabled Connections**<br>**(Maximum per Interface Module)**<br>• Each Interface Module can accommodate a maximum of 4 cabled connections.<br>**workware Wireless Pro**<br>• Unlimited Simultaneous presentations of users/content*.<br>**workware Wireless Base**<br>• Upto 10 simultaneous users presentations.*<br>• Upto 4 simultaneous content presentations.*<br>**The amount of simultaneous users/content is limited to the bandwidth capabilities of the network.* |
| **Power Control**<br>How to turn on monitor/system. | **Monitor Remote Control**<br>• Monitor power is controlled using the monitor remote control (field supplied) or with the power button on the monitor. | **Touch Control**<br>• Monitor power is controlled using the power button on the Touch Control. | **Monitor Remote Control**<br>• Monitor power is controlled using the monitor remote control (field supplied) or with the power button on the monitor. | **Touch Control**<br>• Monitor power is controlled using the power button on the Touch Control. |
| **Quad View Feature**<br>Displays four user presentations on one screen. | **Quad View is not available for cabled users.** | **Quad View is not available for cabled users.** | **Quad View is available for wireless users.** | **Quad View is available for wireless users only (not available for cabled users).** |
| **Other Advantages** | • Simple configuration.<br>• Plug and play access for cabled presenters (no software needed). | • Plug and play access for cabled presenters (no software needed).<br>• Touch Pad allows easy switching between cabled presenters and presentation modes.<br>• Touch Pad/Processor supports Video Conferencing Mode. | • Simple configuration.<br>• Mobility for wireless users.<br>• Wireless Presentation Software makes switching between presenters quick and easy. | • Mobility for wireless users.<br>• Plug and play access for cabled presenters (no software needed).<br>• Touch Pad allows easy switching between cabled presenters and presentation modes.<br>• Touch Pad/Processor supports Video Conferencing Mode. |

# Product Overview – Introduction to workware

## Steps for Specifying workware connect and workware view

### Step 1 - Technology – workware connect:

workware connect products provide wireless and/or cabled sharing for monitor presentations, easy methods for switching between presenters and user access for power, data and communications.

**workware connect applications:**

- To meet the needs of different users workware connect may be specified using any of these 4 levels of connectivity. The applications are flexible and scalable, offering a variety choices for either cabled sharing or wireless sharing or a combination of both.
- Examine the capabilities of each application and determine which best fits the needs of the project. The application will determine which workware components need to be specified.

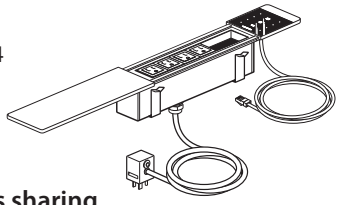

**cable sharing** | **cable sharing with touch control** | **wireless sharing** | **wireless sharing with cable backup**

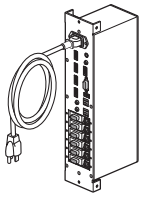

**When specifying workware connect components, consider the following:**

- External devices and equipment that will be used (PC/Mac Laptops, Tablets, Smart Phones, Conference Phone, Video Conferencing Equipment) and how they will connect to workware.
- Number of users who need to share a presentation on the monitor and the need to switch between different presenters.
- User requirements for power and data (power receptacles or USB charging ports, data jack adapters).
- Access to building power for workware connect components (Wireless Module, Interface Module, Processor, Power Relay Cord) and field supplied equipment (Monitor, Video Conferencing Equipment).
- Access to the building data and communications network for workware connect components (Wireless Module, Data Jack Adapters) and field supplied equipment (Conference Phone, Video Conferencing Equipment).

### Step 2 - Monitor Support – workware view:

workware view products are designed to provide monitor support and integrate the monitor with the workspace.

**When specifying workware view consider the following:**

- Mounting solution (table mounted, Enclose wall mounted or structural wall mounted).
- Single monitor or dual monitors.
- Monitor size and weight.
- With shroud or with no shroud.
- Do tables and walls meet all specification requirements for mounting units.

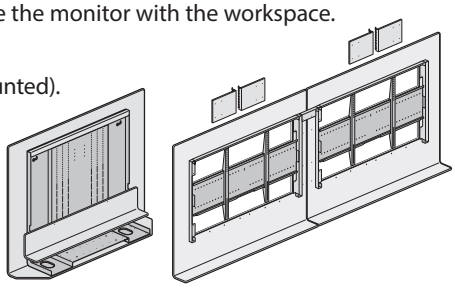

### Step 3 - Table:

workware connect and view products are designed to be installed on most new or existing tables that meet specification requirements for installing workware (tables are not required in all applications).

**When specifying a table consider the following:**

- Tabletop thickness and construction (minimum 1⅛" thick and a maximum of 2" thick solid tabletops).
- workware connect cutout size and location in the tabletop.
- Tabletop shape (workware view only mounts on straight edges).
- Table size (table must be large enough to accommodate users, support optional workware view and provide knee clearance for any wire management under the tabletop).
- Table leg location (ensure table legs do not interfere with workware view mounting locations or workware connect cutout locations).
- workware view table mount units are recommended for use with certain sizes of Planes Interior Leg Conference Tables (square, rectangular and hexagon shapes only) or Reside Tables (square or rectangular only).

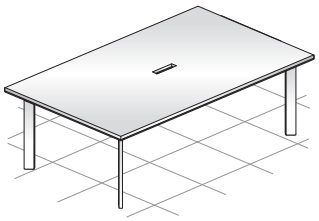

### Step 4 - Cable Management:

Cable management products are recommended to manage workware components, cables and cords.

**When specifying cable management components, consider the following:**

- Location and number of components, cables and cords required for an application and how they will be routed.
- Cable Bases are recommended for housing components, cables and cords.
- The Cable Base Cable Retractor is for use with the Cable Base to provide easy access and storage of user audio/video cables without tangling.
- Processor Bracket may be used to mount the processor under the tabletop.
- Horizontal Wire Manager for routing cables horizontally under the tabletop.
- Cable Column for routing cables vertically under a tabletop.

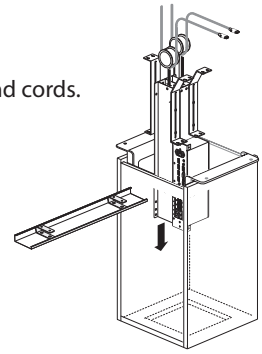

# Statement of Line – workware

# Statement of Line – workware connect

## workware connect

### Interface Module – Non-Switching

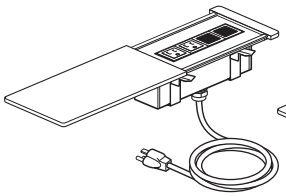

Non-Switching - 4 Port – Wide
EWCA-_____-NPS_BN

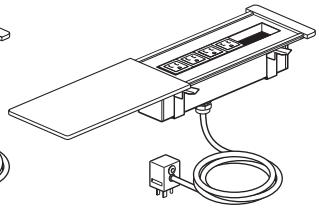

Non-Switching - 6 Port – Wide
EWCA-_____-NPS_BN

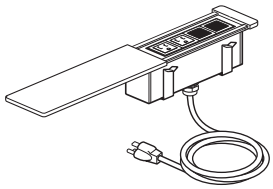

Non-Switching - 4 Port – Narrow
EWCB-_____-NPS_BN

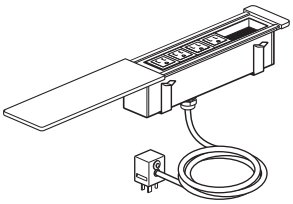

Non-Switching - 6 Port – Narrow
EWCB-_____-NPS_BN

### Interface Module– Switching

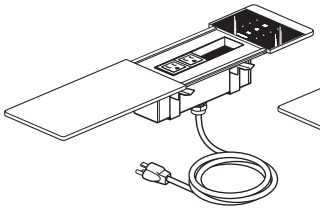

Switching - 4 Port – Wide
EWCA-_____-CPS_BN

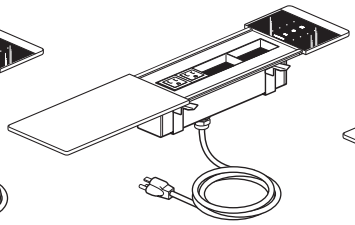

Switching - 6 Port – Wide
EWCA-_____-CPS_BN

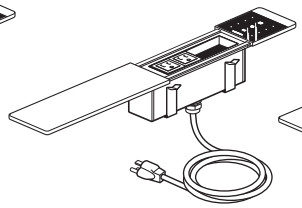

Switching - 4 Port – Narrow
EWCB-_____-CPS_BN

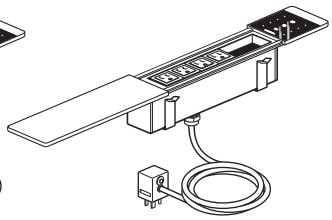

Switching - 6 Port – Narrow
EWCB-_____-CPS_BN

#### Components Included with the Interface Module – Switching:

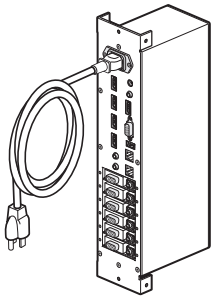

**Processor and Power Cord**
- Processor is standard in black.
- Detachable Processor power cord is 6' long (black).

**Wireless Module HDMI Cable**
- Cable is 6' long (black).
- Connects the processor to the Wireless Module.

**Touch Control Data Cable**
- Cable is 6' long (black) with RJ-12 connector heads.
- Connects the processor to the Touch Control.

**Power Relay Cord Components:**

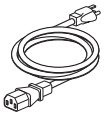

**Power Cord**
- 6' Long – Black
- Connects the Switch Box to a Receptacle for power.

**Switch Box**
- Power Switch that controls monitor power.

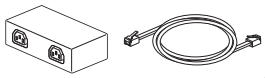

**Data Cable**
- 6' Long
- Connects the Switch Box to the Processor.

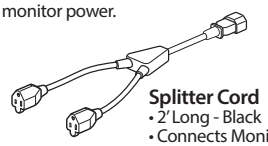

**Splitter Cord**
- 2' Long - Black
- Connects Monitor(s) power cable(s) to the Switch Box.

**User Cable Options:**

HDMI Cable
- The HDMI Cable is 10' long (black).
- Connects the user's device to the Processor.

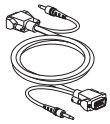

VGA+Audio Cable
- Cable is 12' long (black).
- Connects the user's device to the Processor.

### Wireless Module

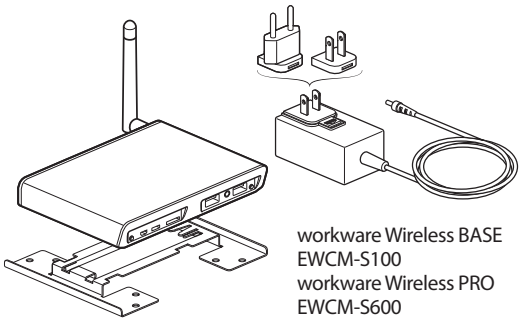

workware Wireless BASE
EWCM-S100
workware Wireless PRO
EWCM-S600

# Statement of Line – workware view

## workware view

### Table Mount

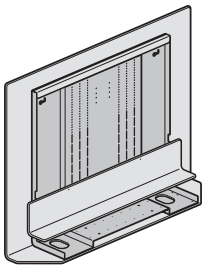

With Shroud
Single Monitor
EWVT-S_SD-P

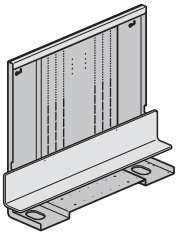

Without Shroud
Single Monitor
EWVT-S_ND-P

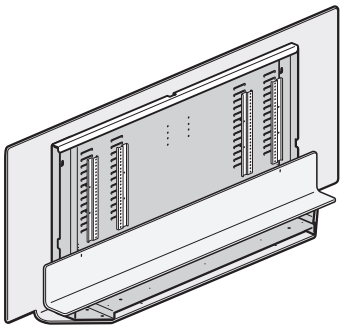

With Shroud – Dual Monitor
EWVT-DCSD-P

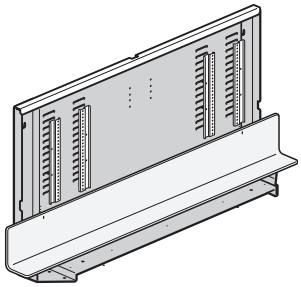

Without Shroud – Dual Monitor
EWVT-DCND-P

### Enclose Walls – Proud Mount

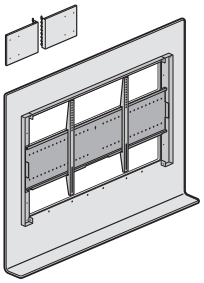

Single Monitor With Shroud
3 ⅛" Deep Radius Edge Shelf
EWVE-S_SS-PP

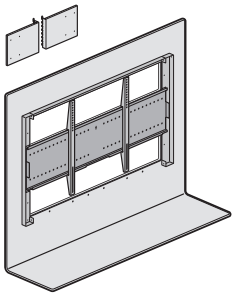

Single Monitor With Shroud
12" Deep Radius Edge Shelf
EWVE-S_SD-PP

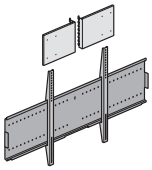

Single Monitor
Without Shroud
EWVE-SNNN-PN

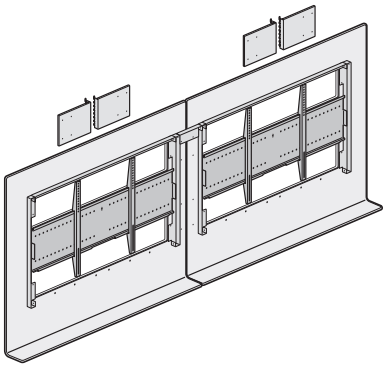

Dual Monitor With Shroud
3 ⅛" Deep Radius Edge Shelf
EWVE-D_SS-PP

### Structural Walls – Proud Mount

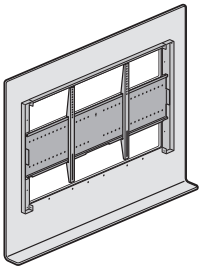

Single Monitor With Shroud
3 ⅛" Deep Radius Edge Shelf
EWVD-S_SS-PP

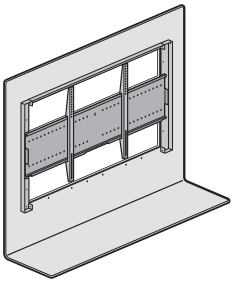

Single Monitor With Shroud
12" Deep Radius Edge Shelf
EWVD-S_SD-PP

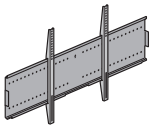

Single Monitor
Without Shroud
EWVD-SNNN-PN

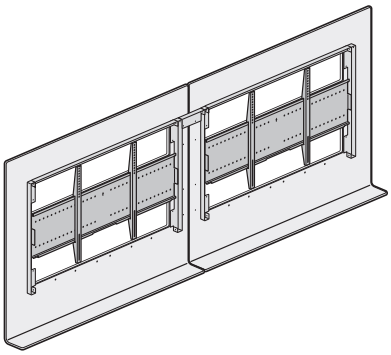

Dual Monitor With Shroud
3 ⅛" Deep Radius Edge Shelf
EWVD-D_SS-PP

# Statement of Line – workware Accessories

## workware Accessories

### HDMI Cable

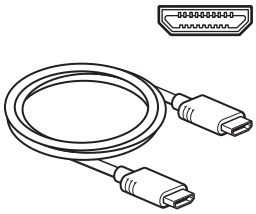

EWCX-_ _01-H

### VGA+Audio Cable

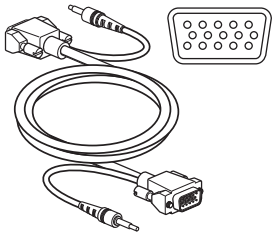

EWCX-_ _ 01-V

Note • 50′ VGA Cable does not include integrated Audio cable.

### Audio Cable

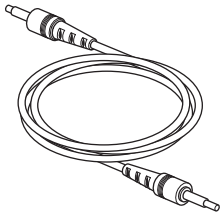

EWCX-_ _01-A3

### Power Relay Data Cable

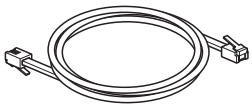

EWCX-_ _ 01-PR

### Power Relay Adapter Cords

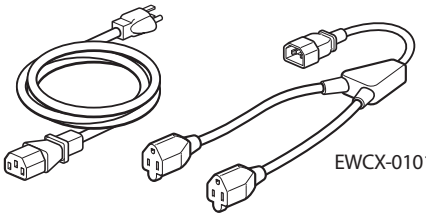

EWCX-0101-PA

### Camera Mount Shelf

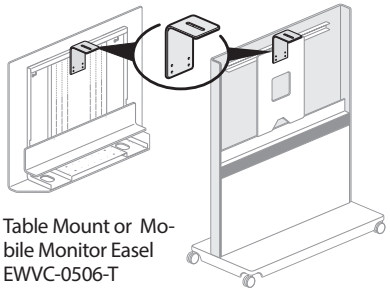

Table Mount or Mobile Monitor Easel
EWVC-0506-T

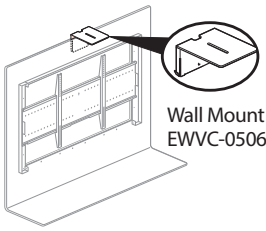

Wall Mount
EWVC-0506-W

### Planes Cable Base

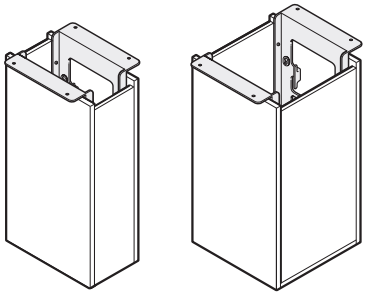

TA01-0814-_ TA01-1414-_

### Cable Retractor

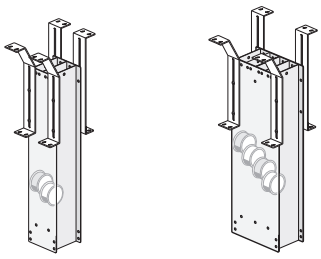

EWCX-BRWM-2A EWCX-BRWM-4A

### Cable Column

TA01-0217

### Wire Manager – Horizontal

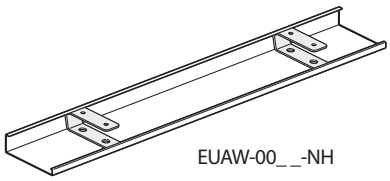

EUAW-00_ _-NH

### Processor Mounting Bracket

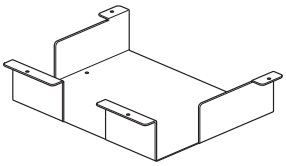

EWCX-BRPR

# Statement of Line – workware view – Mobile Monitor Easel

## Mobile Monitor Easel - No Interface Module

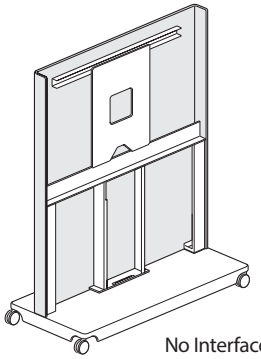

No Interface Module
52"-55" Monitor –
Seated Height
EWVM-SB4P-N

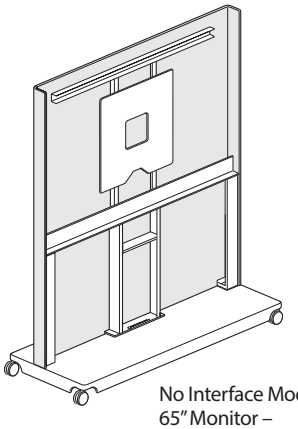

No Interface Module
65" Monitor –
Seated Height
EWVM-SC4P-N

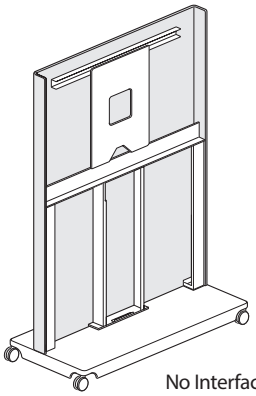

No Interface Module
52"-55" Monitor –
Standing Height
EWVM-SB7P-N

## Mobile Monitor Easel - For Non-Switching Interface Module

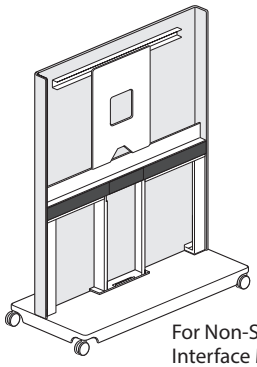

For Non-Switching
Interface Module
52"-55" Monitor –
Seated Height
EWVM-SB4P-P

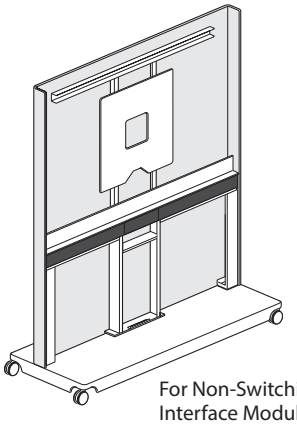

For Non-Switching
Interface Module
65" Monitor –
Seated Height
EWVM-SB4P-P

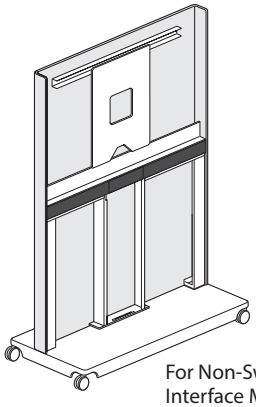

For Non-Switching
Interface Module
52"-55" Monitor –
Standing Height
EWVM-SB7P-P

## Interface Module For Easel – Non-Switching – 6-Port

Non-Switching
EWCE - _ _ _ _- NNNNBNPW

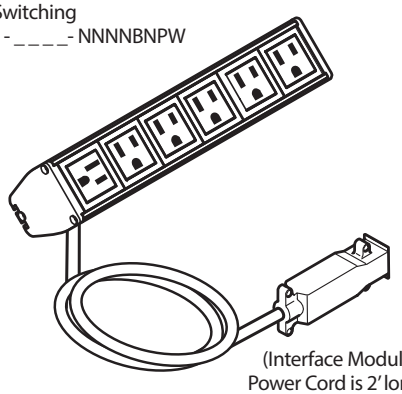

(Interface Module
Power Cord is 2' long)

# Statement of Line – workware view – Tile / Shelf Tile

## Tile for Mobile Monitor Easel – No Interface Module

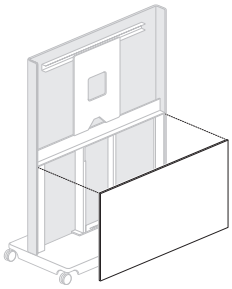

52″-55″ Monitor
Seated Height
No Interface
EWVX-PB4_-NN

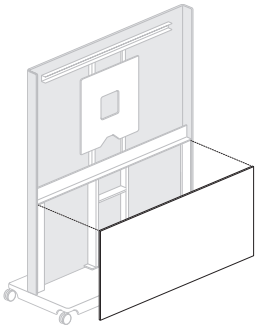

65″ Monitor
Seated Height
No Interface
EWVX-PC4_-NN

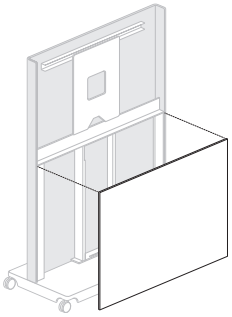

52″-55″ Monitor
Standing Height
No Interface
EWVX-PB7_-NN

## Tile for Mobile Monitor Easel – Switching or Non-Switching Interface Module

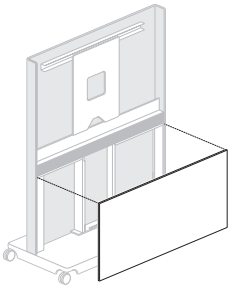

52″-55″ Monitor
Seated Height
Non-Switching
EWVX-PB4_-PN

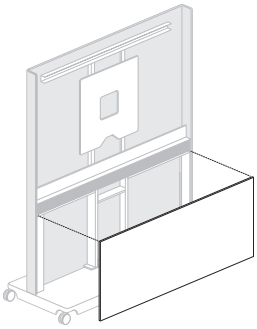

65″ Monitor
Seated Height
Non-Switching
EWVX-PC4_-PN

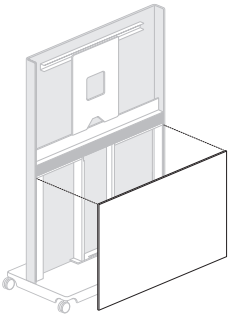

52″-55″ Monitor
Standing Height
Non-Switching
EWVX-PB7_-PN

## Shelf Tile for Mobile Monitor Easel – No Interface Module

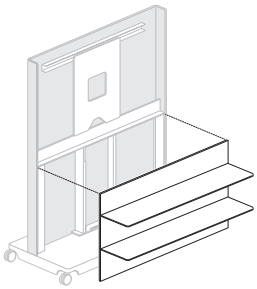

52″-55″ Monitor
Seated Height
No Interface
EWVX-SB4P-N2

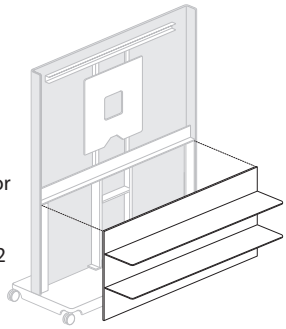

65″ Monitor
Seated Height
No Interface
EWVX-SC4P-N2

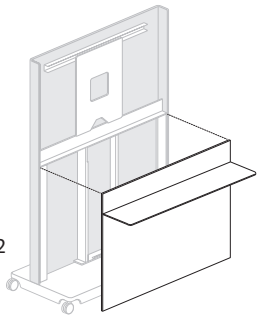

52″-55″ Monitor
Standing Height
No Interface
EWVX-SB7P-N1

## Shelf Tile for Mobile Monitor Easel – Switching or Non-Switching Interface Module

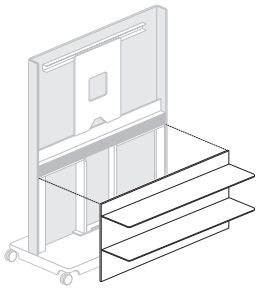

52″-55″ Monitor
Seated Height
Non-Switching
EWVX-SB4P-P2

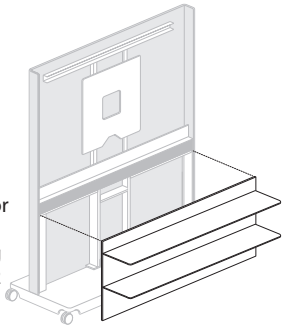

65″ Monitor
Seated Height
Non-Switching
EWVX-SC4P-P2

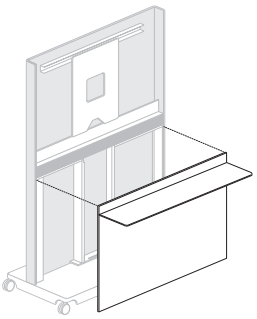

52″-55″ Monitor
Standing Height
Non-Switching
EWVX-SB7P-P1

Note • **Tile shelves are only available in painted steel.**

# Product Details – workware

# Product Details – workware connect Interface Module – Non-Switching

## Non-Switching – Interface Module – Components

- Provides power, data, communication and audio/video access for users.
- Order wide or narrow widths with four or six port configurations.
- May be specified with a variety of port configurations to fit user requirements.
- Mounts on table top cutouts.

Specify For the following workware applications:

cable sharing

wireless sharing

## What's Included:

### A Interface Module – Non-Switching

**Includes the following components:**

- A1 **End Trim (Anodized or Painted Finish)** – Stationary component that provides phone cable pass through.
- A2 **Communication Opening** – Opening in the End Trim that allows routing of a field supplied phone cable.
- A3 **Bezel (clear anodized aluminum)** – Frame that fits in the table top cutout and includes the track for the sliding door.
- A4 **Sliding Door (anodized or painted finish)** – Conceals and provides user access to power receptacles, cables and ports. Slides open or closed 1/8" above the table .
- A5 **Attachment Hardware** – Attaches Interface Module inside the cutout in the table top.
- A6 **Processor Power Cord/Conduit** – **Corded option** – includes 12' (black) 15 Amp cord with plug. Units with 4 power receptacles or more will include a fused plug.
  **Hardwire Option** – includes 6 foot flexible metal conduit feed with wires for hardwire connection.
- A7 **Power Receptacle (black)** Conventional three prong power receptacle - 15 Amp NEMA 5-15R configuration.

**Optional Components:**

- A8 **Cable Bay (black)** – Reservoir that houses user Audio/Video Cables (HDMI or VGA+Audio). Each Cable Bay occupies two ports in the Interface Module. Each Cable Bay accommodates a maximum of two audio/video cables.
- A9 **Data Jack Adapters (black)** – Accommodates most varieties of field supplied data jacks and includes blank data covers.
- A10 **USB Charging Receptacles (black)** – Includes two USB receptacles per port. USB ports are for charging only (no data) and share a 2000 mA supply.

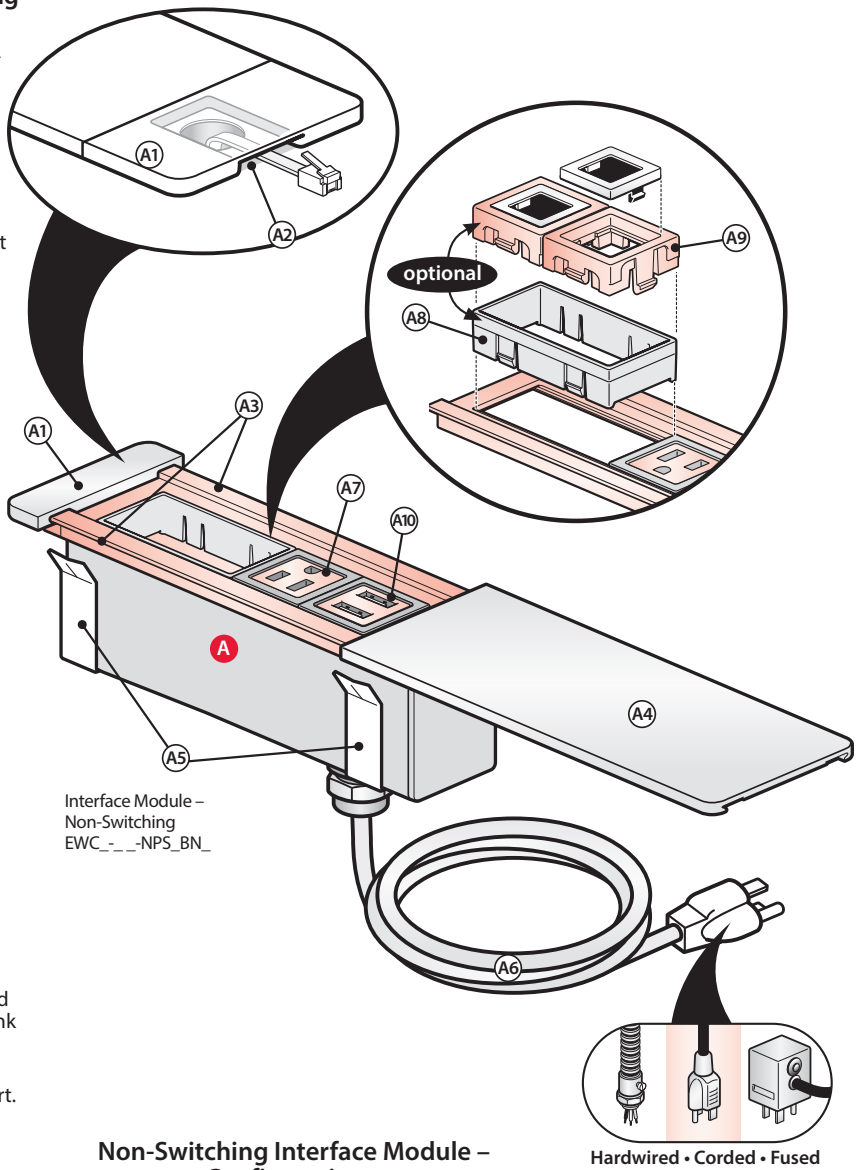


Interface Module – Non-Switching EWC_-_ _-NPS_BN_



Hardwired • Corded • Fused

### Non-Switching Interface Module – Configurations:

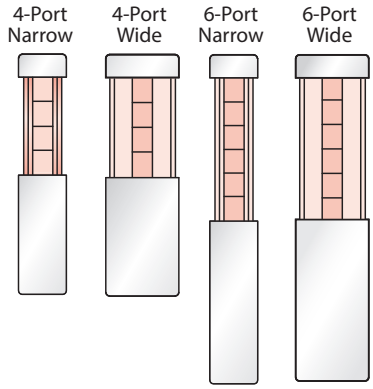

## Non-Switching Interface Module – Port Options

### 4 Port – Non-Switching – Port Options

**1 Power Port Options**

- **2R** (2) Power Receptacles
- **2A** (1) Power Receptacles and (1) USB Charging

**2 Data / Cable Port Options**

- **2B** (1) Cable Bay
  - Occupies (2) Port Locations
  - Cables Separately Specified

- **2R** (2) Power Receptacles
- **2A** (1) Power Receptacles and (1) USB Charging

- **2D** (2) Data Access Ports

- **4R** (4) Power Receptacles
- **4A** (2) Power Receptacles and (2) USB Charging

- **NN** No Data/No Cables

### 6 Port – Non-Switching – Port Options

**1 Power Port Options**

- **4R** (4) Power Receptacles
- **4A** (2) Power Receptacles and (2) USB Charging

**2 Data / Cable Port Options**

- **2B** (1) Cable Bay
  - Occupies (2) Port Locations
  - Cables Separately Specified

- **2R** (2) Power Receptacles
- **2A** (1) Power Receptacles and (1) USB Charging

- **4B** (2) Cable Bays
  - Occupies (4) Port Locations
  - Cables Separately Specified

- **3R** (3) Power Receptacles
- **3A** (2) Power Receptacles and (1) USB Charging
- **3B** (1) Power Receptacles and (2) USB Charging

- **3D** (3) Data Access Ports

- **6R** (6) Power Receptacles
- **6A** (3) Power Receptacles and (3) USB Charging

- **NN** No Data/No Cables

**Note**
- Configuration and quantity of power and data ports can not be modified in the field.
- Audio/Video Cables are separately specified for Non-Switching Interface Units. Cables must be specified at the proper length required to reach from the users device to the Monitor.

### 1 Power Port Options:

**Power Receptacles**
- Conventional 3 prong Power Receptacle (black)

**USB Charging Receptacles**
- Includes 2 USB receptacles per port. (black)
- USB charging only – No data.

**R Power Receptacles Only**

- **2R**
- **3R**
- **4R**
- **6R**

**A Both Power Receptacles and USB Charging Receptacles**
(even numbers or majority power receptacles)

- **2A**
- **3A**
- **4A**
- **6A**

**B Both Power Receptacles and USB Charging Receptacles**
(majority USB charging receptacles)

- **3B**

### 2 Data/Cable Port Options:

**Cable Bay**
- A reservoir that holds audio/video cables (black).
- A single Cable Bay accommodates a maximum of two video cables and occupies two ports in the Interface Module.

Cable Bay

**Data Access Ports**
- The Data Access Port option includes a tree of multiple data jack adapters used to accommodate most types of field supplied RJ45 data jacks.
- The VGA and microphone data jack adapters, included with the Data Jack Adapter Tree, may not be used because of clearance issues.
- Blank data covers are also included if data access is not required.
- Additional data jack adapters are available through eParts.

Data Access Port

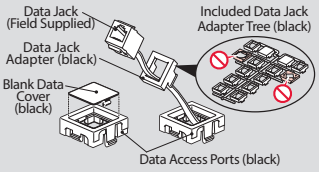


**B Cable Bay** (No Cables)

- **2B**
- **4B**

**D Data Access Port**

- **2D**
- **3D**

**NN No Data/No Cables**

# Product Details – workware connect Interface Module – Non-Switching

## Non-Switching Interface Module – Dimensions and Cutout Sizes

### 4-Port/Wide/Non-Switching – Interface Modules

**Top View – Door Closed and Open**

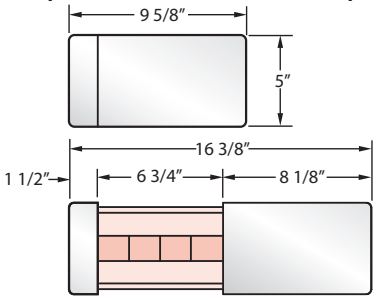


**Side View – Door Open**

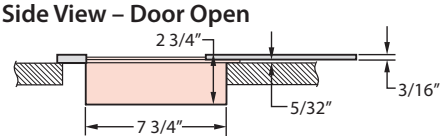


**Top View – Table Cutout Size**

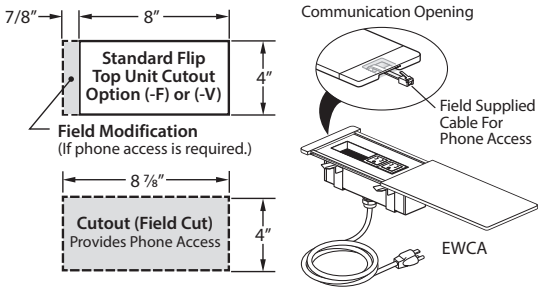


**Specifying Cutouts**

- 4-Port/Wide /Non-Switching – Interface Modules may be installed on tables specified with the standard Flip Top Unit cutout options (-F) or (-V). These standard cutout options do not provide access for the communication opening to run a phone cable.
- If access to the communication opening is required to run a phone cable, then the standard flip top unit cut-out option (-F) or (-V) must be field modified to accommodate it. The table top will be defaced.
- Tables that can't be specified with standard fliptop unit cutouts will have to be field cut. The table top will be defaced.

### 6-Port/Wide/Non-Switching – Interface Modules

**Top View – Door Closed and Open**

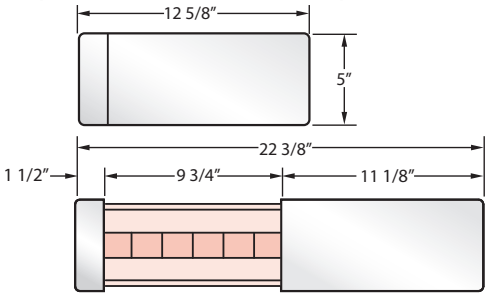


**Side View – Door Open**

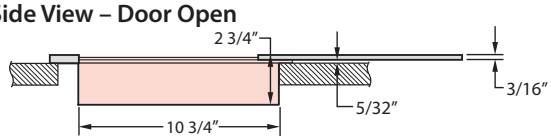


**Top View – Table Cutout Size**

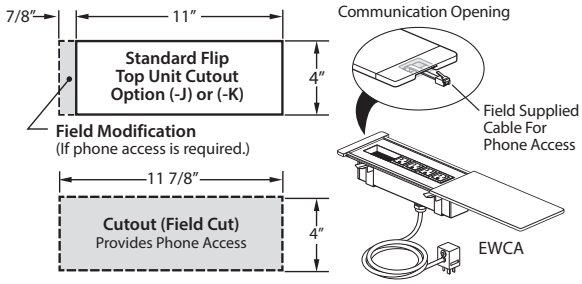


**Specifying Cutouts**

- 6-Port / Wide / Non-Switching – Interface Modules may be installed on tables specified with the standard Flip Top Unit cutout options (-J) or (-K). These standard cutout option do not provide access for the communication opening to run a phone cable.
- If access to the communication opening is required to run a phone cable, then the standard flip top unit cut-out option (-J) or (-K) must be field modified to accommodate it. The table top will be defaced.
- Tables that can't be specified with standard fliptop unit cutouts will have to be field cut. The table top will be defaced.

### 4-Port / Narrow / Non-Switching – Interface Module

**Top View – Door Closed and Open**

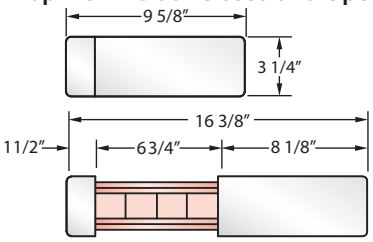


**Side View – Door Open**

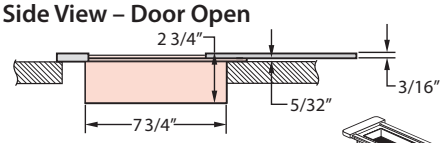


**Top View – Table Cutout Size**

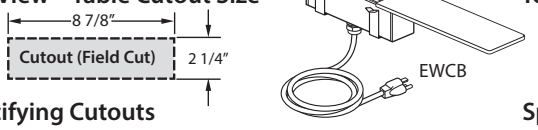


**Specifying Cutouts**

- Cutouts for the 4-Port / Narrow / Non-Switching – Interface Modules must be field cut (standard fliptop unit cutouts options are too wide). The table top will be defaced.

### 6-Port / Narrow / Non-Switching – Interface Module

**Top View – Door Closed and Open**

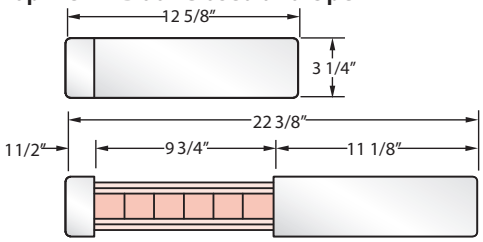


**Side View – Door Open**

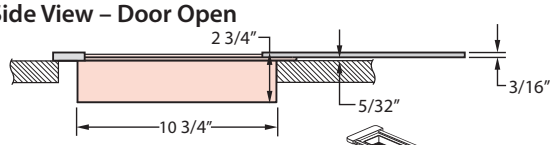


**Top View – Table Cutout Size**

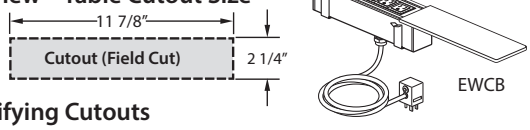


**Specifying Cutouts**

- Cutouts for the 6-Port / Narrow / Non-Switching – Interface Modules must be field cut (standard fliptop unit cutouts options are too wide). The Table top will be defaced.

## Interface Modules – Switching

- Provides power, data, communication and audio/video access for users.
- Order wide or narrow widths with four or six port configurations.
- Standard with Touch Control interface which controls monitor power, switching between cabled users and presentation modes.
- May be specified with a variety of port configurations to fit user requirements.
- Mounts on table top cutouts.

Specify For the following workware applications:

**cable sharing with touch control**

**wireless sharing with cable backup**

### Switching Interface Module includes the following components:

**A Interface Module**

- A1 **End Trim (Anodized or Painted Finish)** – Stationary component that provides phone cable pass through.
- A2 **Communication Opening** – Space in the End Trim that allows routing of a field supplied phone cable.
- A3 **Bezel (clear anodized aluminum)** – Frame that fits in the table top cutout with a track for the sliding door.
- A4 **Sliding Door (anodized or painted finish)** – Conceals and provides user access to power, cables and ports. Slides open and closed 1/8" above the table.
- A5 **Attachment Hardware** – Attaches Interface Module inside the cutout in the table top.
- A6 **Interface Module Power Cord/Conduit:**
  **Corded option** – includes 15 Amp cord with plug (12' long - black). Units with 4 power receptacles or more will include a fused plug.
  **Hardwire Option** – includes 6 foot flexible metal conduit feed with wires for hardwire connection.
- A7 **Power Receptacle (black)** – Conventional three prong power receptacle - 15 Amp NEMA 5-15R configuration.
- A8 **USB Charging Receptacles (black)** – Optional USB Charging Receptacle Includes two USB receptacles per port. USB ports are for charging only (no data) and share a 2000 mA supply.
- A9 **Cable Bay (black)** – Reservoir that houses user Audio/Video Cables (HDMI or VGA+Audio). Each Cable Bay occupies two ports in the Interface Module. Each Cable Bay accommodates a maximum of two audio/video cables.
- A10 **Touch Control Data Cable (6' long - black)** – Cable with RJ-12 Connectors that sends data between the Touch Control and the Processor.

**B User Audio/Video Cables** – A/V Cables connect the user's device to the Processor for cabled presentations (the switching Interface Module is specified with a choice of two or four audio/video cables – See the port options page for available configurations).

- B1 **HDMI Cable** (10' long - black) – Digital audio video cable that users pull out and connect their devices to for presentations.
- B2 **VGA+Audio Cable** (12' long - black) – Analog audio video cable that users pull out and connect their devices to for presentations.

**C Processor** (black)– The central core (brain) of workware that controls switching between presenters, presentation modes and system power.

- C1 **Processor Power Cord** (6' long - black) – provide power to the Processor. Requires access to building power.

**D Power Relay Box** (black) – A switch that controls power to the monitor(s), turning them on and off. It is activated by the processor when the power button on the Touch Control is activated.

- D1 **Power Relay Data Cable** (6' long - black) – Sends data from the Processor to the Power Relay Box to switch attached monitor(s) on and off.
- D2 **Power Relay Power Cord** (6' long - black) – Cord that connects the building power to the Power Relay Box.
- D3 **Power Relay Splitter Cord** (2' long - black) – Power Cord/Splitter that attaches the Power Relay Box to the Monitor power cord(s).

**F HDMI Cable for optional Wireless Module** (6' long - black) – Digital audio/video cable that connects the Processor to the Wireless Module for wireless user presentations (Wireless Module is separately specified).

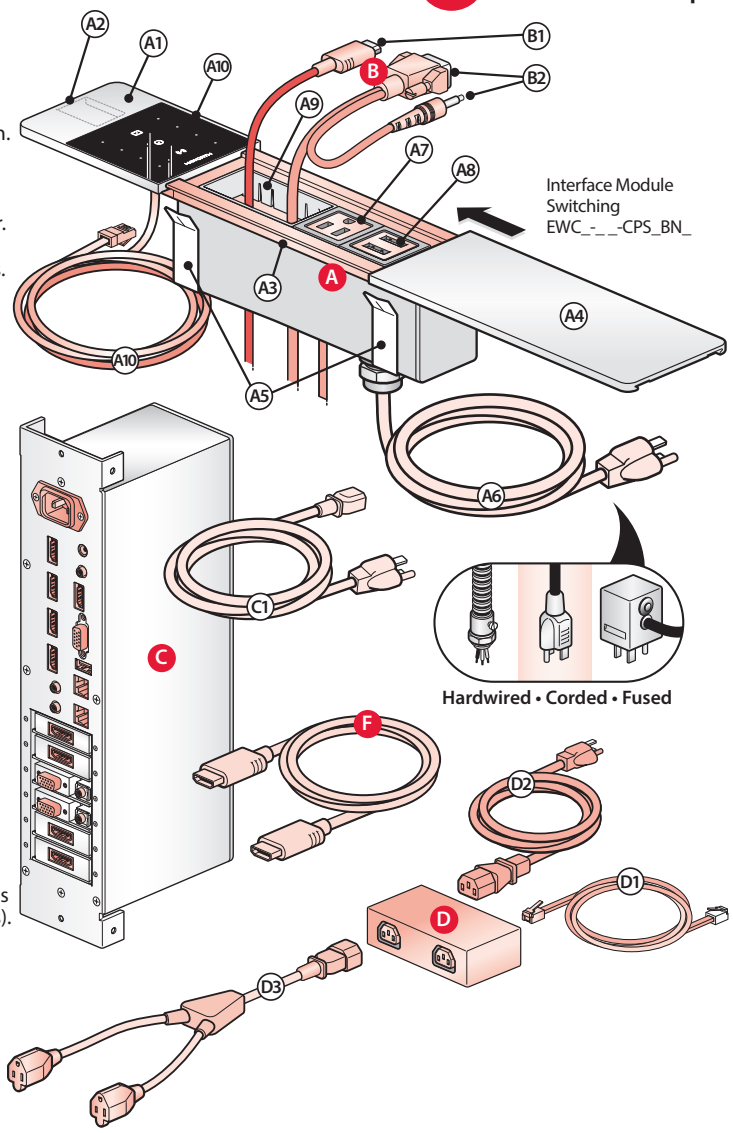


### Switching Interface Module Configurations:

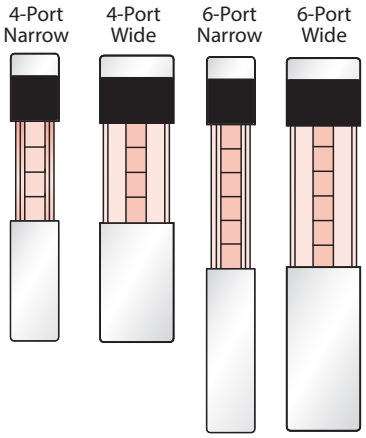

# Product Details – workware connect – Interface Module – Switching

## Switching Interface Module – Port Options

### 4 Port – Switching – Port Options

**1 Power Port Options**

**2 Data / Cable Port Options**

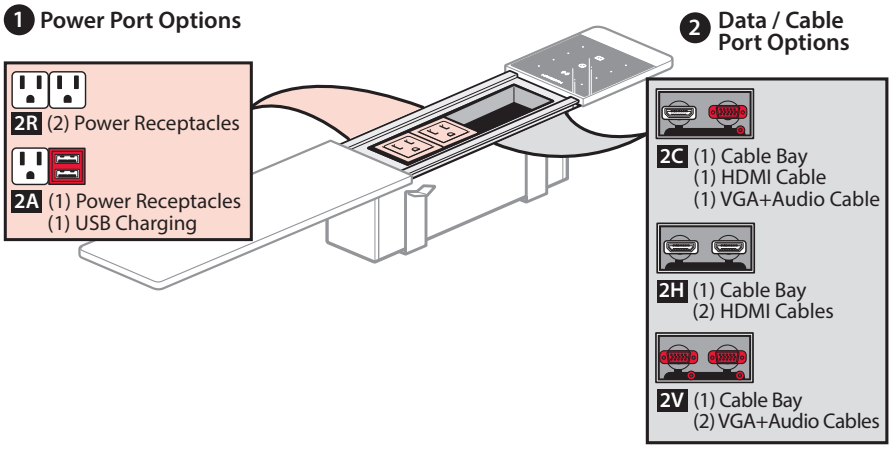


### 6 Port – Switching – Port Options

**1 Power Port Options**

**2 Data / Cable Port Options**

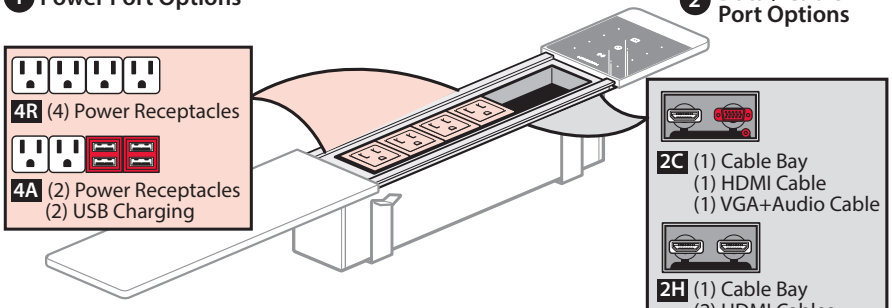


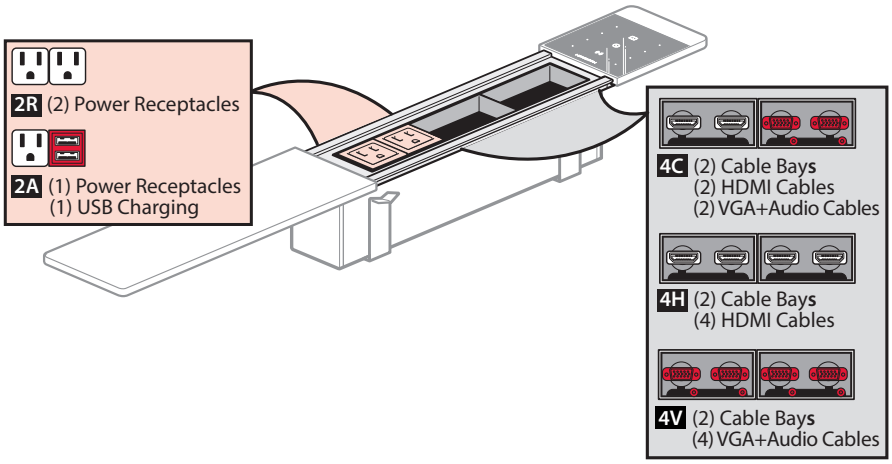


**Note** • **Configuration and quantity of power and data ports can not be modified in the field.**

### 1 Power Port Options:

**Power Receptacles**

- Conventional 3 prong Power Receptacle. (black)

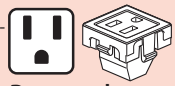

**USB Charging Receptacles**

- Includes 2 USB receptacles per port. (black)
- USB charging only – No data.

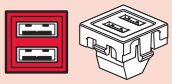

**R Power Receptacles Only**

2R

4R

**A Both Power Receptacles and USB Charging Receptacles**

2A

4A

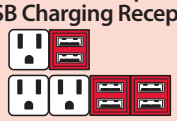

### 2 Data/Cable Port Options:

**Cable Bay**

- A reservoir that holds and provides access to audio/video cables (black).
- A single Cable Bay accommodates a maximum of two video cables.
- Each cable bay occupies two ports in the Interface Module.

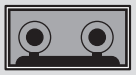

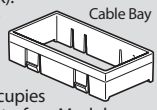


**HDMI Cable**

- Transmits digital video and audio content.
- HDMI Cable is 10' long (black).

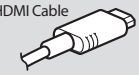

**VGA+Audio Cable**

- Transmits analog video and audio content.
- The 3.5mm audio cable extends 20" from the VGA connector head on the user end and 8" on the end that connects to workware.
- VGA Cable and Audio Cable are 12' long (black).

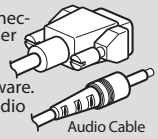


**C Both HDMI cables and VGA and Audio cables**

- Includes Cable Bay(s) and a mix of 10' HDMI Cables, and 12' VGA+ Audio Cables.

2C

4C

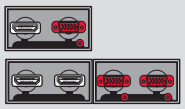

**H HDMI Cables Only**

- Includes Cable Bay(s) and a number of 10' HDMI Cables.

2H

4H

**V VGA+Audio Cables Only**

- Includes Cable Bay(s) and a number of 12' VGA+Audio Cables.

2V

4V

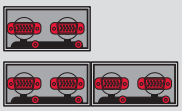

## Switching Interface Module – Dimensions and Cutout Sizes

### 4-Port / Wide / Switching – Interface Module

**Top View – Door Closed and Open**

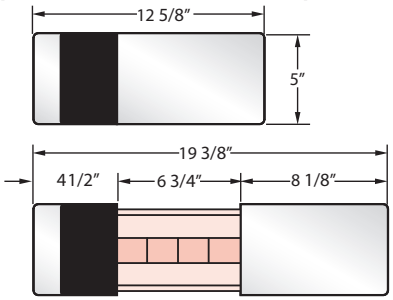


**Side View – Slider Open**

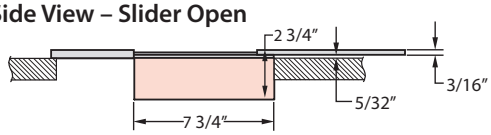


**Top View – Table Cutout Size**

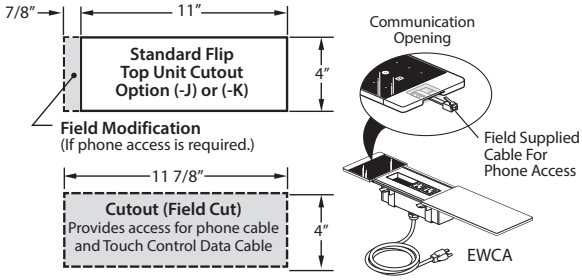


**Specifying Cutouts**

- 4-Port / Wide / Switching – Interface Module may be installed on tables specified with the standard Flip Top Unit cutout options (-J) or (-K). These options provides access for the Touch Control Data Cable but do not provide access for the communication opening to run a phone cable.
- If access to the communication opening is required to run a phone cable, then the standard flip top unit cut-out option (-J) or (-K) must be field modified to accommodate it. The table top will be defaced.
- Tables that can't be specified with standard fliptop unit cut-outs will have to be field cut. The table top will be defaced.

### 6-Port / Wide / Switching – Interface Module

**Top View – Door Closed and Open**

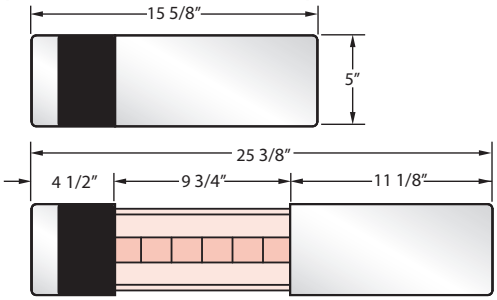


**Side View – Slider Open**

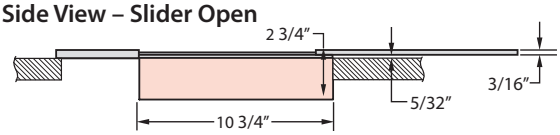


**Top View – Table Cutout Size**

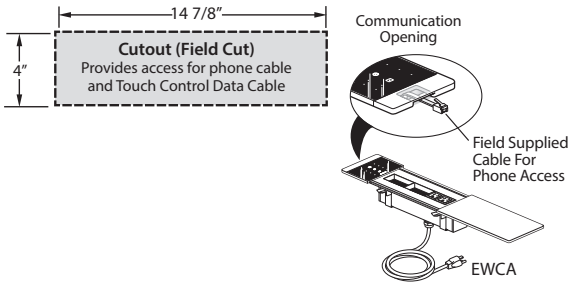


**Specifying Cutouts**

- Cutouts for the 6-Port / Wide / Switching – Interface Modules must be field cut (standard fliptop unit cutouts options are not wide enough). The table top will be defaced.

### 4-Port / Narrow / Switching – Interface Module

**Top View – Door Closed and Open**

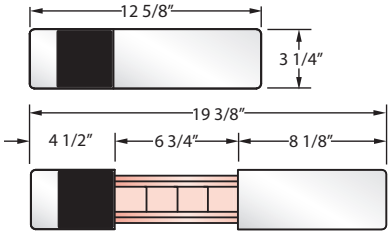


**Side View – Door Open**

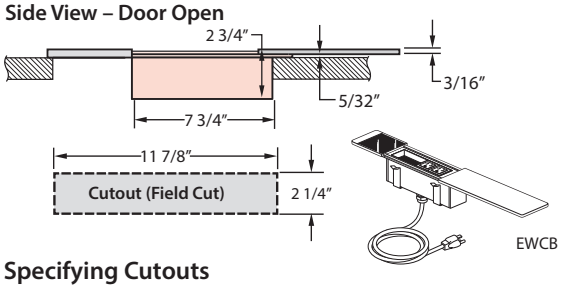


**Specifying Cutouts**

- Cutouts for the 4-Port / Narrow / Switching – Interface Modules must be field cut (standard fliptop unit cutouts options are too wide). The Table top will be defaced.

### 6-Port / Narrow / Switching – Interface Module

**Top View – Door Closed and Open**

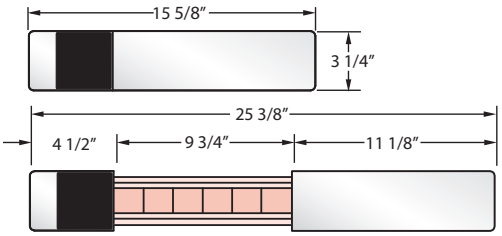


**Side View – Slider Open**

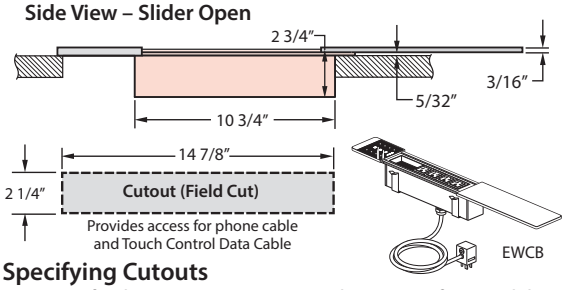


**Specifying Cutouts**

- Cutouts for the 6-Port / Narrow / Switching – Interface Modules must be field cut (standard fliptop unit cutouts options are too wide). The table top will be defaced.

## Interface Module – Switching – Touch Control Details and Operation

The Touch Control is the physical display interface that allows you to operate the workware connect system. Users can use the touch control to turn the system on and off, set the presentation modes (cabled, wireless or video conferencing modes) and control switching between cabled presenters.

- Each Switching Interface Module supports a maximum of four cabled users per Interface Module.
- The Touch Control screen is black polycarbonate with illuminated touch sensitive controls.
- The Touch Control is only included with the Switching version of the Interface Module.

### Touch Control Display Interface Buttons

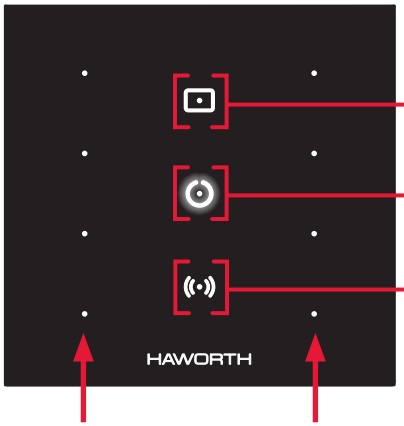


**Video Conferencing Mode Button**
Switches the display to the video conferencing mode for presentation of content from the video conferencing equipment (field supplied).

**Power Button**
Turns the system and external monitors on and off.

**Wireless Mode Button**
Switches display to the wireless mode for presentations by wireless users (Wireless Module is separately specified).

### Touch Control – Illumination Levels

**Illuminated**
(On/Presenting)

**Dimmed**
(Standby/connected)

**Unilluminated**
(off/not connected/ non-functional)

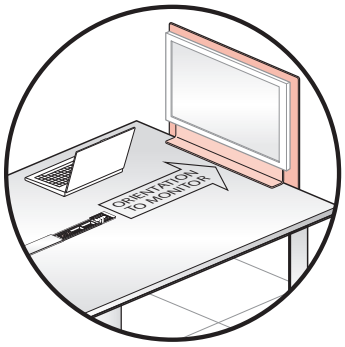


Note **workware connect Interface Module should be oriented with the touch control interface pointed toward the monitor.**

### Left Column Cable User Dots:

- **Single Monitor Application –** Dots control which user's audio/video cables are presenting on the monitor.
- **Dual Monitor Application –** Dots control which user's audio/video cables are presenting on the left monitor only.

### Right Column Cable User Dots:

- **Single Monitor Application –** Dots are non-functional in single monitor applications.
- **Dual Monitor Application –** Dots control which user's audio/video cable are presenting on the right monitor only.

### Button Operation For Applications With Two User Cables

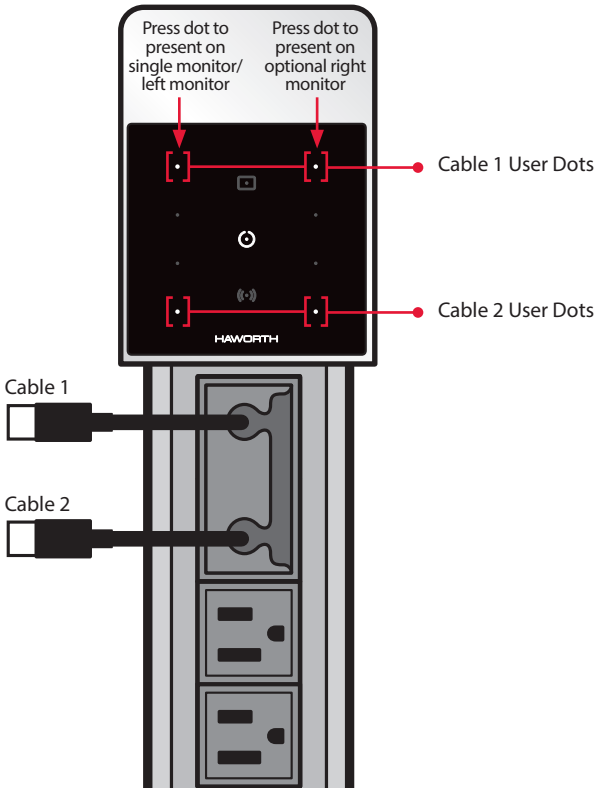


### Button Operation For Applications With Four User Cables

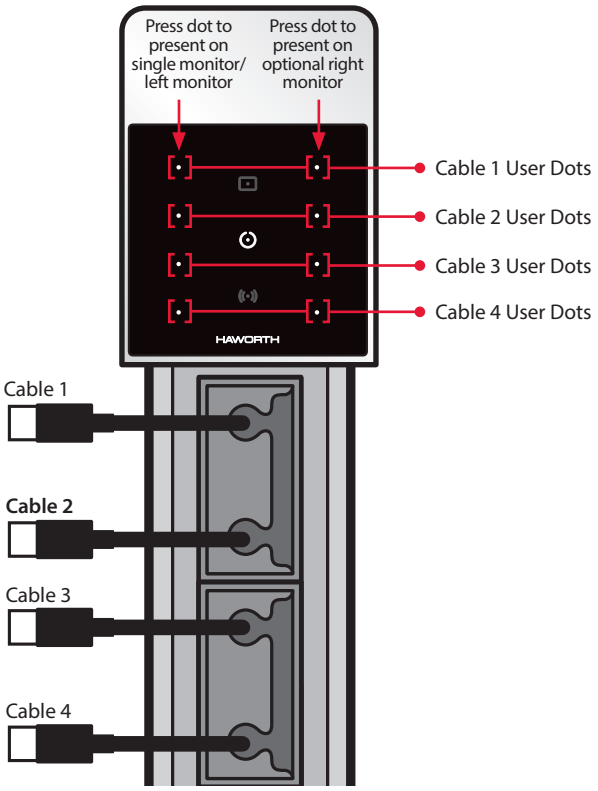

# Product Details – workware connect Interface Module – Switching

## Processor (included with Switching Interface Module)

- The Processor is the central core (brain) of workware, it controls switching between presentation modes and between cabled presenters and power switching.
- The Processor is included only with Switching version of the Interface Module.
- The processor is typically mounted beneath a table surface inside a cable base.
- Separately specified Processor Bracket is available as an alternate mounting solution.

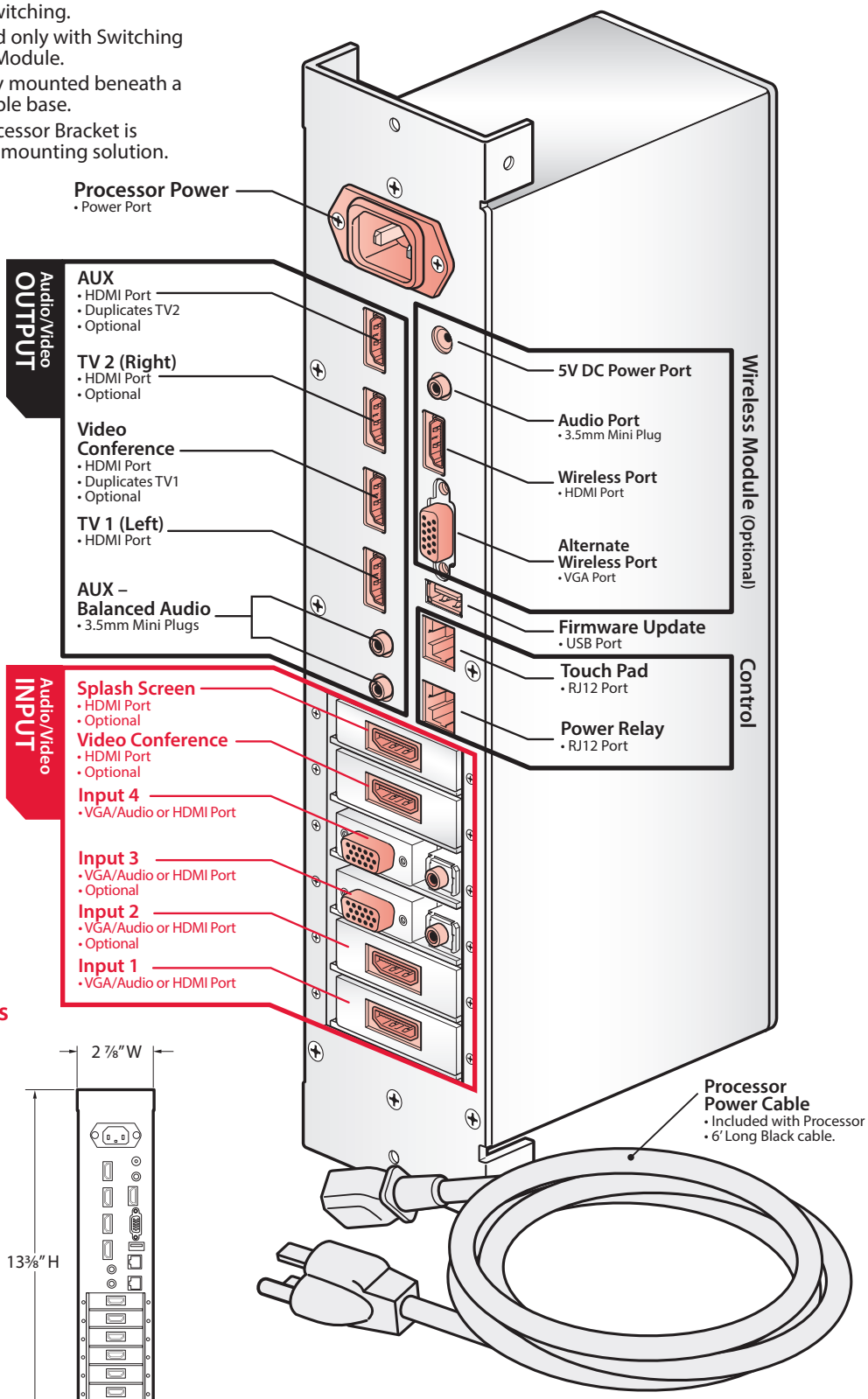


## Processor Dimensions

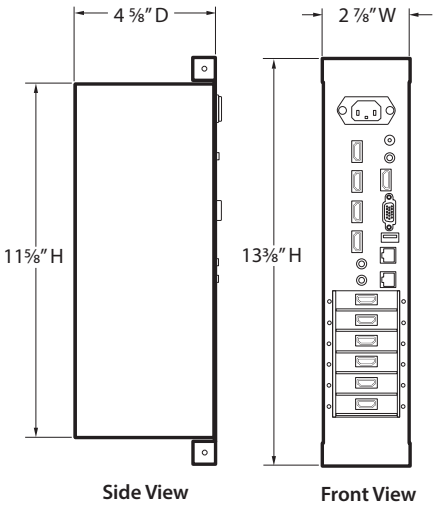


**CAUTION**

- Active HDMI or Directional HDMI cables will cause damage to workware components and should not be used.

## Power Relay Cord and components (Included With Switching Interface Module)

- The Power Relay Cord is a power switch that controls power to the external monitors allowing them to be turned on and off (Included with the Switching Interface Module).
- Users can control the power to the external monitors by pressing the power button on the Interface Module Touch Control (only available with the Switching Interface Module).
- The Power Relay Adapter Cable B functions as a splitter so the Power Relay Cord can control power to two external monitors (optional).

### Power Relay Cord and Components
**(Included with the Switching Interface Module):**

**A Power Relay Box Components** –

- **A1 Power Relay Box** – A switch that controls power to the monitor to turn it on and off.
- **A2 Power Relay Data Cable** (6′ long - black) – Sends data from the Processor to the Power Relay Box to switch attached monitor(s) on and off.
- **A3 Power Relay Power Cord** (6′ long - black) – Cord that connects the building power to the Power Relay Box.
- **A4 Power Relay Splitter Cord** (2′ long - black) – Power Cord/Splitter that attaches the Power Relay Box to the Monitor power cord(s).

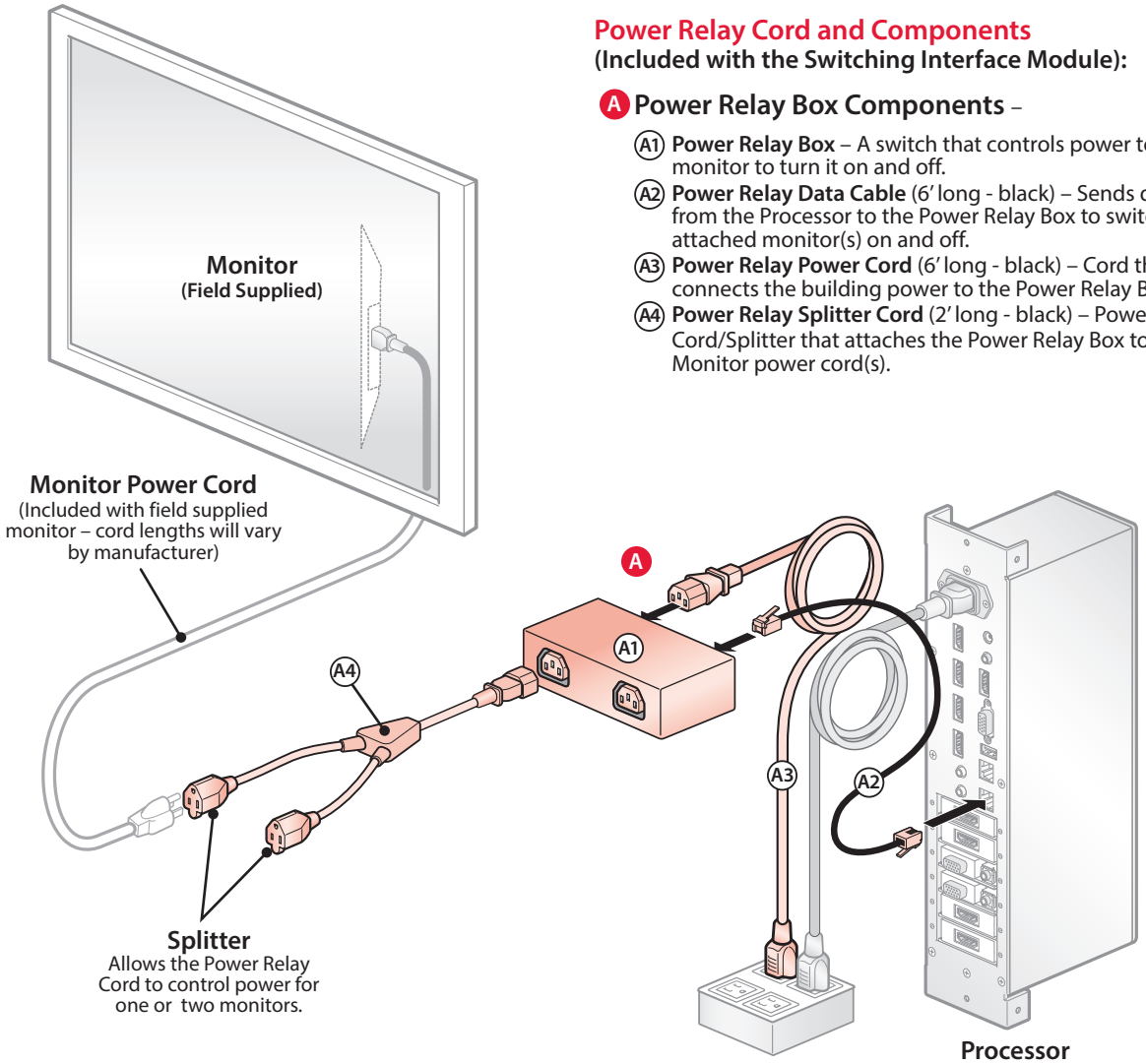


### Power Relay Cord Dimensions

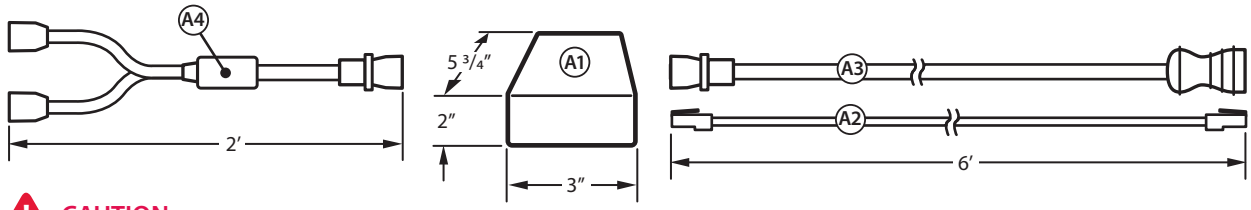


**CAUTION**

- Do not use Power Relay with projectors, to allow proper cool down cycle for projector lamp.

Note

- **Applications that place the Power Relay Data Cable farther than 6′ away from the processor will require that the standard 6′ Power Relay Data Cable be replaced with a longer, separately specified Power Relay Data Cable (EWCX-_ _01-PR). The replacement Data Cable must be specified with sufficient length to reach from the Processor to the Power Relay Box location.**
- **Applications where the monitor power cord is too short to reach the end of the Power Relay Splitter Cord may require an extension cord (16/3 wire gauge, 10A listed, 3 prong plug [NEMA-5-15P] or larger only) to reach the end of the Power Relay Splitter Cord.**

# Product Details – workware connect

## workware Wireless Base and Pro

Separately specify workware Wireless to facilitate wireless sharing applications.

- Available with two levels of functionality:
  - **BASE** - Provides all basic workware Wireless features.
  - **PRO** - Provides all basic workware Wireless features plus additional advanced functionality.
- Both models include a 1 Year Maintenance Agreement, to get automatic upgrades to firmware and software.

**workware Wireless Applications:**

- Wireless Sharing
- Wireless Sharing with Cable Backup

### Base vs. Pro – Feature Comparison

| Features: | BASE EWCM-S100 | PRO EWCM-S600 |
|---|---|---|
| **Simultaneous Users** | 10* | Unlimited* |
| **Simultaneous Content** | 4* | Unlimited* |
| **1080p Display Resolution** | ✓ | ✓ |
| **Displays Around You and Recently Used** | ✓ | ✓ |
| **Windows & Mac Compatibility** | ✓ | ✓ |
| – Screen Sharing | ✓ | ✓ |
| – App Window Sharing | | ✓ |
| – Media File Sharing | | ✓ |
| **iOS & Android Compatibility** | ✓ | ✓ |
| – Screen Sharing (Android 5.0+ Only) | ✓ | ✓ |
| – Media File Sharing | ✓ | ✓ |
| – Camera Sharing | ✓ | ✓ |
| – Web View Sharing (Android 4.4 and lower) | ✓ | ✓ |
| **Content Arrangement Control** | ✓ | ✓ |
| **Remote Control & Viewing** | ✓ | ✓ |
| **Upgrades over network** | ✓ | ✓ |
| **Security Key Control Access** | ✓ | ✓ |
| **Enterprise Level Security** | ✓ | ✓ |
| **Dedicated Setup Support** | ✓ | ✓ |
| **Optional Software Maintenance Extension Agreement** | ✓ | ✓ |
| **HD Remote Viewing** | | ✓ |
| **Moderator Control** | | ✓ |

**The amount of simultaneous users/content is limited to the bandwidth capabilities of the network.*

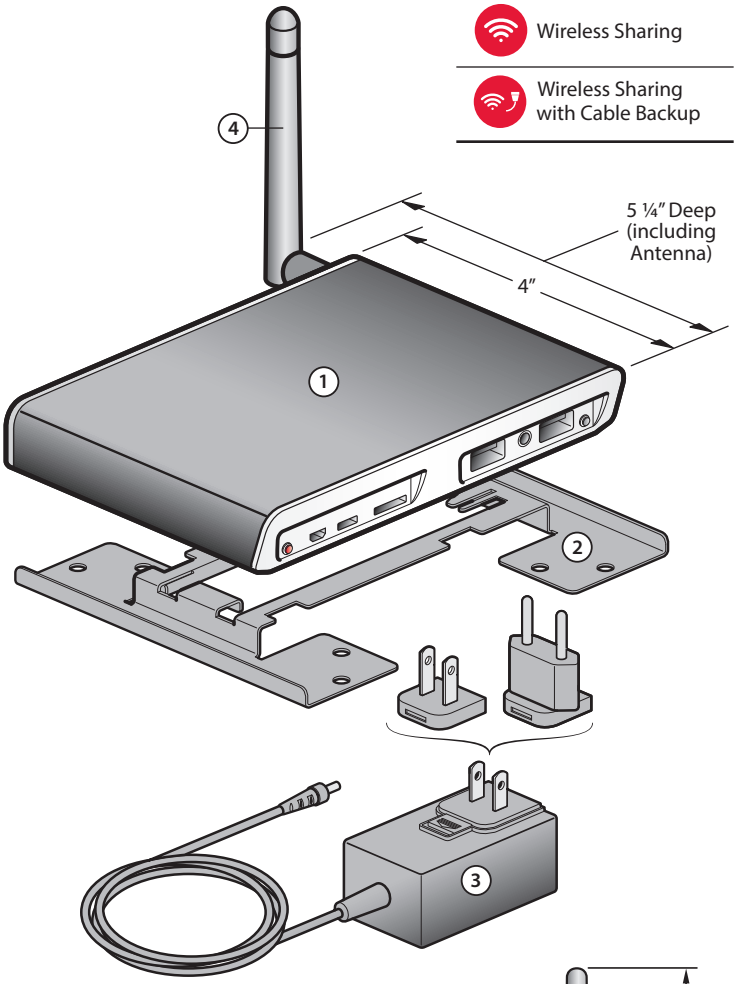


### workware Wireless Components:

1. **Wireless Module 2.0**
   - Black case with white front/back
2. **Mounting Bracket**
   - Galvanized Steel
3. **Power Supply Cord**
   - 4' long Cord – Black
   - Includes Plug Adapters
4. **Antenna**
5. **Power LED**
6. **Console Port** (Not Used)
7. **USB** (Not Used)
8. **Micro SD** (Not Used)
9. **USB** (Not Used)
10. **Audio In** (Not Used)
11. **USB** (Not Used)
12. **Power Button**
13. **Antenna**
14. **12V DC**
15. **Serial Port** (Not Used)
16. **Line Out S/PDIF** (Not Used)
17. **USB** (Not Used)
18. **USB** (Not Used)
19. **Gigabit Ethernet Port**
    - Connect to LAN
20. **DVI-D** (Secondary)
21. **Gigabit Ethernet Port** (Not Used)
22. **HDMI**
    - Connect to Monitor or Processor input

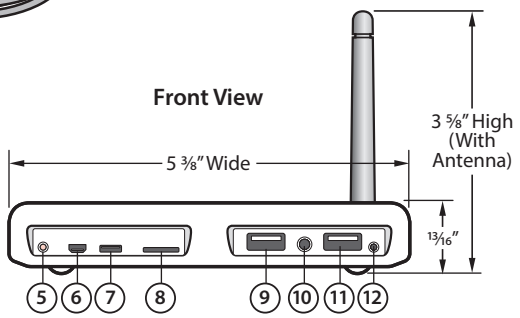


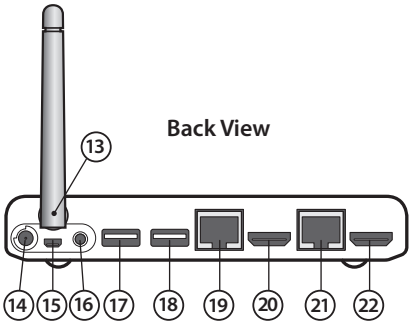


Note
- workware Wireless hardware is the same for Base and Pro, the additional functionality is driven purely by the software. Base units may be upgraded by purchasing the Pro upgrade (See Price List for details).
- If connecting the unit directly to a monitor, an HDMI cable must be separately specified with sufficient length to accommodate the mounting location of the unit (Requires monitor with HDMI Port).

# Product Details – workware connect – Wireless Module

## Wireless Module – Network Configurations

- The standard network configuration for the Wireless Module is for presenters to use the Wireless Presentation Software (WPS) to transmit content from their devices wirelessly to the building network. The Building network will route the presenters content to the Wireless Module that will supply the content to the monitor or the optional Processor.
- The Wireless Module requires a connection to the Building Network to receive content.
- The Wireless Module can be modified for a variety networking configurations, see the workware Technical Manual or consult with your network administrator to determine the best solution for your network.

### Wireless Module – Standard Network Configuration

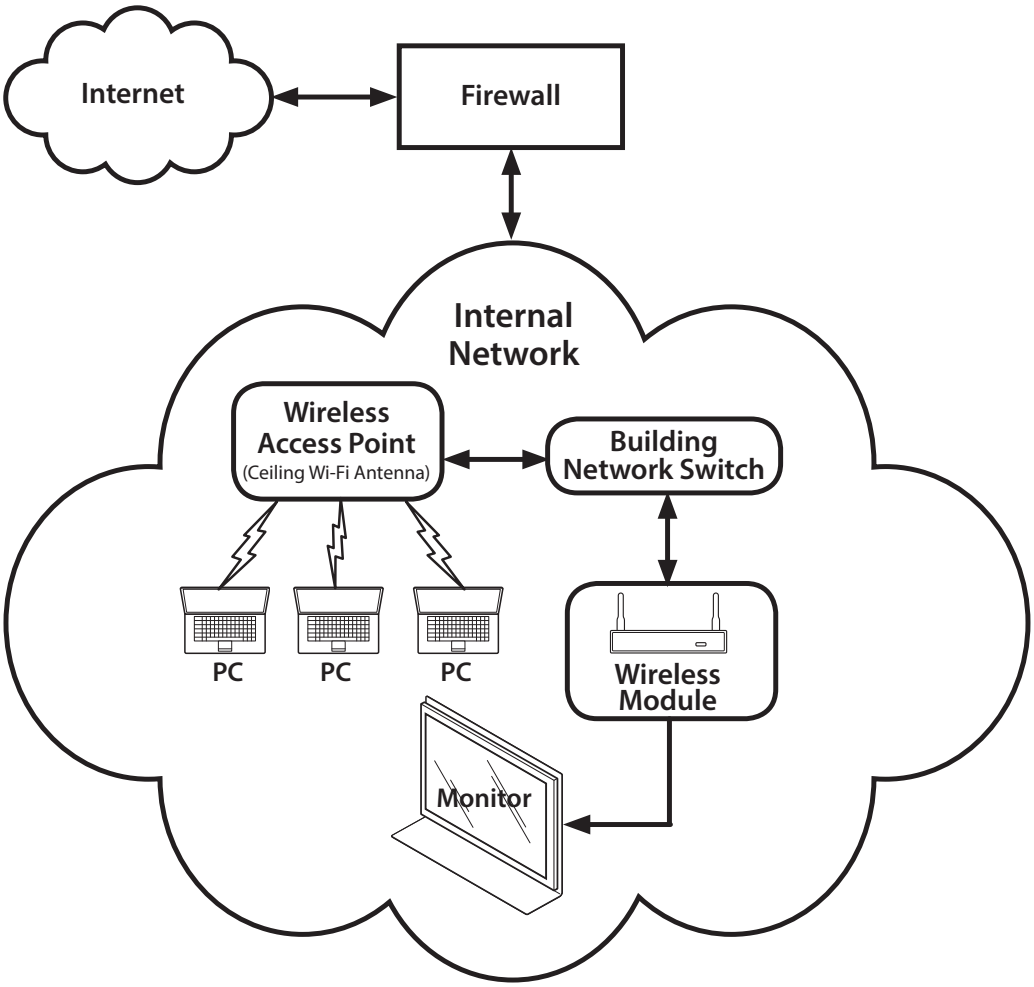


In this configuration, the wireless module is connected to a switch on the organization's internal network. Clients connect to existing access points on the same network, and traffic is routed to the module. No "guest" access is provided – anyone using workware wirelessly must be connected to the organization's internal network.

Note
- The Wireless Module can be modified for a variety networking configurations consult with your network administrator to determine the best solution for your network or see the workware Technical Manual for alternative network configurations.

# Product Details – workware view – Table Mount

## workware view – Table Mount – Single Monitor

- workware view products provides monitor support while integrating the monitor with the workspace.
- Designed to mount on Haworth's Planes Interior Leg Tables, Planes Perimeter Leg Tables (manufactured after October 2013; only) and Reside Tables.
- The Table Mount can be applied to a table without damaging the surface.
- The Front Trim component conceals cables and wires behind the monitor for a very clean aesthetic.
- 1080P LED monitors are highly recommended. All monitors should use the standard VESA® mounting patterns with a central location: 200mm x 200mm - 400mm x 400mm.
- The Table Mounting Bracket will be exposed from the back on units without a shroud; for this reason we recommend placing the back of the Table Mounting Bracket against the wall.
- Separately specified Camera Shelf can be mounted in the center of the Table Mounting Bracket for applications using field supplied video conferencing equipment.

**workware view –**
**Table Mount With Shroud**
EWVT-SA_D-P

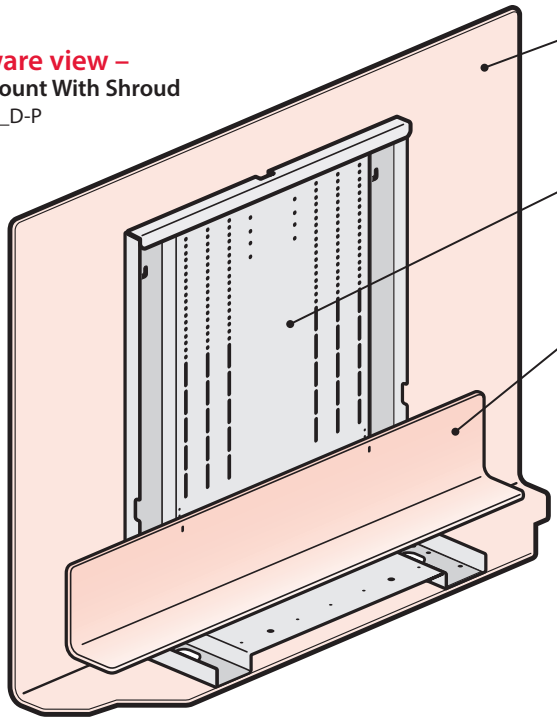

**Shroud**
- Conceals the rear of the monitor to increase the aesthetic appearance of a work environment.
- Trim Color is specified.

**Table Mounting Bracket**
- Mounts the unit on a table and supports monitor in viewing position.
- Standard in black.

**Front Trim**
- Hides cables and wires behind the monitor for a very clean aesthetic.
- Trim Color is specified (same as shroud).

**Exploded View**

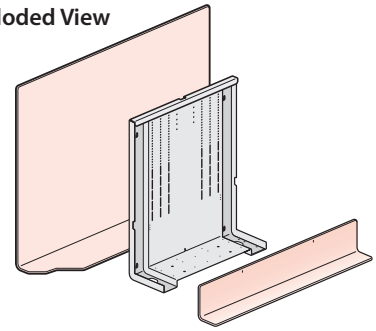

**workware view –**
**Table Mount Without Shroud**
EWVT-S_ND-P

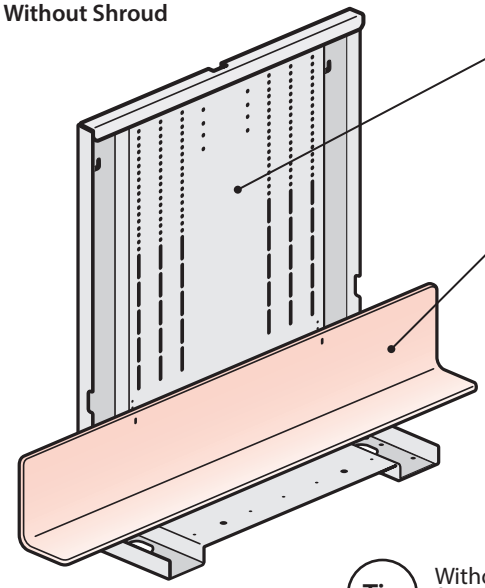

**Table Mounting Bracket**
- Mounts the unit on a table and supports monitor in viewing position.
- Standard in black.

**Front Trim**
- Hides cables and wires behind the monitor for a very clean aesthetic.
- Color is specified.

**Exploded View**

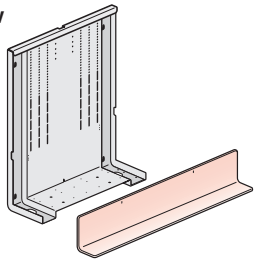

**Tip** Without the shroud the Monitor Mount Bracket is exposed from the back; for this reason we recommend placing the back of the Monitor Mount Bracket against the wall.

# Product Details – workware view – Table Mount

## workware view – Table Mount – Dual Monitor

- workware view products provides monitor support while integrating the monitor with the workspace.
- Designed to mount on Haworth's Planes Interior Leg Tables, Planes Perimeter Leg Tables (manufactured after October 2013; only) and Reside Tables.
- The Table Mount units can be applied to a table without damaging the surface.
- The Front Trim hides cables and wires behind the monitor for a clean aesthetic.
- The dual monitor – table mount workware view accommodates two 32" Monitors (1080P LED monitors are highly recommended) weighing up to 35 pounds each. All monitors should use the standard VESA® mounting patterns with a central location: 100mm x 100mm - 300mm x 300mm.
- Table Mounted units are available with or without shrouds.
- The Table Mounting Bracket will be exposed from the back on units without a shroud; for this reason we recommend placing the back of the Table Mounting Bracket against the wall.
- Separately specified Camera Shelf can be mounted in the center of the Table Mounting Bracket for applications using field supplied video conferencing equipment.

**workware view –**
**Table Mount With Shroud – Dual Monitor**
EWVT-DCSD-P

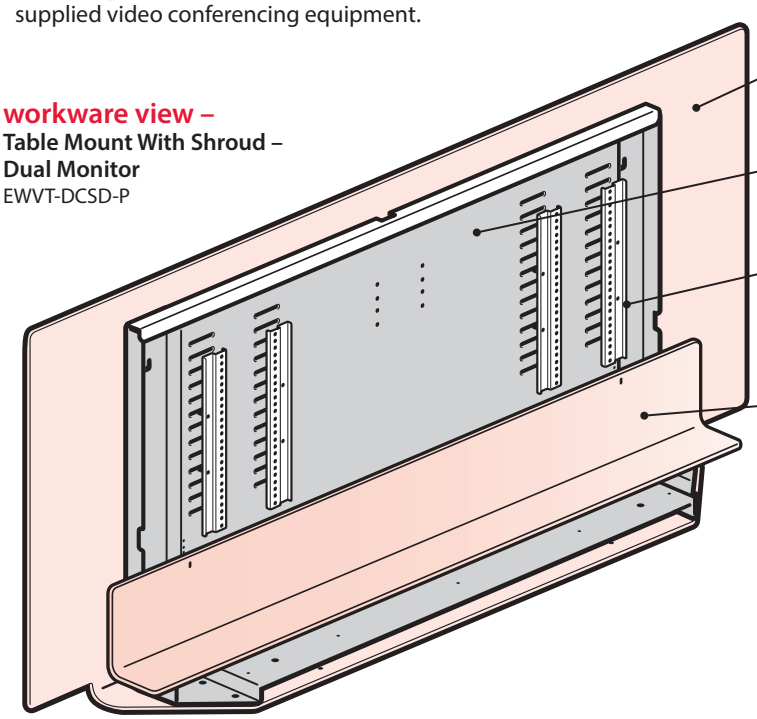

**Shroud**
- Conceals the rear of the monitor to increase the aesthetic appearance of a work environment.
- Color is specified trim color.

**Table Mounting Bracket**
- Mounts the unit on a table and supports monitor in viewing position.
- Standard in black.

**Monitor Mounting Brackets**
- Brackets that are attached to the back of a monitor to allow it to be mounted in operating position on the Table Mounting Bracket.
- Color is standard in black.

**Front Trim**
- Hides cables and wires behind the monitor for a very clean aesthetic.
- Color is specified trim color.

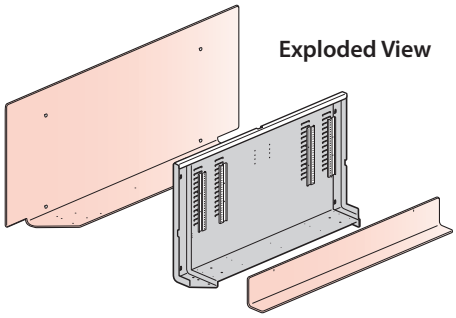

**Exploded View**

**workware view –**
**Table Mount Without Shroud**
EWVT-DCND-P

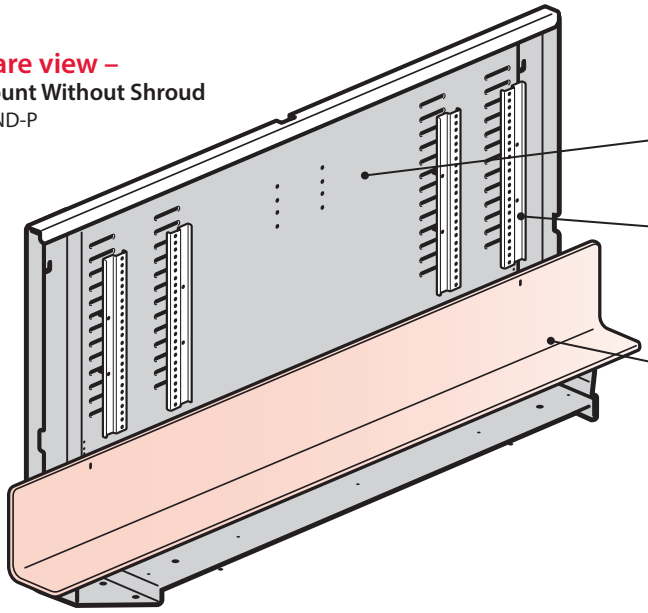

**Table Mounting Bracket**
- Mounts the unit on a table and supports monitor in viewing position.
- Standard in black.

**Monitor Mounting Brackets**
- Brackets that are attached to the back of a monitor to allow it to be mounted in operating position on the Table Mounting Bracket.
- Color is standard in black.

**Front Trim**
- Hides cables and wires behind the monitor for a very clean aesthetic.
- Color is specified.
- Color is specified trim color.

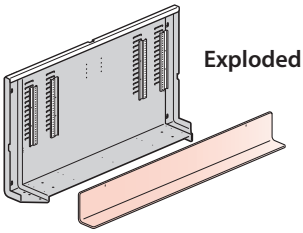

**Exploded View**

**Tip** Without the shroud the Table Mounting Bracket is exposed from the back; for this reason we recommend placing the back of the Table Mounting Bracket against the wall.

# Product Details – workware view – Table Mount

## Dimensions – workware view Table Mount with shroud – Single Monitor

### 40-42 Inch Monitors – EWVT-SASD-P

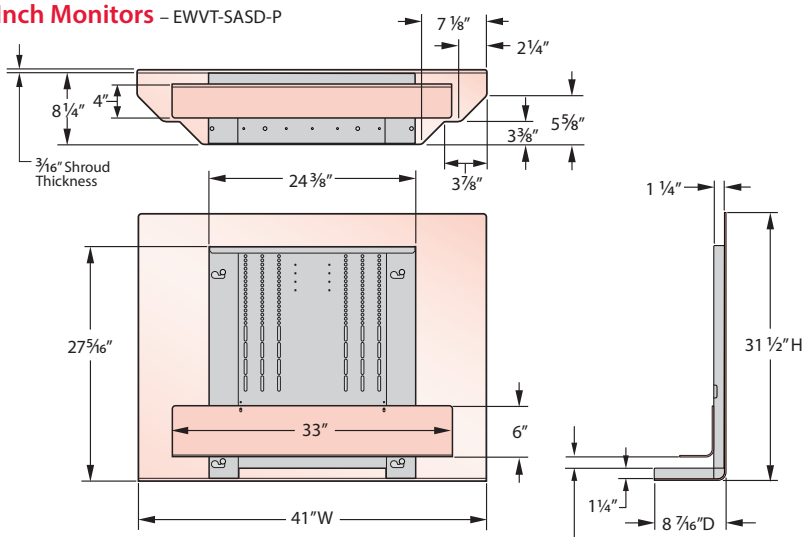


workware view – Single Monitor Table Mount With Shroud

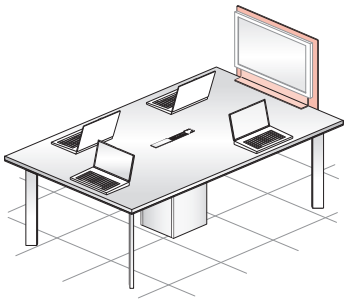

### 46-47 Inch Monitors – EWVT-SBSD-P

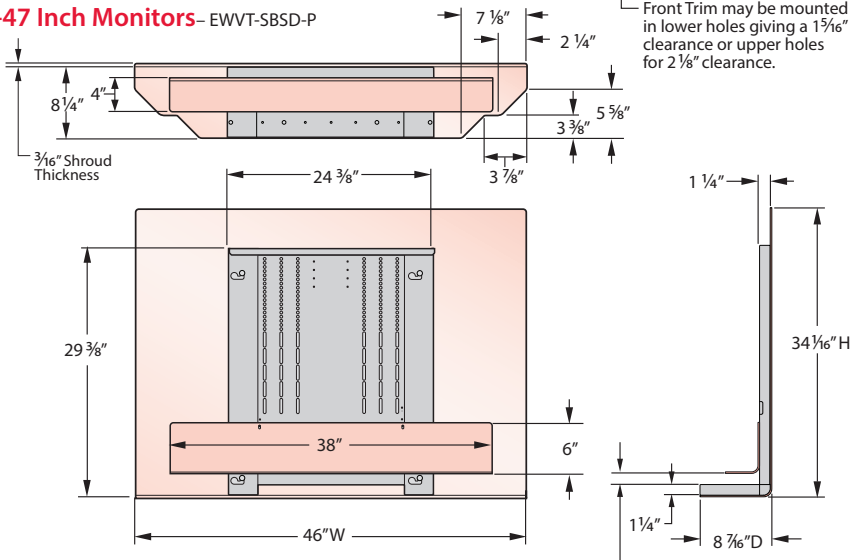


### 52-55 Inch Monitors – EWVT-SCSD-P

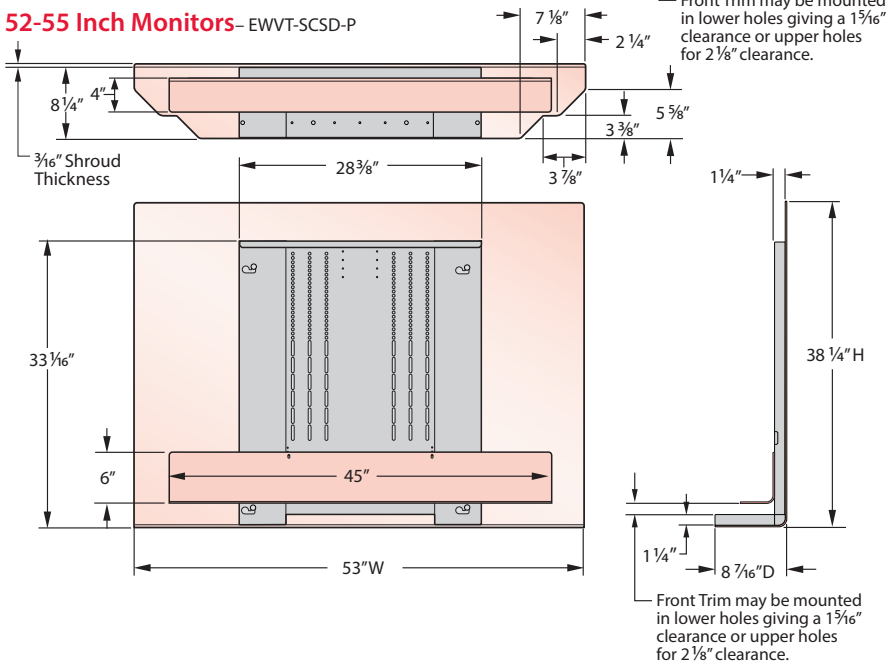

# Product Details – workware view – Table Mount

## Table Mount Without Shroud – Dimensions

### 40-42 Inch Monitors– EWVT-SAND-P

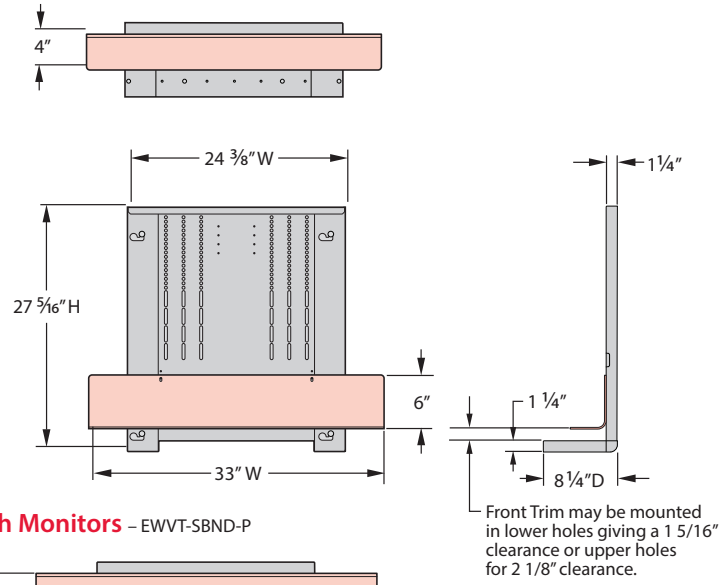


workware view – Single Monitor Table Mount Without Shroud

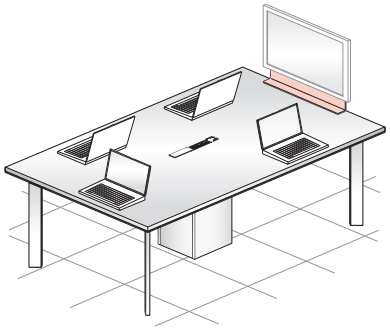

### 46-47 Inch Monitors – EWVT-SBND-P

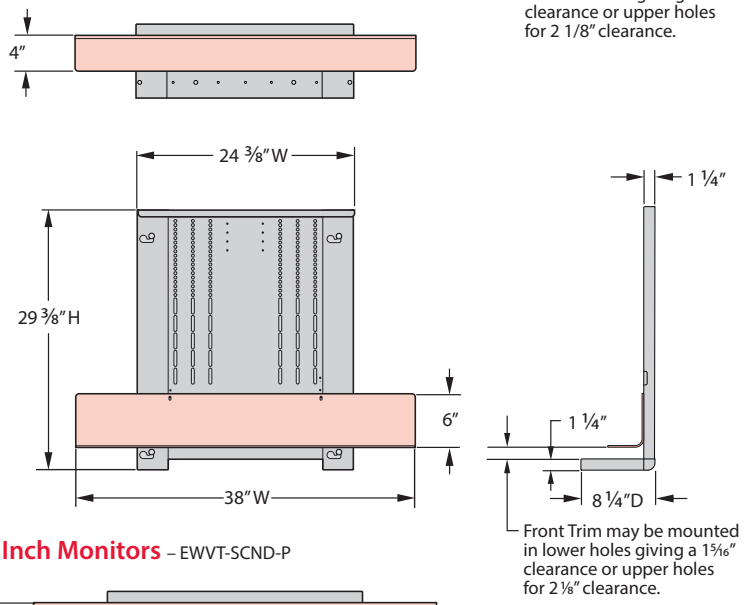


### 52-55 Inch Monitors – EWVT-SCND-P

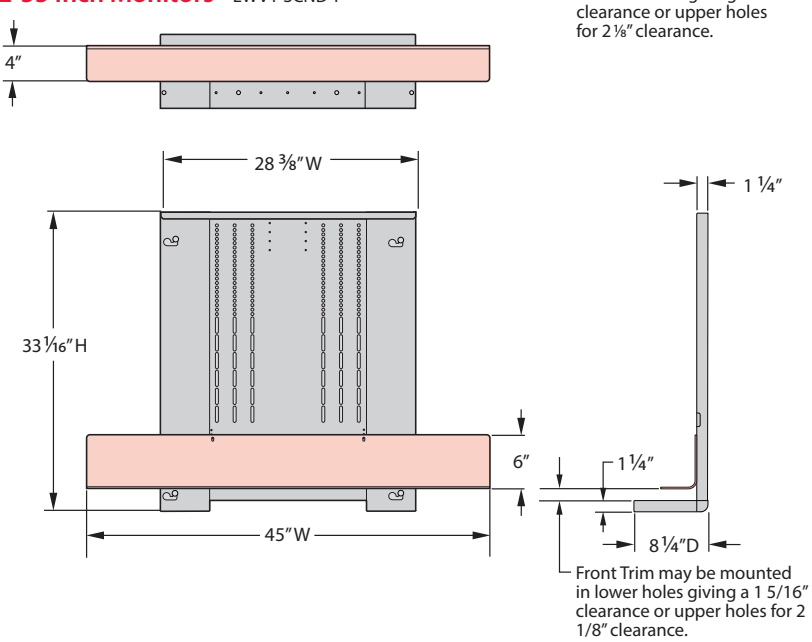

# Product Details – workware view – Table Mount

## Dimensions – workware view – Table Mount with Dual Monitors

### 32″ Dual Monitors – With Shroud

EWVT-DCSD-P

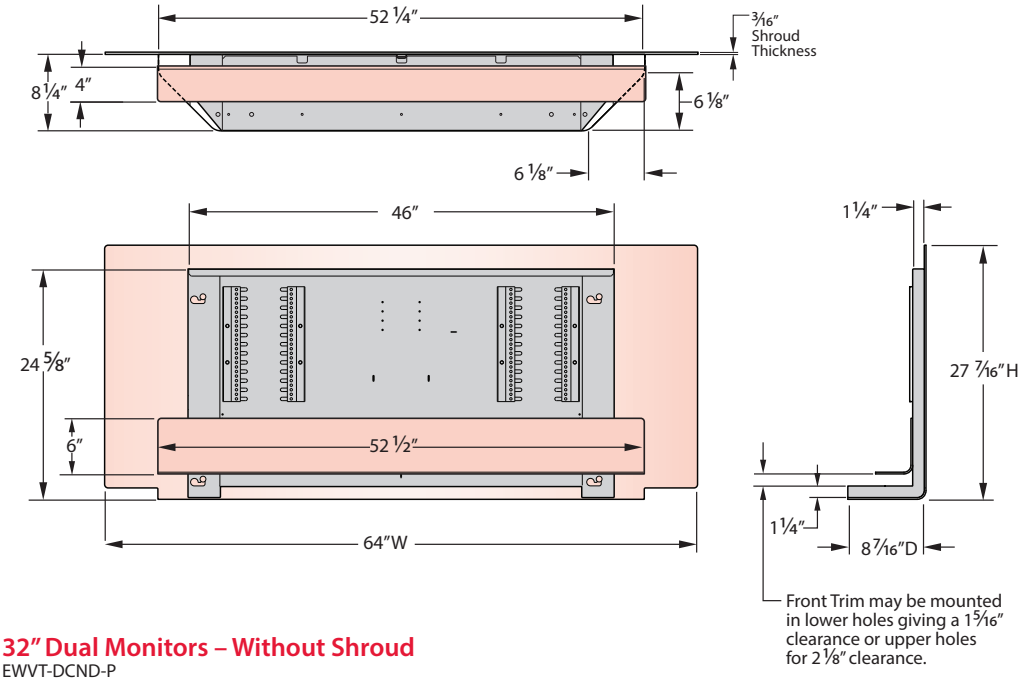


### 32″ Dual Monitors – Without Shroud

EWVT-DCND-P

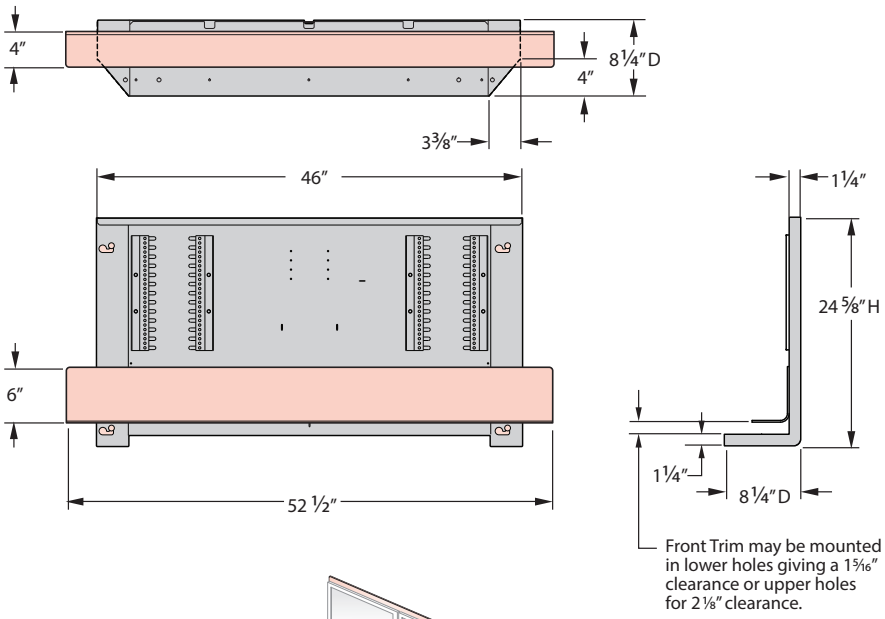


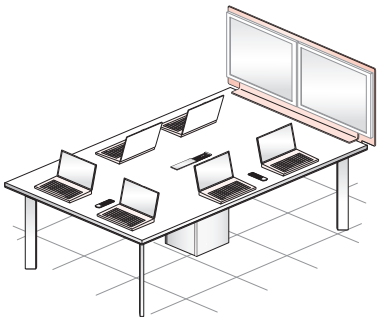

**workware view – Dual Monitor Table Mount With Shroud**

# Product Details – workware view – Table Mount

## Monitor Considerations – Single Monitor

- LED 1080P monitors are highly recommended and should be equipped with either an HDMI or VGA+Audio connections depending on the application. Some applications may also require a remote control to control monitor power.
- Table mounted units are designed to accommodate most brands of monitors with centrally located VESA® mounting patterns with widths between 200 mm-400 mm and heights between 200 mm-400 mm.
- The monitor and any other mounted equipment such as video conferencing camera may not exceed the table mounted units 70lbs. maximum load capacity.
- The Monitor can be adjusted vertically in ½" increments.

Back of typical 40"-42"Monitor

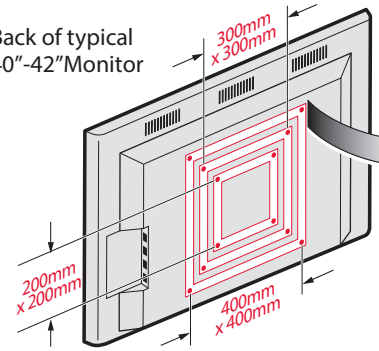


### workware view – Table Mount – 40"-42" Monitor

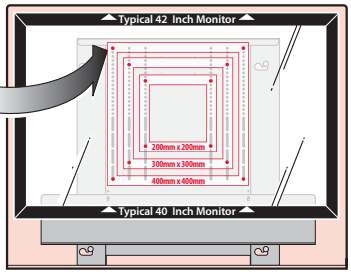


**Accommodates VESA® Hole Patterns:**
- 200mm x 200mm
- 300mm x 300mm
- 400mm x 400mm

**Load Capacity: 70 lbs. Maximum**
(includes weight of monitor and any other mounted equipment such as a video conferencing camera)

**Monitor Size Requirements**

| | Minimum | Maximum |
|---|---|---|
| Width | 34" | 40" |
| Height | 20.5" (1 3⁄16" Thick Table Top)<br>19.6 (2" Thick Table Top) | 27.5" (1 3⁄16" Thick Table Top)<br>26.6" (2" Thick Table Top) |
| Load | – | 70 lbs. |

Back of typical 46"-47"Monitor

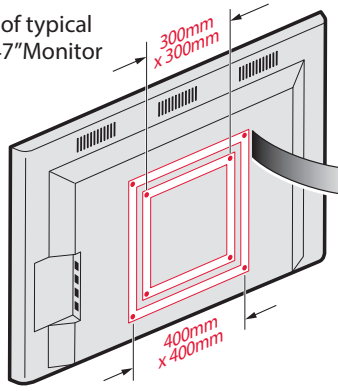


### workware view – Table Mount – 46-47 Inch Monitor

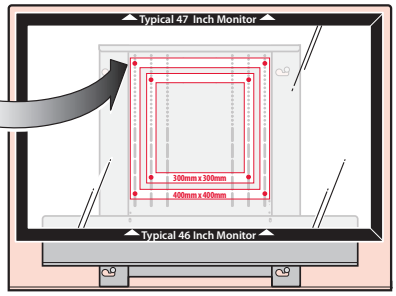


**Accommodates VESA® Hole Patterns:**
- 200mm x 200mm
- 300mm x 300mm
- 400mm x 400mm

**Load Capacity: 70 lbs. Maximum**
(includes weight of monitor and any other mounted equipment such as a video conferencing camera)

**Monitor Size Requirements**

| | Minimum | Maximum |
|---|---|---|
| Width | 39" | 45" |
| Height | 22.4" (1 3⁄16" Thick Table Top)<br>21.5 (2" Thick Table Top) | 30.1" (1 3⁄16" Thick Table Top)<br>29.2 (2" Thick Table Top) |
| Load | – | 70 lbs. |

Back of typical 52"-55" Monitor

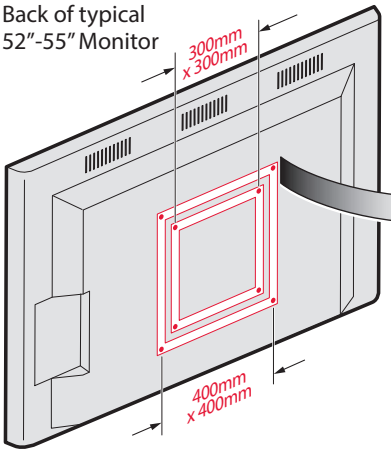


### workware view – Table Mount – 52-55 Inch Monitor

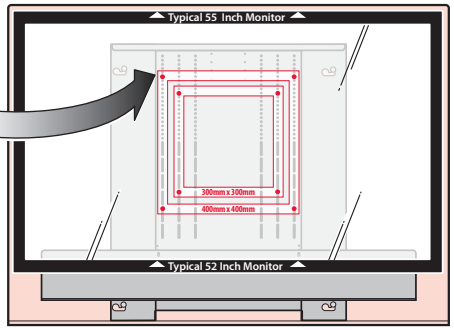


**Accommodates VESA® Hole Patterns:**
- 200mm x 200mm
- 300mm x 300mm
- 400mm x 400mm

**Maximum Load Capacity: 70 lbs. Maximum**
(includes weight of monitor and any other mounted equipment such as a video conferencing camera)

**Monitor Size Requirements**

| | Minimum | Maximum |
|---|---|---|
| Width | 46" | 52" |
| Height | 26.1" (1 3⁄16" Thick Table Top)<br>25.2" (2" Thick Table Top) | 34.3" (1 3⁄16" Thick Table Top)<br>33.4" (2" Thick Table Top) |
| Load | – | 70 lbs. |

# Product Details – workware view – Table Mount

## Monitor Considerations – Dual Monitors

- (2) 32″ 1080P LED Monitor are recommended (see below for size requirements).
- Each monitor must have (1) HDMI connection to connect workware.
- Applications without a Switching Interface Module can control monitor power from the monitor or with a remote control.
- Dual Monitor - Table mounted units are designed to accommodate most brands of monitors with centrally located VESA® mounting patterns (accommodates mounting pattern widths between 100mm-300mm and heights between 100mm-300mm)

### workware view – Table Mount – Dual Monitor

**Monitor Size Requirements**

| | Minimum | Maximum |
|---|---|---|
| Width | 26.7″ | 31.5″ |
| Height | 17.7″ (1 3⁄16″ Thick Table Top)<br>16.8 (2″ Thick Table Top) | 23″ (1 3⁄16″ Thick Table Top)<br>22.1″ (2″ Thick Table Top) |
| Load | – | 70 lbs. |

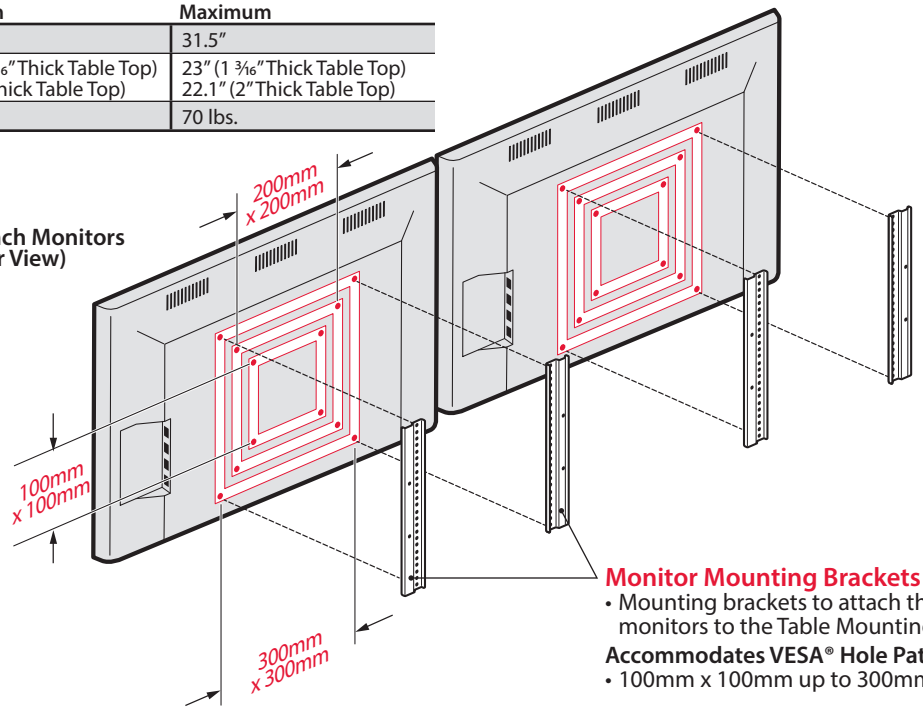


**Monitor Mounting Brackets**
- Mounting brackets to attach the monitors to the Table Mounting Bracket.

**Accommodates VESA® Hole Patterns:**
- 100mm x 100mm up to 300mm x 300mm

### Exploded view of workware view Dual Monitor (Shown with Shroud)

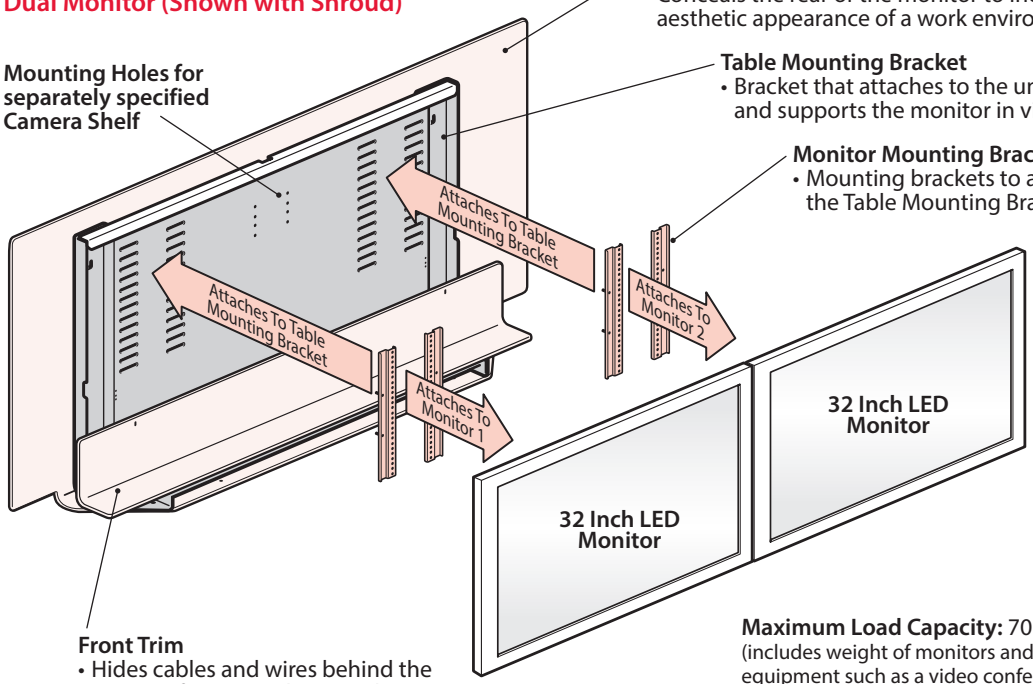


**Shroud**
- Conceals the rear of the monitor to increase the aesthetic appearance of a work environment.

**Table Mounting Bracket**
- Bracket that attaches to the unit to the table and supports the monitor in viewing position.

**Monitor Mounting Brackets**
- Mounting brackets to attach the monitors to the Table Mounting Bracket.

**Mounting Holes for separately specified Camera Shelf**

**Front Trim**
- Hides cables and wires behind the monitor for a very clean aesthetic.

**Maximum Load Capacity:** 70 lbs. total
(includes weight of monitors and any other mounted equipment such as a video conferencing camera)

# Product Details – workware view – Table Mount

## Table Mounting Guidelines – Tabletop Construction

### Tabletop Construction Guidelines for Table Mounted workware view

- Most solid core tabletops with a minimum thickness 1⅛" and a maximum thickness of 2" may be used with table mounted workware view products
- Table Mounted workware view products should not be mounted to faux thickness edge band tabletops except for Haworth Planes Perimeter Leg Conference Tables manufactured AFTER October 2013.
- Table Mounted workware products should never be mounted to hollow core tabletops.

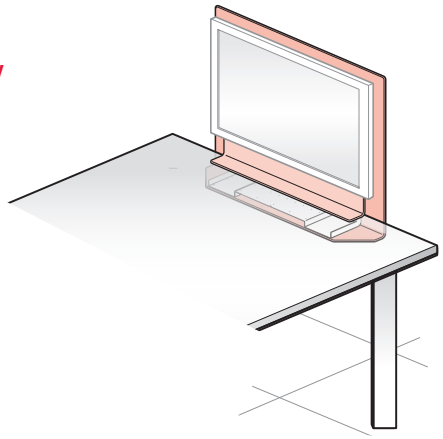

### Solid Core Tabletops

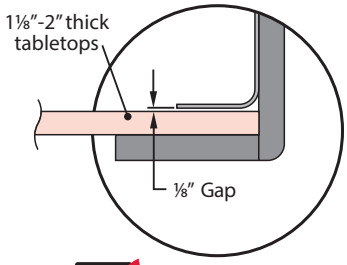


**DO**

- **Do use with Haworth Planes Interior Leg Conference Tables and other 1⅛"-2" thick solid core tabletops.**

**DON'T**

- **Don't use with Solid Core Tabletops less than 1⅛" thick.**
- **Don't use with Solid Core Tabletops more than 2" thick.**

### Faux Thickness Edge Band Tabletops (Built Up Edges)

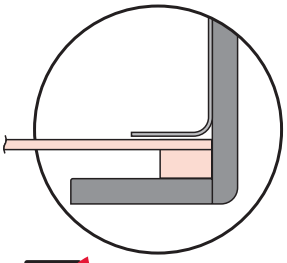

**DO**

- **Do use with Haworth Planes Perimeter Leg Conference Tables manufactured AFTER October 2013.**

**DON'T**

- **Don't use with Haworth Planes Perimeter Leg Conference Tables manufactured BEFORE October 2013.**
- **Don't use with Faux Thickness Edge Bands Table Tops (Built Up Edges) from other Manufacturers.**

### Hollow Core Tabletops

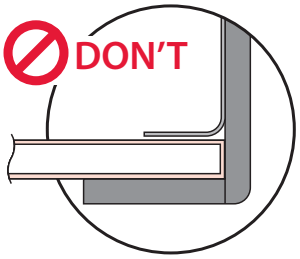


**DON'T**

- **Don't use with hollow core tabletops.**

## Table Mounting Guidelines – Tabletop Edge Profiles

### Edge Profile Guidelines for Table Mounted workware view

- workware view Monitor Mount Bracket is designed with multiple mounting holes to work with a variety of edge profiles.

Note
- Always check for interference between table legs and the Shroud or Monitor Mount.

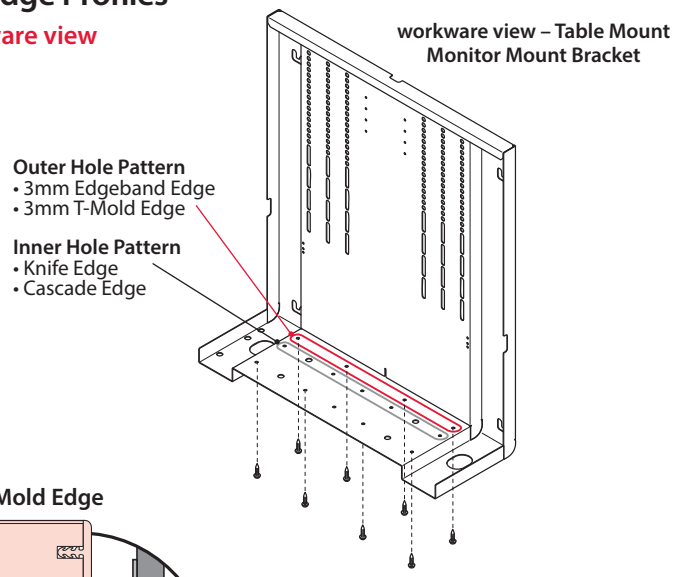


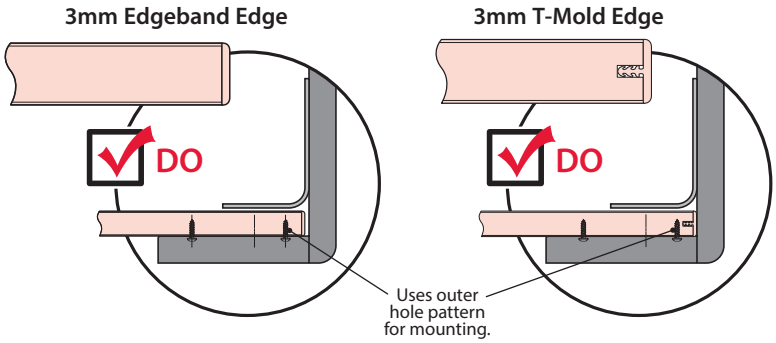


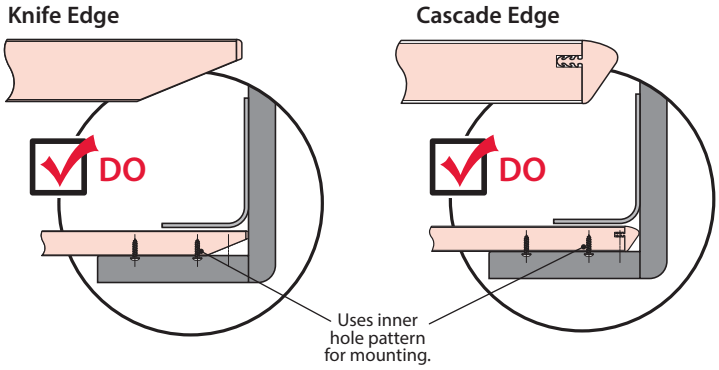

# Product Details – workware view – Table Mount

## Table Mounting Guidelines – Table Shapes

- workware view table mount units mount to the underside of the table and can be applied to a table without damaging the table top surface.
- workware view table mount units are available in a variety sizes to provide monitor support for wide range of monitor sizes.
- The tables must be large enough to accommodate and support the workware view unit and the monitor.

## Recommended Table Shapes

- workware view table mount units may be installed on Haworth's Planes Interior Leg Tables, Planes Perimeter Leg Tables (manufactured after October 2013; only) and Reside Tables (Square or Rectangular only) depending on table size.
- workware view table mount units cannot be properly installed on tables with curved edges.

**DO**

**Do specify workware view table mount units for tables with straight edges.**

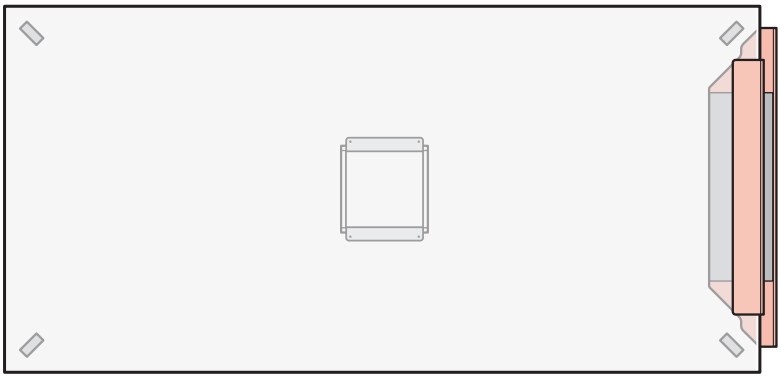

**Top View of Planes Rectangular Interior Leg Conference Table**

Note

- **All Square Tables smaller than 60" x 60" with workware view attached must include a separately specified 14"x14" Cable Base for stability; or the table must be flat bracketed to another table.**
- **For stability issues workware view should only be mounted on the ends of rectangular tables.**

**DON'T**

**Don't specify workware view table mount units for tables with curved edges.**

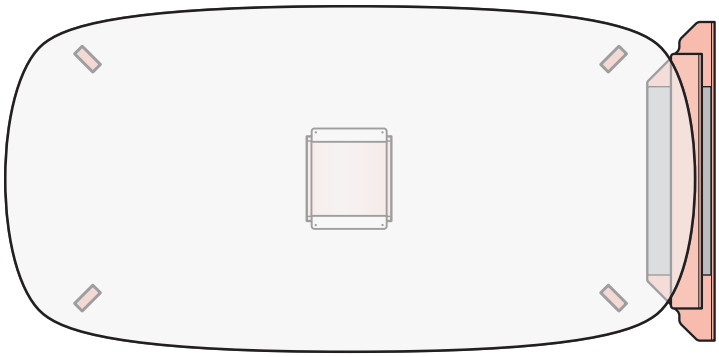

**Top View of Planes Pebble Interior Leg Conference Table**

# Product Details – workware view – Table Mount

## Table Mounting Guidelines – Leg Interference

- workware view – table mount units may only be installed on tables with sufficient clearance to avoid interference between the table legs and the shroud/table mounting brackets.
- When specifying workware view for existing tables be aware of interference issues with table legs and the Shroud and the Table Mounting Bracket (see the workware view table mount – dimensions section for detailed dimensions).

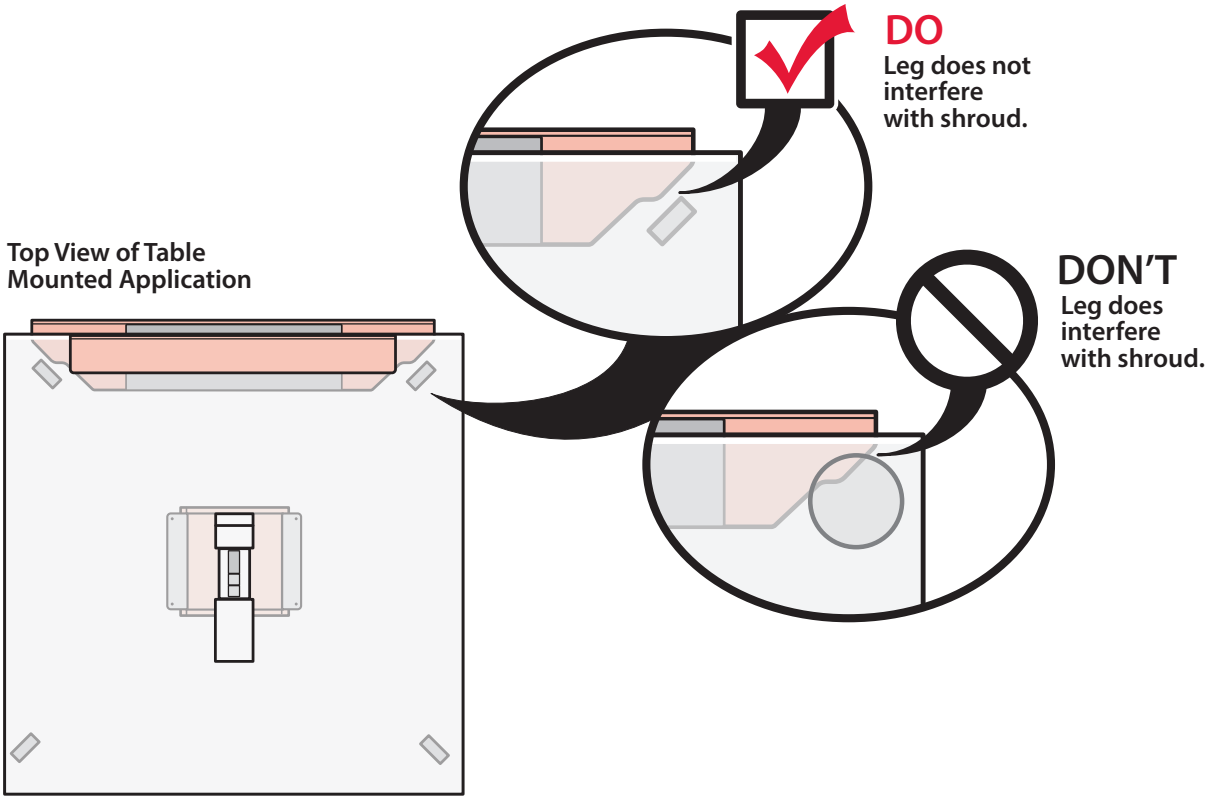


## Dimensions – workware view – Table Mount

### Top View – Single Monitor – With Shroud

EWVT-S_SD-P

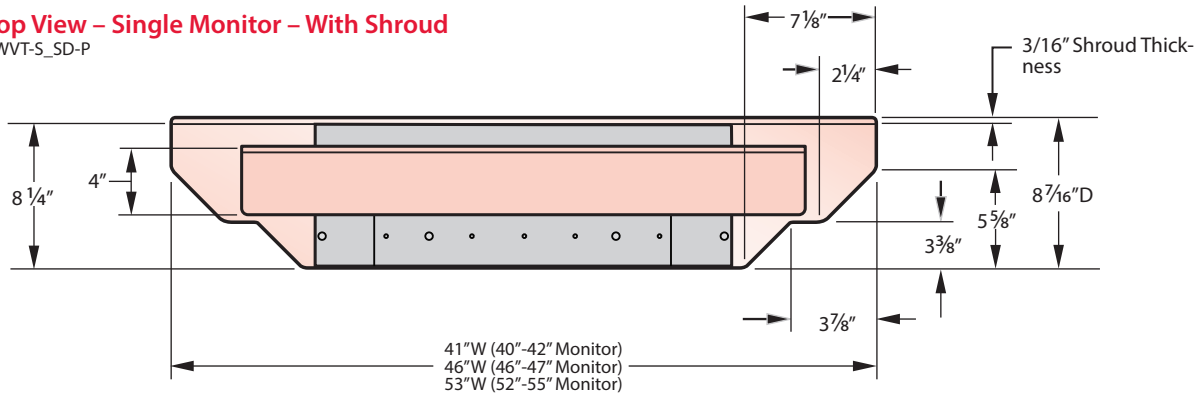


### Top View – Dual Monitors – With Shroud

EWVT-DCSD-P

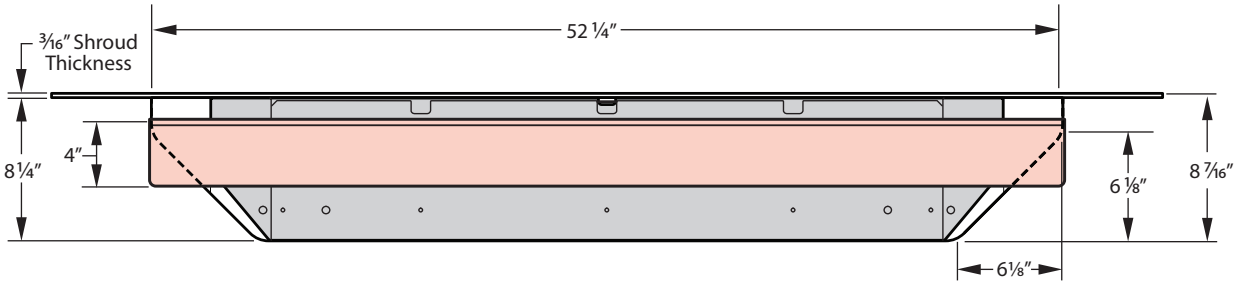

# Product Details – workware view – Table Mount

## Table Mounting Guidelines – Recommended Table Sizes

### Planes Conference Tables – Interior Leg – One-Piece Square

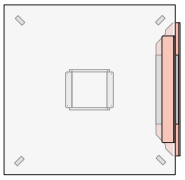

Top View – TARQ - Square Table

| workware view – TABLE MOUNT – SIZES | TABLE SIZES 42" x 42" | 48" x 48" | 54" x 54" | 60" x 60" |
|---|---|---|---|---|
| 40-42" Single Monitors | NO | **YES*** | **YES*** | **YES** |
| 46-47" Single Monitors | NO | NO | **YES*** | **YES** |
| 52-55" Single Monitors | NO | NO | NO | **YES** |
| 32" Dual Monitors | NO | NO | NO | **YES** |

Note • ***All Square Tables smaller than 60" x 60" with workware view attached must include a separately specified 14"x14" Cable Base for stability; or the table must be flat bracketed to another table.**

Tip • **See Planes Specification Guide for occupancy guidelines.**

### Planes Conference Tables – Interior Leg – Two-Piece Square

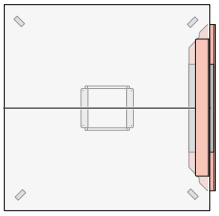

Top View – TARQ - Square Table

| workware view – TABLE MOUNT – SIZES | TABLE SIZES 66" x 66" | 72" x 72" |
|---|---|---|
| 40-42" Single Monitors | **YES** | **YES** |
| 46-47" Table Mount | **YES** | **YES** |
| 52-55" Table Mount | **YES** | **YES** |
| 32" Dual Monitors | **YES** | **YES** |

Tip • **See Planes Specification Guide for occupancy guidelines.**

### Planes Conference Tables – Interior Leg – One-Piece Rectangular

TARA - Rectangular

= Table Size Not Available

| TABLE DEPTHS | workware view – TABLE MOUNT – SIZES | TABLE LENGTHS 48" | 54" | 60" | 66" | 72" | 78" | 84" | 90" | 96" | 102" | 108" | 114" | 120" |
|---|---|---|---|---|---|---|---|---|---|---|---|---|---|---|
| 30" D | 40-42" Single Monitors | | | NO | NO | NO | | | | | | | | |
| | 46-47" Single Monitors | | | NO | NO | NO | | | | | | | | |
| | 52-55" Single Monitors | | | NO | NO | NO | | | | | | | | |
| | 32" Dual Monitors | | | NO | NO | NO | | | | | | | | |
| 36" D | 40-42" Single Monitors | | | NO | NO | NO | NO | NO | NO | NO | | | | |
| | 46-47" Single Monitors | | | NO | NO | NO | NO | NO | NO | NO | | | | |
| | 52-55" Single Monitors | | | NO | NO | NO | NO | NO | NO | NO | | | | |
| | 32" Dual Monitors | | | NO | NO | NO | NO | NO | NO | NO | | | | |
| 42" D | 40-42" Single Monitors | NO | NO | NO | NO | NO | NO | NO | NO | NO | NO | NO | NO | NO |
| | 46-47" Single Monitors | NO | NO | NO | NO | NO | NO | NO | NO | NO | NO | NO | NO | NO |
| | 52-55" Single Monitors | NO | NO | NO | NO | NO | NO | NO | NO | NO | NO | NO | NO | NO |
| | 32" Dual Monitors | NO | NO | NO | NO | NO | NO | NO | NO | NO | NO | NO | NO | NO |
| 48" D | 40-42" Single Monitors | | **YES** | **YES** | **YES** | **YES** | **YES** | **YES** | **YES** | **YES** | **YES** | **YES** | **YES** | **YES** |
| | 46-47" Single Monitors | | NO | NO | NO | NO | NO | NO | NO | NO | NO | NO | NO | NO |
| | 52-55" Single Monitors | | NO | NO | NO | NO | NO | NO | NO | NO | NO | NO | NO | NO |
| | 32" Dual Monitors | | NO | NO | NO | NO | NO | NO | NO | NO | NO | NO | NO | NO |
| 54" D | 40-42" Single Monitors | | | **YES** | **YES** | **YES** | **YES** | **YES** | **YES** | **YES** | **YES** | **YES** | **YES** | **YES** |
| | 46-47" Single Monitors | | | **YES** | **YES** | **YES** | **YES** | **YES** | **YES** | **YES** | **YES** | **YES** | **YES** | **YES** |
| | 52-55" Single Monitors | | | NO | NO | NO | NO | NO | NO | NO | NO | NO | NO | NO |
| | 32" Dual Monitors | | | NO | NO | NO | NO | NO | NO | NO | NO | NO | NO | NO |
| 60" D | 40-42" Single Monitors | | | | **YES** | **YES** | **YES** | **YES** | **YES** | **YES** | **YES** | **YES** | **YES** | **YES** |
| | 46-47" Single Monitors | | | | **YES** | **YES** | **YES** | **YES** | **YES** | **YES** | **YES** | **YES** | **YES** | **YES** |
| | 52-55" Single Monitors | | | | **YES** | **YES** | **YES** | **YES** | **YES** | **YES** | **YES** | **YES** | **YES** | **YES** |
| | 32" Dual Monitors | | | | **YES** | **YES** | **YES** | **YES** | **YES** | **YES** | **YES** | **YES** | **YES** | **YES** |

Tip • **See Planes Specification Guide for occupancy guidelines.**

# Product Details – workware view – Table Mount

## Table Mounting Guidelines – Recommended Table Sizes

### Planes Conference Tables – Interior Leg – Two-Piece Rectangular

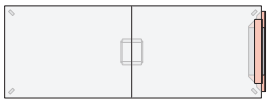

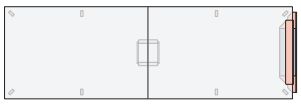

TARA - Rectangular Table

| TABLE DEPTHS | workware view – TABLE MOUNT – SIZES | TABLE LENGTHS 126" | 132" | 138" | 144" | 150" | 156" | 162" | 168" | 174" | 180" |
|---|---|---|---|---|---|---|---|---|---|---|---|
| 42" D | 40-42″ Single Monitors | NO | NO | NO | NO | NO | NO | NO | NO | NO | NO |
| | 46-47″ Single Monitors | NO | NO | NO | NO | NO | NO | NO | NO | NO | NO |
| | 52-55″ Single Monitors | NO | NO | NO | NO | NO | NO | NO | NO | NO | NO |
| | 32″ Dual Monitors | NO | NO | NO | NO | NO | NO | NO | NO | NO | NO |
| 48" D | 40-42″ Single Monitors | YES | YES | YES | YES | YES | YES | YES | YES | YES | YES |
| | 46-47″ Single Monitors | NO | NO | NO | NO | NO | NO | NO | NO | NO | NO |
| | 52-55″ Single Monitors | NO | NO | NO | NO | NO | NO | NO | NO | NO | NO |
| | 32″ Dual Monitors | NO | NO | NO | NO | NO | NO | NO | NO | NO | NO |
| 54" D | 40-42″ Single Monitors | YES | YES | YES | YES | YES | YES | YES | YES | YES | YES |
| | 46-47″ Single Monitors | YES | YES | YES | YES | YES | YES | YES | YES | YES | YES |
| | 52-55″ Single Monitors | NO | NO | NO | NO | NO | NO | NO | NO | NO | NO |
| | 32″ Dual Monitors | NO | NO | NO | NO | NO | NO | NO | NO | NO | NO |
| 60" D | 40-42″ Single Monitors | YES | YES | YES | YES | YES | YES | YES | YES | YES | YES |
| | 46-47″ Single Monitors | YES | YES | YES | YES | YES | YES | YES | YES | YES | YES |
| | 52-55″ Single Monitors | YES | YES | YES | YES | YES | YES | YES | YES | YES | YES |
| | 32″ Dual Monitors | YES | YES | YES | YES | YES | YES | YES | YES | YES | YES |

**Tip** • **See Planes Specification Guide for occupancy guidelines.**

### Planes Conference Tables – Interior Leg – Three-Piece Rectangular

TARA – Rectangular Table

| TABLE DEPTHS | workware view – TABLE MOUNT – SIZES | TABLE LENGTHS 186" | 192" | 198" | 204" | 210" | 216" | 222" | 228" | 234" | 240" | 246" | 252" | 258" | 264" | 270" |
|---|---|---|---|---|---|---|---|---|---|---|---|---|---|---|---|---|
| 42" | 40-42″ Single Monitors | NO | NO | NO | NO | NO | NO | NO | NO | NO | NO | NO | NO | NO | NO | NO |
| | 46-47″ Single Monitors | NO | NO | NO | NO | NO | NO | NO | NO | NO | NO | NO | NO | NO | NO | NO |
| | 52-55″ Single Monitors | NO | NO | NO | NO | NO | NO | NO | NO | NO | NO | NO | NO | NO | NO | NO |
| | 32″ Dual Monitors | NO | NO | NO | NO | NO | NO | NO | NO | NO | NO | NO | NO | NO | NO | NO |
| 48" | 40-42″ Single Monitors | YES | YES | YES | YES | YES | YES | YES | YES | YES | YES | YES | YES | YES | YES | YES |
| | 46-47″ Single Monitors | NO | NO | NO | NO | NO | NO | NO | NO | NO | NO | NO | NO | NO | NO | NO |
| | 52-55″ Single Monitors | NO | NO | NO | NO | NO | NO | NO | NO | NO | NO | NO | NO | NO | NO | NO |
| | 32″ Dual Monitors | NO | NO | NO | NO | NO | NO | NO | NO | NO | NO | NO | NO | NO | NO | NO |
| 54" | 40-42″ Single Monitors | YES | YES | YES | YES | YES | YES | YES | YES | YES | YES | YES | YES | YES | YES | YES |
| | 46-47″ Single Monitors | YES | YES | YES | YES | YES | YES | YES | YES | YES | YES | YES | YES | YES | YES | YES |
| | 52-55″ Single Monitors | NO | NO | NO | NO | NO | NO | NO | NO | NO | NO | NO | NO | NO | NO | NO |
| | 32″ Dual Monitors | NO | NO | NO | NO | NO | NO | NO | NO | NO | NO | NO | NO | NO | NO | NO |
| 60" | 40-42″ Single Monitors | YES | YES | YES | YES | YES | YES | YES | YES | YES | YES | YES | YES | YES | YES | YES |
| | 46-47″ Single Monitors | YES | YES | YES | YES | YES | YES | YES | YES | YES | YES | YES | YES | YES | YES | YES |
| | 52-55″ Single Monitors | YES | YES | YES | YES | YES | YES | YES | YES | YES | YES | YES | YES | YES | YES | YES |
| | 32″ Dual Monitors | YES | YES | YES | YES | YES | YES | YES | YES | YES | YES | YES | YES | YES | YES | YES |

**Tip** • **See Planes Specification Guide for occupancy guidelines.**

# Product Details – workware view – Table Mount

## Table Mounting Guidelines – Recommended Table Sizes

### Planes Conference Tables – Interior Leg – One-Piece Hexagon

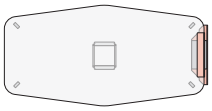

TARX - Hexagon Table

= Table Size Not Available

| TABLE DEPTHS | workware view – TABLE MOUNT – SIZES | TABLE LENGTHS 48" | 54" | 60" | 66" | 72" | 78" | 84" | 90" | 96" | 102" | 108" | 114" | 120" |
|---|---|---|---|---|---|---|---|---|---|---|---|---|---|---|
| 30" D | 40-42″ Single Monitors | | | NO | NO | NO | | | | | | | | |
| | 46-47″ Single Monitors | | | NO | NO | NO | | | | | | | | |
| | 52-55″ Single Monitors | | | NO | NO | NO | | | | | | | | |
| | 32″ Dual Monitors | | | NO | NO | NO | | | | | | | | |
| 36" D | 40-42″ Single Monitors | | | NO | NO | NO | NO | NO | NO | NO | | | | |
| | 46-47″ Single Monitors | | | NO | NO | NO | NO | NO | NO | NO | | | | |
| | 52-55″ Single Monitors | | | NO | NO | NO | NO | NO | NO | NO | | | | |
| | 32″ Dual Monitors | | | NO | NO | NO | NO | NO | NO | NO | | | | |
| 42" D | 40-42″ Single Monitors | NO | NO | NO | NO | NO | NO | NO | NO | NO | NO | NO | NO | NO |
| | 46-47″ Single Monitors | NO | NO | NO | NO | NO | NO | NO | NO | NO | NO | NO | NO | NO |
| | 52-55″ Single Monitors | NO | NO | NO | NO | NO | NO | NO | NO | NO | NO | NO | NO | NO |
| | 32″ Dual Monitors | NO | NO | NO | NO | NO | NO | NO | NO | NO | NO | NO | NO | NO |
| 48" D | 40-42″ Single Monitors | | NO | NO | NO | NO | NO | NO | NO | NO | NO | NO | NO | NO |
| | 46-47″ Single Monitors | | NO | NO | NO | NO | NO | NO | NO | NO | NO | NO | NO | NO |
| | 52-55″ Single Monitors | | NO | NO | NO | NO | NO | NO | NO | NO | NO | NO | NO | NO |
| | 32″ Dual Monitors | | NO | NO | NO | NO | NO | NO | NO | NO | NO | NO | NO | NO |
| 54" D | 40-42″ Single Monitors | | | **YES** | **YES** | **YES** | **YES** | **YES** | **YES** | **YES** | **YES** | **YES** | **YES** | **YES** |
| | 46-47″ Single Monitors | | | NO | NO | NO | NO | NO | NO | NO | NO | NO | NO | NO |
| | 52-55″ Single Monitors | | | NO | NO | NO | NO | NO | NO | NO | NO | NO | NO | NO |
| | 32″ Dual Monitors | | | NO | NO | NO | NO | NO | NO | NO | NO | NO | NO | NO |
| 60" D | 40-42″ Single Monitors | | | | **YES** | **YES** | **YES** | **YES** | **YES** | **YES** | **YES** | **YES** | **YES** | **YES** |
| | 46-47″ Single Monitors | | | | **YES** | **YES** | **YES** | **YES** | **YES** | **YES** | **YES** | **YES** | **YES** | **YES** |
| | 52-55″ Single Monitors | | | | NO | NO | NO | NO | NO | NO | NO | NO | NO | NO |
| | 32″ Dual Monitors | | | | NO | NO | NO | NO | NO | NO | NO | NO | NO | NO |

**Tip** • **See Planes Specification Guide for occupancy guidelines.**

# Product Details – workware view – Table Mount

## Table Mounting Guidelines – Recommended Table Sizes

### Planes Conference Tables – Interior Leg – Two-Piece Hexagon

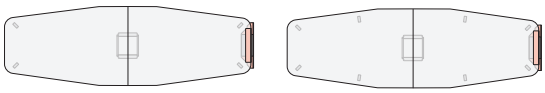

TARX - Hexagon Table

| TABLE DEPTHS | workware view – TABLE MOUNT – SIZES | TABLE LENGTHS 126" | 132" | 138" | 144" | 150" | 156" | 162" | 168" | 174" | 180" |
|---|---|---|---|---|---|---|---|---|---|---|---|
| 42" D | 40-42″ Single Monitors | NO | NO | NO | NO | NO | NO | NO | NO | NO | NO |
| | 46-47″ Single Monitors | NO | NO | NO | NO | NO | NO | NO | NO | NO | NO |
| | 52-55″ Single Monitors | NO | NO | NO | NO | NO | NO | NO | NO | NO | NO |
| | 32″ Dual Monitors | NO | NO | NO | NO | NO | NO | NO | NO | NO | NO |
| 48" D | 40-42″ Single Monitors | NO | NO | NO | NO | NO | NO | NO | NO | NO | NO |
| | 46-47″ Single Monitors | NO | NO | NO | NO | NO | NO | NO | NO | NO | NO |
| | 52-55″ Single Monitors | NO | NO | NO | NO | NO | NO | NO | NO | NO | NO |
| | 32″ Dual Monitors | NO | NO | NO | NO | NO | NO | NO | NO | NO | NO |
| 54" D | 40-42″ Single Monitors | YES | YES | YES | YES | YES | YES | YES | YES | YES | YES |
| | 46-47″ Single Monitors | NO | NO | NO | NO | NO | NO | NO | NO | NO | NO |
| | 52-55″ Single Monitors | NO | NO | NO | NO | NO | NO | NO | NO | NO | NO |
| | 32″ Dual Monitors | NO | NO | NO | NO | NO | NO | NO | NO | NO | NO |
| 60" D | 40-42″ Single Monitors | YES | YES | YES | YES | YES | YES | YES | YES | YES | YES |
| | 46-47″ Single Monitors | YES | YES | YES | YES | YES | YES | YES | YES | YES | YES |
| | 52-55″ Single Monitors | NO | NO | NO | NO | NO | NO | NO | NO | NO | NO |
| | 32″ Dual Monitors | NO | NO | NO | NO | NO | NO | NO | NO | NO | NO |

**Tip** • **See Planes Specification Guide for occupancy guidelines.**

### Planes Conference Tables – Interior Leg – Three-Piece Rectangular

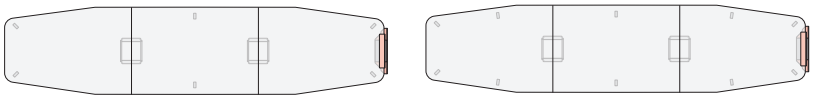

TARX - Hexagon Table

| TABLE DEPTHS | workware view – TABLE MOUNT – SIZES | TABLE LENGTHS 186" | 192" | 198" | 204" | 210" | 216" | 222" | 228" | 234" | 240" | 246" | 252" | 258" | 264" | 270" |
|---|---|---|---|---|---|---|---|---|---|---|---|---|---|---|---|---|
| 42" | 40-42″ Single Monitors | NO | NO | NO | NO | NO | NO | NO | NO | NO | NO | NO | NO | NO | NO | NO |
| | 46-47″ Single Monitors | NO | NO | NO | NO | NO | NO | NO | NO | NO | NO | NO | NO | NO | NO | NO |
| | 52-55″ Single Monitors | NO | NO | NO | NO | NO | NO | NO | NO | NO | NO | NO | NO | NO | NO | NO |
| | 32″ Dual Monitors | NO | NO | NO | NO | NO | NO | NO | NO | NO | NO | NO | NO | NO | NO | NO |
| 48" | 40-42″ Single Monitors | YES | YES | YES | YES | YES | YES | YES | YES | YES | YES | YES | YES | YES | YES | YES |
| | 46-47″ Single Monitors | NO | NO | NO | NO | NO | NO | NO | NO | NO | NO | NO | NO | NO | NO | NO |
| | 52-55″ Single Monitors | NO | NO | NO | NO | NO | NO | NO | NO | NO | NO | NO | NO | NO | NO | NO |
| | 32″ Dual Monitors | NO | NO | NO | NO | NO | NO | NO | NO | NO | NO | NO | NO | NO | NO | NO |
| 54" | 40-42″ Single Monitors | YES | YES | YES | YES | YES | YES | YES | YES | YES | YES | YES | YES | YES | YES | YES |
| | 46-47″ Single Monitors | YES | YES | YES | YES | YES | YES | YES | YES | YES | YES | YES | YES | YES | YES | YES |
| | 52-55″ Single Monitors | NO | NO | NO | NO | NO | NO | NO | NO | NO | NO | NO | NO | NO | NO | NO |
| | 32″ Dual Monitors | NO | NO | NO | NO | NO | NO | NO | NO | NO | NO | NO | NO | NO | NO | NO |
| 60" | 40-42″ Single Monitors | YES | YES | YES | YES | YES | YES | YES | YES | YES | YES | YES | YES | YES | YES | YES |
| | 46-47″ Single Monitors | YES | YES | YES | YES | YES | YES | YES | YES | YES | YES | YES | YES | YES | YES | YES |
| | 52-55″ Single Monitors | YES | YES | YES | YES | YES | YES | YES | YES | YES | YES | YES | YES | YES | YES | YES |
| | 32″ Dual Monitors | YES | YES | YES | YES | YES | YES | YES | YES | YES | YES | YES | YES | YES | YES | YES |

**Tip** • **See Planes Specification Guide for occupancy guidelines.**

# Product Details – workware view – Table Mount

## Table Mounting Guidelines – Recommended Table Sizes

### Planes Conference Tables – Perimeter Leg – Square

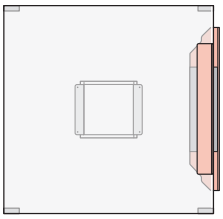

| workware view – TABLE MOUNT – SIZES | TABLE SIZES 42" x 42" | 48" x 48" | 54" x 54" | 60" x 60" | 66" x 66" | 72" x 72" |
|---|---|---|---|---|---|---|
| 40-42" Single Monitors | NO | YES* | YES* | YES | YES | YES |
| 46-47" Single Monitors | NO | NO | YES* | YES | YES | YES |
| 52-55" Single Monitors | NO | NO | NO | YES | YES | YES |
| 32" Dual Monitors | NO | NO | NO | YES | YES | YES |

Note *All Square Tables smaller than 60" x 60" with workware view attached must include a separately specified 14"x14" Cable Base for stability; or the table must be flat bracketed to another table.

- Not for use with Haworth Planes Perimeter Leg Conference Tables manufactured BEFORE October 2013.

Tip • See Planes Specification Guide for occupancy guidelines.

### Planes Conference Tables – Perimeter Leg – Rectangular

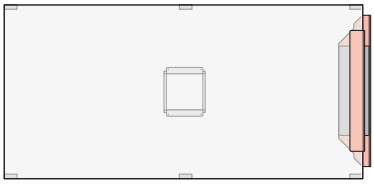

Planes Conference Table –
Perimeter Leg – Rectangular (Top View)
TARQ–_ _ _ _–_ _M_PG4_

= Table Size Not Available

| TABLE DEPTHS | workware view – TABLE MOUNT – SIZES | TABLE LENGTHS 48" | 54" | 60" | 66" | 72" | 78" |
|---|---|---|---|---|---|---|---|
| 30" D | 40-42" Single Monitors | | | NO | NO | NO | |
| | 46-47" Single Monitors | | | NO | NO | NO | |
| | 52-55" Single Monitors | | | NO | NO | NO | |
| | 32" Dual Monitors | | | NO | NO | NO | |
| 36" D | 40-42" Single Monitors | | | NO | NO | | |
| | 46-47" Single Monitors | | | NO | NO | | |
| | 52-55" Single Monitors | | | NO | NO | | |
| | 32" Dual Monitors | | | NO | NO | | |
| 42" D | 40-42" Single Monitors | NO | NO | NO | NO | NO | NO |
| | 46-47" Single Monitors | NO | NO | NO | NO | NO | NO |
| | 52-55" Single Monitors | NO | NO | NO | NO | NO | NO |
| | 32" Dual Monitors | NO | NO | NO | NO | NO | NO |
| 48" D | 40-42" Single Monitors | | YES | YES | YES | YES | YES |
| | 46-47" Single Monitors | | NO | NO | NO | NO | NO |
| | 52-55" Single Monitors | | NO | NO | NO | NO | NO |
| | 32" Dual Monitors | | NO | NO | NO | NO | NO |
| 54" D | 40-42" Single Monitors | | | YES | YES | YES | YES |
| | 46-47" Single Monitors | | | YES | YES | YES | YES |
| | 52-55" Single Monitors | | | NO | NO | NO | NO |
| | 32" Dual Monitors | | | NO | NO | NO | NO |
| 60" D | 40-42" Single Monitors | | | | YES | YES | |
| | 46-47" Single Monitors | | | | YES | YES | |
| | 52-55" Single Monitors | | | | YES | YES | |
| | 32" Dual Monitors | | | | YES | YES | |

Note • Not for use with Haworth Planes Perimeter Leg Conference Tables manufactured BEFORE October 2013.

Tip • See Planes Specification Guide for occupancy guidelines.

# Product Details – workware view – Table Mount

## Table Mounting Guidelines – Recommended Table Sizes

### Planes Conference Tables – One-Piece Top – Perimeter Leg – Rectangular

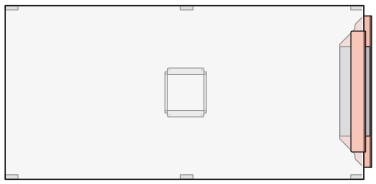

Planes Conference Table –
Perimeter Leg – Rectangular (Top View)
TARQ–_ _ _ _–_ _M_PG4_

= Table Size Not Available

| TABLE DEPTHS | workware view – TABLE MOUNT – SIZES | TABLE LENGTHS 72" | 78" | 84" | 90" | 96" | 102" | 108" | 114" | 120" |
|---|---|---|---|---|---|---|---|---|---|---|
| 36" D | 40-42" Single Monitors | NO | NO | NO | NO | NO | | | | |
| | 46-47" Single Monitors | NO | NO | NO | NO | NO | | | | |
| | 52-55" Single Monitors | NO | NO | NO | NO | NO | | | | |
| | 32" Dual Monitors | NO | NO | NO | NO | NO | | | | |
| 42" D | 40-42" Single Monitors | | | NO | NO | NO | NO | NO | NO | NO |
| | 46-47" Single Monitors | | | NO | NO | NO | NO | NO | NO | NO |
| | 52-55" Single Monitors | | | NO | NO | NO | NO | NO | NO | NO |
| | 32" Dual Monitors | | | NO | NO | NO | NO | NO | NO | NO |
| 48" D | 40-42" Single Monitors | | | YES | YES | YES | YES | YES | YES | YES |
| | 46-47" Single Monitors | | | NO | NO | NO | NO | NO | NO | NO |
| | 52-55" Single Monitors | | | NO | NO | NO | NO | NO | NO | NO |
| | 32" Dual Monitors | | | NO | NO | NO | NO | NO | NO | NO |
| 54" D | 40-42" Single Monitors | | | YES | YES | YES | YES | YES | YES | YES |
| | 46-47" Single Monitors | | | YES | YES | YES | YES | YES | YES | YES |
| | 52-55" Single Monitors | | | NO | NO | NO | NO | NO | NO | NO |
| | 32" Dual Monitors | | | NO | NO | NO | NO | NO | NO | NO |
| 60" D | 40-42" Single Monitors | | | YES | YES | YES | YES | YES | YES | YES |
| | 46-47" Single Monitors | | | YES | YES | YES | YES | YES | YES | YES |
| | 52-55" Single Monitors | | | YES | YES | YES | YES | YES | YES | YES |
| | 32" Dual Monitors | | | YES | YES | YES | YES | YES | YES | YES |

Note • **Not for use with Haworth Planes Perimeter Leg Conference Tables manufactured BEFORE October 2013.**

Tip • **See Planes Specification Guide for occupancy guidelines.**

# Product Details – workware view – Table Mount

## Table Mounting Guidelines – Recommended Table Sizes

### Planes Conference Tables – Perimeter Leg – Two-Piece Tops – Rectangular

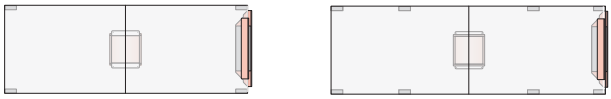

Planes Conference Table – Perimeter Leg – Two Piece Tops – Rectangular (Top View)
TARQ–_ _ _ _–_ _M_PG4_

| TABLE DEPTHS | workware view – TABLE MOUNT – SIZES | TABLE LENGTHS 126" | 132" | 138" | 144" | 150" | 156" | 162" | 168" | 174" | 180" |
|---|---|---|---|---|---|---|---|---|---|---|---|
| 42" D | 40-42″ Single Monitors | NO | NO | NO | NO | NO | NO | NO | NO | NO | NO |
| | 46-47″ Single Monitors | NO | NO | NO | NO | NO | NO | NO | NO | NO | NO |
| | 52-55″ Single Monitors | NO | NO | NO | NO | NO | NO | NO | NO | NO | NO |
| | 32″ Dual Monitors | NO | NO | NO | NO | NO | NO | NO | NO | NO | NO |
| 48" D | 40-42″ Single Monitors | YES | YES | YES | YES | YES | YES | YES | YES | YES | YES |
| | 46-47″ Single Monitors | NO | NO | NO | NO | NO | NO | NO | NO | NO | NO |
| | 52-55″ Single Monitors | NO | NO | NO | NO | NO | NO | NO | NO | NO | NO |
| | 32″ Dual Monitors | NO | NO | NO | NO | NO | NO | NO | NO | NO | NO |
| 54" D | 40-42″ Single Monitors | YES | YES | YES | YES | YES | YES | YES | YES | YES | YES |
| | 46-47″ Single Monitors | YES | YES | YES | YES | YES | YES | YES | YES | YES | YES |
| | 52-55″ Single Monitors | NO | NO | NO | NO | NO | NO | NO | NO | NO | NO |
| | 32″ Dual Monitors | NO | NO | NO | NO | NO | NO | NO | NO | NO | NO |
| 60" D | 40-42″ Single Monitors | YES | YES | YES | YES | YES | YES | YES | YES | YES | YES |
| | 46-47″ Single Monitors | YES | YES | YES | YES | YES | YES | YES | YES | YES | YES |
| | 52-55″ Single Monitors | YES | YES | YES | YES | YES | YES | YES | YES | YES | YES |
| | 32″ Dual Monitors | YES | YES | YES | YES | YES | YES | YES | YES | YES | YES |

Note • **Not for use with Haworth Planes Perimeter Leg Conference Tables manufactured BEFORE October 2013.**

Tip • **See Planes Specification Guide for occupancy guidelines.**

### Planes Conference Tables – Interior Leg – Three-Piece Rectangular

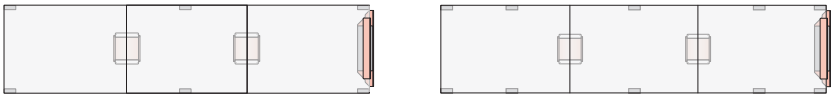

Planes Conference Table – Perimeter Leg – Two Piece Tops – Rectangular (Top View)
TARQ–_ _ _ _–_ _M_PG4_

| TABLE DEPTHS | workware view – TABLE MOUNT – SIZES | TABLE LENGTHS 186" | 192" | 198" | 204" | 210" | 216" | 222" | 228" | 234" | 240" | 246" | 252" | 258" | 264" | 270" |
|---|---|---|---|---|---|---|---|---|---|---|---|---|---|---|---|---|
| 42" | 40-42″ Single Monitors | NO | NO | NO | NO | NO | NO | NO | NO | NO | NO | NO | NO | NO | NO | NO |
| | 46-47″ Single Monitors | NO | NO | NO | NO | NO | NO | NO | NO | NO | NO | NO | NO | NO | NO | NO |
| | 52-55″ Single Monitors | NO | NO | NO | NO | NO | NO | NO | NO | NO | NO | NO | NO | NO | NO | NO |
| | 32″ Dual Monitors | NO | NO | NO | NO | NO | NO | NO | NO | NO | NO | NO | NO | NO | NO | NO |
| 48" | 40-42″ Single Monitors | YES | YES | YES | YES | YES | YES | YES | YES | YES | YES | YES | YES | YES | YES | YES |
| | 46-47″ Single Monitors | NO | NO | NO | NO | NO | NO | NO | NO | NO | NO | NO | NO | NO | NO | NO |
| | 52-55″ Single Monitors | NO | NO | NO | NO | NO | NO | NO | NO | NO | NO | NO | NO | NO | NO | NO |
| | 32″ Dual Monitors | NO | NO | NO | NO | NO | NO | NO | NO | NO | NO | NO | NO | NO | NO | NO |
| 54" | 40-42″ Single Monitors | YES | YES | YES | YES | YES | YES | YES | YES | YES | YES | YES | YES | YES | YES | YES |
| | 46-47″ Single Monitors | YES | YES | YES | YES | YES | YES | YES | YES | YES | YES | YES | YES | YES | YES | YES |
| | 52-55″ Single Monitors | NO | NO | NO | NO | NO | NO | NO | NO | NO | NO | NO | NO | NO | NO | NO |
| | 32″ Dual Monitors | NO | NO | NO | NO | NO | NO | NO | NO | NO | NO | NO | NO | NO | NO | NO |
| 60" | 40-42″ Single Monitors | YES | YES | YES | YES | YES | YES | YES | YES | YES | YES | YES | YES | YES | YES | YES |
| | 46-47″ Single Monitors | YES | YES | YES | YES | YES | YES | YES | YES | YES | YES | YES | YES | YES | YES | YES |
| | 52-55″ Single Monitors | YES | YES | YES | YES | YES | YES | YES | YES | YES | YES | YES | YES | YES | YES | YES |
| | 32″ Dual Monitors | YES | YES | YES | YES | YES | YES | YES | YES | YES | YES | YES | YES | YES | YES | YES |

Note • **Not for use with Haworth Planes Perimeter Leg Conference Tables manufactured BEFORE October 2013.**

Tip • **See Planes Specification Guide for occupancy guidelines.**

# Product Details – workware view – Table Mount

## Table Mounting Guidelines – Recommended Table Sizes

- workware view cannot be used with Reside Round, Pebble or Hex Tables because of stability and configuration issues or because the tables have curved edges.

### Reside Square Table

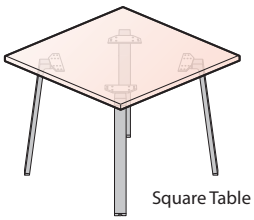

Square Table – TKRQ

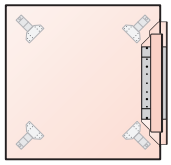

| workware view – TABLE MOUNT – SIZES | TABLE SIZES – 36" x 36" | 42" x 42" | 48" x 48" |
|---|---|---|---|
| 40-42" Single Monitors | NO | NO | **YES** |
| 46-47" Single Monitors | NO | NO | NO |
| 52-55" Single Monitors | NO | NO | NO |
| 32" Dual Monitors | NO | NO | NO |

Note
- The 48" x 48" Reside Square Table with workware view attached must include a separately specified 14"x14" Cable Base or be flat bracketed to another table for stability issues.
- **See Planes Specification Guide for occupancy guidelines.**

### Reside Rectangular Table

- workware view cannot be used with 36" or 42" Depth Rectangular Tables because of configuration issues.

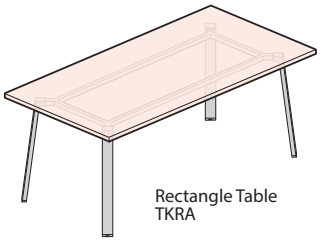

Rectangle Table
TKRA

| workware view – TABLE MOUNT – SIZES | TABLE SIZES – 48" x 60" | 48" x 72" | 48" x 96" |
|---|---|---|---|
| 40-42" Single Monitors | **YES** | **YES** | **YES** |
| 46-47" Single Monitors | NO | NO | NO |
| 52-55" Single Monitors | NO | NO | NO |
| 32" Dual Monitors | NO | NO | NO |

Note
- The Reside 48" x 60" Rectangular Table with workware view attached must include a separately specified 14"x14" Cable Base or be flat bracketed to another table for stability issues.
- **See Planes Specification Guide for occupancy guidelines.**

### Reside Bench End

- Some workware view units can be used with Reside Bench End at the end of a Reside benching application.

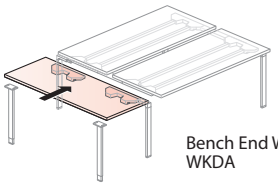

Bench End Worksurface
WKDA

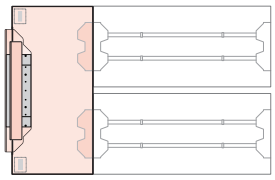

| workware view – TABLE MOUNT – SIZES | BENCH END SIZES – 51" x 24" | 63" x 30" | 75" x 36" |
|---|---|---|---|
| 40-42" Single Monitors | **YES** | **YES** | **YES** |
| 46-47" Single Monitors | NO | **YES** | **YES** |
| 52-55" Single Monitors | NO | **YES** | **YES** |
| 32" Dual Monitors | NO | **YES** | **YES** |

Note
- Reside Bench End must be attached to the end of a Reside Benching Application.
- **See Planes Specification Guide for occupancy guidelines.**

# Product Details – workware view Wall Mount

## workware view – Enclose Wall Proud Mount

- workware view provides monitor support while integrating the monitor within the workspace.
- workware view – Enclose Wall Proud Mount units are designed for use with Enclose walls. (not for use with full height glass walls).
- Units with shrouds are available in three sizes: 46″/47″ monitors, 52″/55″ monitors or 65″/ 70″ Monitors.
- Designed to accommodate most brands of monitors with centrally located VESA® mounting hole patterns ranging from 300-600mm (width) x 200-400mm (height).
- 1080P LED monitors are highly recommended with 100 pounds maximum weight limit per monitor.
- Units may be Field installed on Enclose Walls; field modification is required; wall panel will be defaced.
- workware view – Enclose Wall – Single Monitor units are available with a 3 ⅛″ or 12″ Deep radius edge shelf, Dual Monitor units are available with only a 3 ⅛″ deep radius shelf.
- Dual Monitor units take advantage of the capability of the workware processor (included with the interface module – switching) to drive two separate monitors. This enables each user to select which monitor they present on. Additional applications using the workware wireless module are also possible.
- Separately specified Camera Shelf may be mounted in the center of the of the unit for applications using field supplied video conferencing equipment.

**Single Monitor without Shroud**
EWVD-SNNN-PN

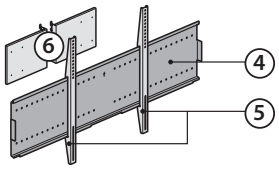


**Single Monitor with Shroud – 3 ⅛″ deep radius edge shelf**
EWVE-S_SS-PP

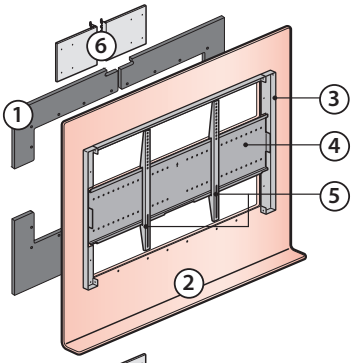


**Single Monitor with Shroud – 12″ deep radius edge shelf**
EWVE-S_SD-PP

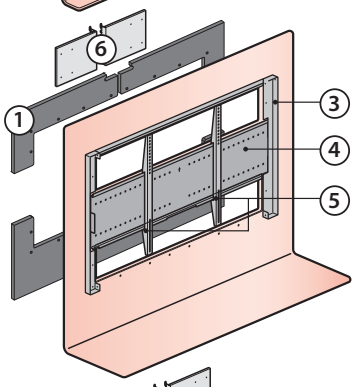


**Dual Monitor with Shroud – 3 ⅛″ deep radius edge shelf**
EWVE-D_SS-PP

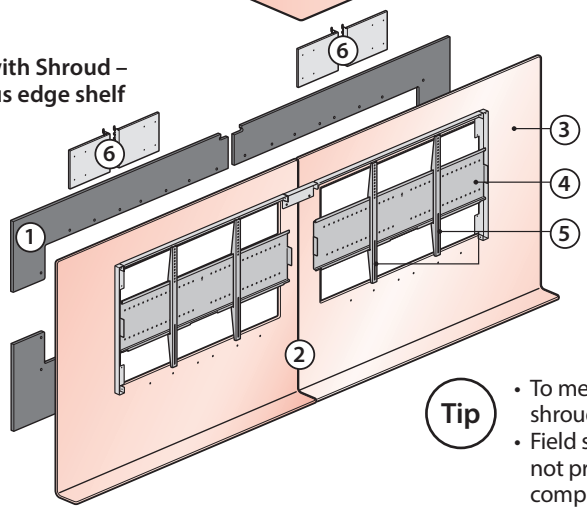


**Exploded View**

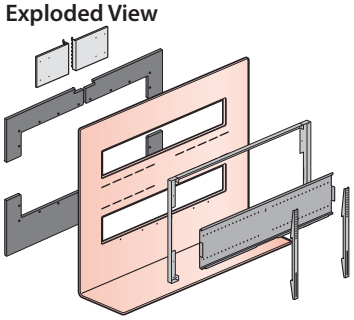

1. **Spacer**
   - Stabilizes the shroud on the wall.
   - Color is standard in black.
2. **Shroud**
   - Conceals the rear of the monitor to increase the aesthetic appearance of a work environment.
   - Available with 12″ or 3 ⅛″ deep radius edge shelf.
   - Color is specified trim color.
3. **Light Block**
   - Conceals the view of the cables on the back of the monitor to provide a clean aesthetic appearance.
   - Color is standard in black.
4. **Monitor Mounting Bracket**
   - Attaches to the Structural Walls and supports the Monitor Bracket.
   - Color is standard in black.
5. **Monitor Brackets**
   - Attaches To Monitor so it can slide on to the Monitor Mounting Bracket.
   - Color is standard in black.
6. **Enclose Wall Mounting Bracket**
   - Attaches the Shroud and Monitor Mounting Bracket to Enclose Wall Panel.
   - Color is standard in black.

**Tip**
- To meet ADA compliance specify workware view with shroud – 3 ⅛″ deep radius shelf or without shroud.
- Field supplied monitors mounted on the brackets should not protrude more than 4″ from the wall to meet ADA compliance (thinner LED monitors are recommended).

# Product Details – workware view Wall Mount

## Overview – workware view – Structural Wall Proud Mount

- workware view – Structural Wall Proud Mount units are designed to be anchored to a structural wall with properly blocked 3/4" plywood or 2"x 4" wood studs behind the drywall.
- Designed to accommodate most brands of monitors with centrally located VESA® mounting hole patterns ranging from 300-600mm (width) x 200-400mm (height).
- Units with shrouds are available in three sizes: 46"/47" monitors, 52"/55" monitors or 65"/ 70" Monitors.
- 1080P LED monitors are highly recommended with 100 pounds maximum weight per monitor.
- Field installation and structural wall modifications required; structural wall will be defaced.
- workware view – Enclose Wall – Single Monitor units are available with a 3 ⅛" or 12" Deep radius edge shelf, Dual Monitor units are available with only a 3 ⅛" deep radius shelf.
- Dual Monitor units take advantage of the capability of the workware processor (included with the interface module – switching) to drive two separate monitors. This enables each user to select which monitor they present on. Additional applications using the workware wireless module are also possible.
- Separately specified Camera Shelf may be mounted in the center of the of the unit for applications using field supplied video conferencing equipment.

**Single Monitor without Shroud**
EWVD-SNNN-PN

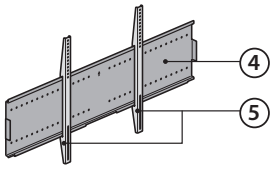


**Single Monitor with Shroud – 3 ⅛" deep radius edge shelf**
EWVD-S_SS-PP

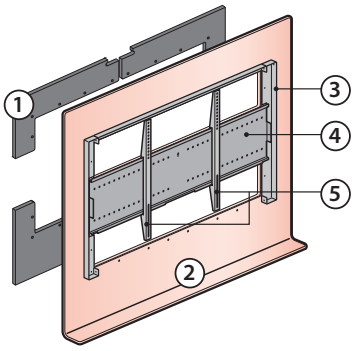


**Single Monitor with Shroud – 12" deep radius edge shelf**
EWVD-S_SD-PP

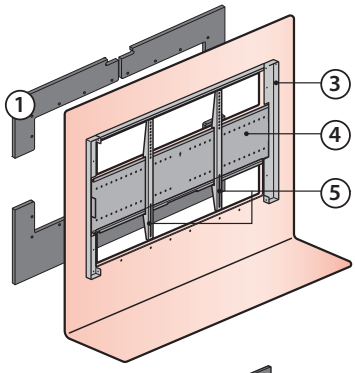


**Dual Monitor with Shroud – 3 ⅛" deep radius edge shelf**
EWVD-D_SS-PP

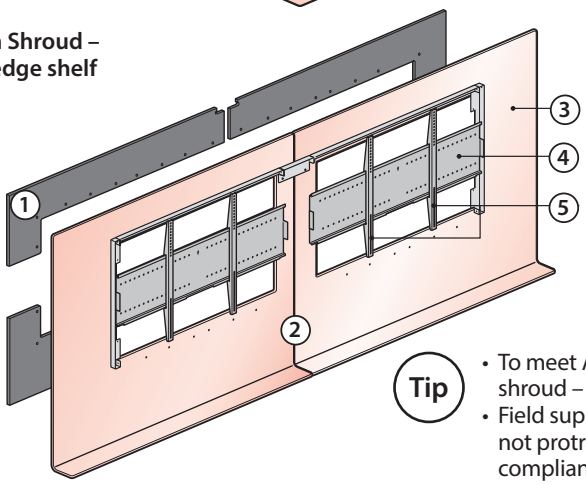


**Exploded View**

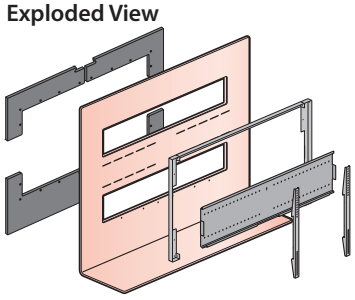

**1 Spacer**
- Stabilizes the shroud on the wall.
- Color is standard in black.

**2 Shroud**
- Conceals the rear of the monitor to increase the aesthetic appearance of a work environment.
- Available with 12" or 3 ⅛" deep radius edge shelf.
- Color is specified trim color.

**3 Light Block**
- Conceals the view of the cables on the back of the monitor to provide a clean aesthetic appearance.
- Color is standard in black.

**4 Monitor Mounting Bracket**
- Attaches to the Structural Walls and supports the Monitor Bracket.
- Color is standard in black.

**5 Monitor Brackets**
- Attaches To Monitor so it can slide on to the Monitor Mounting Bracket.
- Color is standard in black.

**Tip**
- To meet ADA compliance specify workware view with shroud – 3 ⅛" deep radius shelf or without shroud.
- Field supplied monitors mounted on the brackets should not protrude more than 4" from the wall to meet ADA compliance (thinner LED monitors are recommended).

# Product Details – workware view Wall Mount

## Dimensions – workware view – Enclose Wall / Structural Wall Mounts – Single Monitor With Shroud

### 46-47 Inch – Single Monitor – EWV_-SAS_-PP

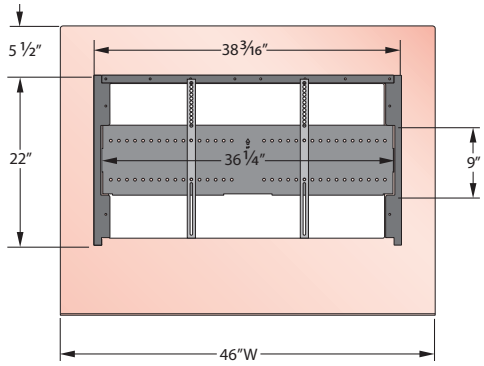


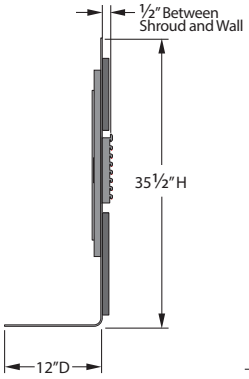


**Side View – 12" deep radius edge shelf**

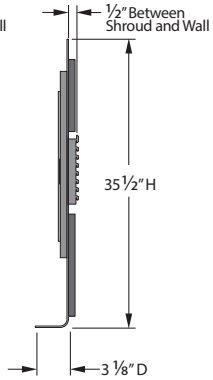


**Side View – 3 1/8" deep radius edge shelf**

### 52-55 Inch – Single Monitor – EWV_-SBS_-PP

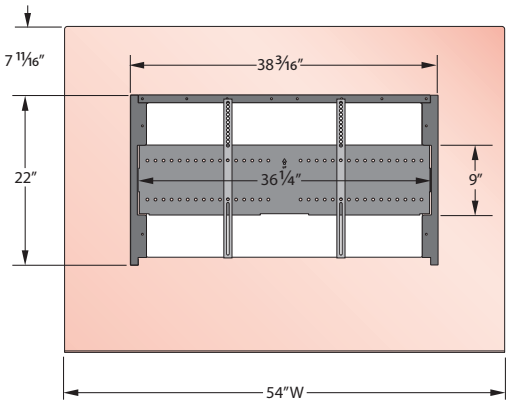


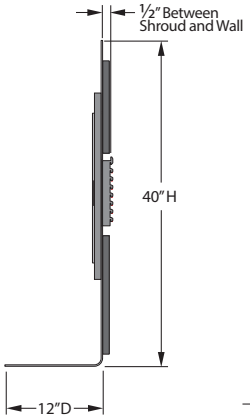


**Side View – 12" deep radius edge shelf**

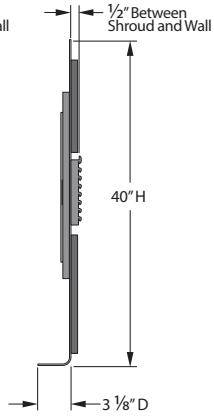


**Side View – 3 1/8" deep radius edge shelf**

### 65-70 Inch – Single Monitor – EWV_-SCS_-PP

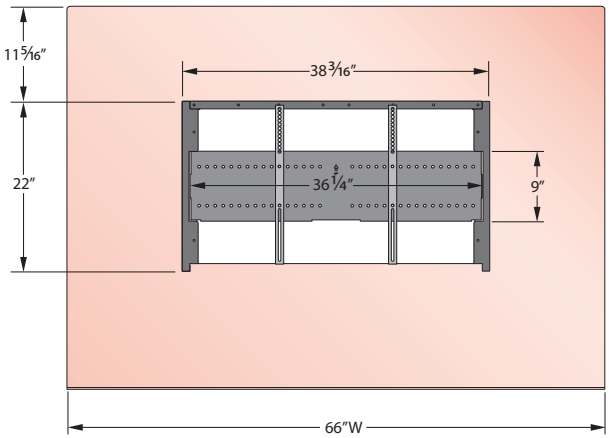


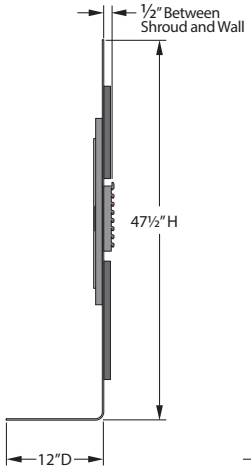


**Side View – 12" deep radius edge shelf**

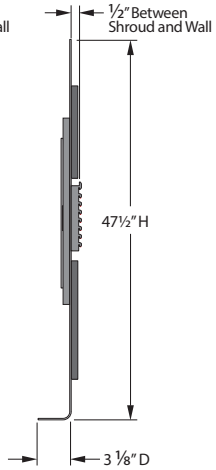


**Side View – 3 1/8" deep radius edge shelf**

**Tip**

- To meet ADA compliance specify workware view with shroud – 3 1/8" deep radius shelf or without shroud.
- Field supplied monitors mounted on the brackets should not protrude more than 3 1/8" from the wall to meet ADA compliance (thinner LED monitors are recommended).

# Product Details – workware view Wall Mount

## Dimensions – workware view – Enclose Wall / Structural Wall Mounts – Dual Monitor With Shroud

### 46-47 Inch – Dual Monitors – EWV_-DASS-PP

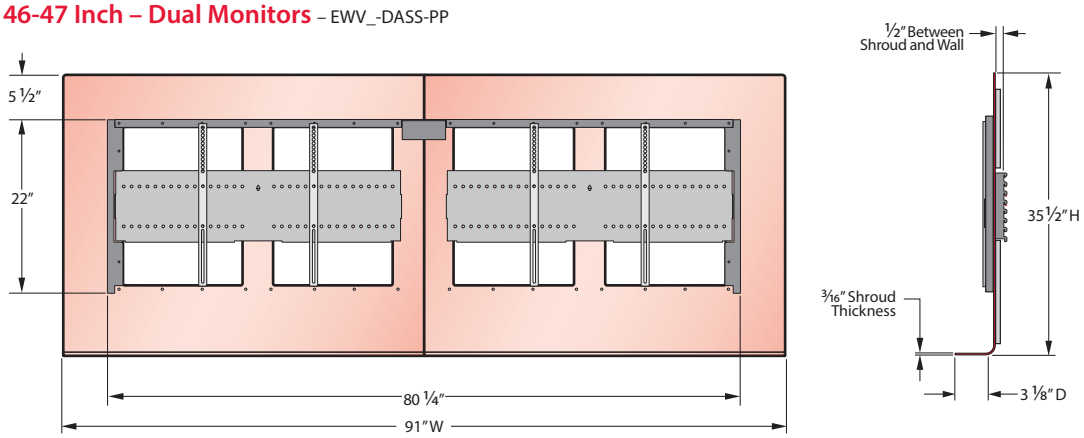


### 52-55 Inch – Dual Monitors – EWV_-DBSS-PP

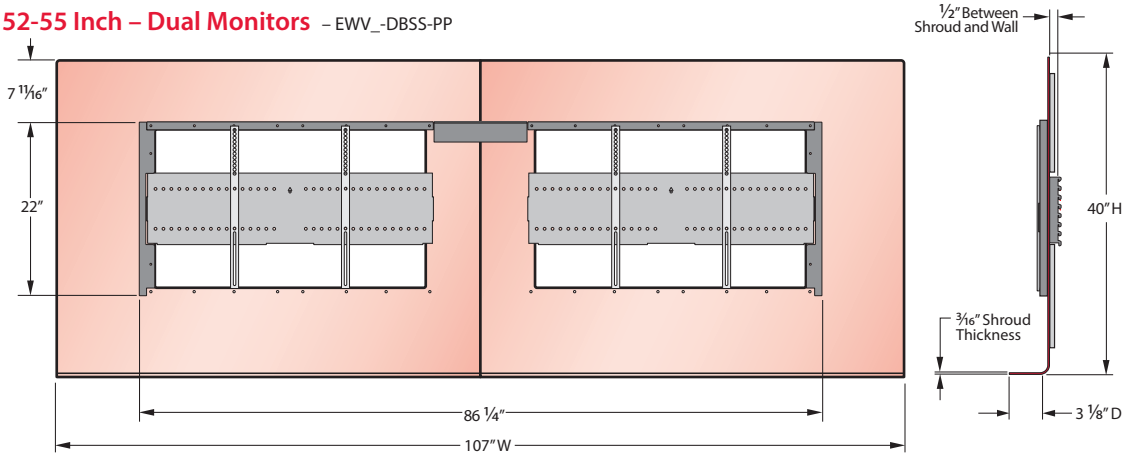


### 65-70 Inch – Dual Monitors – EWV_-DCSS-PP

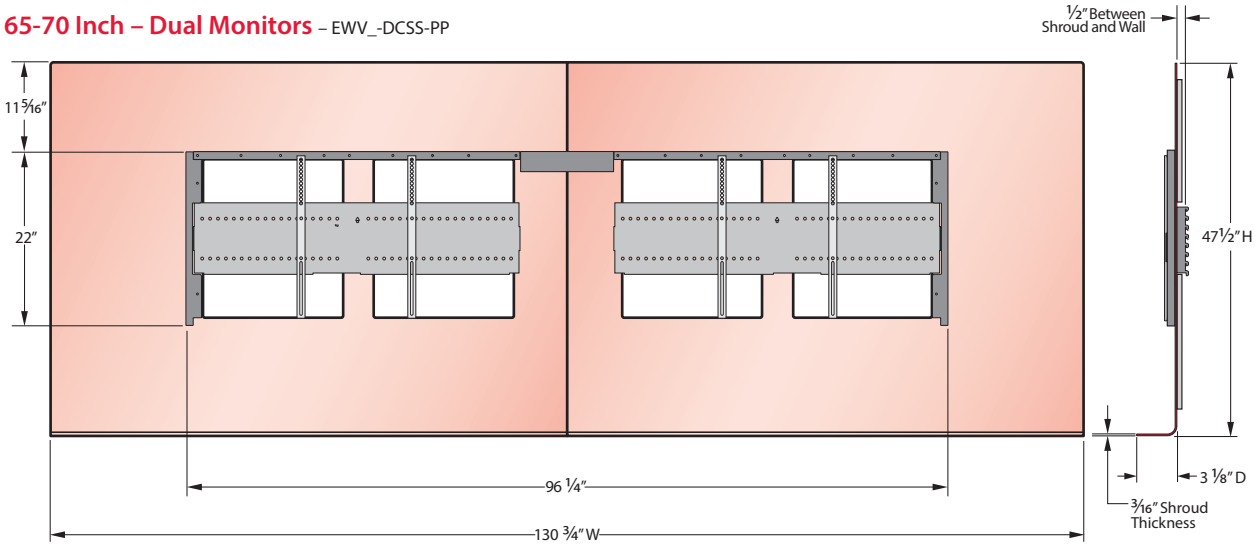


**Tip**

- To meet ADA compliance specify workware view with shroud – 3 ⅛" deep radius shelf or without shroud.
- Field supplied monitors mounted on the brackets should not protrude more than 3 ⅛" from the wall to meet ADA compliance (thinner LED monitors are recommended).

# Product Details – workware view Wall Mount

## Dimensions – workware view – Single Monitor Without Shroud

### 46-70 Inch Monitors – EWV_-SNNN-PN

#### Monitor Mounting Bracket

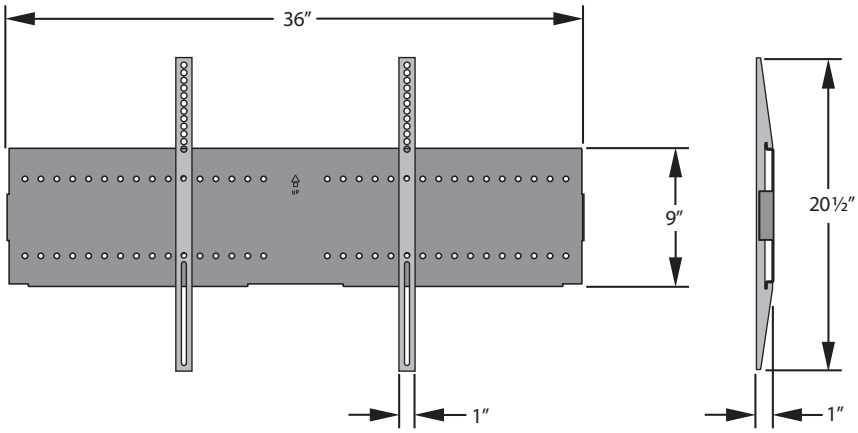


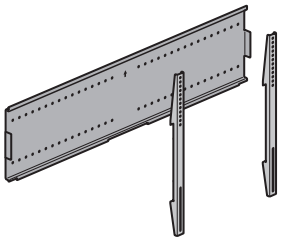

**workware view**
**Structural Walls – Proud Mount**
**Single Monitor Without Shroud**
**(Does Not Include Enclose Wall Brackets)**

#### Enclose Wall Brackets

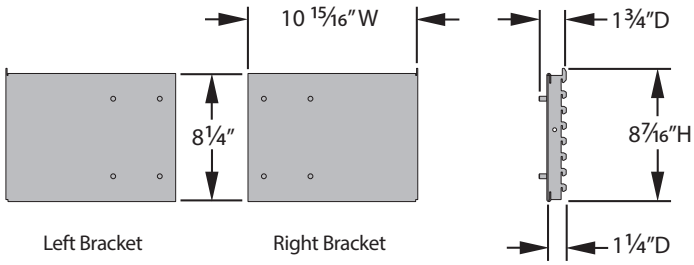


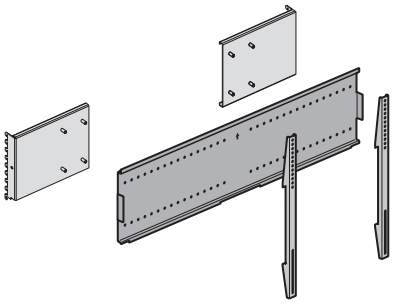

**workware view –**
**Enclose Walls – Proud Mount**
**Single Monitor Without Shroud**
**(Does Include Enclose Wall Brackets)**

**Tip**

- To meet ADA compliance specify workware view with shroud – 3 ⅛″ deep radius shelf or without shroud.
- Field supplied monitors mounted on the brackets should not protrude more than 3 ⅛″ from the wall to meet ADA compliance (thinner LED monitors are recommended).

# Product Details – workware view Wall Mount

## Monitor Considerations – Single Monitor

- 1080P LED Monitor is recommended (See below for size requirements).
- Requires monitor with (1) HDMI connection to connect workware.
- Applications without a Switching Interface Module control monitor power from the monitor or with a remote control.
- Wall Mounted units are designed to accommodate most brands of monitors with centrally located VESA® mounting patterns with width between 300mm-600mm and heights between 200mm-400mm.

**To prevent the monitor form disengaging from the unit, the width of the monitor mounting pattern may not be less than 300mm wide.**

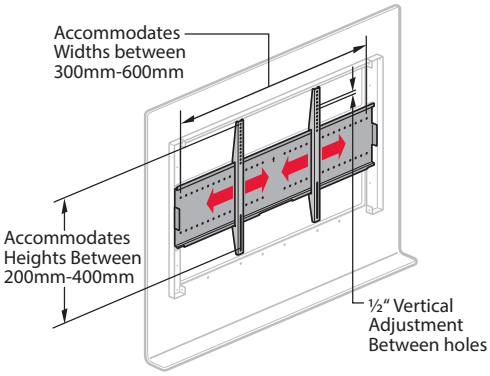


### workware view – Wall Mount – 46"-47" Monitor

Back of typical 46"-47" Monitor

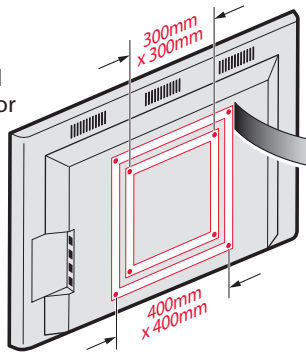


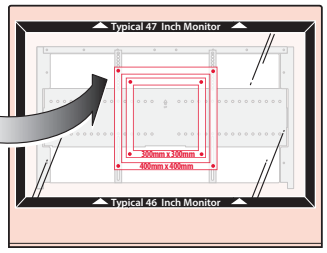


**Accommodates VESA® Hole Patterns:**
- 300-600mm (width) x 200-400mm (height)

**Maximum Load:**
- 100 lbs. Total (includes weight of monitor and any other mounted equipment such as a video conferencing camera)

**Monitor Size Requirements**

| | Minimum | Maximum |
|---|---|---|
| Width | 39.2" | 45" |
| Height | 23" | 34.5" |
| Load | – | 100 lbs. |

### workware view – Wall Mount – 52"-55" Monitor

Back of typical 52"-55" Monitor

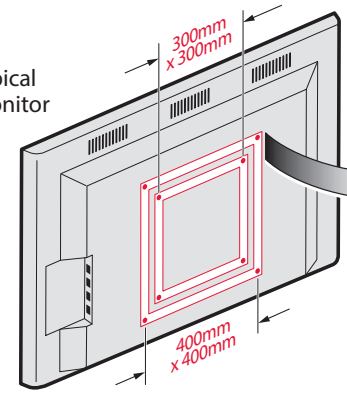


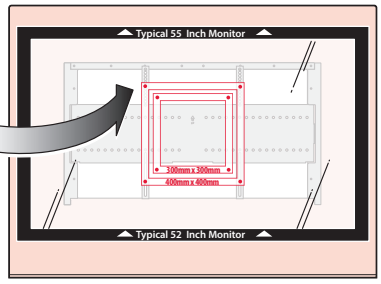


**Accommodates VESA® Hole Patterns:**
- 300-600mm (width) x 200-400mm (height)

**Maximum Load Capacity:**
- 100 lbs. Total (includes weight of monitor and any other mounted equipment such as a video conferencing camera)

**Monitor Size Requirements**

| | Minimum | Maximum |
|---|---|---|
| Width | 42.5" | 53" |
| Height | 27" | 39" |
| Load | – | 100 lbs. |

### workware view – Wall Mount – 65"-70" Monitor

Back of typical 65"-70" Monitor

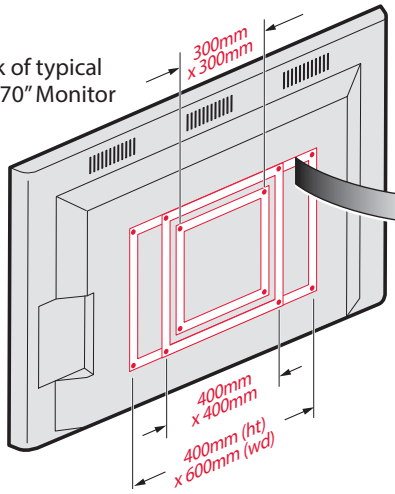


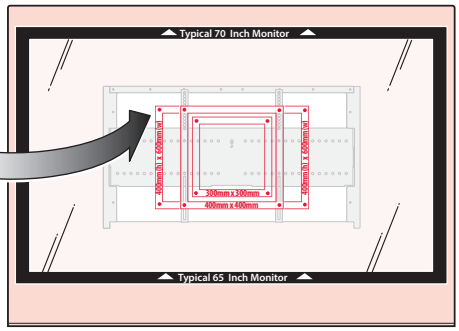


**Accommodates VESA® Hole Patterns:**
- 300-600mm (width) x 200-400mm (height)

**Maximum Load Capacity:**
- 100 lbs. Total (includes weight of monitor and any other mounted equipment such as a video conferencing camera)

**Monitor Size Requirements**

| | Minimum | Maximum |
|---|---|---|
| Width | 52.1" | 65" |
| Height | 30" | 46.5" |
| Load | – | 100 lbs. |

# Product Details – workware view Wall Mount

## Monitor Considerations – Dual Monitor

- 1080P LED Monitor is recommended (See below for size requirements).
- Wall Mounted units are designed to accommodate most brands of monitors with centrally located VESA® mounting patterns with widths between 300mm-600mm and heights between 200mm-400mm.
- Applications without a Switching Interface Module control monitor power from the monitor or with a remote control.
- In order to cover interior components the monitors should be touching in the center of the unit, this could block access to controls on the side of some monitors (use remote control or workware connect with Touch Control to operate monitor).

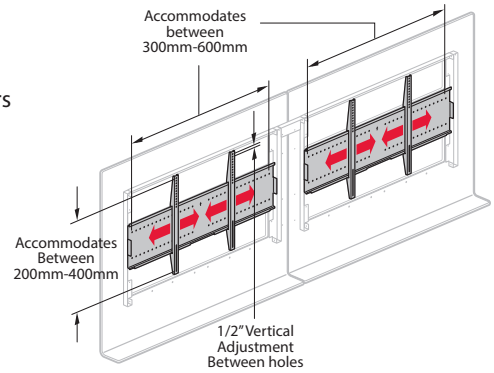


**To prevent the monitor form disengaging from the unit, the width of the monitor mounting pattern may not be less than 300mm wide.**

### workware view – Wall Mount 46"-47" Dual Monitors

**Accommodates VESA® Hole Patterns:** 300mm-600mm (width) x 200mm-400mm (height)
**Maximum Load Capacity:** 100 lbs. (each side)

Back of typical 46"-47" Monitor

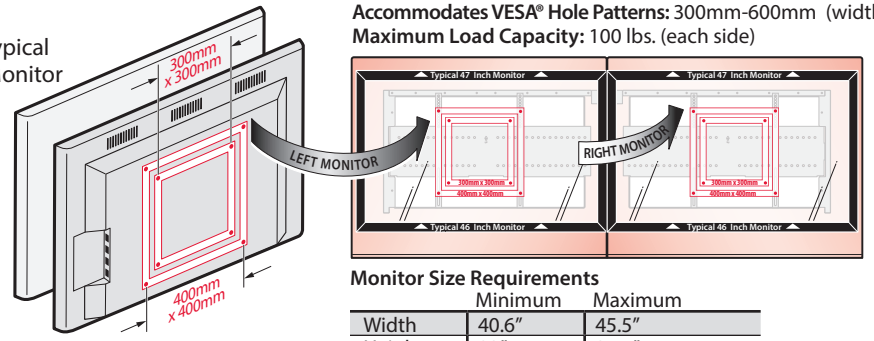


**Monitor Size Requirements**

| | Minimum | Maximum |
|---|---|---|
| Width | 40.6" | 45.5" |
| Height | 23" | 34.5" |
| Load | – | 100 lbs. (per side) |

### workware view – Wall Mount 52"-55" Dual Monitor

**Accommodates VESA® Hole Patterns:** 300mm-600mm (width) x 200mm-400mm (height)
**Maximum Load Capacity:** 100 lbs. (each side)

Back of typical 52"-55" Monitor

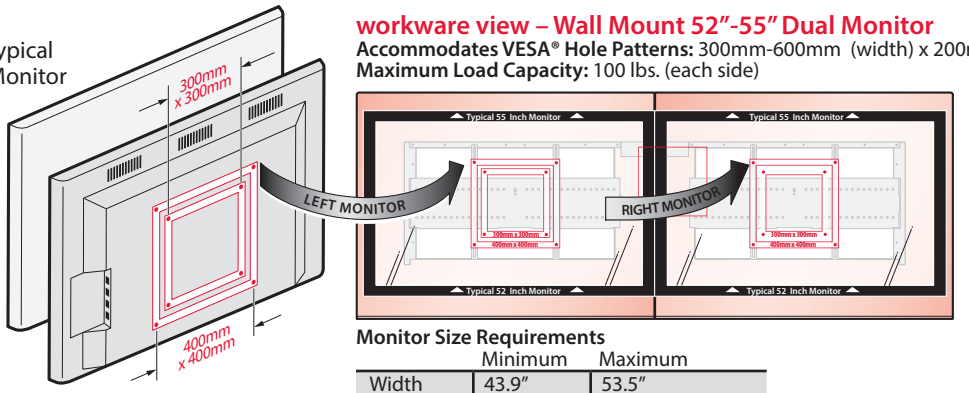


**Monitor Size Requirements**

| | Minimum | Maximum |
|---|---|---|
| Width | 43.9" | 53.5" |
| Height | 27" | 39" |
| Load | – | 100 lbs. (per side) |

### workware view – Wall Mount 65"-70" Dual Monitors

**Accommodates VESA® Hole Patterns:** 300mm-600mm (width) x 200mm-400mm (height)
**Maximum Load Capacity:** 100 lbs. (each side)

Back of typical 65"-70" Monitor

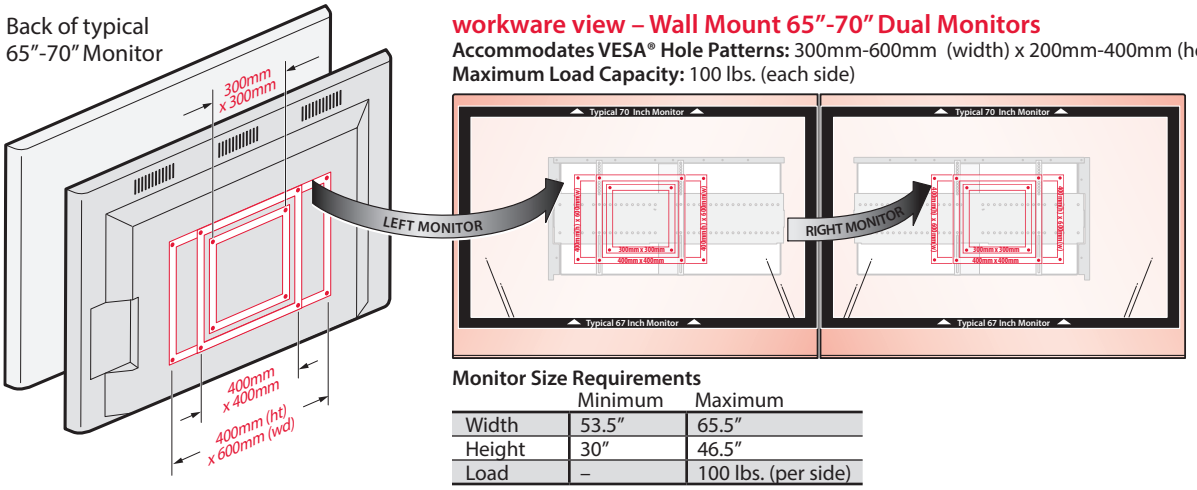


**Monitor Size Requirements**

| | Minimum | Maximum |
|---|---|---|
| Width | 53.5" | 65.5" |
| Height | 30" | 46.5" |
| Load | – | 100 lbs. (per side) |

# Product Details – workware view Wall Mount

## Enclose Wall Mounting Applications

### Center Mount Application – Centers the unit on one wall seam.

- One of the many key benefits of Enclose walls is the ability to mount components directly to the wall panels. workware view – Enclose Wall – Proud Mount units mount seamlessly to Enclose walls panels using the Enclose Walls Mounting Brackets.
- The units may be Center Mounted (centers the unit and brackets on one wall seam) or they may be Side Rail Mounted (mounts two Enclose Wall Mounting Brackets on each side of an Enclose Wall tile to support the unit) on the Enclose walls.
- The Mounting Bracket and Shroud must be properly anchored to an Enclose Wall; anchors are not provided and must be field supplied based upon type of Enclose wall surface (wood, drywall, metal, laminate, fabric); wall tile will be defaced.
- The monitor and any other mounted equipment such as video conferencing camera may not exceed the wall mounted units 100lbs. maximum load capacity (Dual monitor units can support a maximum load capacity of 100lbs on each half).

### Center Mount Application – Centers the unit and brackets on one wall seam.

- The center mount application mounts two Enclose Wall Mounting Brackets on a single Enclose wall seam to support the unit (or each half of the unit for dual monitor units).

Center Mount – Single Monitor Application

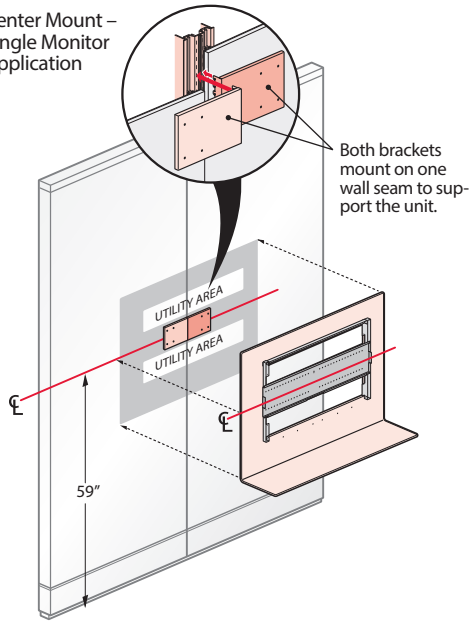


Center Mount – Dual Monitor Application

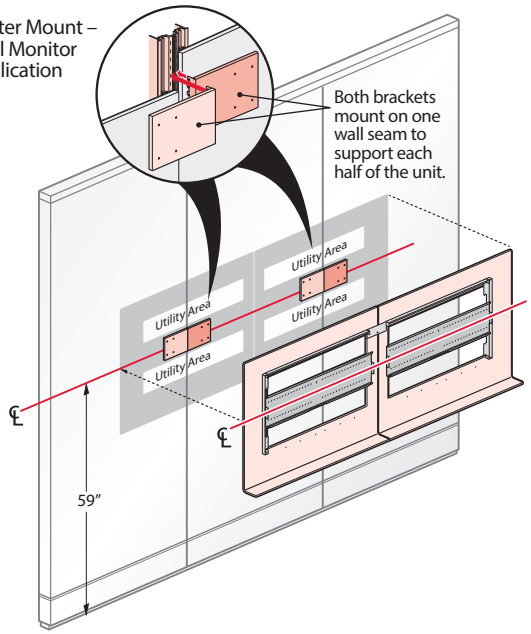


### Side Rail Mount Application – Centers the unit on one Enclose Wall tile.

- The side rail mount application mounts two Enclose Wall Mounting Brackets on each side of an Enclose wall tile to support the unit (or each half of the unit for dual monitor units).

Side Rail Mount – Single Monitor Application

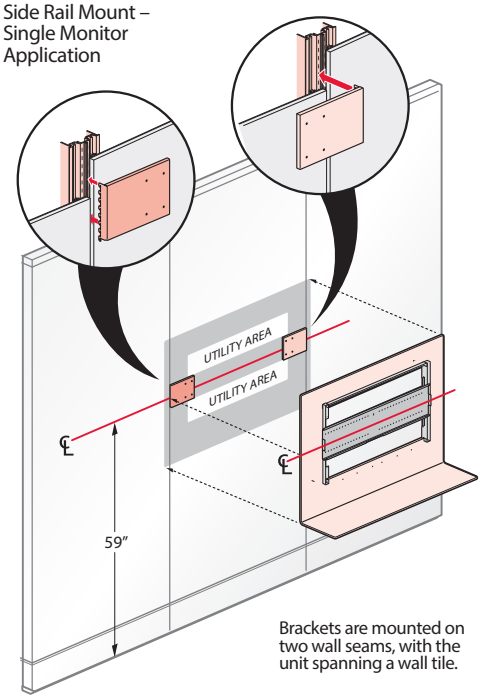


Side Rail Mount – Dual Monitor Application

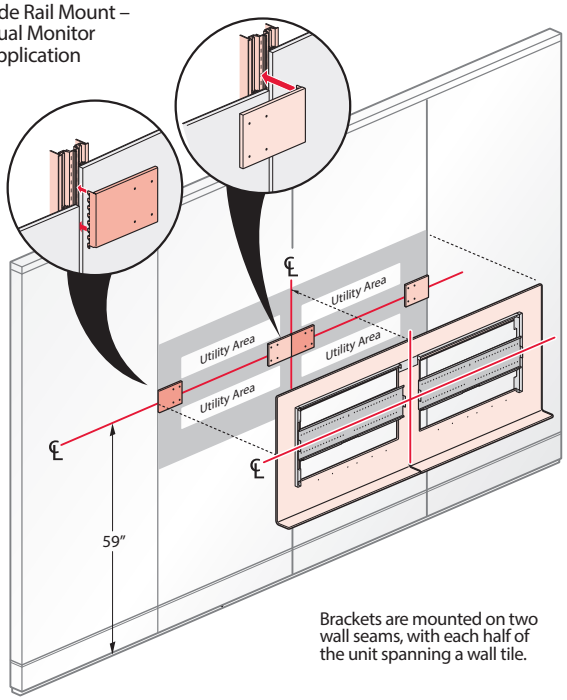

# Product Details – workware view Wall Mount

## Enclose Wall – Center Mount Application – Single Monitor

### Center Mount Application – Centers the unit on one wall seam.

- The center mount application for single monitors mounts two Enclose Wall Mounting Brackets on a single Enclose wall seam to support the unit.
- Mounting Bracket/Shroud must be properly anchored to an Enclose Wall; anchors are not provided and must be field supplied based upon type of Enclose wall surface (wood,drywall, metal, laminate, fabric); wall tile will be defaced.
- Audio/Video Cables, Power and Data Receptacles should be placed in the Utility Area to line up with the utility cutouts in the shroud.
- This application supports one monitors with a 100 lbs. maximum weight limit.

① **Enclose Walls Mounting Brackets**

② **Internal Vertical Frame Member**
- Includes integrated mounting slots.
- Slots located at 1″ intervals

③ **Removable Enclose Tiles**

④ **workware view – Enclose Walls – Proud Mount**

⑤ **Utility Areas – for Shroud Utility Cutouts**
- Audio, video, power and data receptacles should be placed in the Utility Area to line up with the utility cutouts in the shroud.

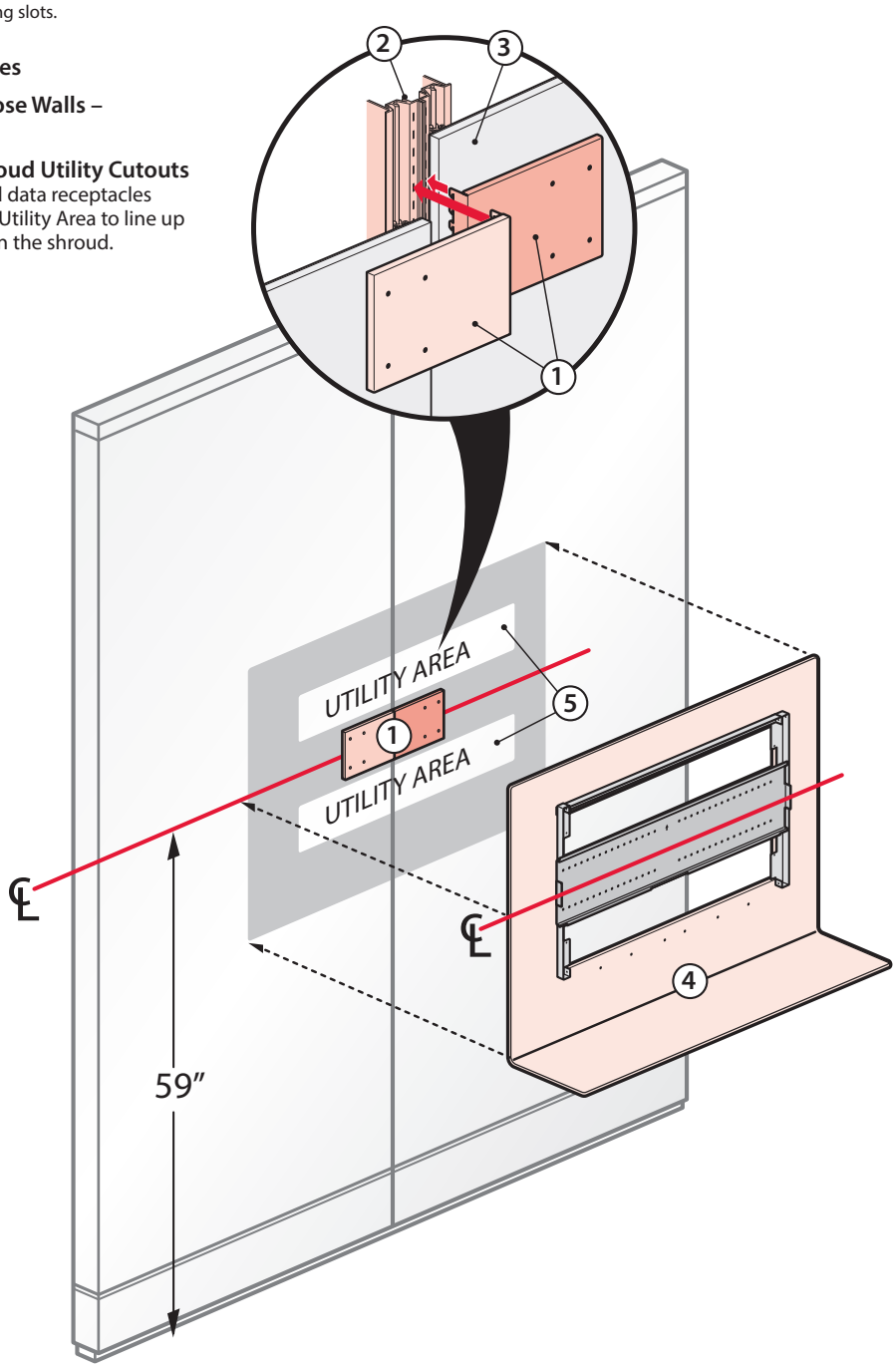

# Product Details – workware view Wall Mount

## Enclose Wall – Center Mount Application – Single Monitor

### Without Shroud – 46”-70” Single Monitor
EWVE-SNNN-PN

- Center mount on 42” or 48” Enclose Wall Tiles only.

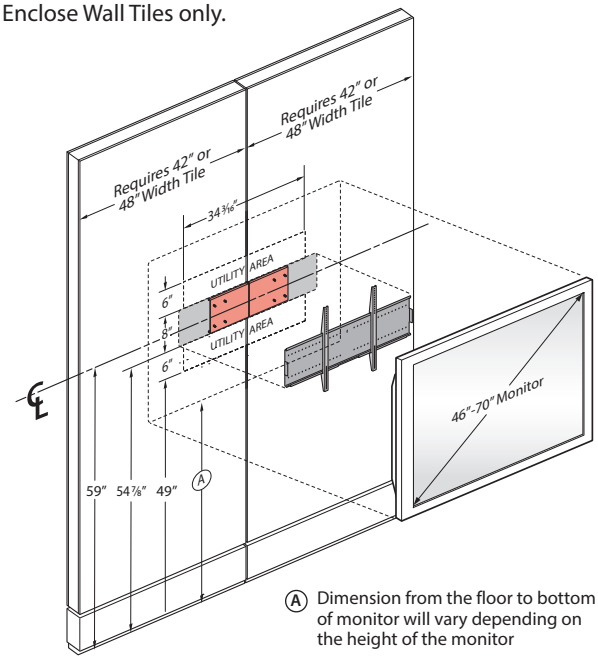


A Dimension from the floor to bottom of monitor will vary depending on the height of the monitor

### With Shroud – 46”-47” Single Monitor
EWVE-SASS-PP

- Center Mount on 42” Enclose Wall Tiles only.

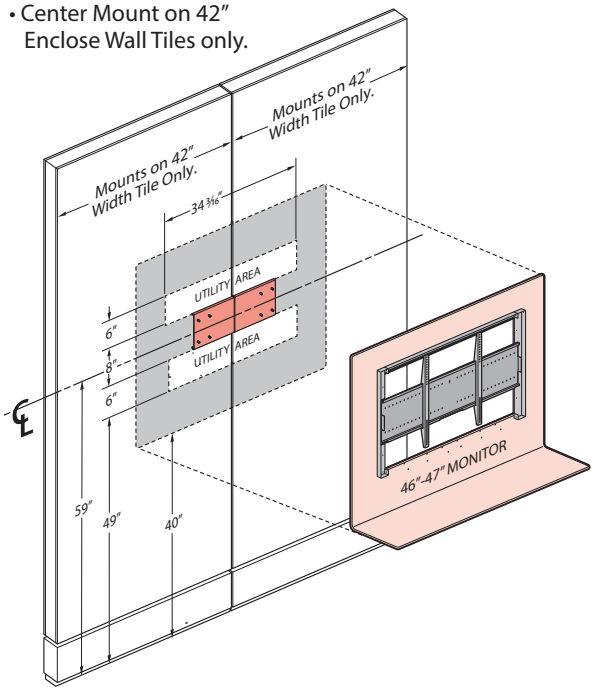


### With Shroud – 52”-55” Single Monitor
EWVE-SBSS-PP

- Center Mount on 48” Enclose Wall Tiles only.

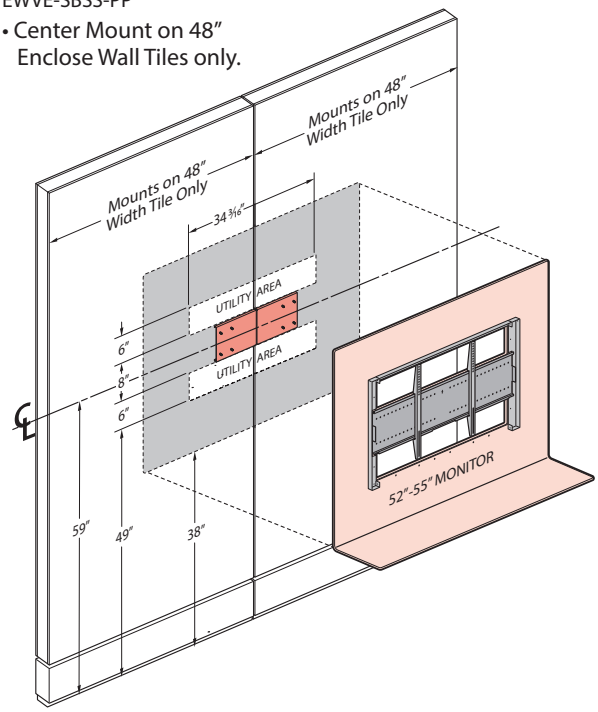


### With Shroud – 65”-70” Single Monitor
EWVE-SCSS-PP

- Center mount on 48” Enclose Wall Tiles only.

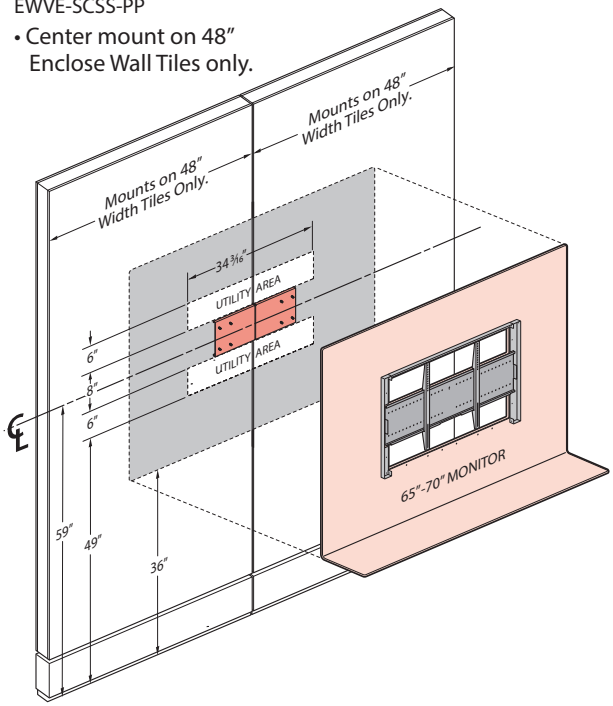


Note

- **The dimensions listed above are the recommended mounting heights for positioning utilities on an Enclose Wall, actual mounting height may vary depending on application.**
- **The monitor and any other mounted equipment such as video conferencing camera may not exceed the wall mounted units 100lbs. maximum load capacity.**
- **workware view Enclose wall mount units may only be used with the Enclose wall tile widths listed above. Contact the solutions group if it is necessary to mount units on Enclose Wall Tiles with a different width.**

# Product Details – workware view Wall Mount

## Enclose Walls – Center Mount Application – Dual Monitors

### Center Mount Application – Centers each half of the unit on one seam of an Enclose Wall.

- The center mount application for dual monitors mounts two Enclose Wall Mounting Brackets on a single Enclose wall seam on the right side and the left side to support each half of the unit.
- Mounting Bracket/Shroud must be properly anchored to an Enclose Wall; anchors are not provided and must be field supplied based upon type of Enclose wall surface (wood,drywall, metal, laminate, fabric); wall tile will be defaced.
- Audio Video, Power and Data Receptacles should be placed in the Utility Area to line up with the utility cutouts in the shroud (the size and position of the utility area is the same on all workware view units with shroud).
- This application supports two monitors with a 100 lbs. maximum weight limit for each monitor.

1. **Enclose Walls Mounting Brackets**
2. **Internal Vertical Frame Member**
   - Includes integrated mounting slots.
   - Slots located at 1" intervals.
3. **Removable Enclose Tiles**
4. **workware view – Enclose Walls – Proud Mount**
5. **Utility Areas – for Shroud Utility Cutouts**
   - Audio, video, power and data receptacles should be placed in the Utility Area to line up with the utility cutouts in the shroud.

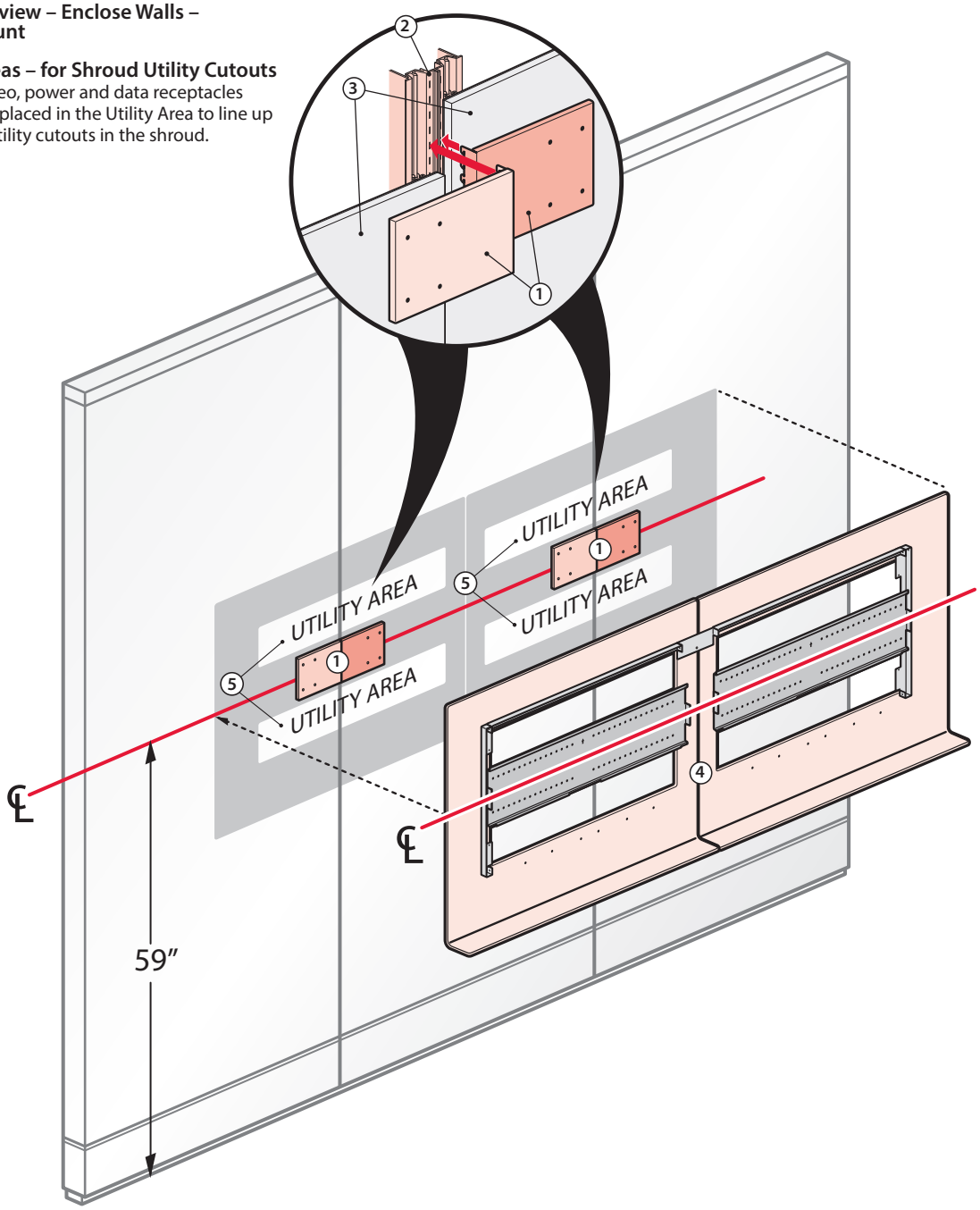

# Product Details – workware view Wall Mount

## Enclose Wall – Center Mount Application – Dual Monitor

### With Shroud – 46”- 47” Dual Monitor

• Center Mount on 42”
Enclose Wall Tiles only.

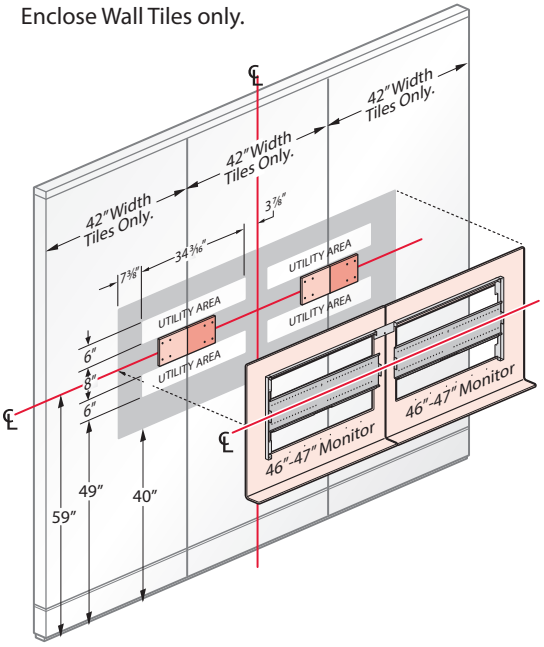


### With Shroud – 52”- 55” Dual Monitor

• Center Mount on 48”
Enclose Wall Tiles only.

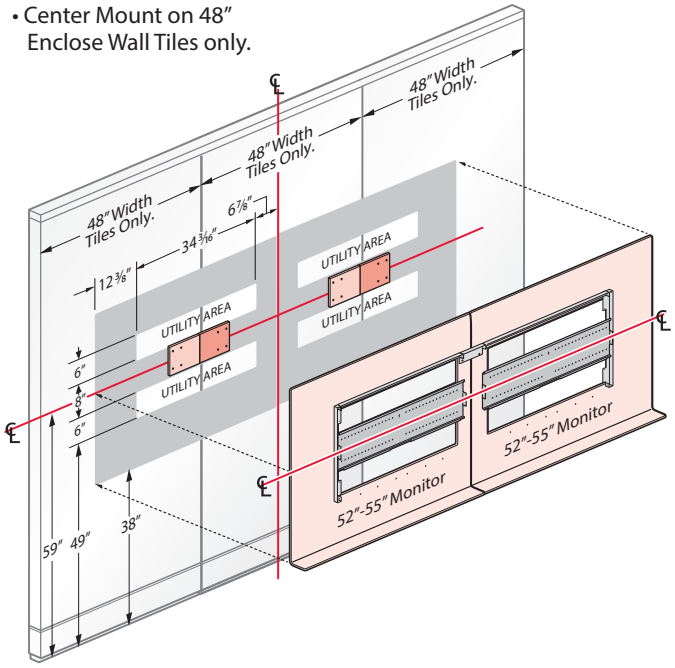


### With Shroud – 65”-70” Dual Monitor

• Center mount on 48”
Enclose Wall Tiles only.

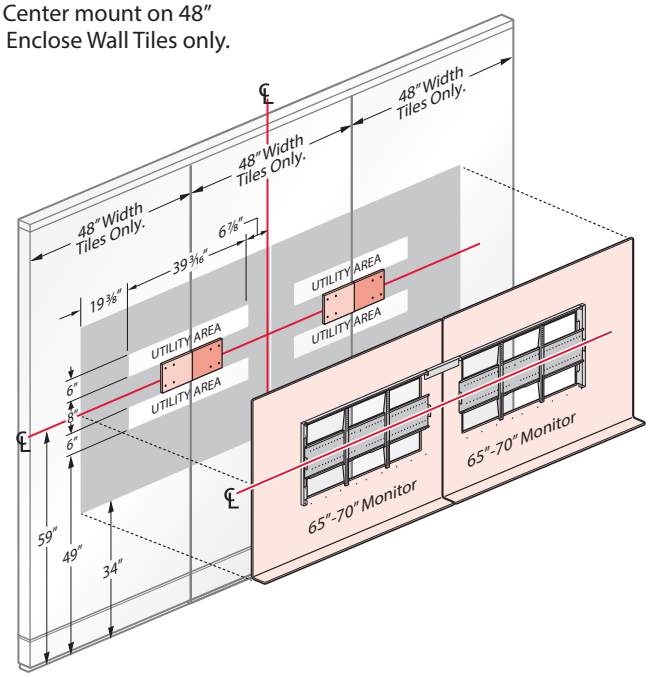


Note

- **The dimensions listed above are the recommended mounting heights for positioning utilities on an Enclose Wall, actual mounting height may vary depending on application.**
- **The monitor and any other mounted equipment such as video conferencing camera may not exceed the wall mounted units 100lbs. maximum load capacity (Dual monitor units can support a maximum load capacity of 100lbs on each half).**
- **workware view Enclose wall mount units may only be used with the Enclose wall tile widths listed above. Contact the solutions group if it is necessary to mount units on Enclose Wall Tiles with a different width.**

# Product Details – workware view Wall Mount

## Enclose Walls – Side Rail Mount Application – Single Monitor

### Side Rail Mount Application – Centers the unit on one Enclose Wall tile.

- The side rail mount application for single monitors mounts two Enclose Wall Mounting Brackets on each side of an Enclose Wall tile to support the unit.
- Mounting Bracket/Shroud must be properly anchored to an Enclose Wall; anchors are not provided and must be field supplied based upon type of Enclose wall surface (wood,drywall, metal, laminate, fabric); wall tile will be defaced.
- Audio Video, Power and Data Receptacles should be placed in the Utility Area to line up with the utility cutouts in the shroud (the size and position of the utility area is the same on all workware view units with shroud).
- This application supports one monitors with a 100 lbs. maximum weight limit.

① **Enclose Walls Mounting Brackets**

② **Internal Vertical Frame Member**
- Includes integrated mounting slots.
- Slots located at 1″ intervals.

③ **Removable Enclose Tiles**

④ **workware view – Enclose Walls – Proud Mount**

⑤ **Utility Area – for Shroud Utility Cutouts**
- Audio, video, power and data receptacles should be placed in the Utility Area to line up with the utility cutouts in the shroud.

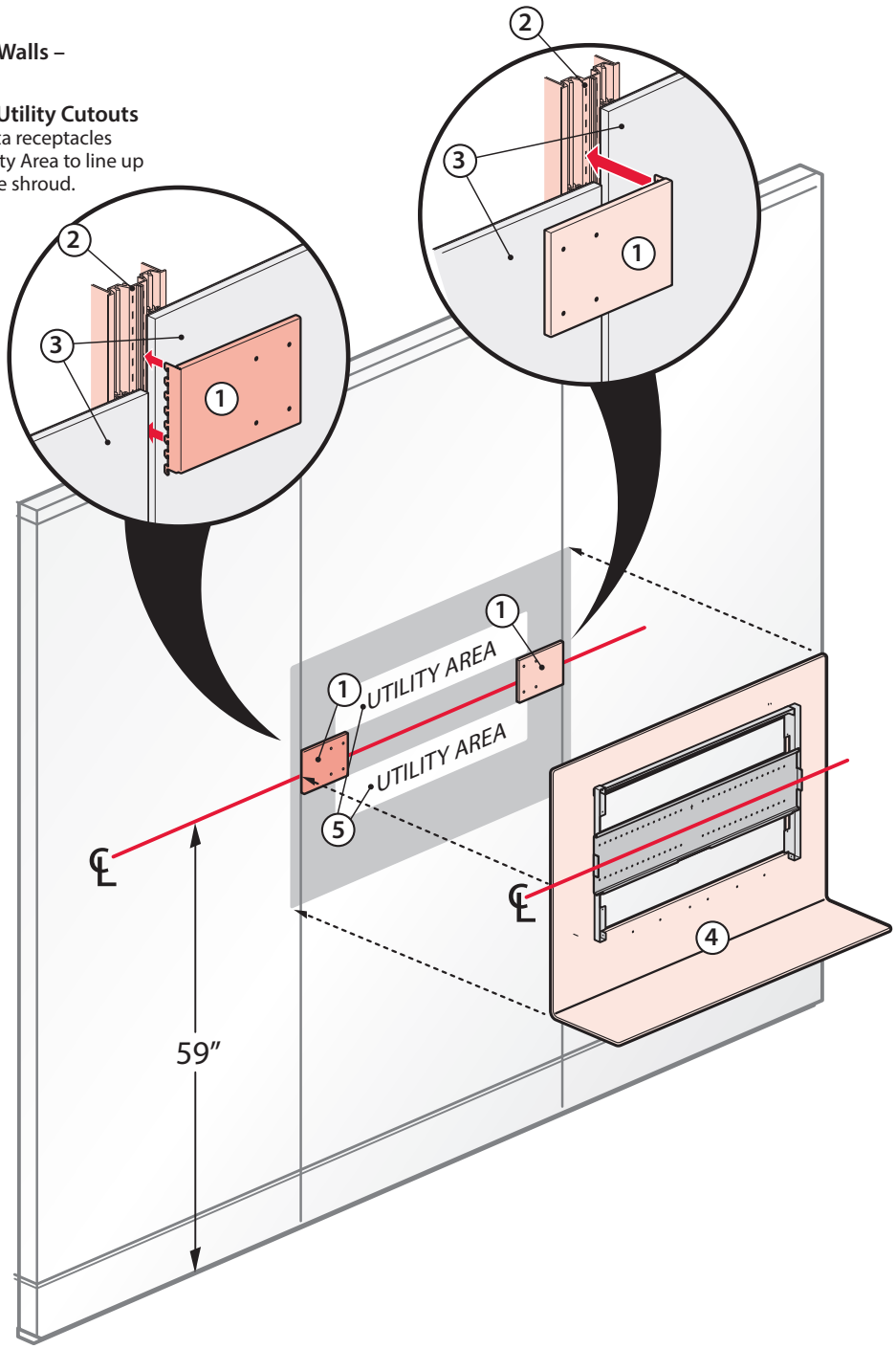

# Product Details – workware view Wall Mount

## Enclose Walls – Side Rail Mount Application – Single Monitor

### Without Shroud – 46”-70” Single Monitor

- Side rail mounts on 24” to 48” wide Enclose Wall Tiles only (tile width must be in increments of 1”).

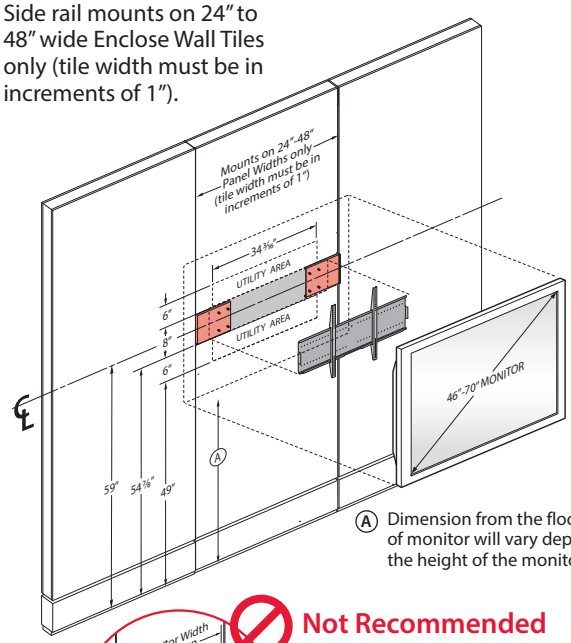


Ⓐ Dimension from the floor to bottom of monitor will vary depending on the height of the monitor

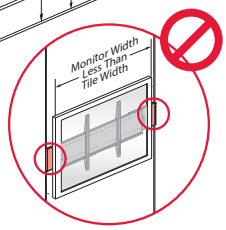


**Not Recommended**

The Enclose Wall Mounting Brackets may be exposed if the overall width of the monitor is less than the width of the Enclose Wall Tile. Confirm the overall width of the monitor and the width of the Enclose Wall Tile for this type of application.

### With Shroud – 46”-47” Single Monitor

- Side rail mounts on 42” Enclose Wall Tiles only.

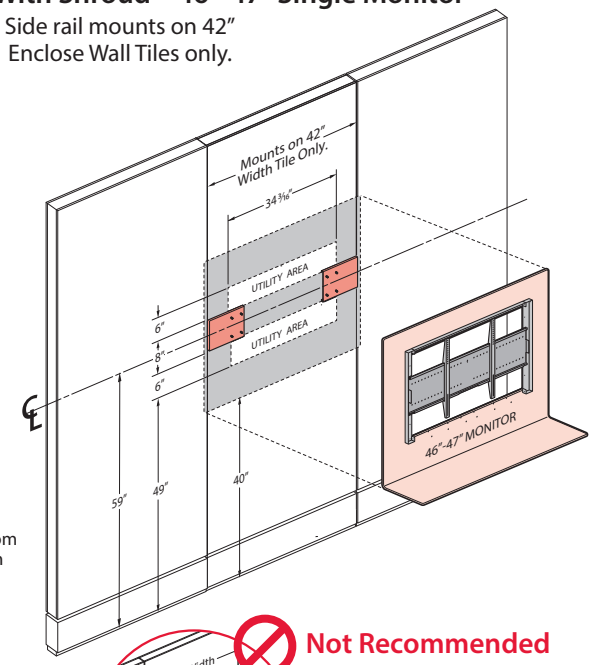


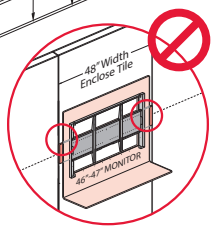


**Not Recommended**

Enclose wall brackets will be exposed when mounting workware view for 46”-47” monitors on a 48” Enclose wall tile.

### With Shroud – 52”-55” Single Monitor

- Side rail mounts on 42” or 48” Enclose Wall Tiles only.

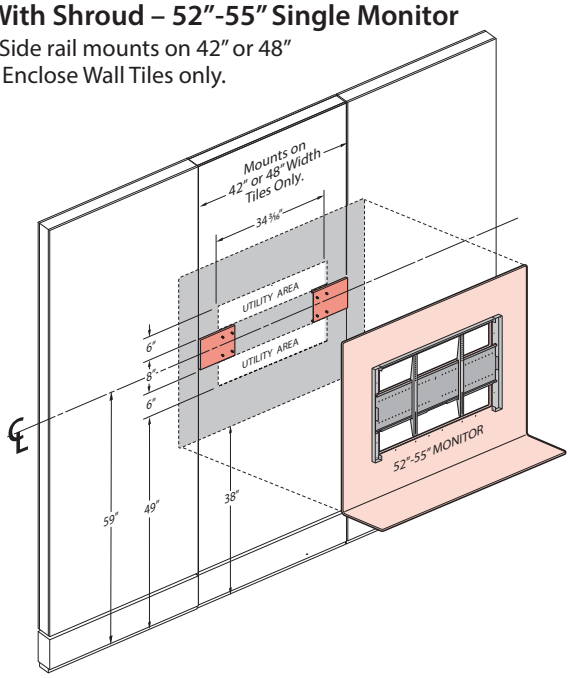


### With Shroud – 65”-70” Single Monitor

- Side rail mounts on 42” or 48” Enclose Wall Tiles only.

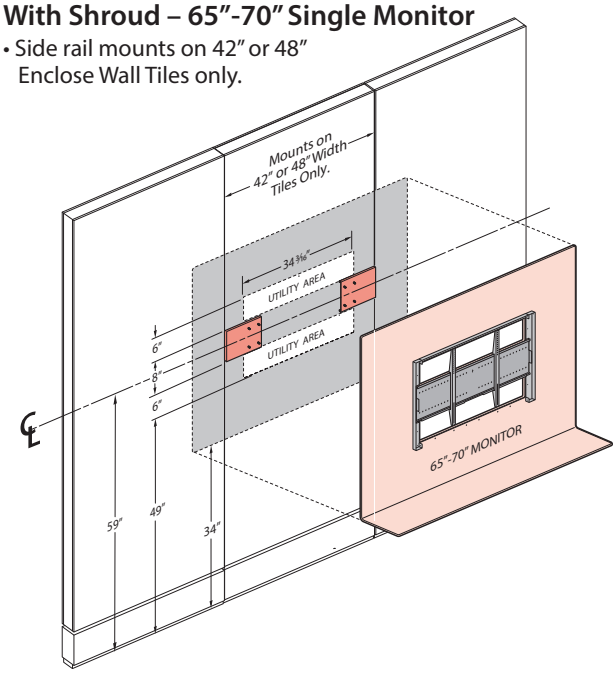


Note

- **The dimensions listed above are the recommended mounting heights for positioning utilities on an Enclose Wall, actual mounting height may vary depending on application.**
- **The monitor and any other mounted equipment such as video conferencing camera may not exceed the wall mounted units 100lbs. maximum load capacity.**
- **workware view Enclose wall mount units may only be used with the Enclose wall tile widths listed above. Contact the solutions group if it is necessary to mount units on Enclose Wall Tiles with a different width.**

# Product Details – workware view Wall Mount

## Enclose Walls – Side Rail Mount Application – Dual Monitors

### Side Rail Mount Application – Centers each half of the unit on one Enclose Wall tile.

- The side rail mount application for dual monitors mounts two Enclose Wall Mounting Brackets on each side of an Enclose Wall tile to support each half of the unit.
- Mounting Bracket/Shroud must be properly anchored to an Enclose Wall; anchors are not provided and must be field supplied based upon type of Enclose wall surface (wood,drywall, metal, laminate, fabric); wall tile will be defaced.
- Audio Video, Power and Data Receptacles should be placed in the Utility Area to line up with the utility cutouts in the shroud (the size and position of the utility area is the same on all workware view units with shroud).
- This application supports two monitors with a 100 lbs. maximum weight limit for each half of the unit.

① **Enclose Walls Mounting Brackets**

② **Internal Vertical Frame Member**
- Includes integrated mounting slots.
- Slots located at 1″interval

③ **Removable Enclose Tiles**

④ **workware view – Enclose Walls – Proud Mount**

⑤ **Utility Area – for Shroud Utility Cutouts**
- Audio, video, power and data receptacles should be placed in the Utility Area to line up with the utility cutouts in the shroud.

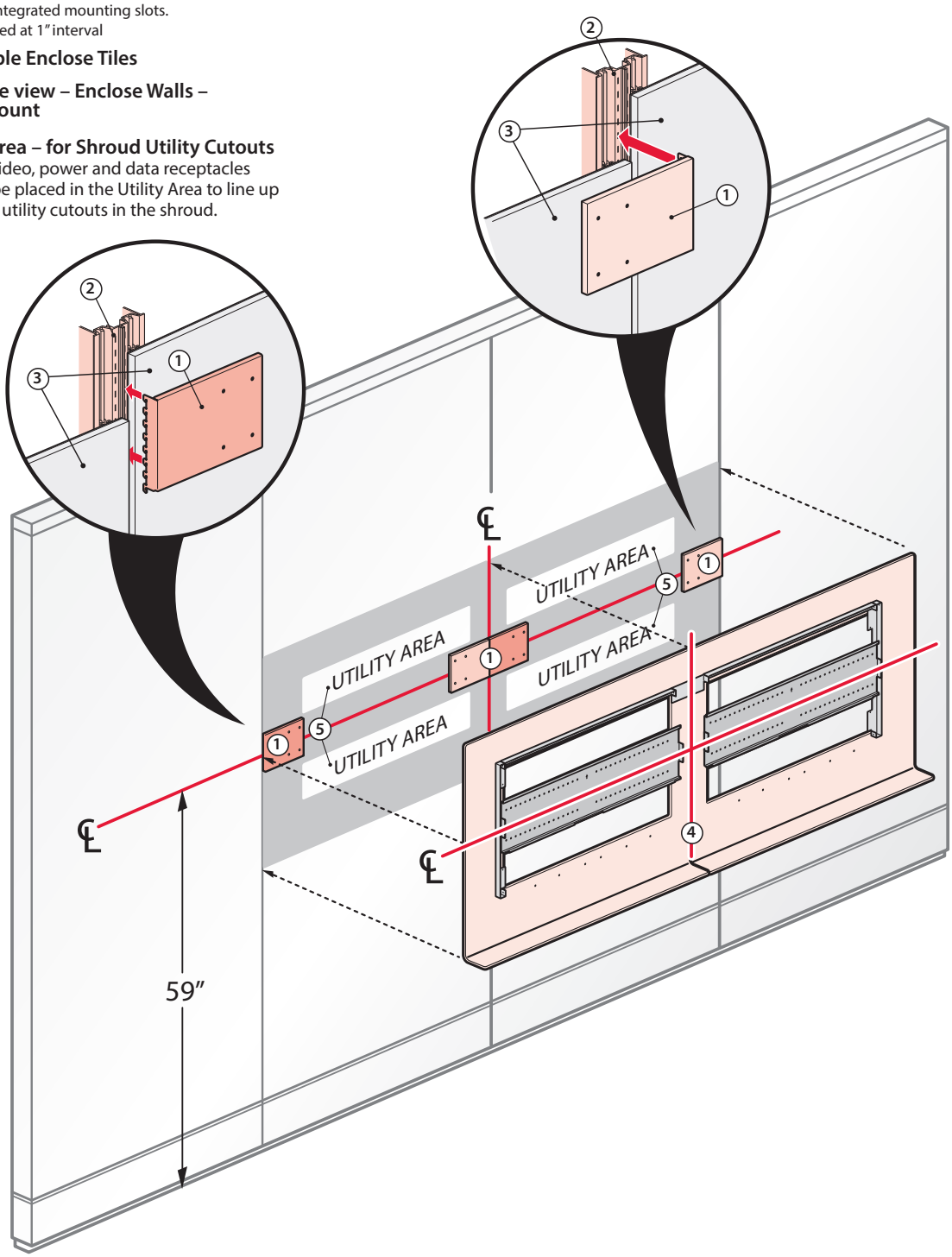

# Product Details – workware view Wall Mount

## Enclose Walls – Side Rail Mount Application – Dual Monitors

### With Shroud – 46”-47” Dual Monitor

- Side Rail Mount on 42” Enclose Wall Tiles only.

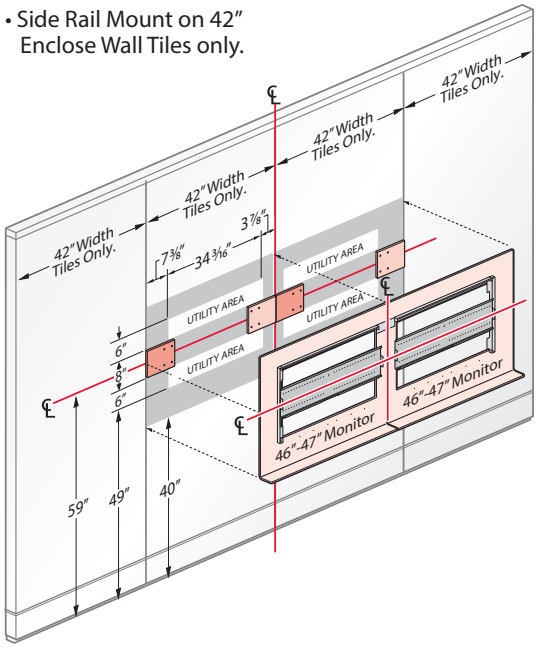


### With Shroud – 52”-55” Dual Monitor

- Side Rail Mount on 48” Enclose Wall Tiles only.

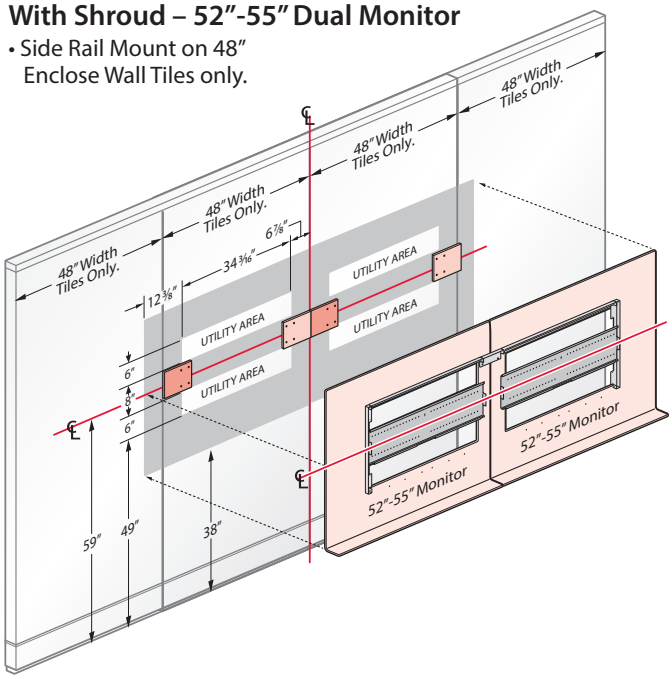


### With Shroud – 65”-70” Dual Monitor

- Side Rail mount on 48” Enclose Wall Tiles only.

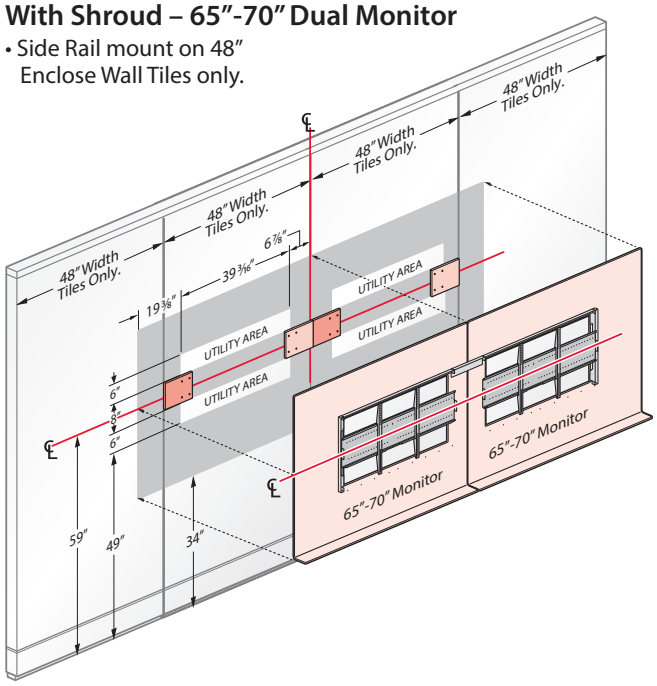


Note

- **The dimensions listed above are the recommended mounting heights for positioning utilities on an Enclose Wall, actual mounting height may vary depending on application.**
- **The monitor and any other mounted equipment such as video conferencing camera may not exceed the wall mounted units 100lbs. maximum load capacity (Dual monitor units can support a maximum load capacity of 100lbs on each half).**
- **workware view Enclose wall mount units may only be used with the Enclose wall tile widths listed above. Contact the solutions group if it is necessary to mount units on Enclose Wall Tiles with a different width.**

# Product Details – workware view Wall Mount

## Structural Walls Mounting Application

- workware view – Structural Walls Proud Mount can be attached to structural walls that are properly blocked with 3/4" plywood or with 2" x 4" wood studs behind the drywall.
- Mounting Bracket/Shroud must be properly anchored to a structural wall; anchors are not provided and must be field supplied.
- Field installation and structural wall modifications will be required; structural wall will be defaced.

### Recommended Mounting Height For workware view – Single Monitor – Structural Wall Mount

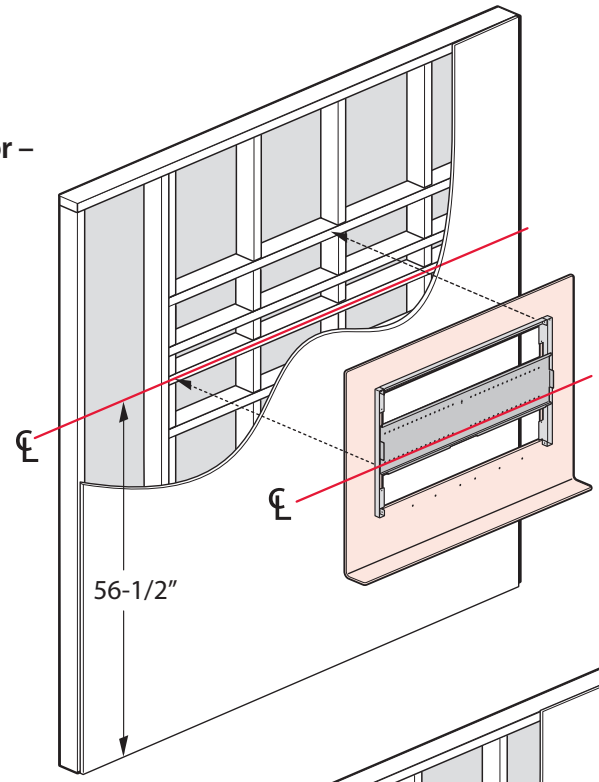


### Recommended Mounting Height For workware view – Dual Monitors – Structural Wall Mount

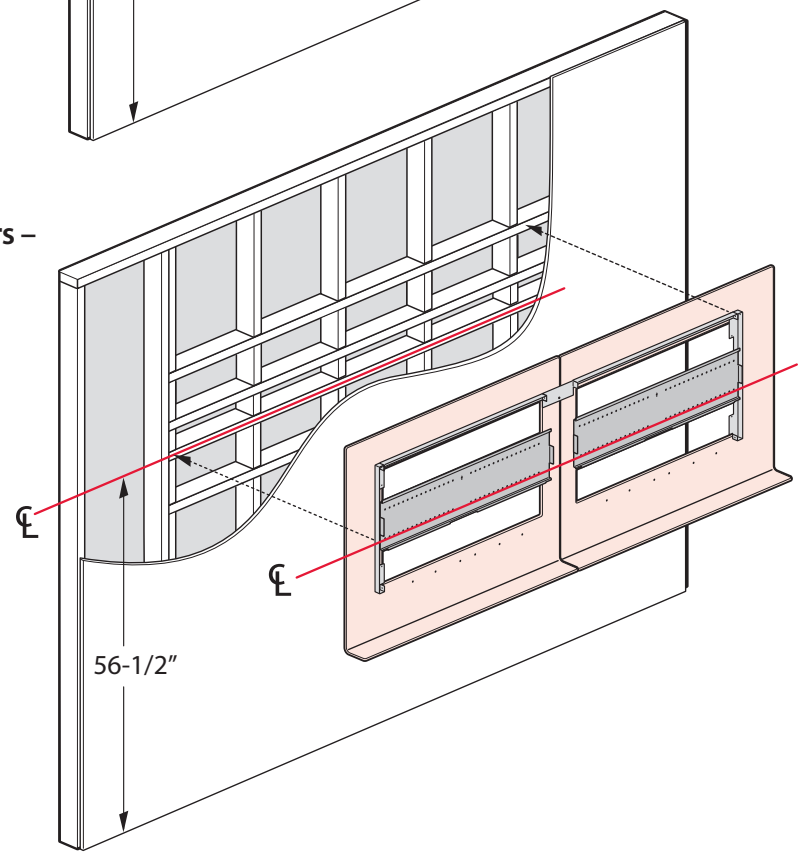


Note

- **The dimensions listed above are the recommended mounting heights, actual mounting height may vary depending on application.**
- **The monitor and any other mounted equipment such as video conferencing camera may not exceed the wall mounted units 100lbs. maximum load capacity (Dual monitor units can support a maximum load capacity of 100lbs on each half).**

# Product Details – workware view Wall Mount

## Structural Walls Mounting Application

### Utility Area Location – Single Monitor Applications

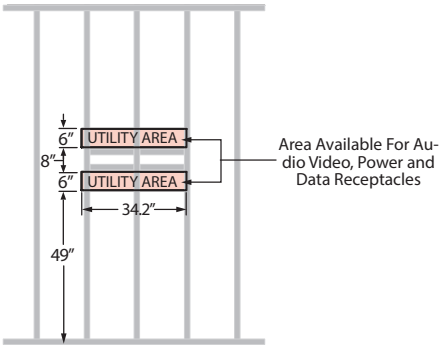


### Recommended Mounting Height For workware view Single Monitor – Structural Wall Mount without Shroud

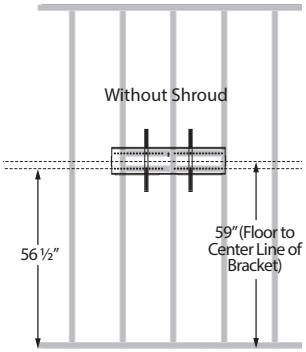


### Recommended Mounting Height For workware view Single Monitor– Structural Wall Mount with Shroud

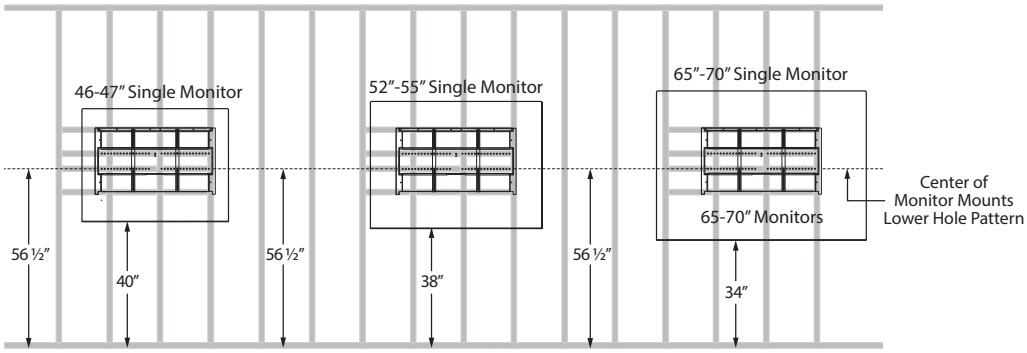


### Utility Area Locations – Dual Monitor Applications

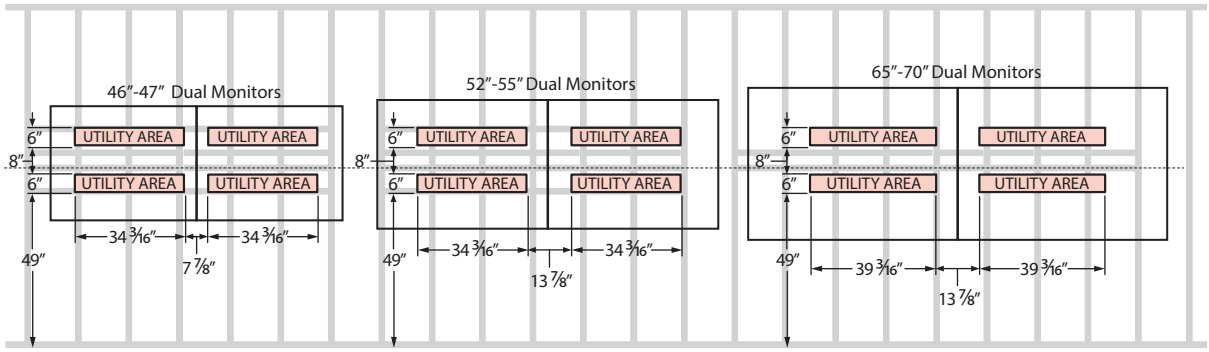


### Recommended Mounting Height For workware view Dual Monitor– Structural Wall Mount with Shroud

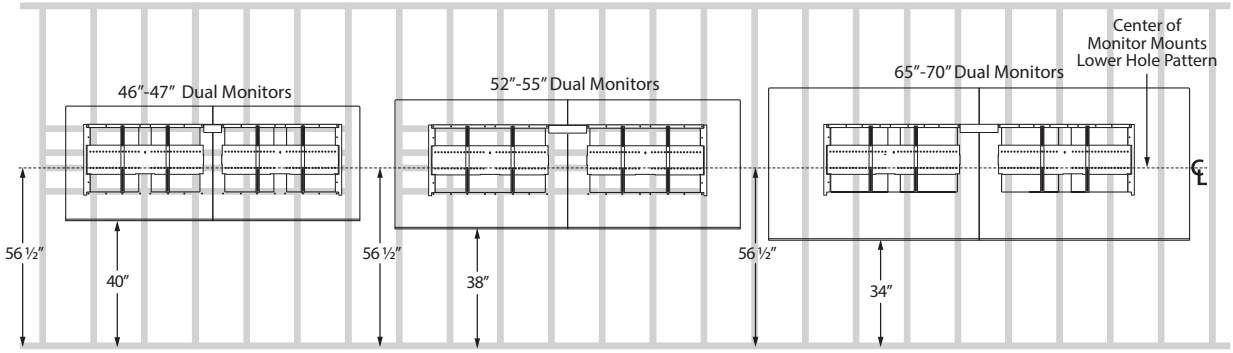


Note

- **The dimensions listed above are the recommended mounting heights, actual mounting height may vary depending on application.**
- **The monitor and any other mounted equipment such as video conferencing camera may not exceed the wall mounted units 100lbs. maximum load capacity (Dual monitor units can support a maximum load capacity of 100lbs on each half).**

# Product Details – workware view Wall Mount

## Clearance For Monitor Installation

- Once the workware view unit is properly mounted to the wall, the monitor can be installed by attaching the two (2) vertical Monitor Brackets to the VESA mounting holes on the back of the monitor and sliding both onto the Monitor Mounting Bracket from the left side or right side of the unit.
- Installation of the monitors will require a minimum of 15″ of clearance on the left or right side of the unit.
- Location and length of cables and cords may impact which side of the unit the monitor will have to be mounted on (the wiring might not reach far enough to be able to mount from either direction) because of this it is recommended that 15″ of clearance for the monitor installation be provided on both sides of the unit.

### Single Monitor Application

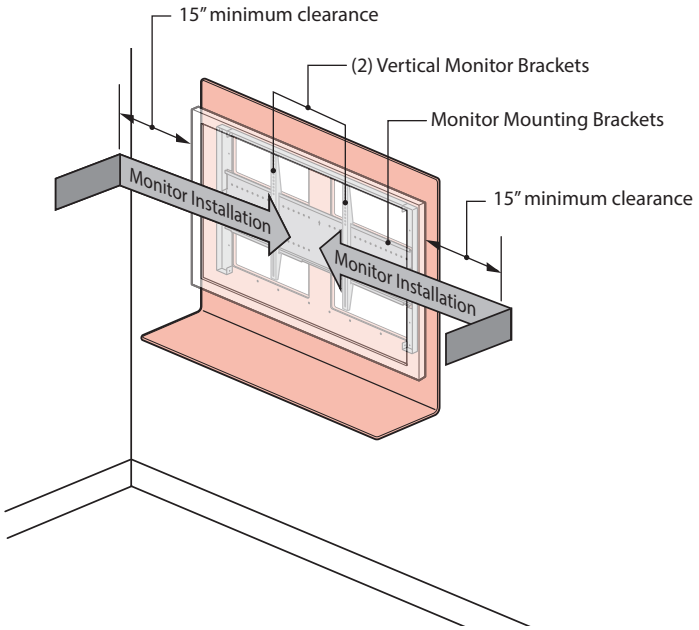


### Dual Monitor Application

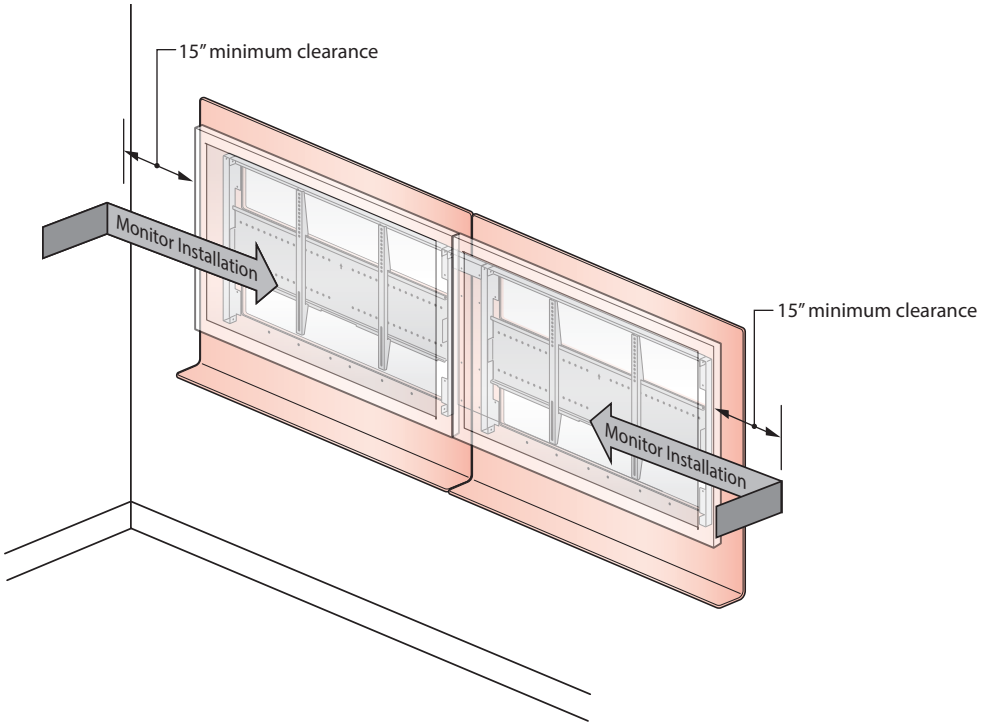

## Camera Mount Shelf (T) – Table Mount

- The Camera Mount Shelf (T) is designed to mount to the Monitor Mounting Bracket of a workware view – table mount unit It can accommodate one video conferencing camera (field supplied) on an adjustable slot.
- The Monitor Mounting Bracket has a range of Camera Mount Shelf holes to accommodate different monitor sizes. This allows the Camera Mount Shelf to be adjusted up and down in one inch increments (table mount only).
- Includes one painted steel camera mount shelf and attachment hardware - trim color is specified.
- For dual monitor units, a single Camera Mount Shelf is centered on the Monitor Mounting Bracket.

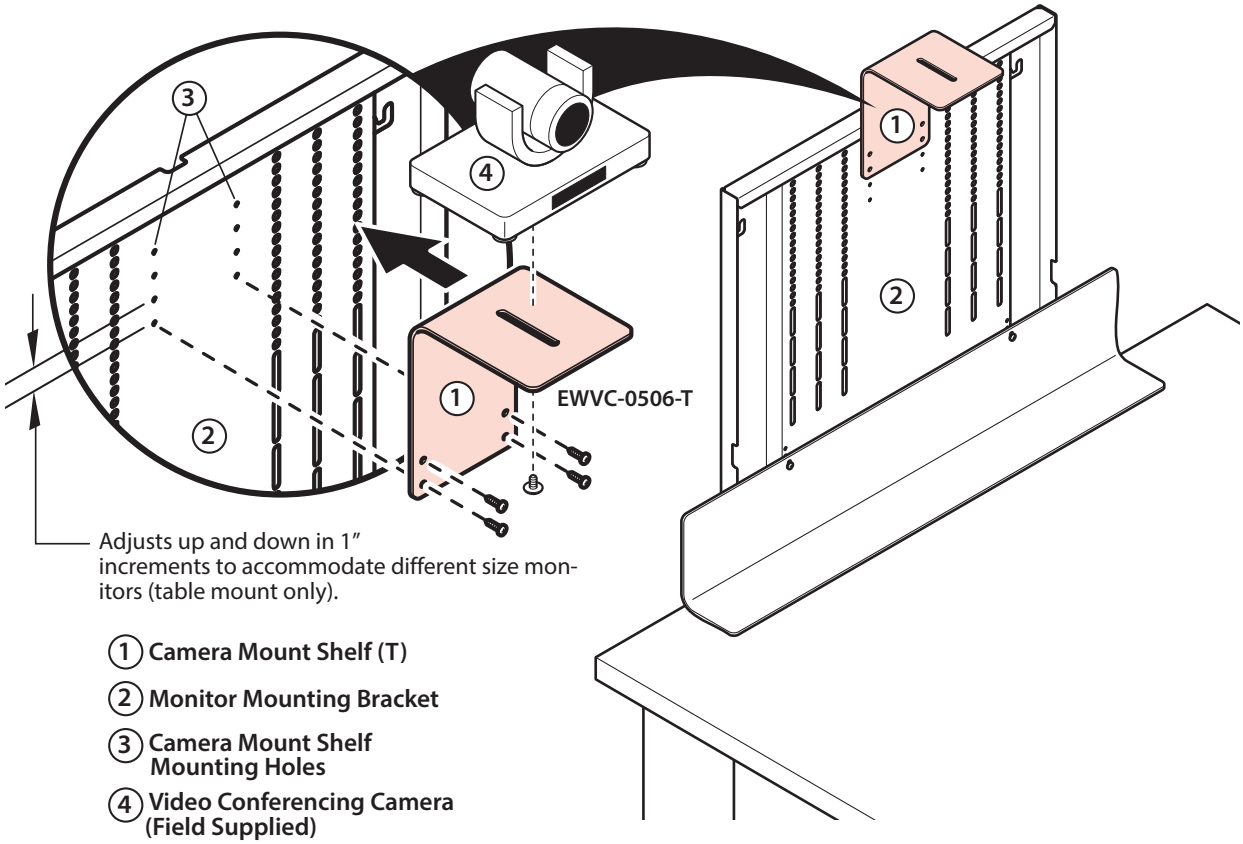


1. **Camera Mount Shelf (T)**
2. **Monitor Mounting Bracket**
3. **Camera Mount Shelf Mounting Holes**
4. **Video Conferencing Camera (Field Supplied)**

Note

- **The monitor and any other mounted equipment such as video conferencing camera may not exceed the Table mounted units 70lbs. maximum load capacity.**

# Product Details – workware Accessories – Camera Mount Shelf

## Camera Mount Shelf (W) – Enclose Wall / Structural Wall Mount

- Camera Mount Shelf (W) can only be attached to workware view – Wall Mount units with a shroud (can not be attached to units without shroud).
- It can accommodate one video conferencing camera on an adjustable slot.
- Camera Mount Shelf (W) mounts in one position above the shroud and is not adjustable.
- Includes one painted steel camera mount shelf and attachment hardware - trim color is specified.

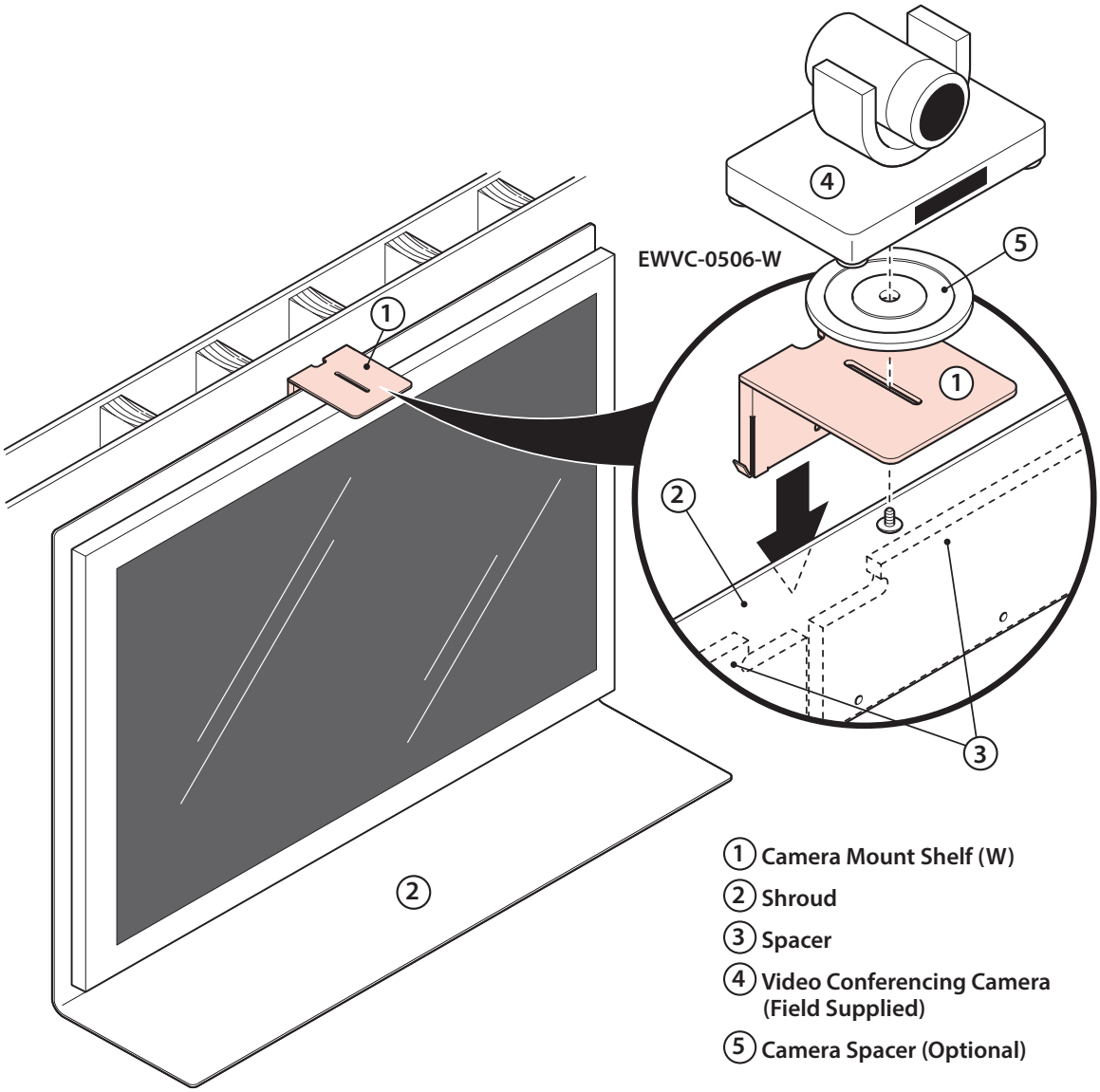


Note

- **Camera Mount Shelf (W) can only be attached to workware view – Wall Mount units with a shroud (can not be attached to units without shroud).**
- **The monitor and any other mounted equipment such as video conferencing camera may not exceed the wall mounted units 100lbs. maximum load capacity (Dual monitor units can support a maximum load capacity of 100lbs on each half).**

# Product Details – workware Accessories

## Cable Base

- Cable Bases are mounted under tables to provide internal cable management for power cords/conduit, audio/video cables and data cables. Cable Bases are recommended for use with all workware connect – Interface Modules being used in a table application to provide cable management and to house the components.
- To accommodate different table depths Cable Bases are available in two sizes (8”x14” or 14”x14”).
- The 8” x 14” Cable Base has a 3” x 8” cutout in the bottom and the 14” x 14” Cable Base has an 8” x 8” cutout to allow access to the building power, located in the floor, and both have four 1” height adjustable glides.
- Cable Bases may be ordered as an option with Planes Interior Leg and Perimeter Leg Conference Tables or they may be separately specified.
- The Cable Base is a dual purpose component. In addition to providing power and data cable management, it can also provide table floor support. Cable Base locations on Planes Conference Tables are predetermined for support and load purposes. If the Cable Base is ordered as an option, tables are pre-drilled for field installation of legs and the Cable Base. If the Cable Base is ordered as an accessory, it must be installed according to installation instructions and field drilling is required.

**14" x 14" Cable Base**
TA01-1414-_

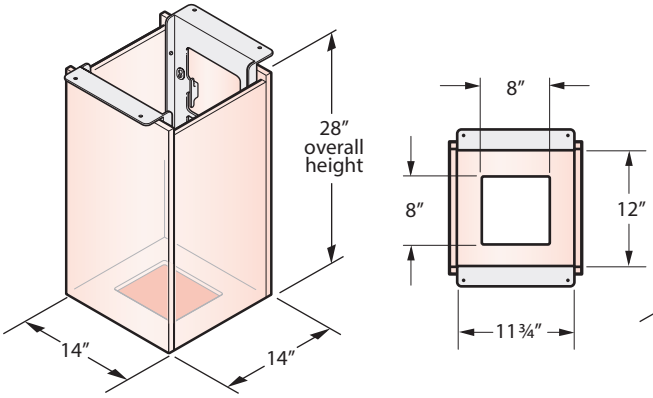


**8" x 14" Cable Base**
TA01-0814-_

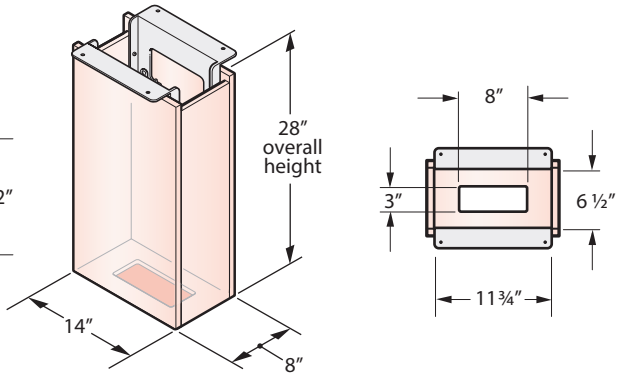


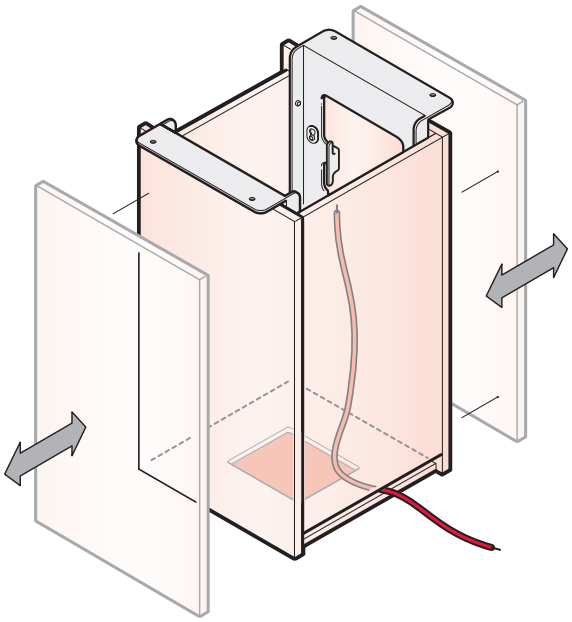

- Two Cable Base side panels can be removed for easy access to the interior.
- Two recessed panels on the sides of the Cable Base can be moved up to allow for a 1" pass through under the side panels. Routing cables below the recessed side panel(s) will reduce the top cable access space, preventing a Horizontal Cable Manager from passing through the top of the Cable Base.
- The brackets on the top of the Cable Base will screw to the bottom of the table. The Cable Base must either be centered under the table or span the seam of a table.
- The top of the Cable Base allows for 2 ½” cord access. The interior frame of the Cable Base will allow cables to be wrapped around it for better cable management.

### Cable Base Recommendations For Knee Space Clearance:

- 8” x 14” Cable Base not recommended for tables less than 36” deep.
- 14” x 14” Cable Base not recommended for tables less than 42” deep.

Note
- A separately specified Processor Bracket (EWCX-BRPR) is required for applications with using the 8”x14” Cable Base and the switching Interface Module. The Processor Bracket would support the Processor on the underside of the tabletop to allow clearance for the user audio/video cables (HDMI or VGA+Audio) inside the 8”x14” Cable Base.

# Product Details – workware Accessories

## Cable Base Cable Retractor

- The Cable Retractor is for use with the workware connect – Interface Module to provide easy access and storage of user audio/video cables (Interface Module and audio/video cables are separately specified).
- The Cable Retractor is mounted with brackets to the underside of a tabletop and is concealed inside a separately specified Planes Cable Base (8"x14" or 14"x14").
- Chutes prevent User audio/video cables from becoming tangled. Weights inside each chute retract the cables back into the unit providing 34" of cable travel.
- Each chute can only accommodate a single cable with a maximum diameter of 1/4".
- The workware Processor may be mounted on the Cable Retractor inside 14" x 14" Cable Bases only. 8"x14" Cable Bases require a separately specified Processor Bracket (EWCX-BRPR) to mount the processor outside of the Cable Base.

### Cable Base Cable Retractor Application

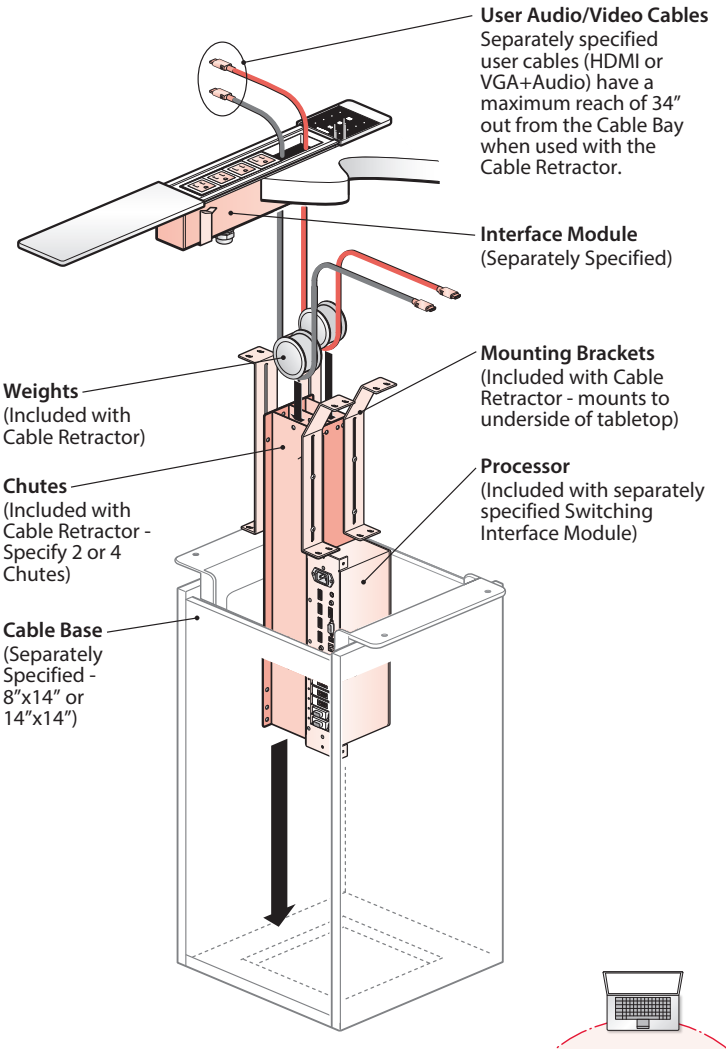


### Cable Base Cable Retractor – 2 Cable Chutes

EWCX-BRWM-2A

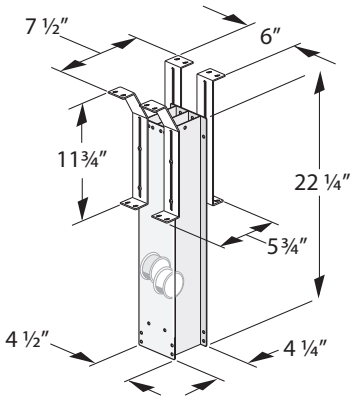


### Cable Base Cable Retractor – 4 Cable Chutes

EWCX-BRWM-4A

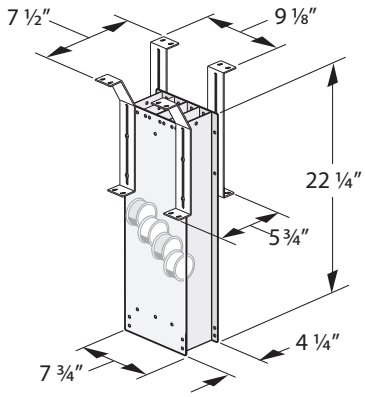


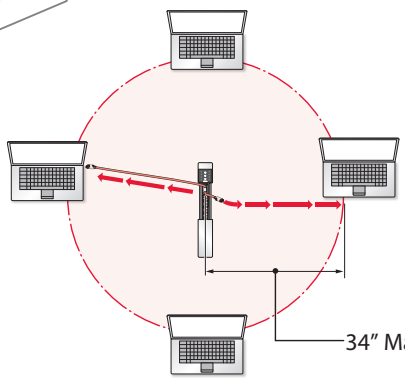


### 34" Maximum Cable Reach

User Audio/Video Cables (HDMI or VGA+Audio) reach a maximum of 34" out from the Cable Bay when used with the Cable Retractor.

Note
- Maximum reach of User Audio/ Video Cables using the Cable Base Cable Retractor is 34" from the Cable Bay.
- A separately specified Processor Bracket (EWCX-BRPR) is required for applications using the 8"x14" Cable Base and the switching Interface Module. The Processor Bracket would support the Processor on the underside of the table-top to allow clearance for the user audio/video cables (HDMI or VGA+Audio) inside the 8"x14" Cable Base.

# Product Details – workware Accessories

## Cable Column

- The Cable Column is vertical routing of cables and cords. Will not accept workware processor or wireless module.
- Not recommended for housing user audio/video cables (HDMI/VGA+Audio). The limited size would make accessing and retracting cables difficult.
- Cable Column is non-load bearing and does not replace table leg(s).
- Cable Columns can be installed anywhere under a conference table unless it would interfere with table legs, kneespace clearance, workware components or other cable management components.
- Includes one Cable Column with mounting hardware for attaching to table underside.
- Does not include hardware for attaching to the floor; field supplied.

### Cable Column Dimensions

- Overall dimensions: 2" D x 4.25" W x 28" H.
- Floor Mount Bracket is recessed into the Cable Column with a 1" height adjustable range. When Floor Mount Bracket is fully extended the overall Cable Column height is 29" H.
- Field removable opening in floor mount bracket is 2.16" W x 2.25" H. The Cable Column frame may be field cut to allow extended Floor Mount Bracket cutout.

**Cable Column: Assembled**

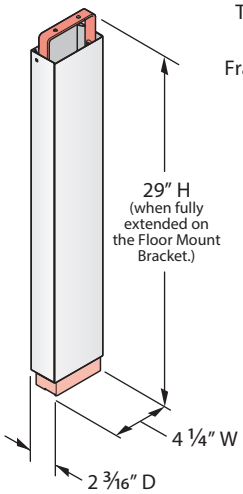


**Cable Column: Exploded View**

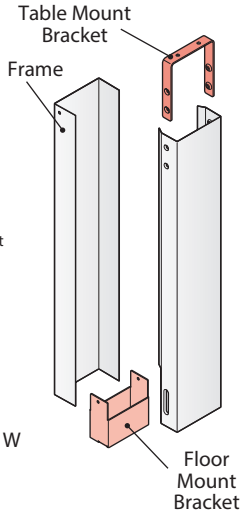


## Cable Column Application

The Cable Column is always attached beneath the table top and anchored to the building. Accessing the building power supply through the Cable Column can be done in two ways.

### Application A

Cables exit the Cable Column directly through the bottom of the floor mount bracket. The bottom of the floor mount bracket is open.

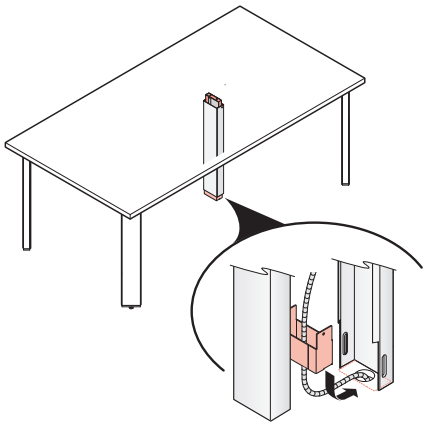

### Application B

Cables exit the Cable Column through the side of the floor mount bracket. The tab located on the bracket must be field removed, resulting in a 1" H opening. The Floor Mount Bracket can be field cut, resulting in a 2.25" H opening.

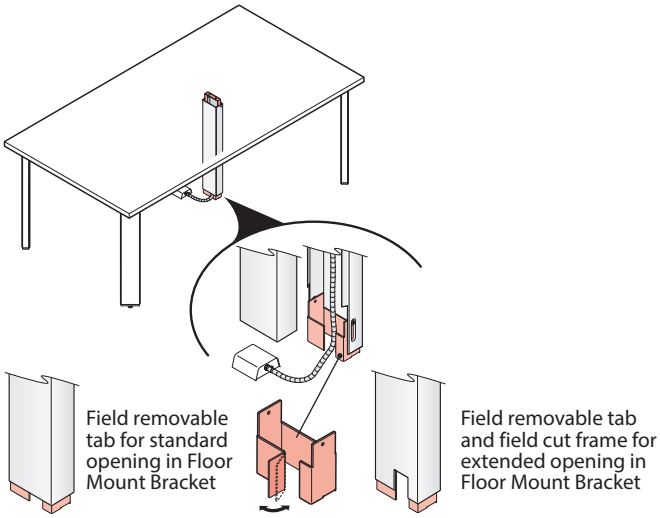


## Cable Column Fill Capacity

| Cable Pathway for Floor Mount Bracket | SQ. INCHES | CABLE CAPACITY 60% FILL* (CABLE GAUGE) | | | CABLE CAPACITY 40% FILL* (CABLE GAUGE) | | |
|---|---|---|---|---|---|---|---|
| | | 0.20" | 0.25" | 0.30" | 0.20" | 0.25" | 0.30" |
| Routing through Base of Floor Mount Bracket (Application A) | 4.95 | 94 | 60 | 42 | 63 | 40 | 28 |
| Routing through standard opening in floor mount bracket (application B) | 2.17 | 41 | 26 | 18 | 27 | 17 | 12 |
| Routing through field cut extended opening in floor mount bracket (Application B) | 5.04 | 96 | 61 | 42 | 64 | 41 | 28 |

*TIA/EIA 569A suggests a cable fill capacity of 40% for planning and up to 60% for unplanned future additions.

# Product Details – workware Accessories

## Wire Manager – Horizontal

- The Horizontal Wire Manager is recommended for routing power, data and audio/video cabling horizontally under a table.
- Manage cables between the Interface Module, Processor, Power Relay Cord and the monitor.
- The Horizontal Wire Manager is plastic and can be cut to length in the field.
- The Horizontal Wire Manager will house up to 27, 0.3" diameter, cords at a 40% fill.
- The Horizontal Wire Manager snaps over the attachment clips after they are installed under the table. Attachment clips may be installed a maximum of 24" apart.
- The Horizontal Wire Manager is a handed component; the cables can exit from the either end or from the lower side for lay-in cabling, depending on application.

**Wire Manager – Horizontal**
EUAW-00_ _-NH

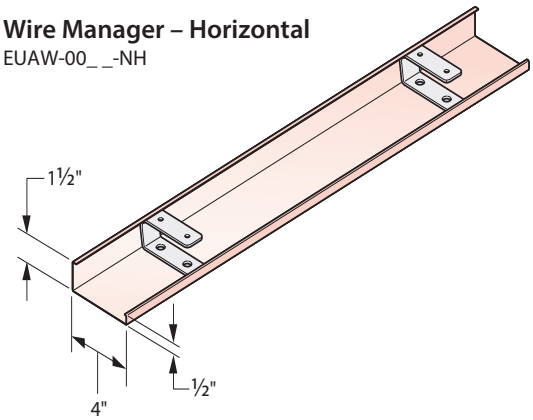


**Number of Attachment Clips Shipped with Horizontal Wire Manager**

| HORIZONTAL WIRE MANAGER LENGTH | # OF CLIPS |
|---|---|
| 48" | 5 |
| 72" | 7 |
| 96" | 9 |
| 120" | 11 |

Note For field cut applications, refer to chart to determine if additional attachment clips are needed.

**Wire Manager – Horizontal Typical Application**

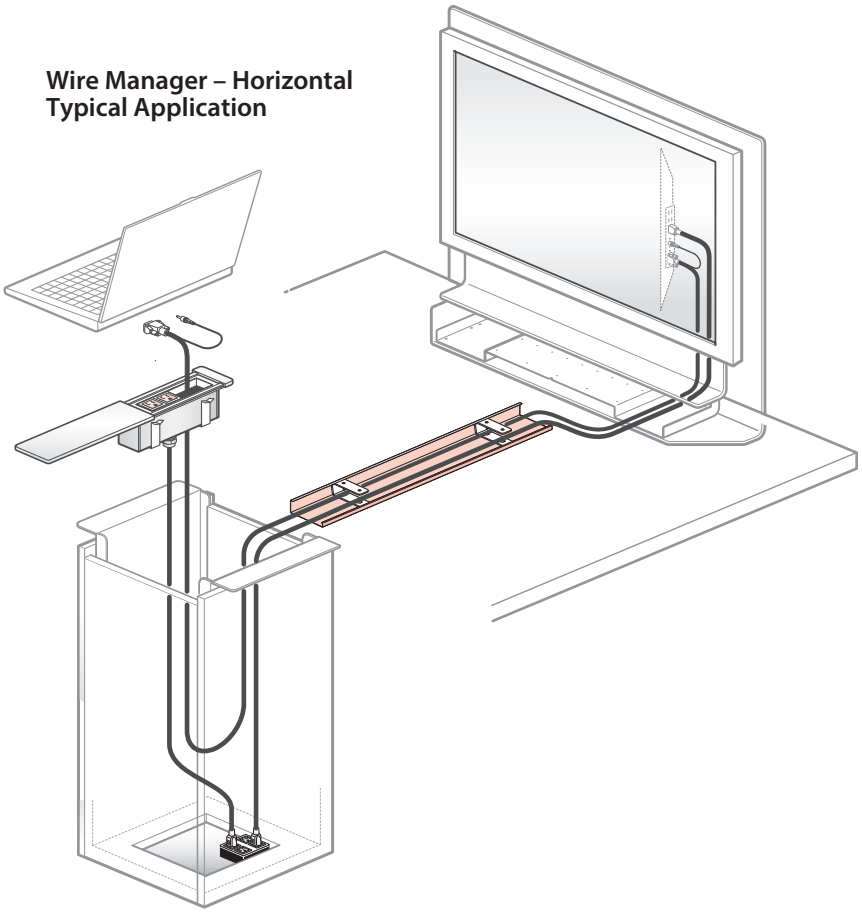

# Product Details – workware Accessories

## Processor Mounting Bracket

- The Processor Mounting Bracket mounts to the underside of a tabletop to support the Processor (the Processor is included with the separately specified Switching Interface Module).
- Recommended for use with applications using the 8″ x 14″ Cable Bases.
- 16″ Minimum distance required between the cable base and the workware view – Table Mounted unit for mounting the Processor Mounting Bracket.
- Table Mounted workware view – Requires a minimum of 16″ clearance between the Cable Base and the table mounted workware view unit for mounting the Processor Mounting Bracket.
- Wall Mounted workware view – Requires a minimum of 16″ clearance between the Cable Base and the edge of the table for mounting the Processor Mounting Bracket.
- Since the bracket extends 3″ below the bottom of the tabletop, bracket should be positioned to avoid knee clearance issues.

### Processor Mounting Bracket – Dimensions

EWCX-BRPR

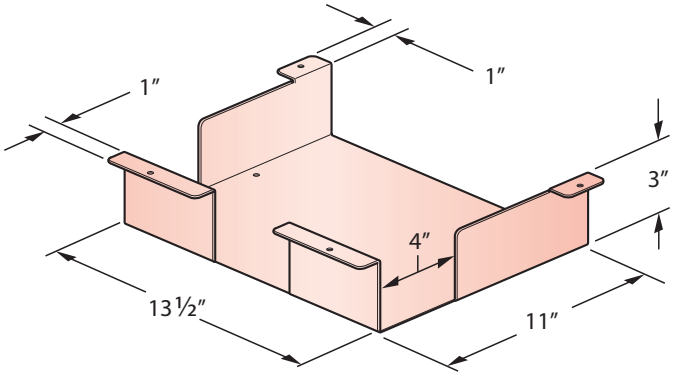


### Space Requirements for Mounting

Top view – Parallel To Interface Module

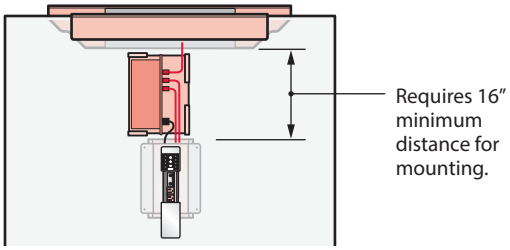


Top View – Perpendicular To Interface Module

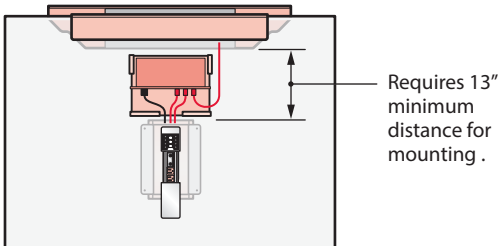


### Typical Processor Mounting Bracket Application

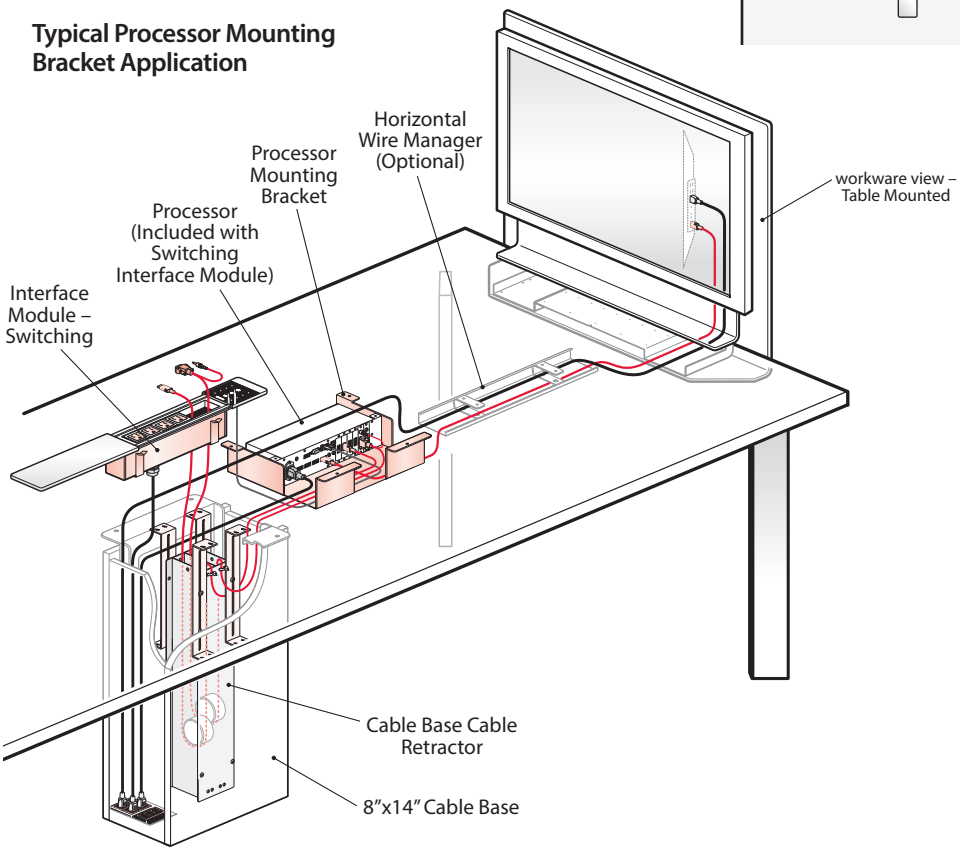

**This page intentionally left blank.**

# Product Application – workware

# Product Application – Overview of workware Technology Applications

- To meet the needs of different users workware connect may be specified using any of these 4 levels of connectivity. Each solution is flexible and scalable offering a choice cabled sharing or wireless sharing or a combination of both.
- Each application requires a different combination of workware components that must be specified.

## cable sharing (No Touch Control)

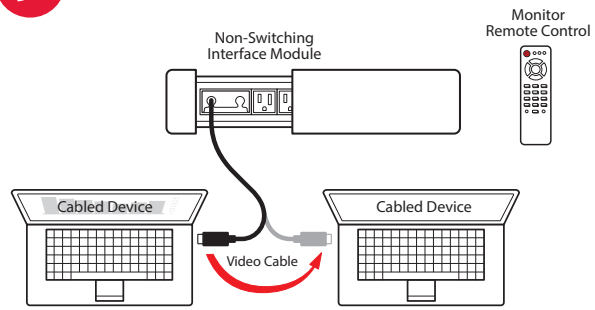


### Method for Sharing Presentations:
(How users share their presentation on the Monitor)
- **Cable Sharing** – Presenters use a single audio/video cable connected directly to each monitor, this provides audio/video access to the monitor to share presentations.

### Method for Switching Between Presenters:
(How users switch the monitor presentation to other users)
- **Physical Cable Switching** – Users switch between presenters by disconnecting the audio/video cable from the first user's device and connecting it to the second user's device.

### Method for Controlling Monitor Power:
- **Remote Control** – Monitor power is controlled using the monitor remote control (field supplied) or the power button on the monitor.

### Maximum Number of Connections to the Monitor :
- **Cabled Connection** – Since the audio/video cable is directly wired to the monitor this application can only provide (1) connection to each monitor for presentations.

### Advantages:
- Simple configuration and operation.
- Plug and play access for devices - no software needed.
- Does not require building network access or configuration.
- Better for smaller groups of presenters.

### Considerations:
- Presenters must be within reach of cables.
- Not recommended for Video Conferencing applications.
- Does not support the Quad View feature.
- Limited number of connections to monitor.
- Switching between users is slower and more cumbersome.
- Relies on Remote Control to turn monitor on and off.

NON SWITCHING

Specify with
Non-Switching
Interface Module

## cable sharing with touch control

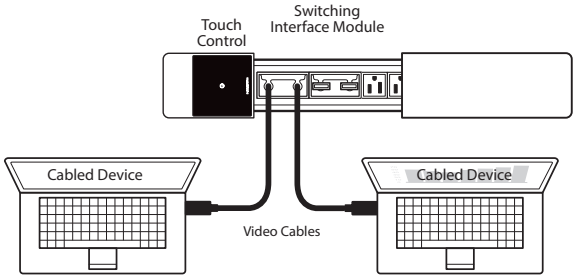


### Method for Sharing Presentations:
(How users share their presentation on the Monitor)
- **Cabled Sharing With Touch Control** – Presenters may access the monitor to share a presentation by connecting one of the audio/video cables to their device and activating the cables corresponding button on the Touch Control interface.

### Method for Switching Between Presenters:
(How users switch the monitor presentation to other users)
- **Touch Control Switching** – Users may switch the monitor presentation to other users by activating the corresponding button on the Touch Control interface.

### Method for Controlling Monitor Power:
- **Touch Control** – Monitor power is controlled using the power button on the Touch Control.

### Maximum Number of Connections to the Monitor :
- **Cabled Connections** – The Switching Interface Module can accommodate a maximum of (4) audio/video cables from each processor.

### Advantages:
- Plug and play access for devices - no software needed.
- Does not require building network access or configuration.
- The Touch Pad allows the monitor presentations to be switched between multiple users.
- The Touch Pad allows users to control monitor power.
- Features a Video Conferencing Mode (when field supplied Video Conferencing Equipment is connected).

### Considerations:
- Presenters must be within reach of cables.
- Does not support the Quad View feature.
- Limited number of connections to monitor.

SWITCHING

Specify with
Switching
Interface Module

## wireless sharing

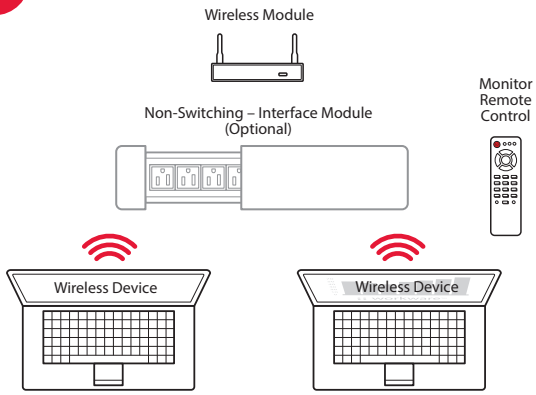


### Method for Sharing Presentations:
(How users share their presentation on the Monitor)
- **Wireless Sharing** – Presenters use workware's Wireless Presentation Software to access the building's wireless wi-fi network which provides them with audio/video access to the monitor to share presentations.

### Method for Switching Between Presenters:
(How users switch the monitor presentation to other users)
- **Wireless Switching** – Users may switch between wireless presenters using controls on workware's Wireless Presentation Software (WPS).

### Method for Controlling Monitor Power:
- **Remote Control** – Monitor power is controlled using the monitor remote control (field supplied) or the power button on the monitor.

### Maximum Number of Connections to the Monitor:
- **workware Wireless Pro**
  – Unlimited* Simultaneous presentations of users/content.
- **workware Wireless Base**
  – Upto 10* simultaneous users presentations.
  – Upto 4* simultaneous content presentations.

**The amount of simultaneous users/content is limited to the bandwidth capabilities of the network.*

### Advantages:
- Works well with large or small groups of presenters.
- Presenters can be located anywhere in the room since they aren't tied to audio/video cables.
- Wireless Base and Pro software offers enhanced capabilities for presentations.

### Considerations:
- Relies on Remote Control to turn monitor on and off.
- The standard wireless configuration requires cabled access to building network (if the Wireless Module is configured in stand alone mode a network connection is not required).
- Devices require software installation for wireless presentations.

NON SWITCHING

Specify with
Non-Switching
Interface Module

## wireless sharing with cable backup

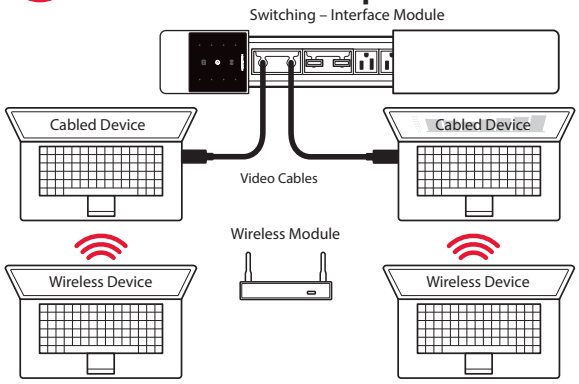


### Method for Sharing Presentations:
(How users share their presentation on the Monitor)
- **Cabled Sharing With Touch Control** – Presenters may access the monitor to share a presentation by connecting one of the audio/video cables to their device and activating the cables corresponding button on the Touch Control.
- **Wireless Sharing With Touch Control** – Using the Touch Control interface, users may switch the system to the wireless mode and use workware's Wireless Presentation Software on their device to share presentations wirelessly on the monitor.

### Method for Switching Between Presenters:
(How users switch the monitor presentation to other users)
- **Touch Control Switching** – Users may switch the monitor presentation to other cabled users by activating the corresponding button on the Touch Control.
- **Wireless Switching** – When the Wireless Mode is active, users may switch between wireless presenters using controls on workware's wireless presentation software.

### Method for Controlling Monitor Power:
- **Touch Control** – Monitor power is controlled using the power button on the Touch Control.

### Maximum Number of Connections to the Monitor :
- **Cabled Connections** – The Switching Interface Module can accommodate a maximum of four audio/video cables from each processor.
- **Wireless Connections –**
  **workware Wireless Pro**
  – Unlimited* Simultaneous presentations of users/content.
  **workware Wireless Base**
  – Upto 10* simultaneous users presentations.
  – Upto 4* simultaneous content presentations.

**The amount of simultaneous users/content is limited to the bandwidth capabilities of the network.*

### Advantages:
- Plug and play access for cabled devices - no software needed.
- Touch Pad allows monitor presentations to be switched between cabled presentation mode and wireless presentation mode.
- Touch Pad allows users to control monitor power.
- Touch Pad allows the monitor presentation to be switched over to the Video Conferencing Mode (when field supplied Video Conferencing Equipment is included).
- Wireless Base and Pro software offers enhanced capabilities for presentations.

### Considerations:
- Cabled Presenters must be within reach of cables.
- Requires access to building network (if Wireless Module is configured in stand alone mode a network connection is not required).
- Devices require software installation for wireless presentations.

SWITCHING

Specify with
Switching
Interface Module

# Product Application – Cable Sharing

## Cable Sharing (No Touch Control) – Single Monitor Application

| | |
|---|---|
| **Sharing Method:**<br>How users share their presentation on the Monitor. | **Cable Sharing**<br>• Presenters use a single audio/video cable connected directly to the monitor, this provides audio/video access to the monitor to share presentations. |
| **Switching Method:**<br>How users switch the monitor presentation to other users. | **Physical Cable Switching**<br>• Users switch between presenters by disconnecting the audio/video cable from the first user's device and connecting it to the second user's device. |
| **Maximum Number of Connections to the Monitor:** | **Single Monitor – One Cabled Connection to the Monitor**<br>• Since the audio/video cable is directly wired to the monitor this application can only provide one connection to each monitor for presentations. |
| **Monitor Power Control:** | **Monitor Remote Control**<br>• Monitor power is controlled using the monitor remote control (field supplied) or the power button on the monitor. |
| **Advantages:** | • Simple configuration.<br>• Plug and play access for cabled presenters (no software needed). |

## Separately Specified Components:

### Step 1 - Technology:

SEPARATELY SPECIFY:

**A (1) Interface Module – Non-Switching**
EWC_-_ _ _ _-NPS_BN_ _

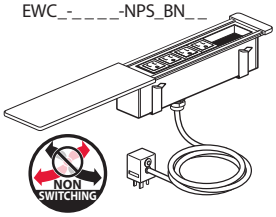


**B (1) VGA+Audio Cable**
EWCX-_ _ 01-V

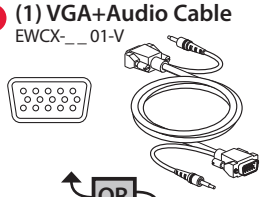

OR

**(1) HDMI Cable**
EWCX-_ _ 01-H

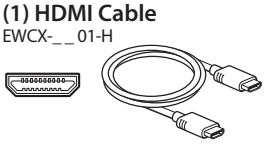

**CABLE LENGTH: CABLE LENGTHS:**
Specify cable lengths to reach from user's device to the back of the monitor.

### Step 2 - Monitor Support:

SEPARATELY SPECIFY:

**C (1) workware view Table Mount – Single Monitor**
EWVT-S_ _D-P

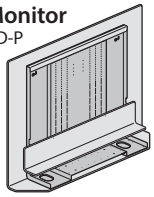

OR

**(1) workware view Enclose Wall Mount – Single Monitor**
EWVE-S_ _ _-P_

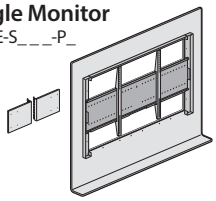

OR

**(1) workware view Structural Wall Mount – Single Monitor**
EWVD-S_ _ _-P_

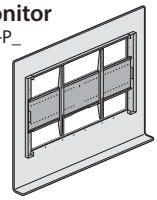

### Step 3 - Table:

SEPARATELY SPECIFY:

**D (1) Planes Conference Table – Interior Leg**
(Square, Hex or Rectangular)
TAR_-_ _ _ _

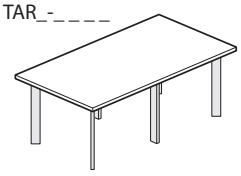

OR

**(1) Planes Conference Table – Perimeter Leg**
(Square or Rectangular)
TAR_-_ _ _ _

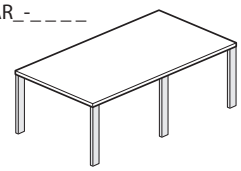

OR

**(1) Reside Table**
(Square or Rectangular)
TKR_- _ _ _ _

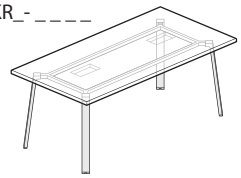

### Step 4 -Cable Management:

SEPARATELY SPECIFY:

**E (1) Cable Base**
TA01-_ _14-_

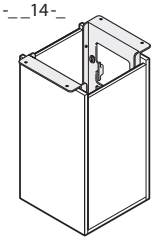

**F (1) Wire Manager– Horizontal**
(not required with wall mount applications)
EUAW

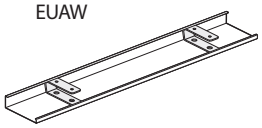

## Field Supplied Components:

**G (1) Monitor with Remote Control**
(Field Supplied)

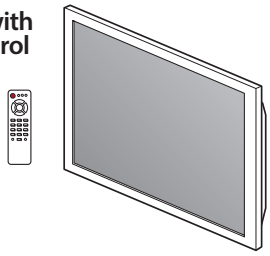

## Cable Sharing (No Touch Control) – Single Monitor Application – Cabling Diagram

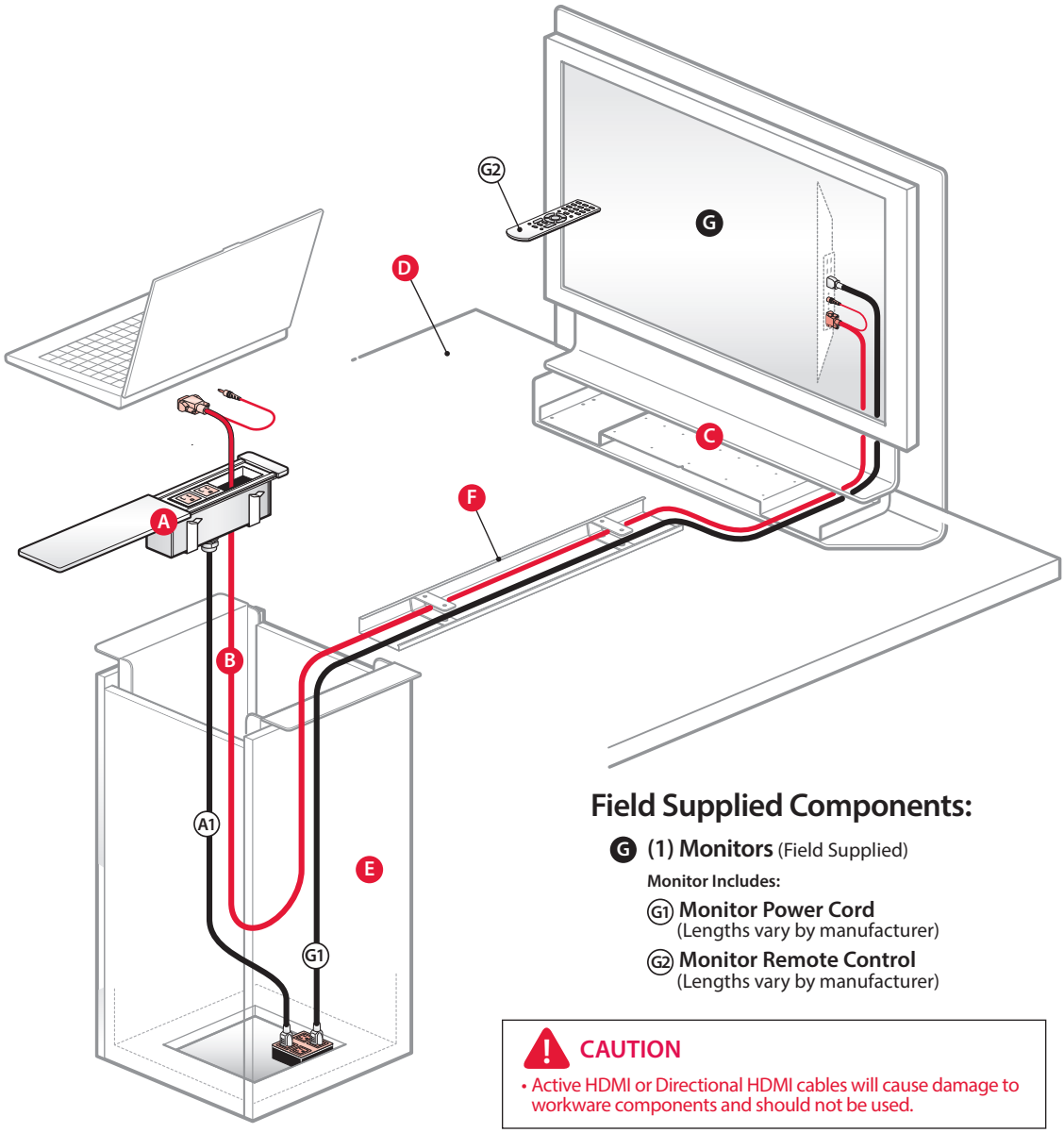


### Field Supplied Components:

**G (1) Monitors** (Field Supplied)

**Monitor Includes:**

**G1 Monitor Power Cord**
(Lengths vary by manufacturer)

**G2 Monitor Remote Control**
(Lengths vary by manufacturer)

**CAUTION**

- Active HDMI or Directional HDMI cables will cause damage to workware components and should not be used.

### Separately Specified Components:

**Step 1 - Technology:**

SEPARATELY SPECIFY:

**A (1) Interface Module – Non-Switching**
EWC_-_ _ _ _-NPS_BN_ _

**A1 Interface Module Power Cord** (Corded 12' long or Hardwired 6' long)

**B (1) VGA+Audio Cable**
EWCX-_ _ 01-V

OR

**(1) HDMI Cable**
EWCX-_ _ 01-H

**CABLE LENGTHS:** Specify cable lengths to reach from user's device to the video connection on the back of the monitors.

+

**Step 2 - Monitor Support:**

SEPARATELY SPECIFY:

**C (1) workware view Table Mount – Single Monitor**
EWVT-S_ _D-P

OR

**(1) workware view Enclose Wall Mount – Single Monitor**
EWVE-S_ _ _-P_

OR

**(1) workware view Structural Wall Mount – Single Monitor**
EWVD-S_ _ _-P_

+

**Step 3 - Table:**

SEPARATELY SPECIFY:

**D (1) Planes Conference Table – Interior Leg**
(Square, Hex or Rectangular)
TAR_-_ _ _ _

OR

**(1) Reside Table**
(Square or Rectangular)
TKR_- _ _ _ _

OR

**(1) Planes Conference Table – Perimeter Leg**
(Square or Rectangular)
TAR_-_ _ _ _

+

**Step 4 -Cable Management:**

SEPARATELY SPECIFY:

**E (1) Cable Base**
TA01-_ _14-_

**F (1) Wire Manager– Horizontal**
(not required with wall mount applications)
EUAW

# Product Application – Cable Sharing

## Cable Sharing (No Touch Control) – Table Mount – Single Monitor Application

• See the Cabling Diagram on the previous pages for a more detailed list of components.

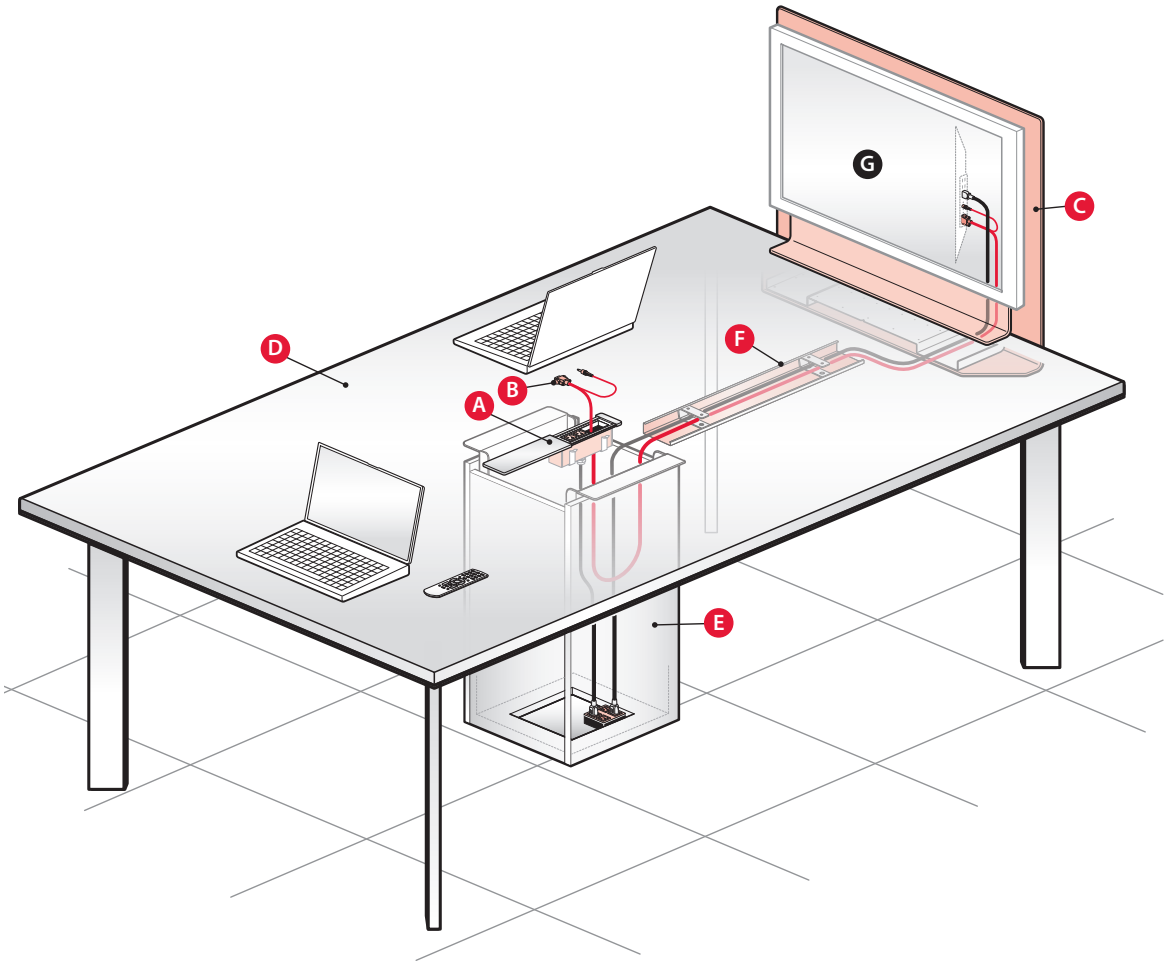


### Field Supplied Components:

G (1) **Monitors** (Field Supplied)

### Separately Specified Components:

**Step 1 - Technology:**

SEPARATELY SPECIFY:

A (1) **Interface Module – Non-Switching**
EWC_-_ _ _ _-NPS_BN_ _

B (1) **VGA+Audio Cable**
EWCX-_ _ 01-V

OR

(1) **HDMI Cable**
EWCX-_ _ 01-H

**CABLE LENGTHS**: Specify cable lengths to reach from user's device to the video connection on the back of the monitors.

+

**Step 2 - Monitor Support:**

SEPARATELY SPECIFY:

C (1) **workware view Table Mount**
EWVT-S_ _D-P

+

**Step 3 - Table:**

SEPARATELY SPECIFY:

D (1) **Planes Conference Table – Interior Leg**
(Square, Hex or Rectangular)
TAR_-_ _ _ _

OR

(1) **Reside Table**
(Square or Rectangular)
TKR_- _ _ _ _

OR

(1) **Planes Conference Table – Perimeter Leg**
(Square or Rectangular)
TAR_-_ _ _ _

+

**Step 4 -Cable Management:**

SEPARATELY SPECIFY:

E (1) **Cable Base**
TA01-_ _14-_

F (1) **Wire Manager– Horizontal**
EUAW

# Product Application – Cable Sharing

## Cable Sharing (No Touch Control)– Wall Mount – Single Monitor Application

• See the Cabling Diagram on the previous pages for a more detailed list of components.

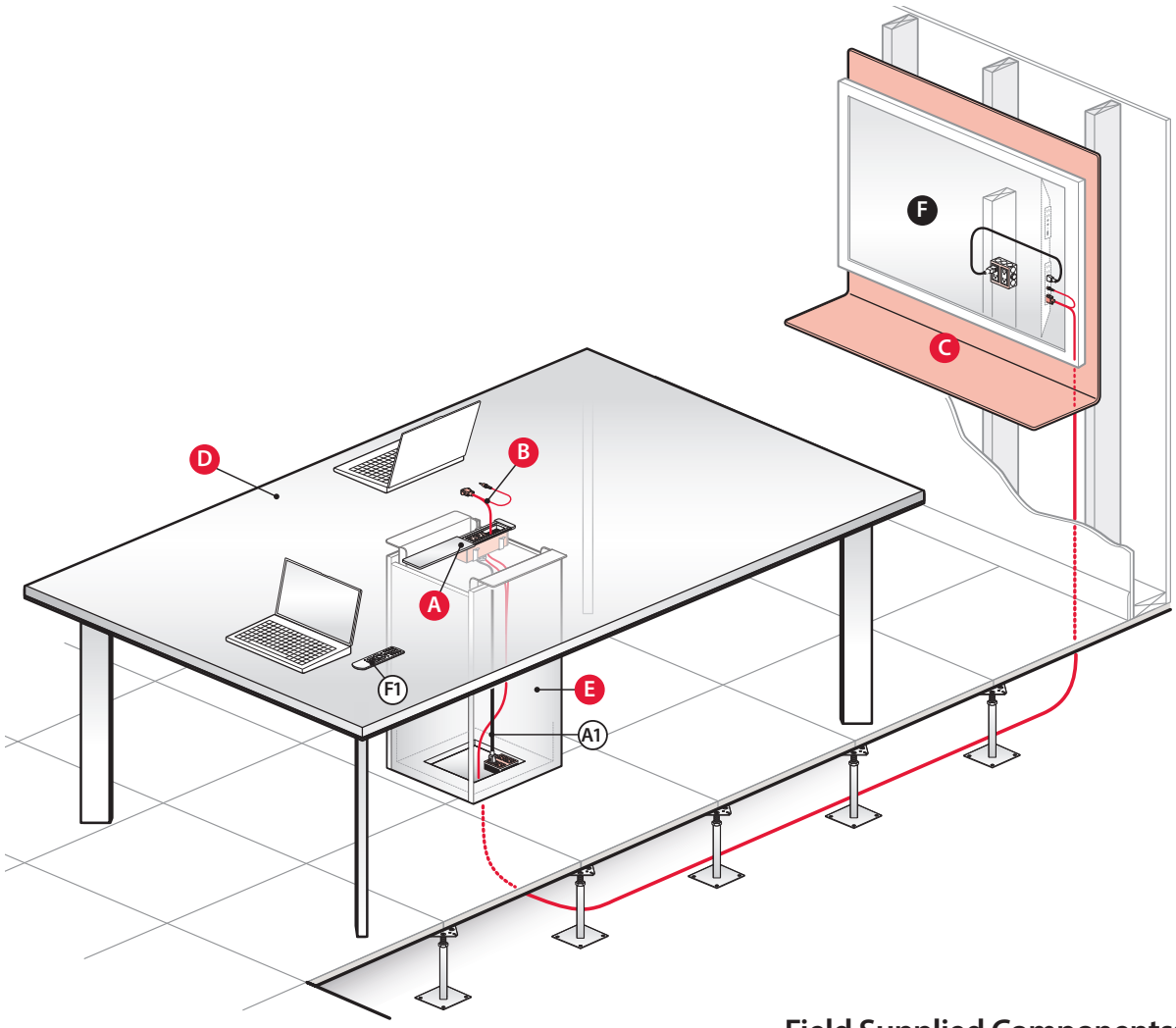


### Field Supplied Components:

F (1) **Monitors** (Field Supplied)

### Separately Specified Components:

**Step 1 - Technology:**

SEPARATELY SPECIFY:

A (1) **Interface Module – Non-Switching**
EWC_-_ _ _ _-NPS_BN_ _

B (1) **VGA+Audio Cable**
EWCX-_ _ 01-V

OR

(1) **HDMI Cable**
EWCX-_ _ 01-H

**CABLE LENGTHS**: Specify cable lengths to reach from user's device to the video connection on the back of the monitors.

+

**Step 2 - Monitor Support:**

SEPARATELY SPECIFY:

C (1) **workware view Enclose Wall Mount**
EWVE-S_ _ _-P_

OR

(1) **workware view Structural Wall Mount**
EWVD-S_ _ _-P_

+

**Step 3 - Table:**

SEPARATELY SPECIFY:

D (1) **Planes Conference Table – Interior Leg**
(Square, Hex or Rectangular)
TAR_-_ _ _ _

OR

(1) **Reside Table**
(Square or Rectangular)
TKR_- _ _ _ _

OR

(1) **Planes Conference Table – Perimeter Leg**
(Square or Rectangular)
TAR_-_ _ _ _

Note Wall mount applications may not require a table.

+

**Step 4 -Cable Management:**

SEPARATELY SPECIFY:

E (1) **Cable Base**
TA01-_ _14-_

# Product Application – Cable Sharing

## Cable Sharing (No Touch Control) – Dual Monitor Application

| | |
|---|---|
| **Sharing Method:** How users share their presentation on the Monitor. | **Cable Sharing**<br>• Presenters use a single audio/video cable connected directly to each monitor, this provides audio/video access to the monitor to share presentations. |
| **Switching Method:** How users switch the monitor presentation to other users. | **Physical Cable Switching**<br>• Users switch between presenters by disconnecting the audio/video cable from the first user's device and connecting it to the second user's device. |
| **Maximum Number of Connections to the Monitor:** | **Dual Monitor – Two Cabled Monitor Connections (one connection for each monitor)**<br>• Since the audio/video cables are directly wired to each monitor this application can only provide one connection to each monitor for presentations. |
| **Monitor Power Control:** | **Monitor Remote Control**<br>• Monitor power is controlled using the monitor remote control (field supplied) or the power button on the monitor. |
| **Advantages:** | • Simple configuration.<br>• Plug and play access for cabled presenters (no software needed). |

## Separately Specified Components:

### Step 1 - Technology:

SEPARATELY SPECIFY:

**A (1) Interface Module – Non-Switching**
EWC_-_ _ _ _-NPS_BN_ _

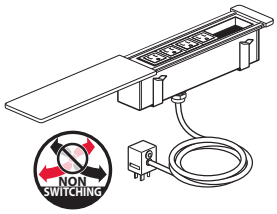


**B (2) User Audio/Video Cables**
(Choice of Two)

**VGA+Audio Cable**
EWCX-_ _ 01-V

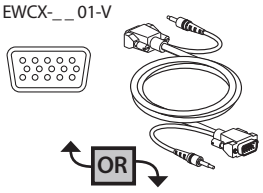


**HDMI Cable**
EWCX-_ _ 01-H

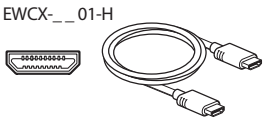

**CABLE LENGTHS**: Specify cable lengths to reach from user's device to the video connection on the back of the monitors.

### Step 2 - Monitor Support:

SEPARATELY SPECIFY:

**C (1) workware view Table Mount – Dual Monitor**
EWVT-DC_D-P

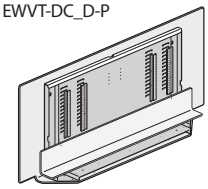

OR

**(1) workware view – Enclose Wall Mount – Dual Monitors**
EWVE-D_SS-PP

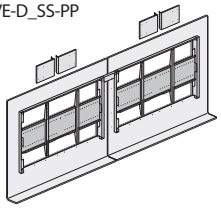

OR

**(1) workware view – Structural Wall Mount – Dual Monitors**
EWVD-D_SS-PP

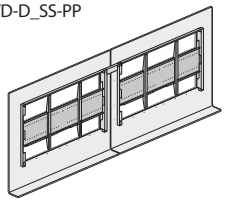

### Step 3 - Table:

SEPARATELY SPECIFY:

**D (1) Planes Conference Table – Interior Leg**
(Square, Hex or Rectangular)
TAR_-_ _ _ _

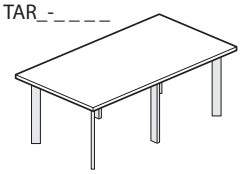

OR

**(1) Planes Conference Table – Perimeter Leg**
(Square or Rectangular)
TAR_-_ _ _ _

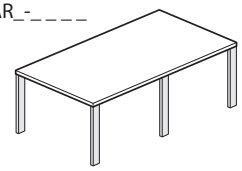

OR

**(1) Reside Table**
(Square or Rectangular)
TKR_- _ _ _ _

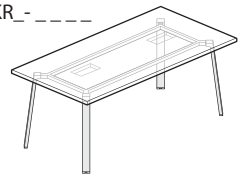

### Step 4 -Cable Management:

SEPARATELY SPECIFY:

**E (1) Cable Base**
TA01-_ _14-_

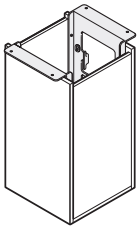

**F (1) Wire Manager– Horizontal**
(not required with wall mount applications)
EUAW

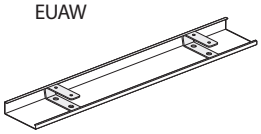

## Field Supplied Components:

**G (2) Monitors with Remote Control**
(Field Supplied)

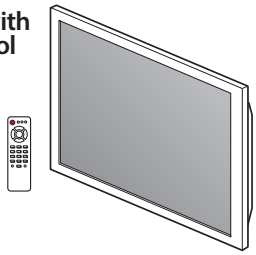

# Product Application – Cable Sharing

## Cable Sharing (No Touch Control) – Dual Monitor Application – Cabling Diagram

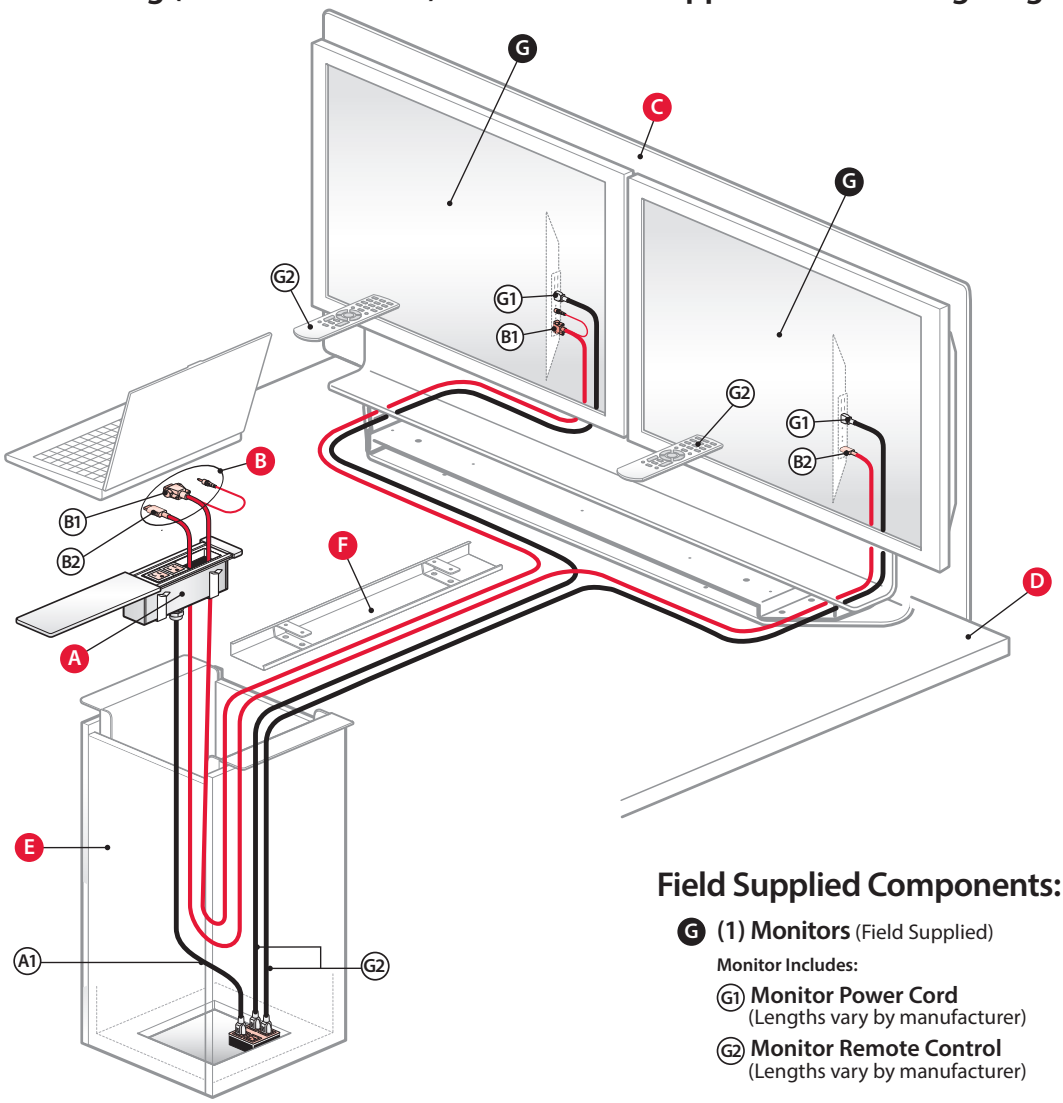


### Field Supplied Components:

**G (1) Monitors** (Field Supplied)

**Monitor Includes:**

**G1 Monitor Power Cord**
(Lengths vary by manufacturer)

**G2 Monitor Remote Control**
(Lengths vary by manufacturer)

### Separately Specified Components:

#### Step 1 - Technology:

**SEPARATELY SPECIFY:**

**A (1) Interface Module – Non-Switching**
EWC_-_ _ _ _-NPS_BN_

**A1 Interface Module Power Cord** (Corded 12' long or Hardwired 6' long)

**B (2) User Audio/Video Cables**
(Choice of Two A/V Cables)

**B1 VGA+Audio Cable**
EWCX-_ _ 01-V

OR

**B2 HDMI Cable**
EWCX-_ _ 01-H

**CABLE LENGTHS:** Specify cable lengths to reach from user's device to the video connection on the back of the monitors.

+

#### Step 2 - Monitor Support:

**SEPARATELY SPECIFY:**

**C (1) workware view Table Mount – Dual Monitor**
EWVT-DC_D-P

OR

**(1) workware view – Enclose Wall Mount – Dual Monitors**
EWVE-D_SS-PP

OR

**(1) workware view – Structural Wall Mount – Dual Monitors**
EWVD-D_SS-PP

+

#### Step 3 - Table:

**SEPARATELY SPECIFY:**

**D (1) Planes Conference Table – Interior Leg**
(Square, Hex or Rectangular)
TAR_-_ _ _ _

OR

**(1) Reside Table**
(Square or Rectangular)
TKR_- _ _ _ _

OR

**(1) Planes Conference Table – Perimeter Leg**
(Square or Rectangular)
TAR_-_ _ _ _

+

#### Step 4 -Cable Management:

**SEPARATELY SPECIFY:**

**E (1) Cable Base**
TA01-_ _14-_

**F (1) Wire Manager– Horizontal**
(not required with wall mount applications)
EUAW

**CAUTION**

- Active HDMI or Directional HDMI cables will cause damage to workware components and should not be used.

# Product Application – Cable Sharing

## Cable Sharing (No Touch Control) – Table Mount – Dual Monitor Application

• See the Cabling Diagram on the previous pages for a more detailed list of components.

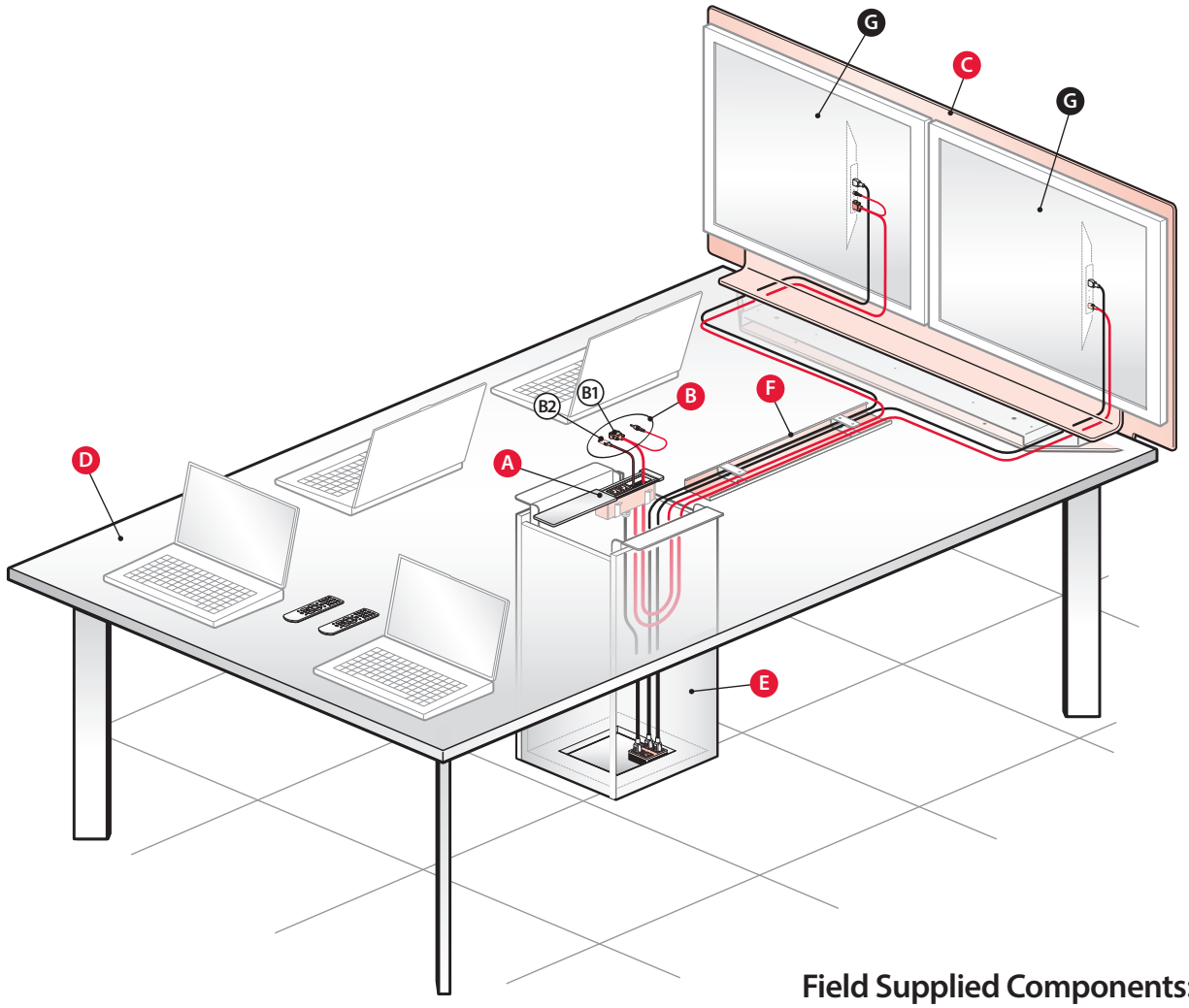


### Field Supplied Components:

G (2) Monitors (Field Supplied)

### Separately Specified Components:

**Step 1 - Technology:**

SEPARATELY SPECIFY:

A (1) Interface Module – Non-Switching
EWC_-_ _ _ _-NPS_BN_ _

B (2) User Audio/Video Cables
(Choice of Two A/V Cables)

B1 VGA+Audio Cable
EWCX-_ _ 01-V

OR

B2 HDMI Cable
EWCX-_ _ 01-H

**CABLE LENGTHS:** Specify cable lengths to reach from user's device to the video connection on the back of the monitors.

+

**Step 2 - Monitor Support:**

SEPARATELY SPECIFY:

C (1) workware view Table Mount – Dual Monitor
EWVT-DC_D-P

+

**Step 3 - Table:**

SEPARATELY SPECIFY:

D (1) Planes Conference Table – Interior Leg
(Square, Hex or Rectangular)
TAR_-_ _ _ _

OR

(1) Reside Table
(Square or Rectangular)
TKR_- _ _ _ _

OR

(1) Planes Conference Table – Perimeter Leg
(Square or Rectangular)
TAR_-_ _ _ _

+

**Step 4 -Cable Management:**

SEPARATELY SPECIFY:

E (1) Cable Base
TA01-_ _14-_

F (1) Wire Manager– Horizontal
EUAW

## Cable Sharing (No Touch Control) – Wall Mount – Dual Monitor Application

• See the Cabling Diagram on the previous pages for a more detailed list of components.

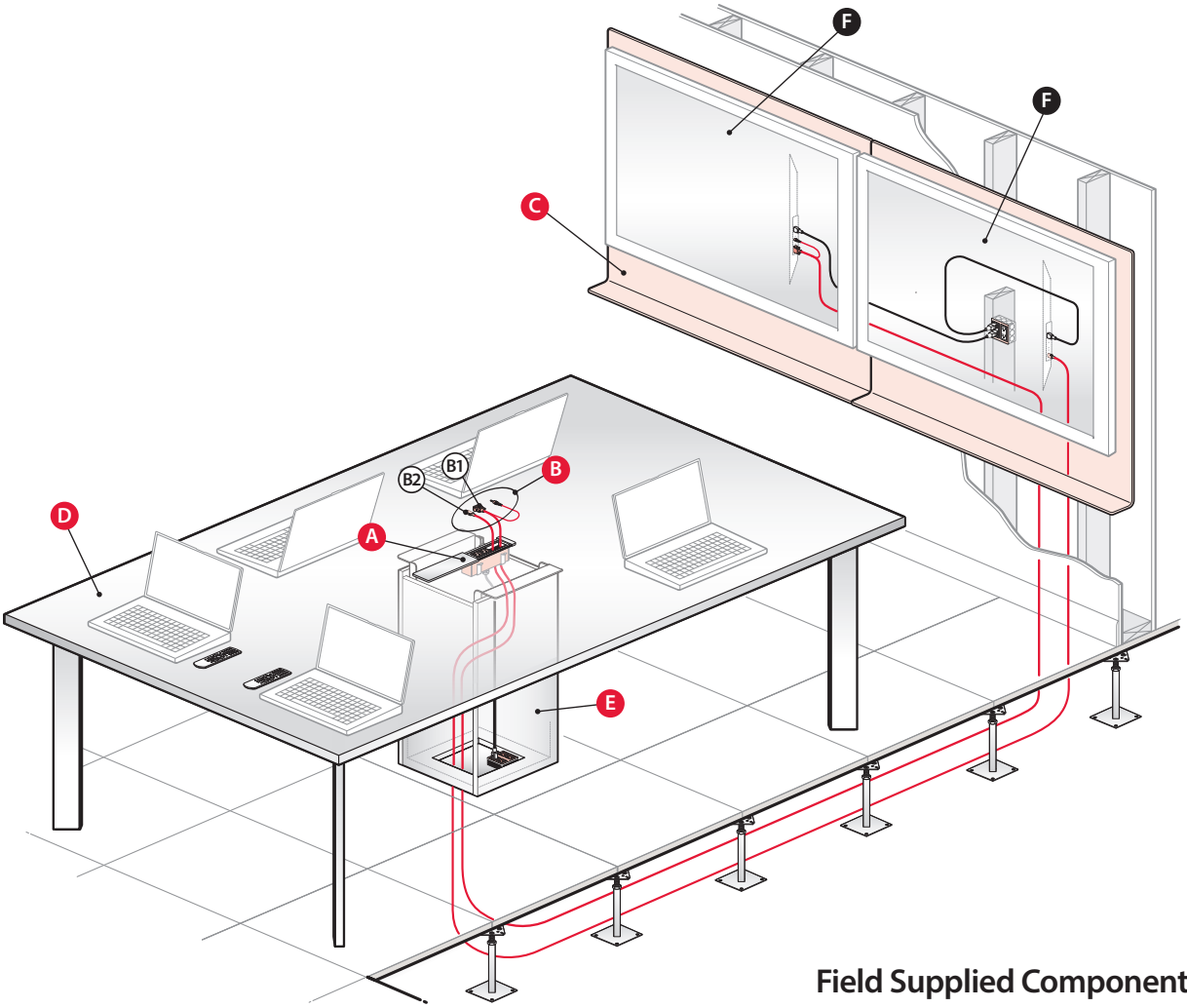


### Field Supplied Components:

F (2) Monitors (Field Supplied)

### Separately Specified Components:

**Step 1 - Technology:**

SEPARATELY SPECIFY:

A (1) Interface Module – Non-Switching
EWC_-_ _ _ _-NPS_BN_ _

B (2) User Audio/Video Cables
(Choice of Two A/V Cables)

B1 VGA+Audio Cable
EWCX-_ _ 01-V

OR

B2 HDMI Cable
EWCX-_ _ 01-H

**CABLE LENGTHS**: Specify cable lengths to reach from user's device to the video connection on the back of the monitors.

+

**Step 2 - Monitor Support:**

SEPARATELY SPECIFY:

C (1) workware view – Enclose Wall Mount – Dual Monitors
EWVE-D_SS-PP

OR

(1) workware view Structural Wall Mount
EWVD-S_ _ _-P_

+

**Step 3 - Table:**

SEPARATELY SPECIFY:

D (1) Planes Conference Table – Interior Leg
(Square, Hex or Rectangular)
TAR_-_ _ _ _

OR

(1) Reside Table
(Square or Rectangular)
TKR_- _ _ _ _

OR

(1) Planes Conference Table – Perimeter Leg
(Square or Rectangular)
TAR_-_ _ _ _

Note Wall mount applications may not require a table.

+

**Step 4 -Cable Management:**

SEPARATELY SPECIFY:

E (1) Cable Base
TA01-_ _14-_

# Product Application – Cable Sharing with Touch Control

## Cable Sharing with Touch Control – Single Monitor Application

| | |
|---|---|
| **Sharing Method:** How users share their presentation on the Monitor. | **Cabled Sharing With Touch Control**<br>• Presenters may access the monitor to share a presentation by connecting audio/video cables to their device and activating the cables corresponding button on the Touch Control. |
| **Switching Method:** How users switch the monitor presentation to other users. | **Touch Control Switching**<br>• Users may switch monitor presentation to other users by activating the buttons on the Touch Control. |
| **Maximum Number of Connections to the Monitor:** | **Cabled Connections**<br>• The Switching Interface Module can accommodate a maximum of (4) audio/video cables from each processor. |
| **Monitor Power Control:** | **Touch Control**<br>• Monitor power is controlled using the power button on the Touch Control. |
| **Advantages:** | • Plug and play access for cabled presenters (no software needed).<br>• Touch Pad allows easy switching between cabled presenters and presentation modes.<br>• Touch Pad/Processor supports Video Conferencing Mode. |

## Separately Specified Components:

### Step 1 - Technology:

SEPARATELY SPECIFY:

**A (1) Interface Module – Switching**
EWC_-_ _ _ _-CPS_BN_ _

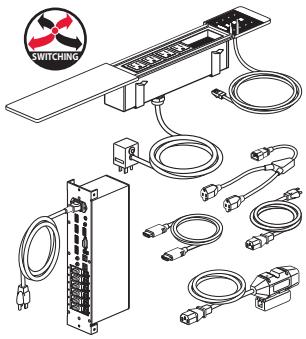


User Audio/Video Cable Options:

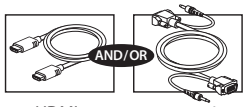


HDMI VGA+Audio

**B (1) HDMI Cable**
EWCX-_ _ 01-H

**CABLE LENGTHS:** Specify cable lengths to reach from processor to the video connection on the back of the monitor.

### Step 2 - Monitor Support:

SEPARATELY SPECIFY:

**C (1) workware view Table Mount**
EWVT-S_ _D-P

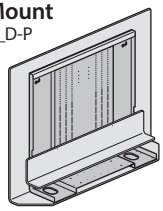

OR

**(1) workware view Enclose Wall Mount**
EWVE-S_ _ _-P_

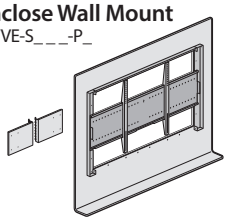

OR

**(1) workware view Structural Wall Mount**
EWVD-S_ _ _-P_

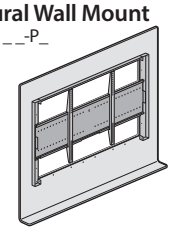

### Step 3 - Table:

SEPARATELY SPECIFY:

**D (1) Planes Conference Table – Interior Leg**
(Square, Hex or Rectangular)
TAR_-_ _ _ _

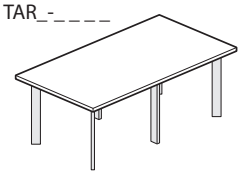

OR

**(1) Planes Conference Table – Perimeter Leg**
(Square or Rectangular)
TAR_-_ _ _ _

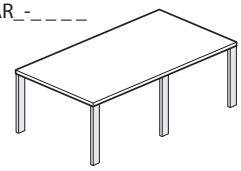

OR

**(1) Reside Table**
(Square or Rectangular)
TKR_- _ _ _ _

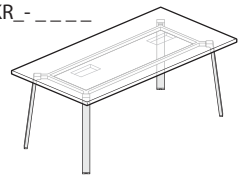

### Step 4 -Cable Management:

SEPARATELY SPECIFY:

**E (1) Cable Base**
TA01-_ _14-_

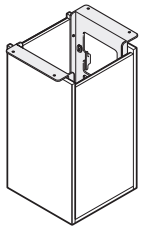

**F (1) Wire Manager– Horizontal**
(not required with wall mount applications)
EUAW

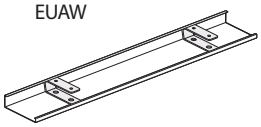

## Field Supplied Components:

**G (1) Monitor**
(Field Supplied)

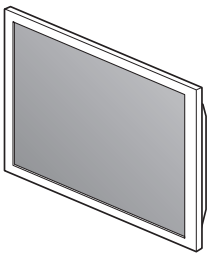

# Product Application – Cable Sharing with Touch Control

## Cable Sharing with Touch Control – Single Monitor Application – Cabling Diagram

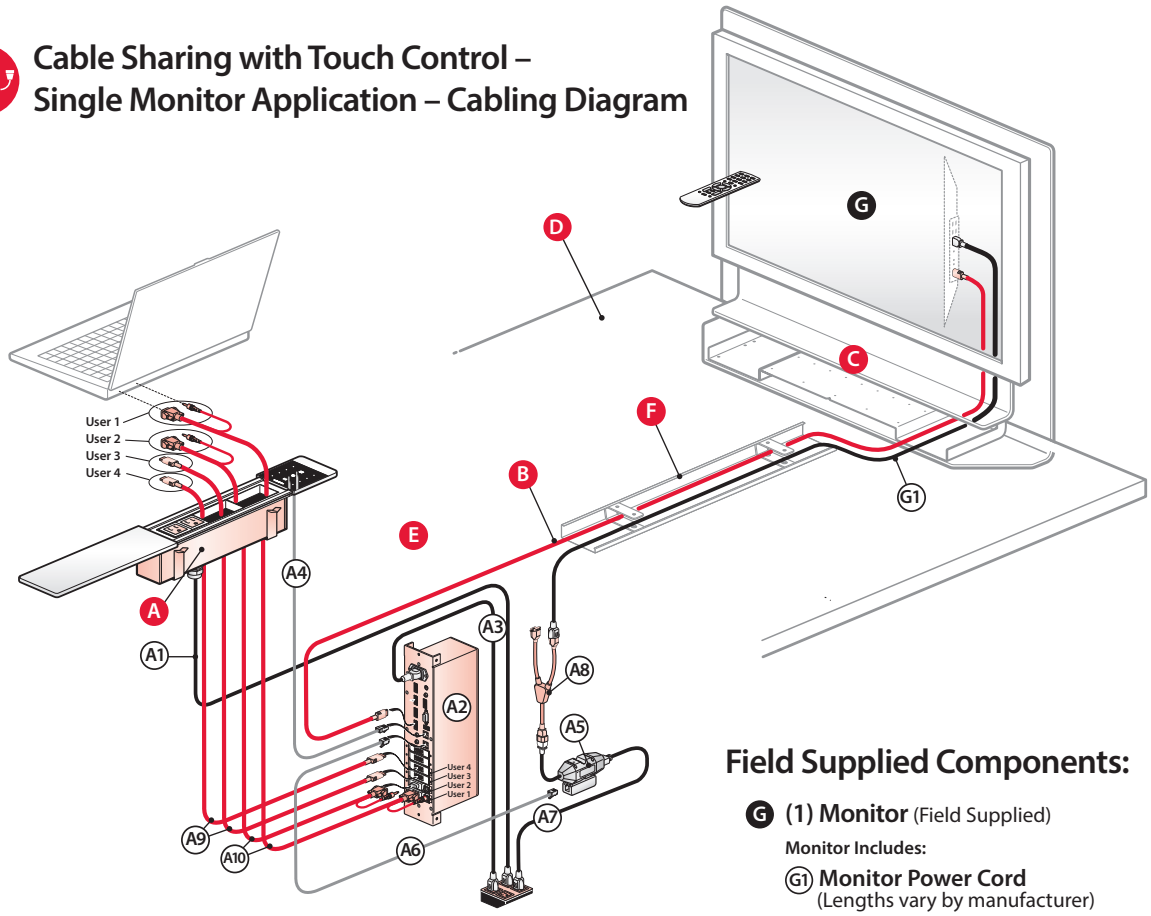


## Field Supplied Components:

**G (1) Monitor** (Field Supplied)

**Monitor Includes:**

**G1 Monitor Power Cord**
(Lengths vary by manufacturer)

## Separately Specified Components:

### Step 1 - Technology:

**SEPARATELY SPECIFY:**

**A (1) Interface Module – Switching**
EWC_-_ _ _ _-CPS_BN_ _

**Switching Interface Module Includes:**

- **A1 (1) Interface Module Power Cord** (Corded 12' long or Hardwired 6' long)
- **A2 (1) Processor**
- **A3 (1) Processor Power Cord** (6' long)
- **A4 (1) Touch Control Data Cable** (6' long)
- **A5 (1) Power Relay Cord** (5' long)
- **A6 (1) Power Relay Data Cable** (6' long)
- **A7 (1) Power Relay Adapter Cord A** (6' long)
- **A8 (1) Power Relay Adapter Cord B** (1' long)

**User A/V Cable Options**
May be specified with two or four of the following audio/video cables:

- **A9 HDMI Cable** (10' long)
- **A10 VGA+Audio Cable** (12' long)

**B (1) HDMI Cable**
EWCX-_ _ 01-H

**CABLE LENGTHS:** Specify cable lengths to reach from processor to the monitor.

### Step 2 - Monitor Support:

**SEPARATELY SPECIFY:**

**C (1) workware view Table Mount**
EWVT-S_ _D-P

OR

**(1) workware view Enclose Wall Mount**
EWVE-S_ _ _-P_

OR

**(1) workware view Structural Wall Mount**
EWVD-S_ _ _-P_

### Step 3 - Table:

**SEPARATELY SPECIFY:**

**D (1) Planes Conference Table – Interior Leg**
(Square, Hex or Rectangular)
TAR_-_ _ _ _

OR

**(1) Reside Table**
(Square or Rectangular)
TKR_-_ _ _ _

OR

**(1) Planes Conference Table – Perimeter Leg**
(Square or Rectangular)
TAR_-_ _ _ _

### Step 4 -Cable Management:

**SEPARATELY SPECIFY:**

**E (1)Cable Base**
TA01-_ _14-_

**F (1) Wire Manager– Horizontal**
(not required with wall mount applications)
EUAW

**CAUTION**

- Active HDMI or Directional HDMI cables will cause damage to workware components and should not be used.
- Do not use Power Relay with projectors, to allow proper cool down cycle for projector lamp.

**Note** Wall mount applications locate the Power Relay Cord near the monitor and away from the Processor. These applications require replacing the 6' Power Relay Data Cable (included with the Switching Interface Module) with a longer separately specified Power Relay Data Cable (EWCX-_ _01-PR). The cable must be specified with sufficient length to reach from the Processor to the location of the Power Relay Cord (near the monitor).

# Product Application – Cable Sharing with Touch Control

## Cable Sharing with Touch Control – Single Monitor – Table Mount Application

• See the Cabling Diagram on the previous pages for a more detailed list of components.

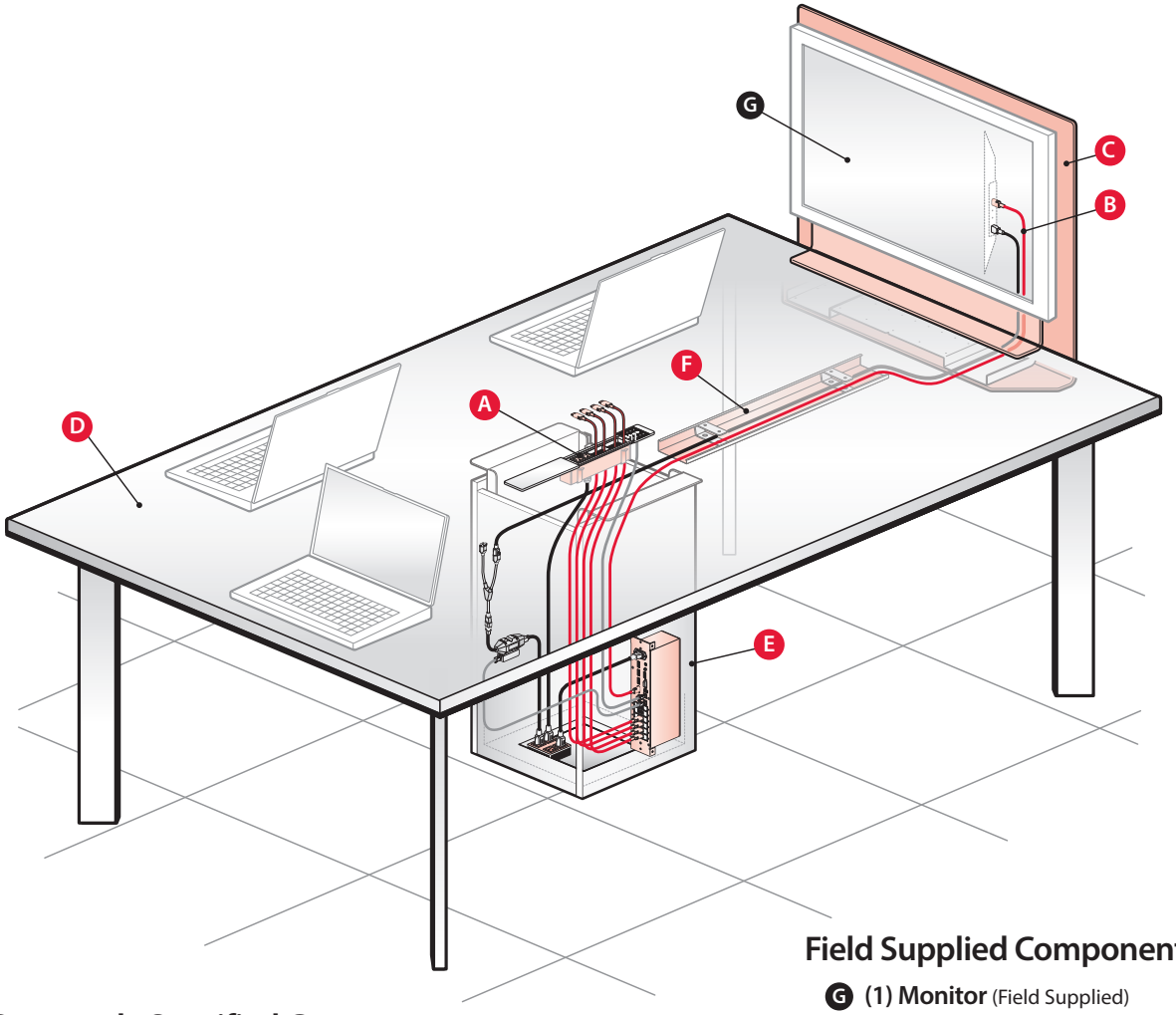


### Field Supplied Components:

G (1) **Monitor** (Field Supplied)

### Separately Specified Components:

**Step 1 - Technology:**

SEPARATELY SPECIFY:

A (1) **Interface Module – Switching**
EWC_-_ _ _ _-CPS_BN_ _

B (1) **HDMI Cable**
EWCX-_ _ 01-H

**CABLE LENGTHS**: Specify cable lengths to reach from reach from processor to the monitor.

+

**Step 2 - Monitor Support:**

SEPARATELY SPECIFY:

C (1) **workware view Table Mount – Single Monitor**
EWVT-S_ _D-P

+

**Step 3 - Table:**

SEPARATELY SPECIFY:

D (1) **Planes Conference Table – Interior Leg**
(Square, Hex or Rectangular)
TAR_-_ _ _ _

OR

(1) **Reside Table**
(Square or Rectangular)
TKR_- _ _ _ _

OR

(1) **Planes Conference Table – Perimeter Leg**
(Square or Rectangular)
TAR_-_ _ _ _

+

**Step 4 -Cable Management:**

SEPARATELY SPECIFY:

E (1) **Cable Base**
TA01-_ _14-_

F (1) **Wire Manager– Horizontal**
EUAW

Note **Table mount applications specified with longer tables may require the Power Relay Cord be located farther than 6' away from the Processor. These applications require replacing the standard 6' Power Relay Data Cable (included with the Switching Interface Module) with a longer separately specified Power Relay Data Cable (EWCX-_ _01-PR). The cable must be specified with sufficient length to reach from the Processor to the location of the Power Relay Cord (usually near the monitor).**

## Cable Sharing with Touch Control – Single Monitor – Wall Mount Application

• See the Cabling Diagram on the previous pages for a more detailed list of components.

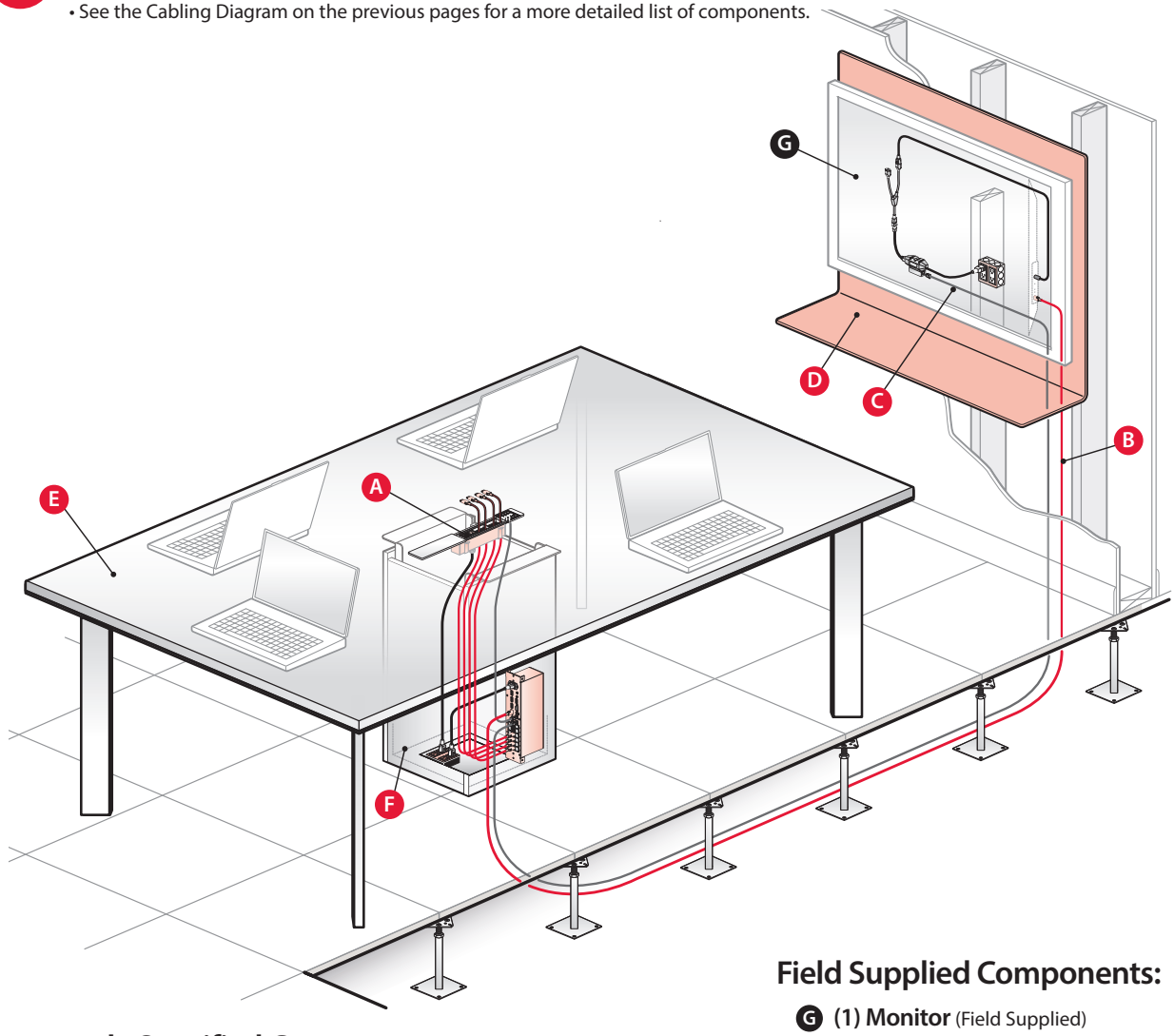


### Field Supplied Components:

G (1) Monitor (Field Supplied)

### Separately Specified Components:

**Step 1 - Technology:**

SEPARATELY SPECIFY:

A (1) Interface Module – Switching
EWC_-_ _ _ _-CPS_BN_ _

B (1) HDMI Cable
EWCX-_ _ 01-H

**CABLE LENGTH:** HDMI Cable lengths should be specified to reach from processor to the monitor.

C (1) Power Relay Data Cable
EWCX-_ _01-PR

**CABLE LENGTHS**: Specify cable lengths to reach from processor to the Power Relay Cord (near monitor).

+

**Step 2 - Monitor Support:**

SEPARATELY SPECIFY:

D (1) workware view Enclose Wall Mount
EWVE-S_ _ _-P_

OR

(1) workware view Structural Wall Mount
EWVD-S_ _ _-P_

+

**Step 3 - Table:**

SEPARATELY SPECIFY:

E (1) Planes Conference Table – Interior Leg
(Square, Hex or Rectangular)
TAR_-_ _ _ _

OR

(1) Reside Table
(Square or Rectangular)
TKR_- _ _ _ _

OR

(1) Planes Conference Table – Perimeter Leg
(Square or Rectangular)
TAR_-_ _ _ _

Note Wall mount applications may not require a table.

+

**Step 4 -Cable Management:**

SEPARATELY SPECIFY:

F (1) Cable Base
TA01-_ _14-_

Note **Wall mount applications locate the Power Relay Cord near the monitor and away from the Processor. These applications require replacing the 6' Power Relay Data Cable (included with the Switching Interface Module) with a longer separately specified Power Relay Data Cable (EWCX-_ _01-PR). The cable must be specified with sufficient length to reach from the Processor to the location of the Power Relay Cord (near the monitor).**

# Product Application – Cable Sharing with Touch Control

## Cable Sharing with Touch Control – Dual Monitor Application

| | |
|---|---|
| **Sharing Method:** How users share their presentation on the Monitor. | **Cabled Sharing With Touch Control**<br>• Presenters may access either monitor to share a presentation by connecting audio/video cables to their device and activating the cables corresponding button on the Touch Control. |
| **Switching Method:** How users switch the monitor presentation to other users. | **Touch Control Switching**<br>• Users may switch the monitor presentation to other users by activating the corresponding button on the Touch Control. |
| **Maximum Number of Connections to the Monitor:** | **Cabled Connections**<br>• The Switching Interface Module can accommodate a maximum of (4) audio/video cables from each processor. |
| **Monitor Power Control:** | **Touch Control**<br>• Monitor power is controlled using the power button on the Touch Control. |
| **Advantages:** | • Plug and play access for cabled presenters (no software needed).<br>• Touch Pad allows easy switching between cabled presenters and presentation modes.<br>• Touch Pad/Processor supports Video Conferencing Mode. |

## Separately Specified Components:

### Step 1 - Technology:

SEPARATELY SPECIFY:

**A (1) Interface Module – Switching**
EWC_-_ _ _ _-CPS_BN_ _

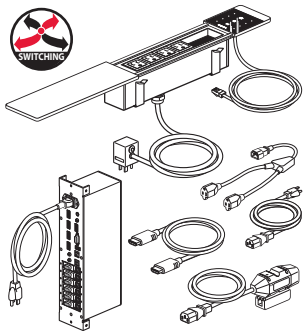


User Audio/Video Cable Options:

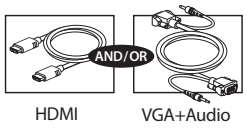


**B (2) HDMI Cable**
EWCX-_ _ 01-H

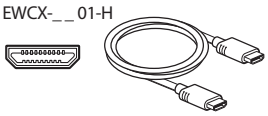

**CABLE LENGTHS:** Specify cable lengths to reach from processor to the video connection on the back of the monitor.

### Step 2 - Monitor Support:

SEPARATELY SPECIFY:

**C (1) workware view Table Mount – Dual Monitor**
EWVT-DC_D-P

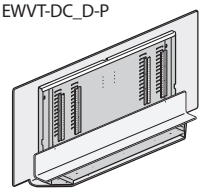

OR

**(1) workware view – Enclose Wall Mount – Dual Monitors**
EWVE-D_SS-PP

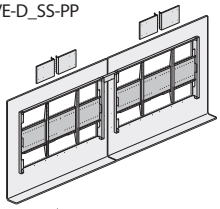

OR

**(1) workware view – Structural Wall Mount – Dual Monitors**
EWVD-D_SS-PP

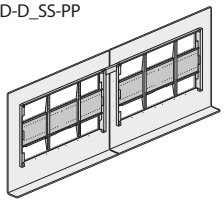

### Step 3 - Table:

SEPARATELY SPECIFY:

**D (1) Planes Conference Table – Interior Leg**
(Square, Hex or Rectangular)
TAR_-_ _ _ _

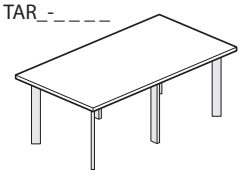

OR

**(1) Planes Conference Table – Perimeter Leg**
(Square or Rectangular)
TAR_-_ _ _ _

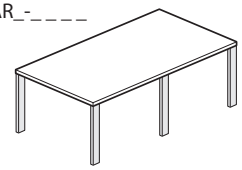

OR

**(1) Reside Table**
(Square or Rectangular)
TKR_- _ _ _ _

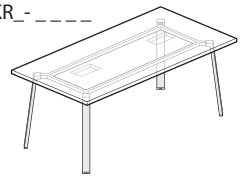

### Step 4 -Cable Management:

SEPARATELY SPECIFY:

**E (1) Cable Base**
TA01-_ _14-_

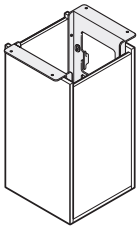

**F (1) Wire Manager– Horizontal**
(not required with wall mount applications)
EUAW

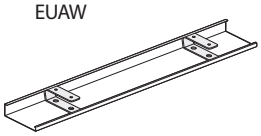

## Field Supplied Components:

**G (2) Monitor**
(Field Supplied)

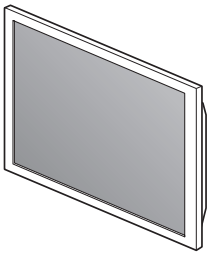

# Product Application – Cable Sharing with Touch Control

## Cable Sharing with Touch Control – Dual Monitor Application – Cabling Diagram

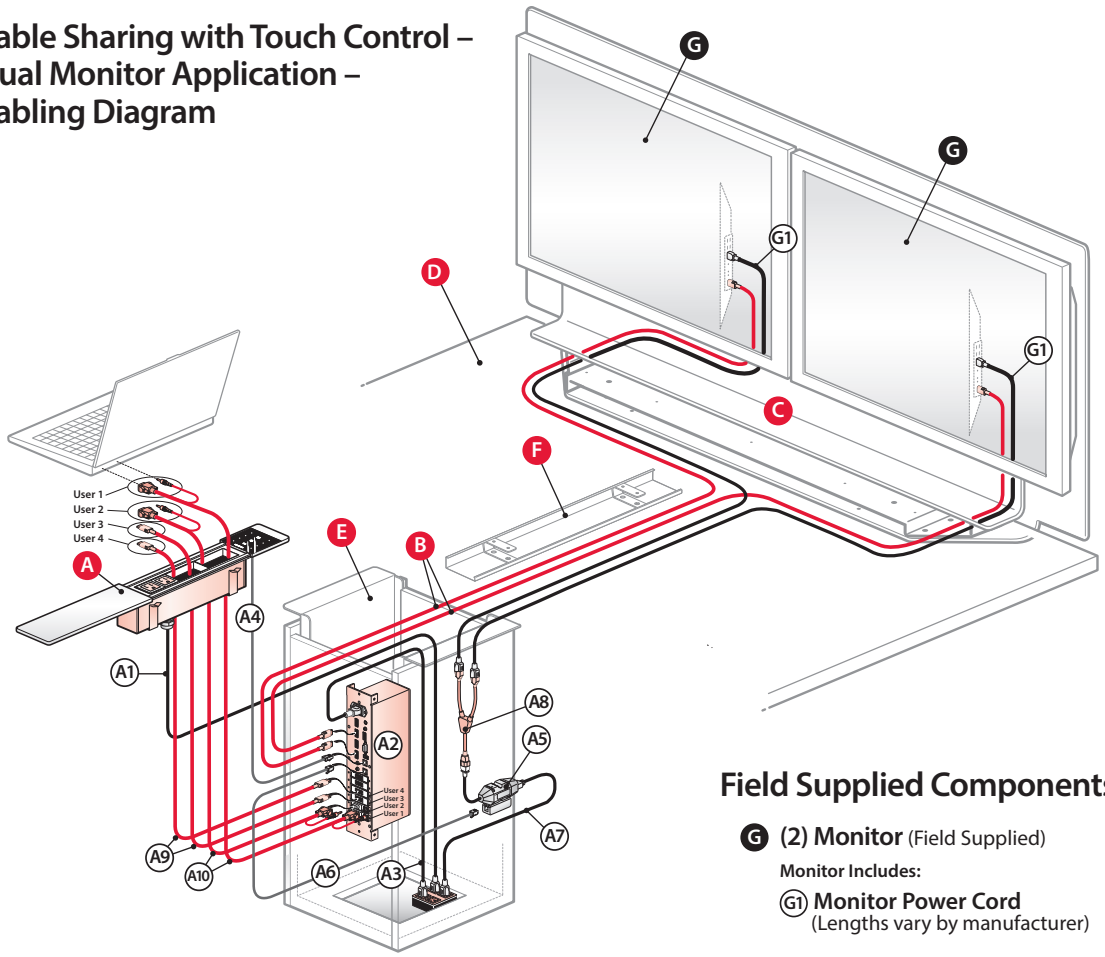


## Field Supplied Components:

**G (2) Monitor** (Field Supplied)

**Monitor Includes:**

**G1 Monitor Power Cord**
(Lengths vary by manufacturer)

## Separately Specified Components:

### Step 1 - Technology:

**SEPARATELY SPECIFY:**

**A (1) Interface Module – Switching**
EWC_-_ _ _ _-CPS_BN_ _

**Switching Interface Module Includes:**

- **A1 (1) Interface Module Power Cord** (Corded 12' long or Hardwired 6' long)
- **A2 (1) Processor**
- **A3 (1) Processor Power Cord** (6' long)
- **A4 (1) Touch Control Data Cable** (6' long)
- **A5 (1) Power Relay Cord** (5' long)
- **A6 (1) Power Relay Data Cable** (6' long)
- **A7 (1) Power Relay Adapter Cord A** (6' long)
- **A8 (1) Power Relay Adapter Cord B** (1' long)

**User A/V Cable Options**
May be specified with two or four of the following audio/video cables:

- **A9 (2) HDMI Cable** (10' long)
- **A10 (2) VGA+Audio Cable** (12' long)

**B (2) HDMI Cable**
EWCX-_ _ 01-H

**CABLE LENGTHS:** Specify cable lengths to reach from processor to the monitor.

### Step 2 - Monitor Support:

**SEPARATELY SPECIFY:**

**C (1) workware view Table Mount – Dual Monitor**
EWVT-DC_D-P

OR

**(1) workware view – Enclose Wall Mount – Dual Monitors**
EWVE-D_SS-PP

OR

**(1) workware view – Structural Wall Mount – Dual Monitors**
EWVD-D_SS-PP

### Step 3 - Table:

**SEPARATELY SPECIFY:**

**D (1) Planes Conference Table – Interior Leg**
(Square, Hex or Rectangular)
TAR_-_ _ _ _

OR

**(1) Reside Table**
(Square or Rectangular)
TKR_- _ _ _ _

OR

**(1) Planes Conference Table – Perimeter Leg**
(Square or Rectangular)
TAR_-_ _ _ _

### Step 4 -Cable Management:

**SEPARATELY SPECIFY:**

**E (1) Cable Base**
TA01-_ _14-_

**F (1) Wire Manager– Horizontal**
(not required with wall mount applications)
EUAW

**CAUTION**

- Active HDMI or Directional HDMI cables will cause damage to workware components and should not be used.
- Do not use Power Relay with projectors, to allow proper cool down cycle for projector lamp.

**Note** **Wall mount applications locate the Power Relay Cord near the monitor and away from the Processor. These applications require replacing the 6' Power Relay Data Cable (included with the Switching Interface Module) with a longer separately specified Power Relay Data Cable (EWCX-_ _01-PR). The cable must be specified with sufficient length to reach from the Processor to the location of the Power Relay Cord (near the monitor).**

# Product Application – Cable Sharing with Touch Control

## Cable Sharing with Touch Control – Dual Monitor – Table Mount Application

• See the Cabling Diagram on the previous pages for a more detailed list of components.

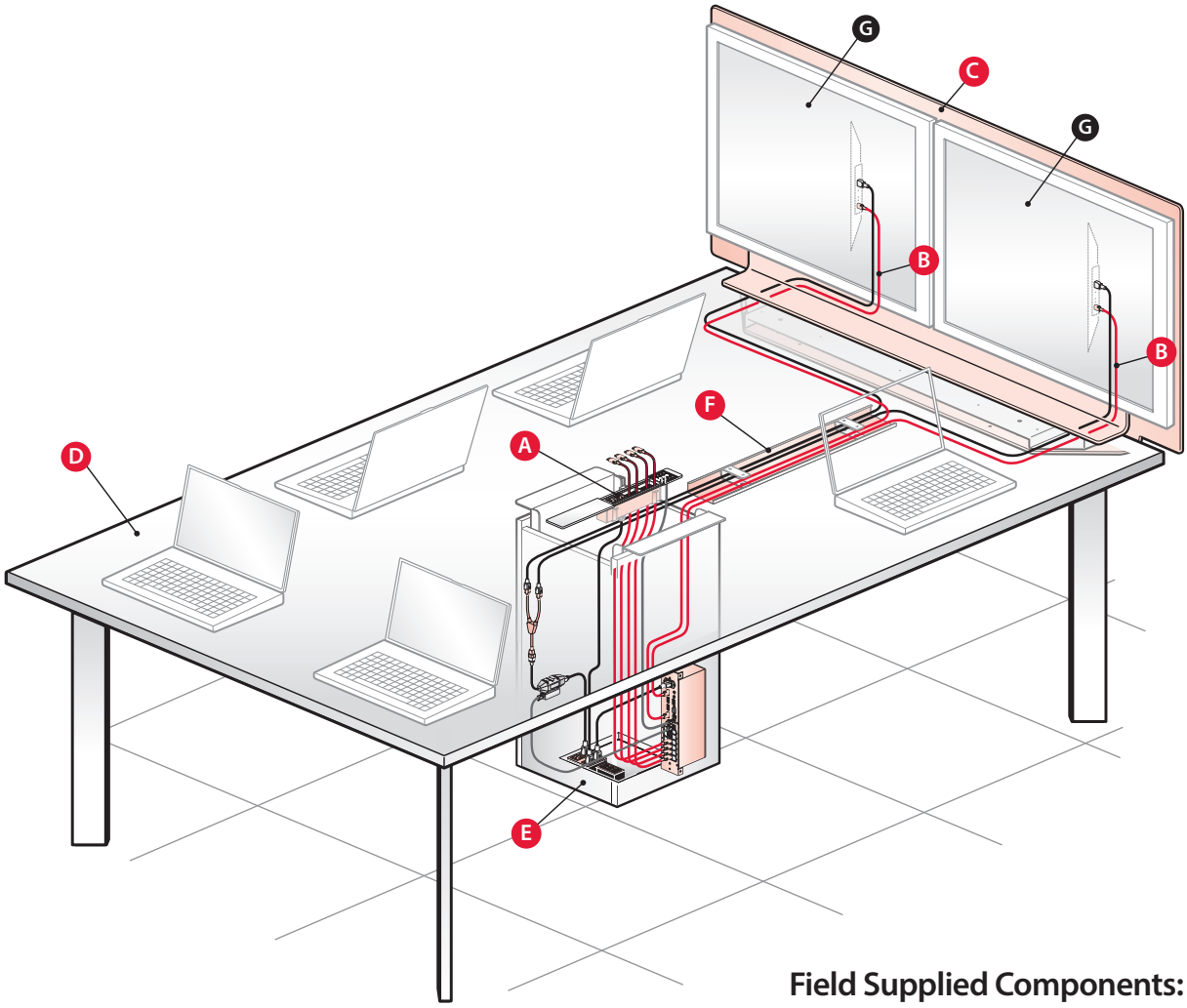


### Field Supplied Components:

G (1) Monitor (Field Supplied)

### Separately Specified Components:

**Step 1 - Technology:**

SEPARATELY SPECIFY:

A (1) Interface Module – Switching
EWC_-_ _ _ _-CPS_BN_ _

B (2) HDMI Cable
EWCX-_ _ 01-H

**CABLE LENGTHS**: Specify cable lengths to reach from processor to the monitor.

+

**Step 2 - Monitor Support:**

SEPARATELY SPECIFY:

C (1) workware view Table Mount – Dual Monitor
EWVT-DC_D-P

+

**Step 3 - Table:**

SEPARATELY SPECIFY:

D (1) Planes Conference Table – Interior Leg
(Square, Hex or Rectangular)
TAR_-_ _ _ _

OR

(1) Reside Table
(Square or Rectangular)
TKR_-_ _ _ _

OR

(1) Planes Conference Table – Perimeter Leg
(Square or Rectangular)
TAR_-_ _ _ _

+

**Step 4 -Cable Management:**

SEPARATELY SPECIFY:

E (1) Cable Base
TA01-_ _14-_

F (1) Wire Manager– Horizontal
EUAW

Note **Table mount applications specified with longer tables may require the Power Relay Cord be located farther than 6' away from the Processor. These applications require replacing the standard 6' Power Relay Data Cable (included with the Switching Interface Module) with a longer separately specified Power Relay Data Cable (EWCX-_ _01-PR). The cable must be specified with sufficient length to reach from the Processor to the location of the Power Relay Cord (usually near the monitor).**

## Cable Sharing with Touch Control – Dual Monitor – Wall Mount Application

• See the Cabling Diagram on the previous pages for a more detailed list of components.

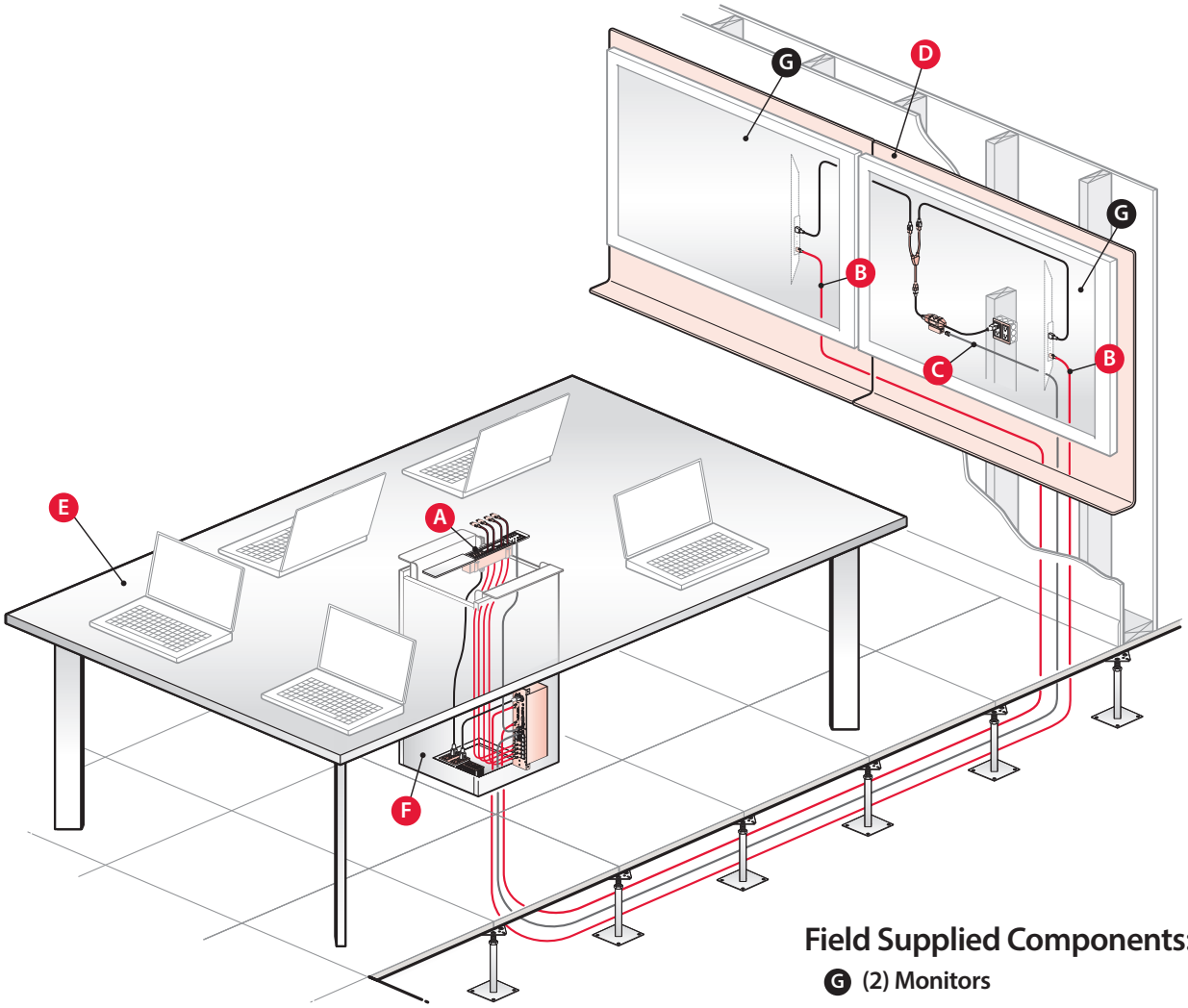


### Field Supplied Components:

G (2) Monitors

### Separately Specified Components:

**Step 1 - Technology:**

SEPARATELY SPECIFY:

A (1) Interface Module – Switching
EWC_-_ _ _ _-CPS_BN_ _

B (2) HDMI Cable
EWCX-_ _01-H

**CABLE LENGTH:** Cable lengths should be specified to reach from processor to the monitor.

C (1) Power Relay Data Cable
EWCX-_ _01-PR

**CABLE LENGTHS**: Specify cable lengths to reach from processor to the Power Relay Cord (near monitor).

+

**Step 2 - Monitor Support:**

SEPARATELY SPECIFY:

D (1) workware view – Enclose Wall Mount – Dual Monitors
EWVE-D_SS-PP

OR

(1) workware view – Structural Wall Mount – Dual Monitors
EWVD-D_SS-PP

+

**Step 3 - Table:**

SEPARATELY SPECIFY:

E (1) Planes Conference Table – Interior Leg
(Square, Hex or Rectangular)
TAR_-_ _ _ _

OR

(1) Reside Table
(Square or Rectangular)
TKR_-_ _ _ _

OR

(1) Planes Conference Table – Perimeter Leg
(Square or Rectangular)
TAR_-_ _ _ _

Note Wall mount applications may not require a table.

+

**Step 4 -Cable Management:**

SEPARATELY SPECIFY:

F (1) Cable Base
TA01-_ _14-_

Note **Wall mount applications locate the Power Relay Cord near the monitor and away from the Processor. These applications require replacing the 6' Power Relay Data Cable (included with the Switching Interface Module) with a longer separately specified Power Relay Data Cable (EWCX-_ _01-PR). The cable must be specified with sufficient length to reach from the Processor to the location of the Power Relay Cord (near the monitor).**

# Product Application – Wireless Sharing

## Wireless Sharing – Single Monitor Application

| | |
|---|---|
| **Sharing Method:** How users share their presentation on the Monitor. | **Wireless Sharing**<br>• Presenters use workware's Wireless Presentation Software to access the building's wireless wi-fi network which provides them audio/video access to the monitor to share presentations. |
| **Switching Method:** How users switch the monitor presentation to other users. | **Wireless Switching**<br>• Users may switch between wireless presenters using controls on workware's Wireless Presentation Software (WPS). |
| **Maximum Number of Connections to the Monitor:** | **Wireless Connections**<br>• A maximum of up to 250 wireless users may log into each wireless session (depending on the capacity of the building's wireless network). |
| **Monitor Power Control:** | **Monitor Remote Control**<br>• Monitor power is controlled using the monitor remote control (field supplied) or the power button on the monitor. |
| **Quad View Feature:** Displays four users on one screen. | **Quad View is available for wireless users.** |
| **Advantages:** | • Simple configuration.<br>• Mobility for wireless users.<br>• Wireless Presentation Software makes switching between presenters quick and easy. |

## Separately Specified Components:

### Step 1 - Technology:

SEPARATELY SPECIFY:

**A (1) Wireless Module**
• See Price List For Current Model

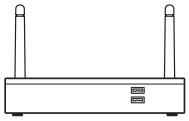

**B (1) HDMI Cable**
EWCX-_ _ 01-H

**CABLE LENGTHS**: Specify cable lengths to reach from Wireless Module to the video connection on the back of the monitor.

**C (1) Interface Module – Non-Switching (optional)**
EWC_-_ _-NPS_BN_

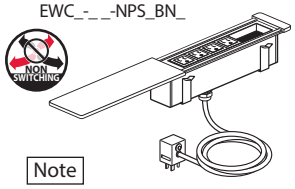


Note

The Wireless Sharing application does not require an Interface Module consider this option if users require power access for their devices.

### Step 2 - Monitor Support:

SEPARATELY SPECIFY:

**D (1) workware view Table Mount**
EWVT-S_ _D-P

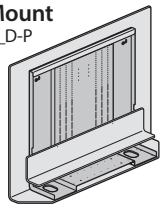

OR

**(1) workware view Enclose Wall Mount**
EWVE-S_ _ _-P_

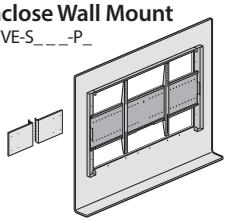

OR

**(1) workware view Structural Wall Mount**
EWVD-S_ _ _-P_

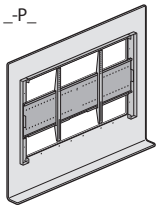

### Step 3 - Table:

SEPARATELY SPECIFY:

**E (1) Planes Conference Table – Interior Leg**
(Square, Hex or Rectangular)
TAR_-_ _ _ _

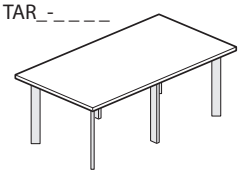

OR

**(1) Planes Conference Table – Perimeter Leg**
(Square or Rectangular)
TAR_-_ _ _ _

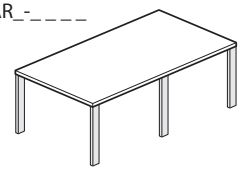

OR

**(1) Reside Table**
(Square or Rectangular)
TKR_- _ _ _ _

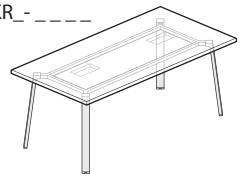

### Step 4 -Cable Management:

SEPARATELY SPECIFY:

**F (1) Cable Base**
TA01-_ _14-_

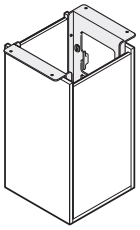

**G (1) Wire Manager – Horizontal**
(not required with wall mount applications)
EUAW

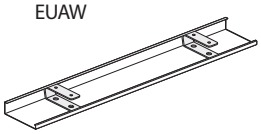

## Field Supplied Components:

**H (1) Monitor**
(Field Supplied)

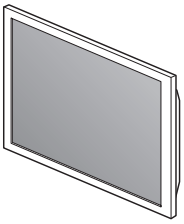

**I (1) Data Cable with RJ-45 Connectors**
(Required – Field Supplied)

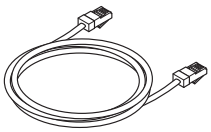

**CABLE LENGTH**: cable length should be specified to reach from the Wireless Module to the network connection point.

# Product Application – Wireless Sharing

## Wireless Sharing – Single Monitor Application Cabling Diagram

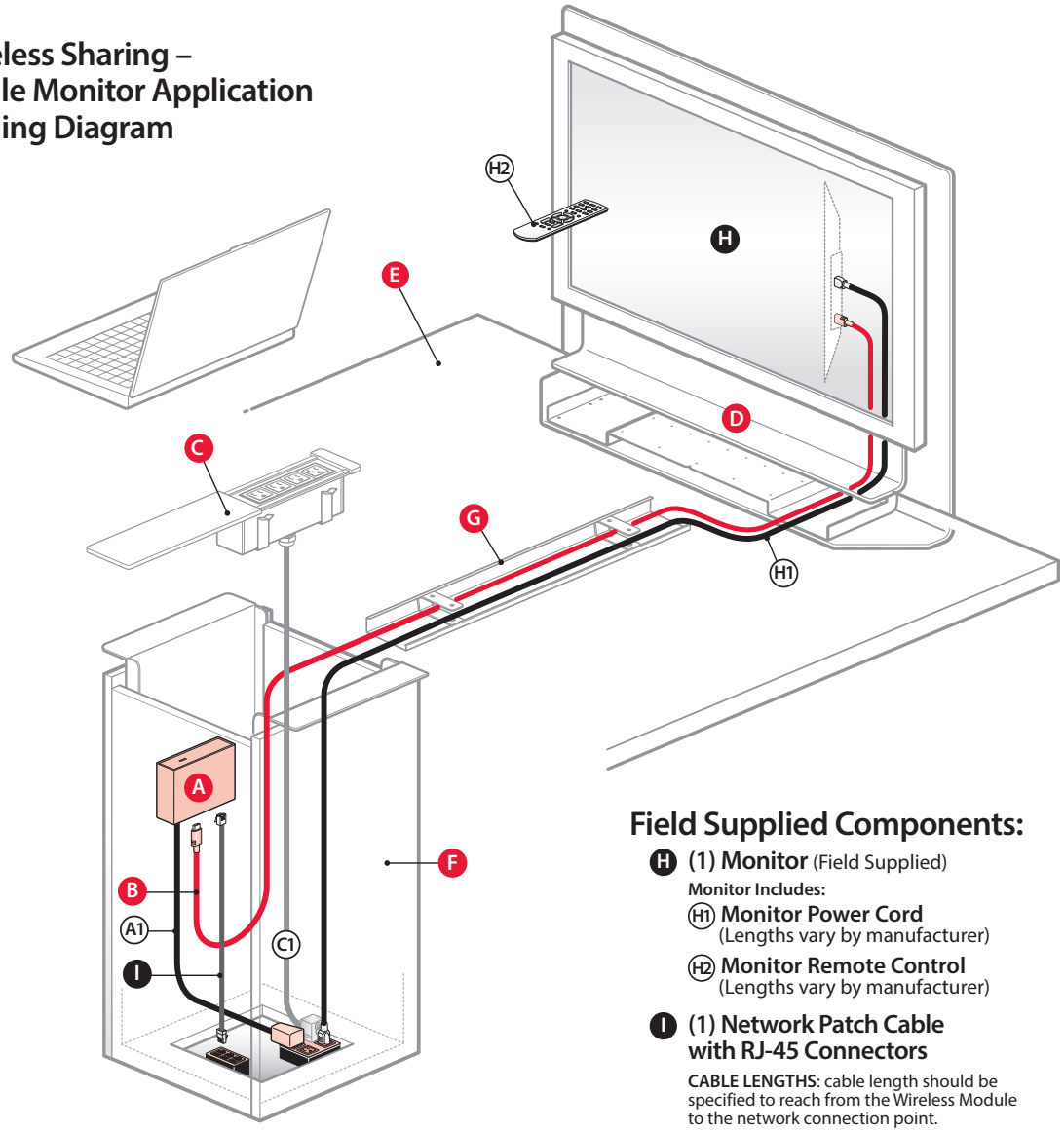


### Field Supplied Components:

**H (1) Monitor** (Field Supplied)

**Monitor Includes:**

**H1 Monitor Power Cord**
(Lengths vary by manufacturer)

**H2 Monitor Remote Control**
(Lengths vary by manufacturer)

**I (1) Network Patch Cable with RJ-45 Connectors**

**CABLE LENGTHS**: cable length should be specified to reach from the Wireless Module to the network connection point.

### Separately Specified Components:

#### Step 1 - Technology:

**SEPARATELY SPECIFY:**

**A (1) Wireless Module**
• See Price List for current model

**A1 Wireless Module Power Cord**
(See Price List for current model cord lengths)

**B (1) HDMI Cable**
EWCX-_ _ 01-H

**CABLE LENGTHS**: Specify cable lengths to reach from Wireless Module to the video connection on the back of the monitor.

**C (1) Interface Module – Non-Switching (optional)**
EWC_-_ _-NPS_BN_

**Non-Switching Interface Module Includes:**

**C1 (1) Interface Module Power Cord** (Corded 12' long or Hardwired 6' long)

Note

The Wireless Sharing application does not require an Interface Module consider this option if users require power access for their devices.

+

#### Step 2 - Monitor Support:

**SEPARATELY SPECIFY:**

**D (1) workware view Table Mount**
EWVT-S_ _D-P

OR

**(1) workware view Enclose Wall Mount**
EWVE-S_ _ _-P_

OR

**(1) workware view Structural Wall Mount**
EWVD-S_ _ _-P_

+

#### Step 3 - Table:

**SEPARATELY SPECIFY:**

**E (1) Planes Conference Table – Interior Leg**
(Square, Hex or Rectangular)
TAR_-_ _ _ _

OR

**(1) Reside Table**
(Square or Rectangular)
TKR_- _ _ _ _

OR

**(1) Planes Conference Table – Perimeter Leg**
(Square or Rectangular)
TAR_-_ _ _ _

+

#### Step 4 -Cable Management:

**SEPARATELY SPECIFY:**

**F (1)Cable Base**
TA01-_ _14-_

**G (1) Wire Manager– Horizontal**
(not required with wall mount applications)
EUAW

Note

Wall mount applications may not require wire management.

# Product Application – Wireless Sharing

## Wireless Sharing – Single Monitor – Table Mount Application

• See the Cabling Diagram on the previous pages for a more detailed list of components.

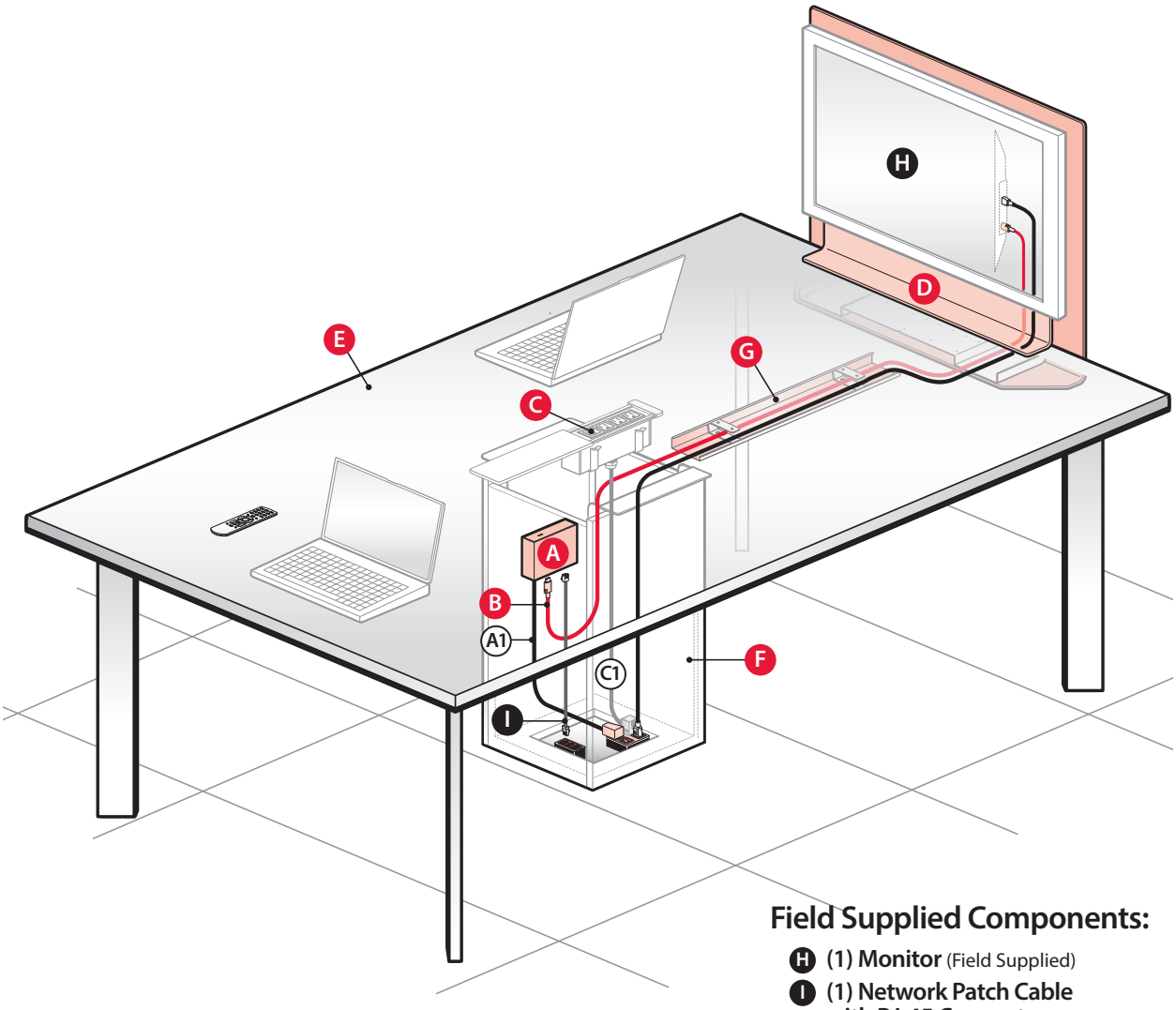


### Field Supplied Components:

- **H** **(1) Monitor** (Field Supplied)
- **I** **(1) Network Patch Cable with RJ-45 Connectors**

**CABLE LENGTHS**: cable length should be specified to reach from the Wireless Module to the network connection point.

### Separately Specified Components:

#### Step 1 - Technology:

SEPARATELY SPECIFY:

**A** **(1) Wireless Module**
• See Price List for current model

**B** **(1) HDMI Cable**
EWCX-_ _ 01-H

**CABLE LENGTHS**: Specify cable lengths to reach from Wireless Module to the video connection on the back of the monitor.

**C** **(1) Interface Module – Non-Switching** (optional)
EWC_-_ _ _ _-NPS_BN_ _

Note

The Wireless Sharing application does not require an Interface Module consider this option if users require power access for their devices.

+

#### Step 2 - Monitor Support:

SEPARATELY SPECIFY:

**D** **(1) workware view Table Mount**
EWVT-S_ _D-P

+

#### Step 3 - Table:

SEPARATELY SPECIFY:

**E** **(1) Planes Conference Table – Interior Leg**
(Square, Hex or Rectangular)
TAR_-_ _ _ _

OR

**(1) Reside Table**
(Square or Rectangular)
TKR_- _ _ _ _

OR

**(1) Planes Conference Table – Perimeter Leg**
(Square or Rectangular)
TAR_-_ _ _ _

+

#### Step 4 -Cable Management:

SEPARATELY SPECIFY:

**F** **(1) Cable Base**
TA01-_ _14-_

**G** **(1) Wire Manager– Horizontal**
EUAW

# Product Application – Wireless Sharing

## Wireless Sharing – Single Monitor – Wall Mount Application

• See the Cabling Diagram on the previous pages for a more detailed list of components.

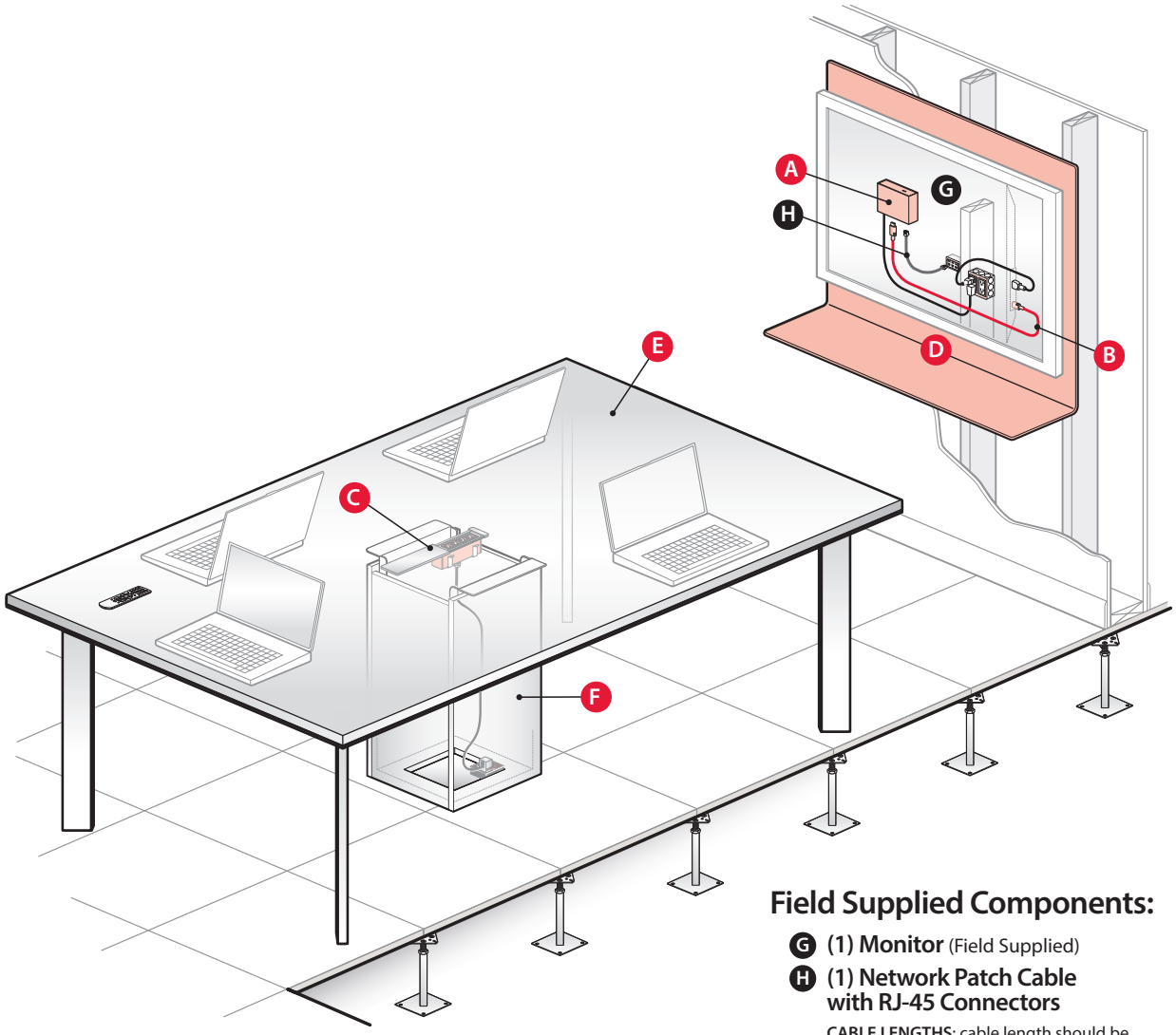


### Field Supplied Components:

**G (1) Monitor** (Field Supplied)

**H (1) Network Patch Cable with RJ-45 Connectors**

**CABLE LENGTHS**: cable length should be specified to reach from the Wireless Module to the network connection point.

### Separately Specified Components:

**Step 1 - Technology:**

SEPARATELY SPECIFY:

**A (1) Wireless Module**
• See Price List for current model

**B (1) HDMI Cable**
EWCX-__01-H

**CABLE LENGTHS:** Specify cable lengths to reach from Wireless Module to the video connection on the back of the monitor.

**C (1) Interface Module – Non-Switching** (optional)
EWC_-_____-NPS_BN__

Note
The Wireless Sharing application does not require an Interface Module consider this option if users devices require power access.

+

**Step 2 - Monitor Support:**

SEPARATELY SPECIFY:

**D (1) workware view Enclose Wall Mount**
EWVE-S___-P_

OR

**(1) workware view Structural Wall Mount**
EWVD-S___-P_

+

**Step 3 - Table:**

SEPARATELY SPECIFY:

**E (1) Planes Conference Table – Interior Leg**
(Square, Hex or Rectangular)
TAR_-____

OR

**(1) Reside Table**
(Square or Rectangular)
TKR_-____

OR

**(1) Planes Conference Table – Perimeter Leg**
(Square or Rectangular)
TAR_-____

Note Wall mount applications may not require a table.

+

**Step 4 -Cable Management:**

SEPARATELY SPECIFY:

**F (1) Cable Base**
TA01-__14-_

# Product Application – Wireless Sharing

## Wireless Sharing – Dual Monitor Application

| | |
|---|---|
| **Sharing Method:** How users share their presentation on the Monitor. | **Wireless Sharing**<br>• Presenters use workware's Wireless Presentation Software to access the building's wireless wi-fi network which provides them audio/video access to the monitor to share presentations. |
| **Switching Method:** How users switch the monitor presentation to other users. | **Wireless Switching**<br>• Users may switch between wireless presenters using controls on workware's Wireless Presentation Software (WPS). |
| **Maximum Number of Connections to the Monitor:** | **Wireless Connections**<br>• A maximum of up to 250 wireless users may log into each wireless session (depending on the capacity of the building's wireless network). |
| **Monitor Power Control:** | **Monitor Remote Control**<br>• Monitor power is controlled using the monitor remote control (field supplied) or the power button on the monitor. |
| **Quad View Feature:** Displays four users on one screen. | **Quad View is available for wireless users.** |
| **Advantages:** | • Simple configuration.<br>• Mobility for wireless users.<br>• Wireless Presentation Software makes switching between presenters quick and easy. |

## Separately Specified Components:

### Step 1 - Technology:

SEPARATELY SPECIFY:

**A (2) Wireless Modules**
• See Price List For Current Model

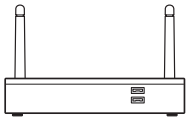

**B (2) HDMI Cable**
EWCX-__01-H

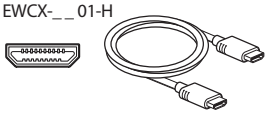

**CABLE LENGTHS**: Specify cable lengths to reach from Wireless Module to the video connection on the back of the monitor.

**C (1) Interface Module – Non-Switching (optional)**
EWC_-_ _ _ _-NPS_BN__

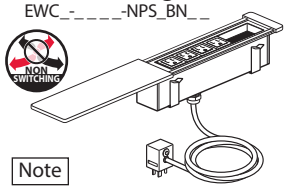


Note

The Wireless Sharing application does not require an Interface Module consider this option if users require power access for their devices.

### Step 2 - Monitor Support:

SEPARATELY SPECIFY:

**D (1) workware view Table Mount – Dual Monitor**
EWVT-DC_D-P

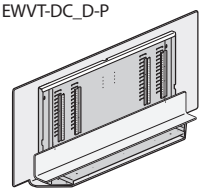

OR

**(1) workware view – Enclose Wall Mount – Dual Monitors**
EWVE-D_SS-PP

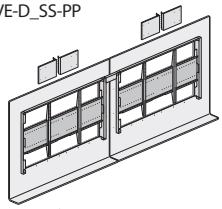

OR

**(1) workware view – Structural Wall Mount – Dual Monitors**
EWVD-D_SS-PP

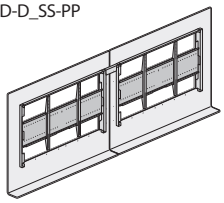

### Step 3 - Table:

SEPARATELY SPECIFY:

**E (1) Planes Conference Table – Interior Leg**
(Square, Hex or Rectangular)
TAR_-_ _ _ _

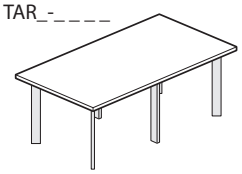

OR

**(1) Planes Conference Table – Perimeter Leg**
(Square or Rectangular)
TAR_-_ _ _ _

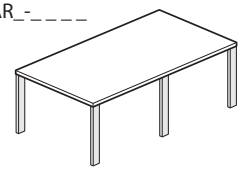

OR

**(1) Reside Table**
(Square or Rectangular)
TKR_- _ _ _ _

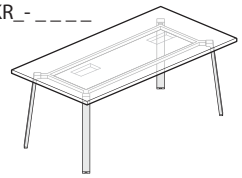

### Step 4 -Cable Management:

SEPARATELY SPECIFY:

**F (1) Cable Base**
TA01-__14-_

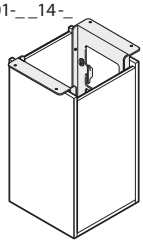

**G (1) Wire Manager– Horizontal**
(not required with wall mount applications)
EUAW

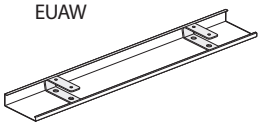

## Field Supplied Components:

**H (2) Monitors**
(Field Supplied)

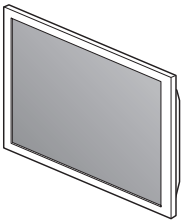

**I (2) Data Cable with RJ-45 Connector**
(Required – Field Supplied)

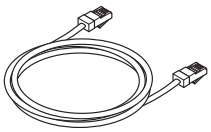

**CABLE LENGTH**: cable length should be specified to reach from the Wireless Module to the network connection point.

## Wireless Sharing – Dual Monitor Application – Cabling Diagram

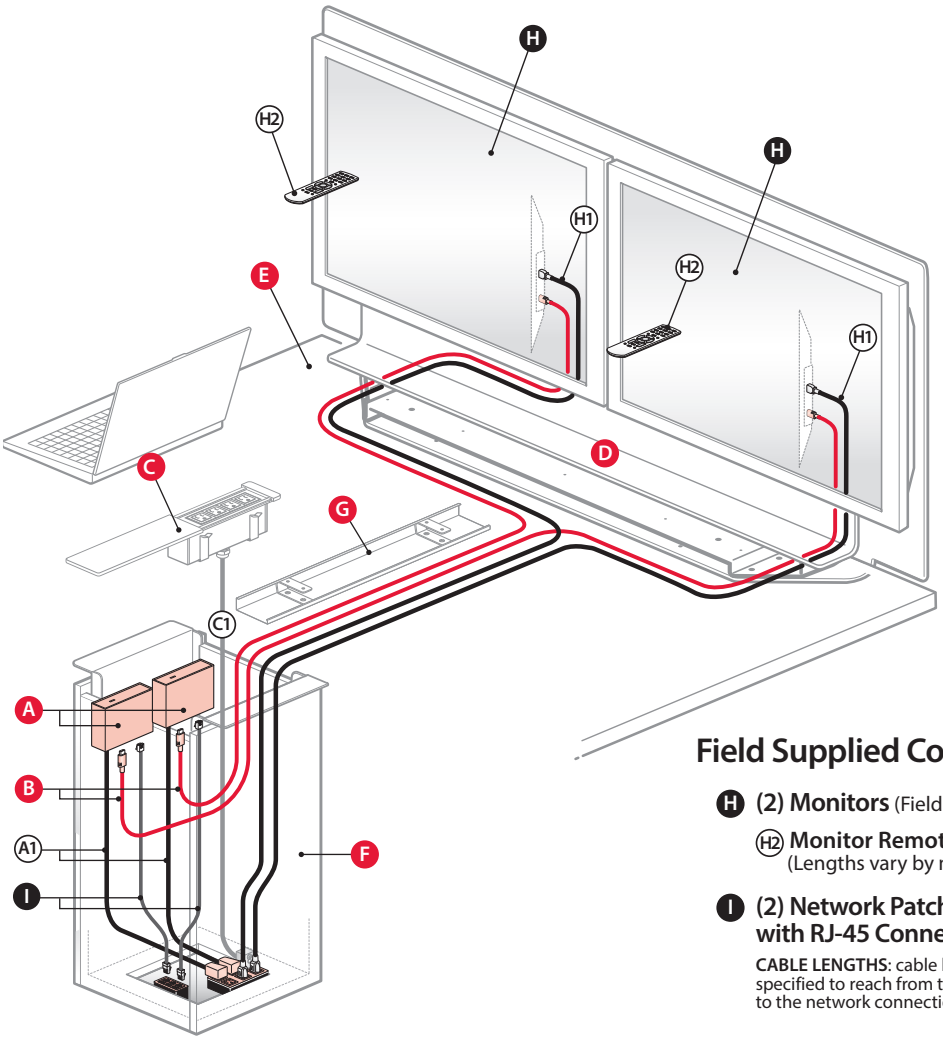


### Field Supplied Components:

**H** **(2) Monitors** (Field Supplied)

**H2** **Monitor Remote Control** (Lengths vary by manufacturer)

**I** **(2) Network Patch Cable with RJ-45 Connectors**

**CABLE LENGTHS**: cable length should be specified to reach from the Wireless Module to the network connection point.

### Separately Specified Components:

#### Step 1 - Technology:

SEPARATELY SPECIFY:

**A** **(2) Wireless Modules**
- See Price List For Current Model

**A1** **Wireless Module Power Cord**
(See Price List for current model cord lengths)

**B** **(2) HDMI Cable**
EWCX-_ _ 01-H

**CABLE LENGTHS**: Specify cable lengths to reach from Wireless Module to the video connection on the back of the monitor.

**C** **(1) Interface Module – Non-Switching** (optional)
EWC_-_ _ _ _-NPS_BN_ _

**Non-Switching Interface Module Includes:**

**C1** **(1) Interface Module Power Cord** (Corded 12' long or Hardwired 6' long)

Note

The Wireless Sharing application does not require an Interface Module consider this option if users require power access for their devices.

+

#### Step 2 - Monitor Support:

SEPARATELY SPECIFY:

**D** **(1) workware view Table Mount – Dual Monitor**
EWVT-DC_D-P

OR

**(1) workware view – Enclose Wall Mount – Dual Monitors**
EWVE-D_SS-PP

OR

**(1) workware view – Structural Wall Mount – Dual Monitors**
EWVD-D_SS-PP

+

#### Step 3 - Table:

SEPARATELY SPECIFY:

**E** **(1) Planes Conference Table – Interior Leg**
(Square, Hex or Rectangular)
TAR_-_ _ _ _

OR

**(1) Reside Table**
(Square or Rectangular)
TKR_- _ _ _ _

OR

**(1) Planes Conference Table – Perimeter Leg**
(Square or Rectangular)
TAR_-_ _ _ _

+

#### Step 4 -Cable Management:

SEPARATELY SPECIFY:

**F** **(1) Cable Base**
TA01-_ _14-_

**G** **(1) Wire Manager – Horizontal**
(not required with wall mount applications)
EUAW

Note

Wall mount applications may not require wire management.

# Product Application – Wireless Sharing

## Wireless Sharing – Dual Monitor – Table Mount Application

• See the Cabling Diagram on the previous pages for a more detailed list of components.

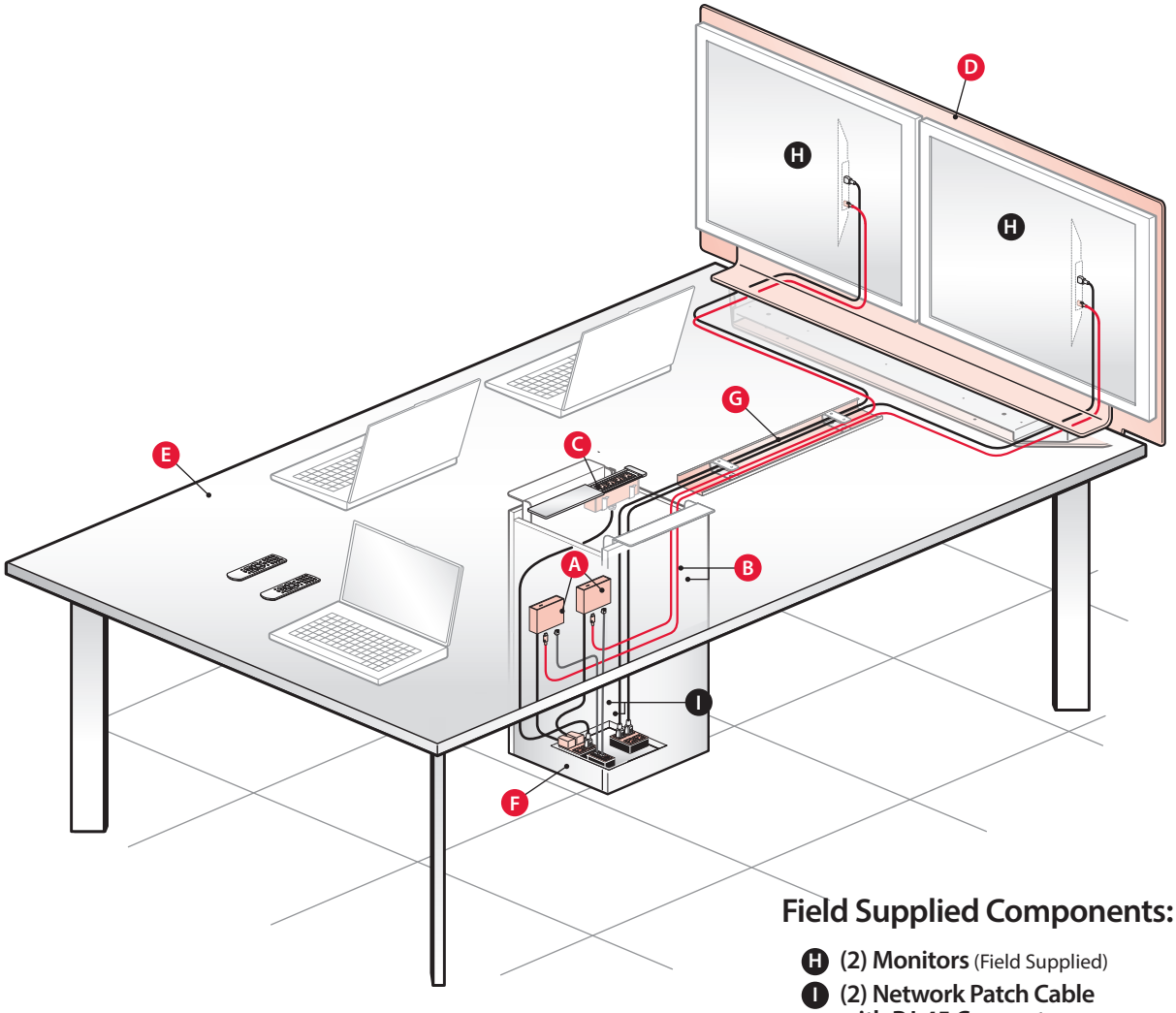


### Field Supplied Components:

**H** **(2) Monitors** (Field Supplied)

**I** **(2) Network Patch Cable with RJ-45 Connectors**

**CABLE LENGTHS**: cable length should be specified to reach from the Wireless Module to the network connection point.

### Separately Specified Components:

#### Step 1 - Technology:

SEPARATELY SPECIFY:

**A** **(2) Wireless Modules**
• See Price List For Current Model

**B** **(2) HDMI Cable**
EWCX-_ _ 01-H

**CABLE LENGTHS**: Specify cable lengths to reach from Wireless Module to the video connection on the back of the monitor.

**C** **(1) Interface Module – Non-Switching** (optional)
EWC_-_ _ _ _-NPS_BN_ _

Note

The Wireless Sharing application does not require an Interface Module consider this option if users require power access for their devices.

+

#### Step 2 - Monitor Support:

SEPARATELY SPECIFY:

**D** **(1) workware view Table Mount – Dual Monitor**
EWVT-DC_D-P

+

#### Step 3 - Table:

SEPARATELY SPECIFY:

**E** **(1) Planes Conference Table – Interior Leg**
(Square, Hex or Rectangular)
TAR_-_ _ _ _

OR

**(1) Reside Table**
(Square or Rectangular)
TKR_- _ _ _ _

OR

**(1) Planes Conference Table – Perimeter Leg**
(Square or Rectangular)
TAR_-_ _ _ _

+

#### Step 4 -Cable Management:

SEPARATELY SPECIFY:

**F** **(1) Cable Base**
TA01-_ _14-_

**G** **(1) Wire Manager – Horizontal**
EUAW

## Wireless Sharing – Dual Monitor Application – Wall Mount Application

• See the Cabling Diagram on the previous pages for a more detailed list of components.

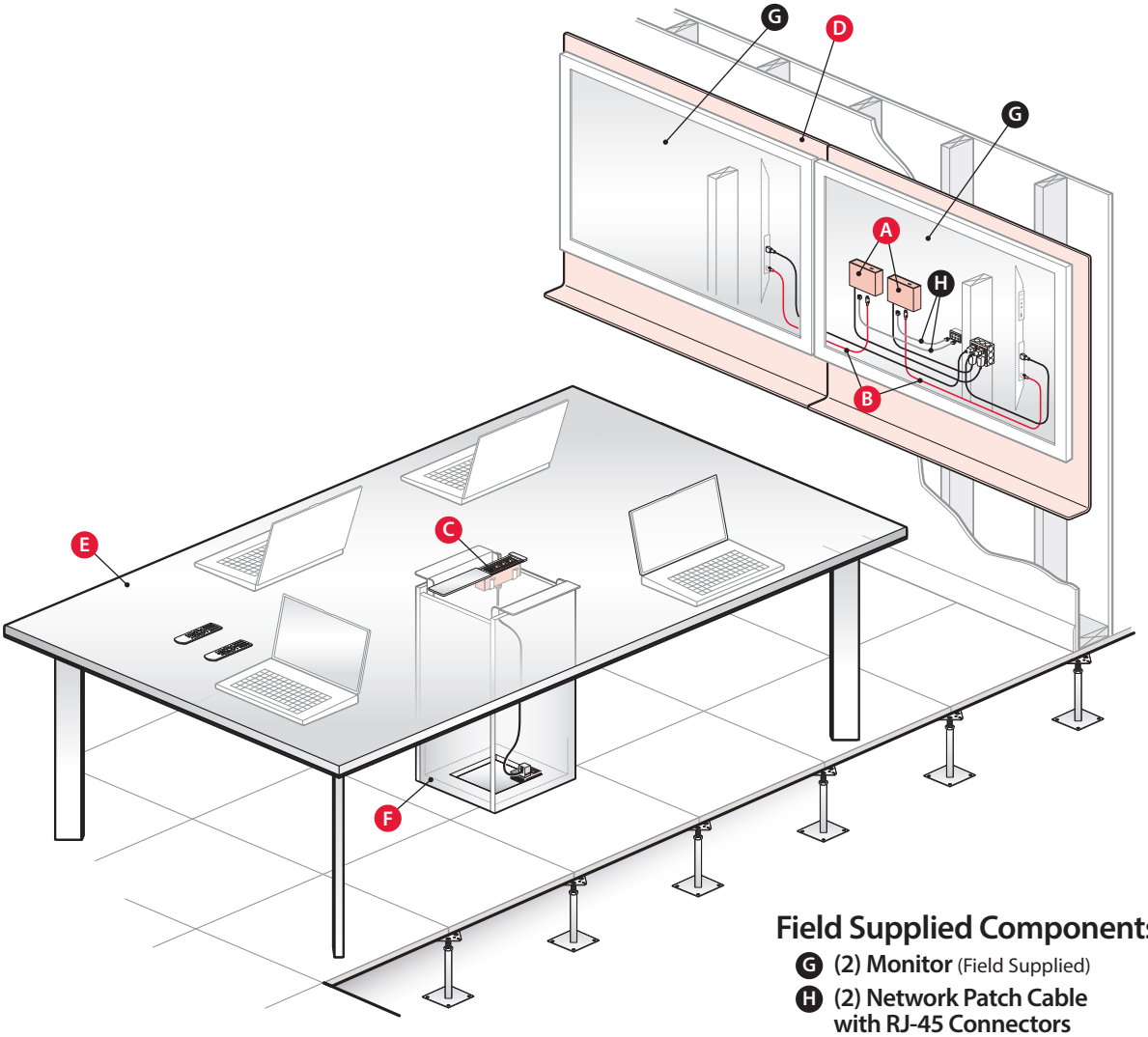


### Field Supplied Components:

**G (2) Monitor** (Field Supplied)

**H (2) Network Patch Cable with RJ-45 Connectors**

**CABLE LENGTHS**: cable length should be specified to reach from the Wireless Module to the network connection point.

### Separately Specified Components:

#### Step 1 - Technology:

**SEPARATELY SPECIFY:**

**A (2) Wireless Modules**
• See Price List For Current Model

**B (2) HDMI Cable**
EWCX-_ _ 01-H

**CABLE LENGTHS**: Specify cable lengths to reach from Wireless Module to the video connection on the back of the monitor.

**C (1) Interface Module – Non-Switching** (optional)
EWC_-_ _ _ _-NPS_BN_ _

Note

The Wireless Sharing application does not require an Interface Module consider this option if users require power access for their devices.

+

#### Step 2 - Monitor Support:

**SEPARATELY SPECIFY:**

**D (1) workware view – Enclose Wall Mount – Dual Monitors**
EWVE-D_SS-PP

OR

**(1) workware view – Structural Wall Mount – Dual Monitors**
EWVD-D_SS-PP

+

#### Step 3 - Table:

**SEPARATELY SPECIFY:**

**E (1) Planes Conference Table – Interior Leg**
(Square, Hex or Rectangular)
TAR_-_ _ _ _

OR

**(1) Reside Table**
(Square or Rectangular)
TKR_- _ _ _ _

OR

**(1) Planes Conference Table – Perimeter Leg**
(Square or Rectangular)
TAR_-_ _ _ _

Note Wall mount applications may not require a table.

+

#### Step 4 -Cable Management:

**SEPARATELY SPECIFY:**

**F (1) Cable Base**
TA01-_ _14-_

# Product Applications – Wireless Sharing with Cable Backup

## Wireless Sharing with Cable Backup – Single Monitor Application

| | |
|---|---|
| **Sharing Methods:** How users share their presentation on the Monitor. | **Wireless Sharing With Touch Control**<br>• Using the Touch Control, users may switch the system to wireless mode and use workware's Wireless Presentation Software to access the building's wireless wi-fi network which provides them audio/video access to the monitor to share presentations.<br>**Cabled Sharing With Touch Control**<br>• Presenters may access the monitor to share a presentation by connecting audio/video cables to their device and activating the cables corresponding button on the Touch Control. |
| **Switching Method:** How users switch the monitor presentation to other users. | **Touch Control Switching**<br>• Users may switch the monitor presentation to other users by activating the corresponding button on the Touch Control.<br>**Wireless Switching**<br>• When the Wireless Mode is active, users may switch between wireless presenters using controls on workware's wireless presentation software. |
| **Maximum Number of Connections to the Monitor:** | **Cabled Connections**<br>• The Switching Interface Module can accommodate a maximum of (4) audio/video cables from each processor.<br>**Wireless Connections**<br>• A maximum of up to 250 wireless users may log into each wireless session (depending on the capacity of the building's wireless network). |
| **Monitor Power Control:** | • The Switching Interface Module can accommodate a maximum of (4) audio/video cables from each processor. Up to 3 Switching Interface Modules may be daisy chained together allowing a maximum of 12 cabled users (4 cables from each processor) sharing the same monitor(s). |
| **Quad View Feature:** Displays four users on one screen. | • Quad View is available for wireless users. |
| **Advantages:** | • A maximum of up to 250 wireless users may log into each wireless session (depending on the capacity of the building's wireless network). |

## Separately Specified Components:

### Step 1 - Technology:

SEPARATELY SPECIFY:

**A (1) Interface Module – Switching**
EWC_-_ _ _ _-CPS_BN_ _

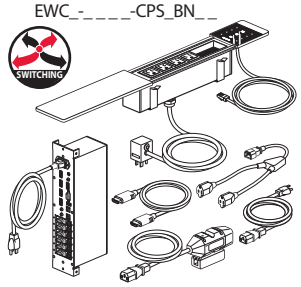


User Audio/Video Cable Options:

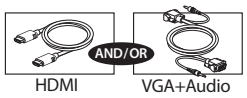


**B (1) Wireless Module**
• See Price List For Current Model

**C (1) HDMI Cable**
EWCX-_ _ 01-H

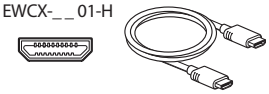

**CABLE LENGTHS**: Specify cable lengths to reach from processor to the video connection on the back of the monitor.

### Step 2 - Monitor Support:

SEPARATELY SPECIFY:

**D (1) workware view Table Mount**
EWVT-S_ _D-P

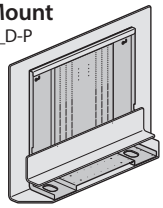

OR

**(1) workware view Enclose Wall Mount**
EWVE-S_ _ _-P_

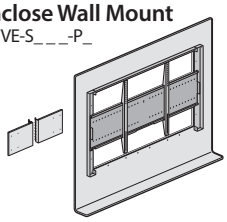

OR

**(1) workware view Structural Wall Mount**
EWVD-S_ _ _-P_

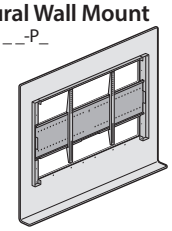

### Step 3 - Table:

SEPARATELY SPECIFY:

**E (1) Planes Conference Table – Interior Leg**
(Square, Hex or Rectangular)
TAR_-_ _ _ _

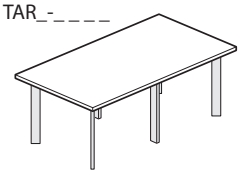

OR

**(1) Planes Conference Table – Perimeter Leg**
(Square or Rectangular)
TAR_-_ _ _ _

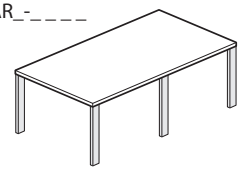

OR

**(1) Reside Table**
(Square or Rectangular)
TKR_- _ _ _ _

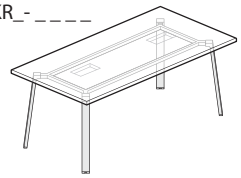

### Step 4 -Cable Management:

SEPARATELY SPECIFY:

**F (1) Cable Base**
TA01-_ _14-_

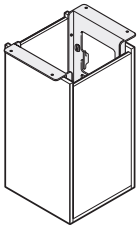

**G (1) Wire Manager–Horizontal**
(not required with wall mount applications)
EUAW

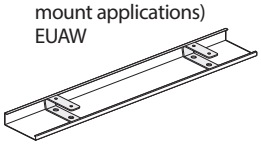

## Field Supplied Components:

**H (1) Monitor**
(Field Supplied)

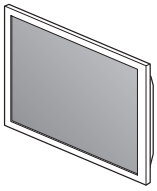

**I (1) Data Cable with RJ-45 Connectors**
(Required – Field Supplied)

**CABLE LENGTH**: cable length should be specified to reach from the Wireless Module to the network connection point.

# Product Applications – Wireless Sharing with Cable Backup

## Wireless Sharing with Cable Backup – Single Monitor Application – Cabling Diagram

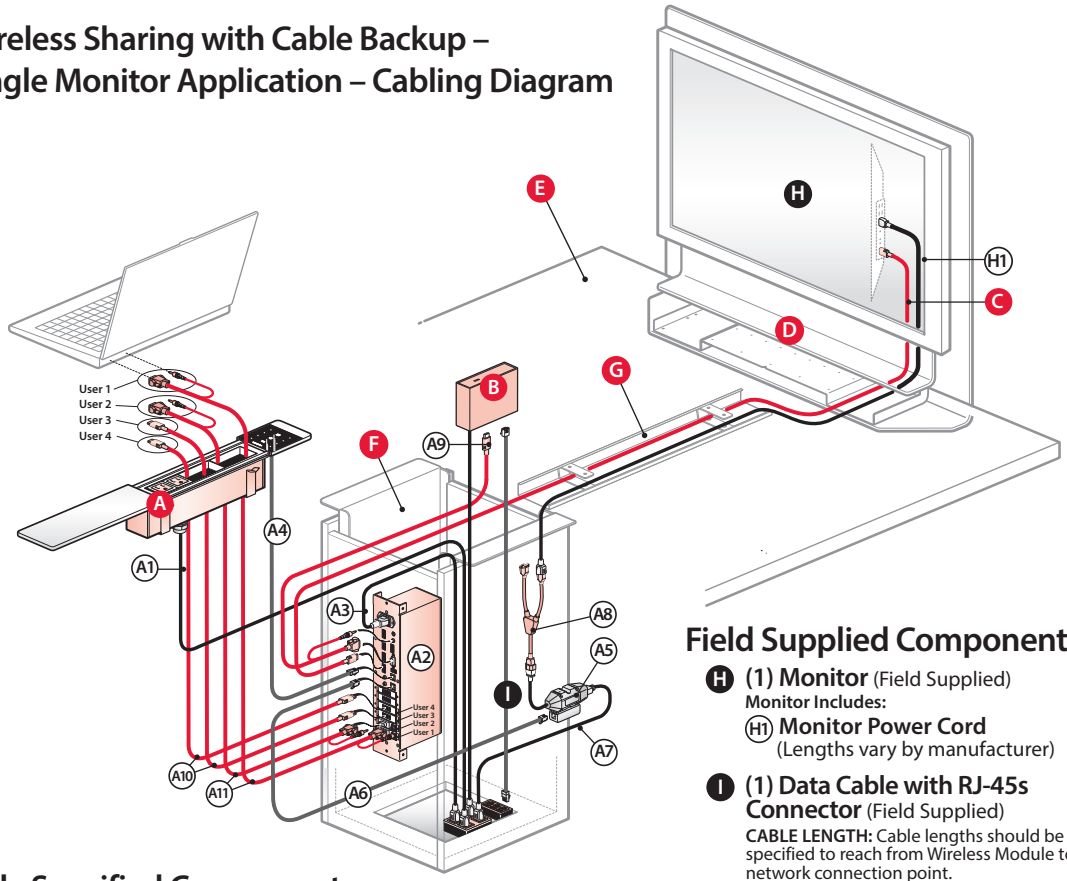


## Field Supplied Components:

**H (1) Monitor** (Field Supplied)
**Monitor Includes:**
**H1 Monitor Power Cord**
(Lengths vary by manufacturer)

**I (1) Data Cable with RJ-45s Connector** (Field Supplied)
**CABLE LENGTH:** Cable lengths should be specified to reach from Wireless Module to the network connection point.

## Separately Specified Components:

### Step 1 - Technology:

**SEPARATELY SPECIFY:**

**A (1) Interface Module – Switching**
EWC_-_ _ _ _-CPS_BN_ _
**Switching Interface Module Includes:**
- **A1 (1) Interface Module Power Cord** (Corded 12' long or Hardwired 6' long)
- **A2 (1) Processor**
- **A3 (1) Processor Power Cord** (6' long)
- **A4 (1) Touch Control Data Cable** (6' long)
- **A5 (1) Power Relay Cord** (5' long)
- **A6 (1) Power Relay Data Cable** (6' long)
- **A7 (1) Power Relay Adapter Cord A** (6' long)
- **A8 (1) Power Relay Adapter Cord B** (1' long)
- **A9 (1) HDMI** (6' long)

**User A/V Cable Options**
Interface Module may be specified with two or four HDMI and/or VGA+Audio cables (See port options page for more details).
- **A10 (2) HDMI Cable** (10' long)
- **A11 (2) VGA+Audio Cable** (3' long)

**B (1) Wireless Module**
- See Price List For Current Model
- **B1 Wireless Module Power Cable** (5' long)

**C (1) HDMI Cable** EWCX-_ _ 01-H
**CABLE LENGTHS:** Specify cable lengths to reach from processor to the monitor.

### Step 2 - Monitor Support:

**SEPARATELY SPECIFY:**

**D (1) workware view Table Mount**
EWVT-S_ _D-P

OR

**(1) workware view Enclose Wall Mount**
EWVE-S_ _ _-P_

OR

**(1) workware view Structural Wall Mount**
EWVD-S_ _ _-P_

### Step 3 - Table:

**SEPARATELY SPECIFY:**

**E (1) Planes Conference Table – Interior Leg**
(Square, Hex or Rectangular)
TAR_-_ _ _ _

OR

**(1) Reside Table**
(Square or Rectangular)
TKR_- _ _ _ _

OR

**(1) Planes Conference Table – Perimeter Leg**
(Square or Rectangular)
TAR_-_ _ _ _

Note: Wall mount applications may not require a table.

### Step 4 -Cable Management:

**SEPARATELY SPECIFY:**

**F (1)Cable Base**
TA01-_ _14-_

**G (1) Wire Manager– Horizontal**
(not required with wall mount applications)
EUAW

**CAUTION**
- Active HDMI or Directional HDMI cables will cause damage to workware components and should not be used.
- Do not use Power Relay with projectors, to allow proper cool down cycle for projector lamp.

**Note** **Wall mount applications locate the Power Relay Cord near the monitor and away from the Processor. These applications require the 6' Power Relay Data Cable (included with the Switching Interface Module) be replaced with a longer separately specified Power Relay Data Cable (EWCX-_ _01-PR). The cable must be specified with sufficient length to reach from the Processor to the location of the Power Relay Cord (near monitor).**

# Product Applications – Wireless Sharing with Cable Backup

## Wireless Sharing with Cable Backup – Single Monitor – Table Mount Application

• See the Cabling Diagram on the previous pages for a more detailed list of components.

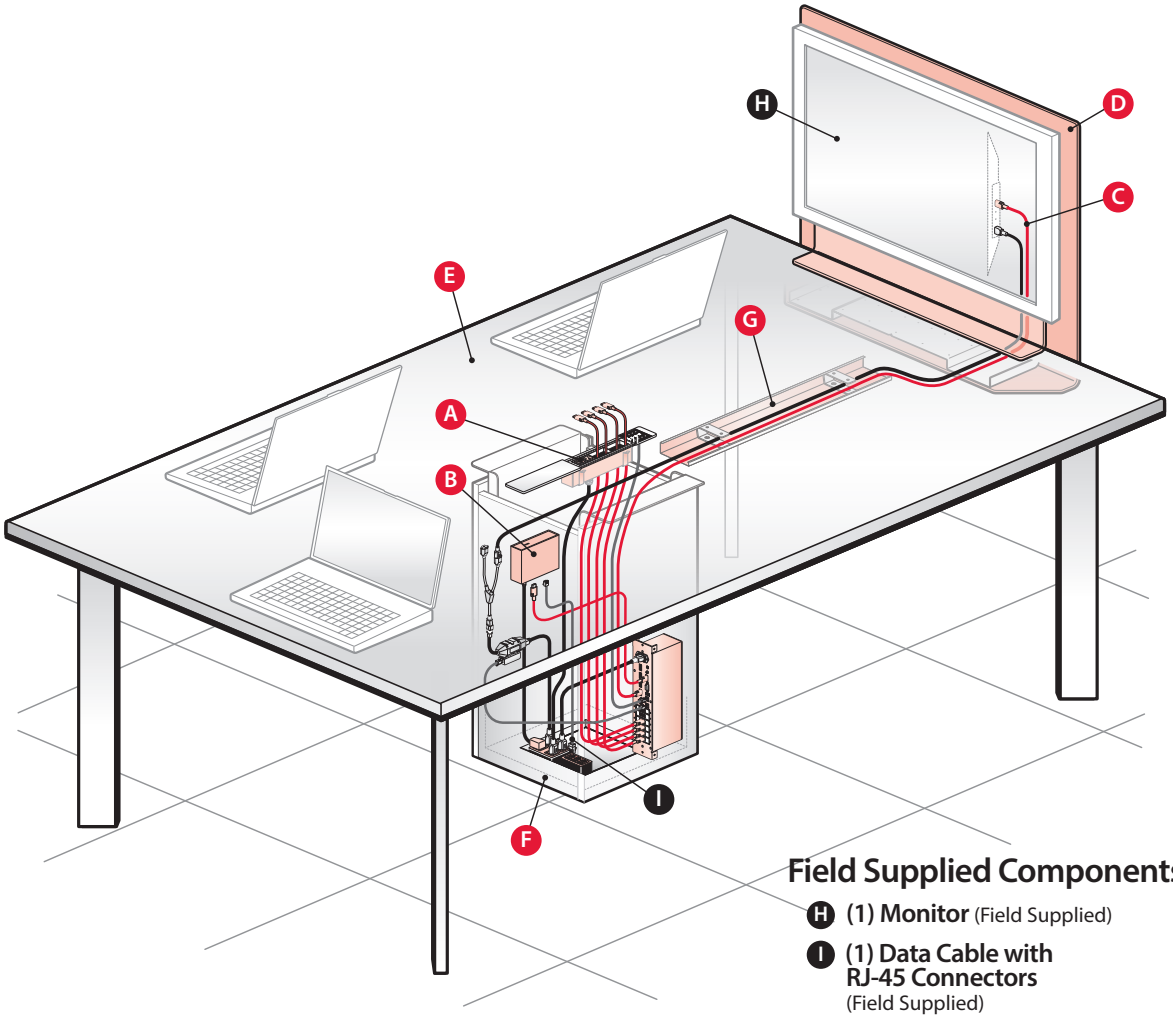


### Field Supplied Components:

- **H** **(1) Monitor** (Field Supplied)
- **I** **(1) Data Cable with RJ-45 Connectors** (Field Supplied)

**CABLE LENGTH:** Cable lengths should be specified to reach from Wireless Module to the network connection point.

## Separately Specified Components :

### Step 1 - Technology:

SEPARATELY SPECIFY:

**A** **(1) Interface Module – Switching**
EWC_-_ _ _ _-CPS_BN_ _

**B** **(1) Wireless Module**
• See Price List For Current Model

**C** **(1) HDMI Cable**
EWCX-_ _ 01-H

**CABLE LENGTHS**: Specify cable lengths to reach from processor to the monitor.

+

### Step 2 - Monitor Support:

SEPARATELY SPECIFY:

**D** **(1) workware view Table Mount**
EWVT-S_ _D-P

+

### Step 3 - Table:

SEPARATELY SPECIFY:

**E** **(1) Planes Conference Table – Interior Leg**
(Square, Hex or Rectangular)
TAR_-_ _ _ _

OR

**(1) Reside Table**
(Square or Rectangular)
TKR_- _ _ _ _

OR

**(1) Planes Conference Table – Perimeter Leg**
(Square or Rectangular)
TAR_-_ _ _ _

+

### Step 4 -Cable Management:

SEPARATELY SPECIFY:

**F** **(1)Cable Base**
TA01-_ _14-_

**G** **(1) Wire Manager– Horizontal**
EUAW

Note **Table mount applications specified with longer tables may require the Power Relay Cord be located farther than 6' away from the Processor. These applications require replacing the standard 6' Power Relay Data Cable (included with the Switching Interface Module) with a longer separately specified Power Relay Data Cable (EWCX-_ _01-PR). The cable must be specified with sufficient length to reach from the Processor to the location of the Power Relay Cord (usually near the monitor).**

## Wireless Sharing with Cable Backup – Single Monitor – Wall Mount Application

• See the Cabling Diagram on the previous pages for a more detailed list of components.

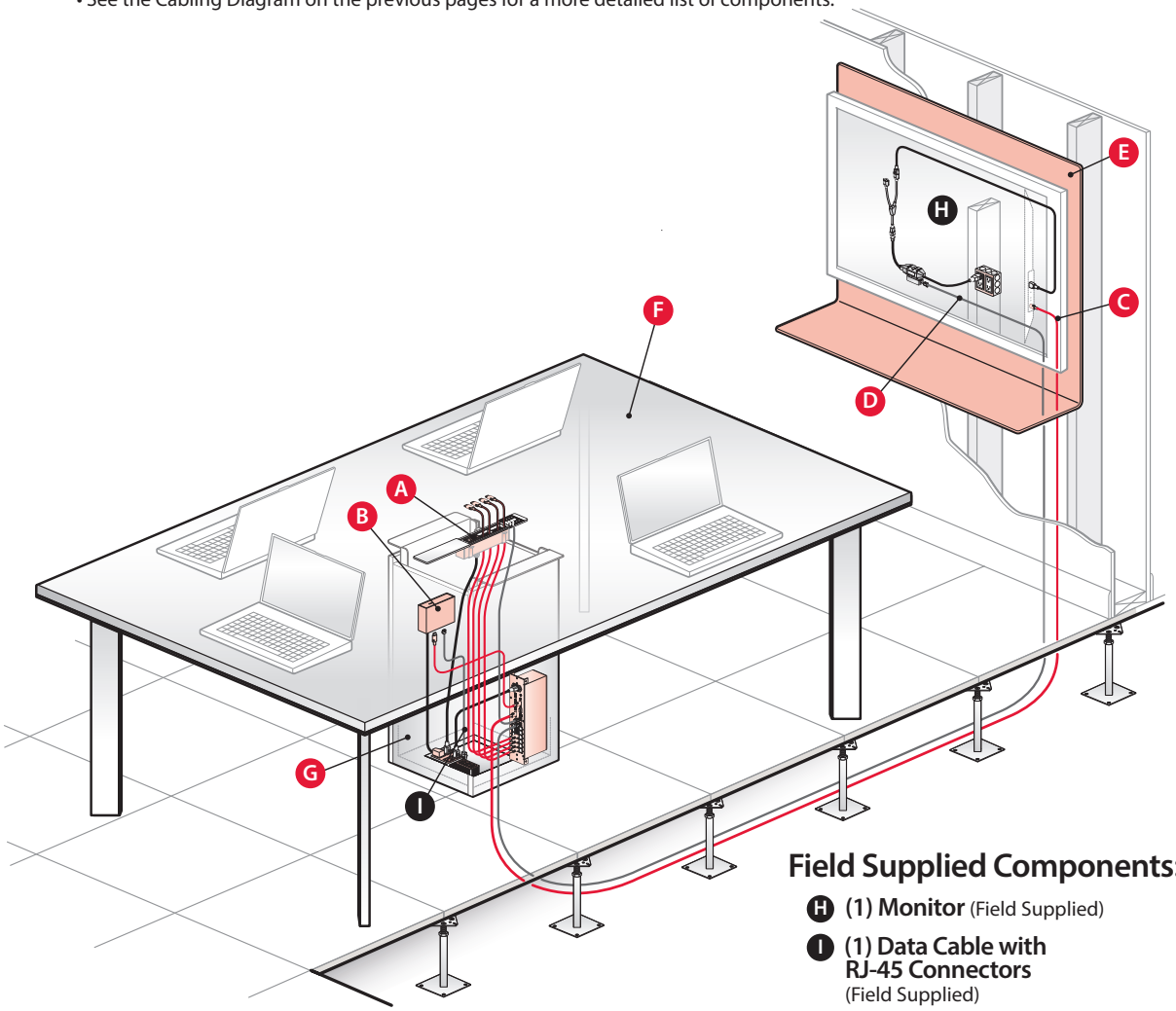


### Field Supplied Components:

**H (1) Monitor** (Field Supplied)

**I (1) Data Cable with RJ-45 Connectors**
(Field Supplied)

**CABLE LENGTH:** Cable lengths should be specified to reach from Wireless Module to the network connection point.

### Separately Specified Components :

**Step 1 - Technology:**

SEPARATELY SPECIFY:

**A (1) Interface Module – Switching**
EWC_-_ _ _ _-CPS_BN_ _

**B (1) Wireless Module**
• See Price List For Current Model

**C (1) HDMI Cable**
EWCX-_ _ 01-H

**CABLE LENGTHS**: Specify cable lengths to reach from processor to the monitor.

**D (1) Power Relay Data Cable**
**EWCX-_ _01-PR**

**CABLE LENGTHS**: Specify cable lengths to reach from processor to the Power Relay Cord (near monitor).

+

**Step 2 - Monitor Support:**

SEPARATELY SPECIFY:

**E (1) workware view Enclose Wall Mount**
EWVE-S_ _ _-P_

OR

**(1) workware view Structural Wall Mount**
EWVD-S_ _ _-P_

+

**Step 3 - Table:**

SEPARATELY SPECIFY:

**F (1) Planes Conference Table – Interior Leg**
(Square, Hex or Rectangular)
TAR_-_ _ _ _

OR

**(1) Reside Table**
(Square or Rectangular)
TKR_- _ _ _ _

OR

**(1) Planes Conference Table – Perimeter Leg**
(Square or Rectangular)
TAR_-_ _ _ _

Note Wall mount applications may not require a table.

+

**Step 4 -Cable Management:**

SEPARATELY SPECIFY:

**G (1) Cable Base**
TA01-_ _14-_

Note **Wall mount applications locate the Power Relay Cord near the monitor and away from the Processor. These applications require the 6' Power Relay Data Cable (included with the Switching Interface Module) be replaced with a longer separately specified Power Relay Data Cable (EWCX-_ _01-PR). The cable must be specified with sufficient length to reach from the Processor to the location of the Power Relay Cord (near monitor).**

# Product Applications – Wireless Sharing with Cable Backup

## Wireless Sharing with Cable Backup – Dual Monitor Application

| | |
|---|---|
| **Sharing Methods:**<br>How users share their presentation on the Monitor. | **Wireless Sharing With Touch Control**<br>• Using the Touch Control, users may switch the system to wireless mode and use workware's Wireless Presentation Software to access the building's wireless wi-fi network which provides them audio/video access to the monitor to share presentations.<br>**Cabled Sharing With Touch Control**<br>• Presenters may access the monitor to share a presentation by connecting audio/video cables to their device and activating the cables corresponding button on the Touch Control. |
| **Switching Method:**<br>How users switch the monitor presentation to other users. | **Touch Control Switching**<br>• Users may switch the monitor presentation to other users by activating the corresponding button on the Touch Control.<br>**Wireless Switching**<br>• When the Wireless Mode is active, users may switch between wireless presenters using controls on workware's wireless presentation software. |
| **Maximum Number of Connections to the Monitor:** | **Cabled Connections**<br>• The Switching Interface Module can accommodate a maximum of (4) audio/video cables from each processor.<br>**Wireless Connections**<br>• A maximum of up to 250 wireless users may log into each wireless session (depending on the capacity of the building's wireless network). |
| **Monitor Power Control:** | **Touch Control**<br>• Monitor power is controlled using the power button on the Touch Control. |
| **Quad View Feature:**<br>Displays four users on one screen. | **Quad View is available for wireless users only.** |
| **Advantages:** | • Mobility for wireless users.<br>• Plug and play access for cabled users - no software needed.<br>• Touch Pad allows easy switching between cabled presenters and presentation modes.<br>• Touch Pad/Processor supports Video Conferencing Mode. |

## Separately Specified Components:

### Step 1 - Technology:

SEPARATELY SPECIFY:

**A (1) Interface Module – Switching**
EWC_-_ _ _ _-CPS_BN_ _

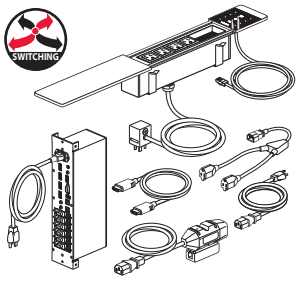


User Audio/Video Cable Options:

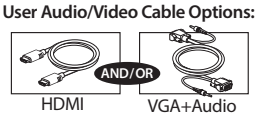


**B (1) Wireless Module**
• See Price List For Current Model

**C (2) HDMI Cable**
EWCX-_ _ 01-H

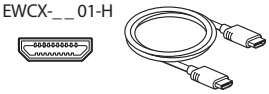

**CABLE LENGTHS**: Specify cable lengths to reach from processor to the video connection on the back of the monitor.

### Step 2 - Monitor Support:

SEPARATELY SPECIFY:

**D (1) workware view Table Mount – Dual Monitor**
EWVT-DC_D-P

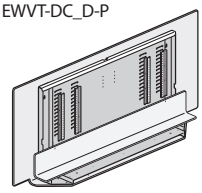

OR

**(1) workware view – Enclose Wall Mount – Dual Monitors**
EWVE-D_SS-PP

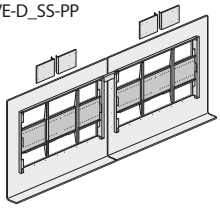

OR

**(1) workware view – Structural Wall Mount – Dual Monitors**
EWVD-D_SS-PP

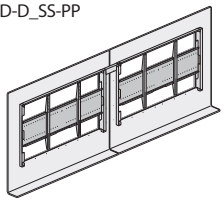

### Step 3 - Table:

SEPARATELY SPECIFY:

**E (1) Planes Conference Table – Interior Leg**
(Square, Hex or Rectangular)
TAR_-_ _ _ _

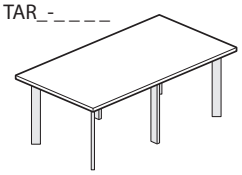

OR

**(1) Planes Conference Table – Perimeter Leg**
(Square or Rectangular)
TAR_-_ _ _ _

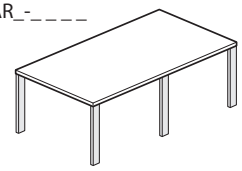

OR

**(1) Reside Table**
(Square or Rectangular)
TKR_- _ _ _ _

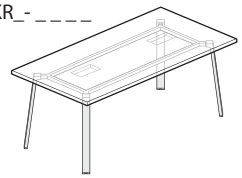

### Step 4 -Cable Management:

SEPARATELY SPECIFY:

**F (1) Cable Base**
TA01-_ _14-_

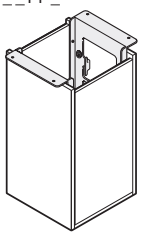

**G (1) Wire Manager– Horizontal**
(not required with wall mount applications)
EUAW

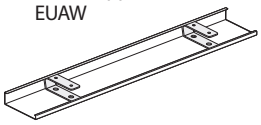

## Field Supplied Components:

**H (2) Monitors**
(Field Supplied)

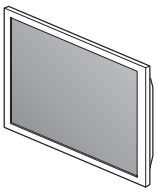

**I (1) Data Cable with RJ-45 Connectors**
(Required – Field Supplied)

**CABLE LENGTH**: cable length should be specified to reach from the Wireless Module to the network connection point.

# Product Applications – Wireless Sharing with Cable Backup

## Wireless Sharing with Cable Backup – Dual Monitor Application – Cabling Diagram

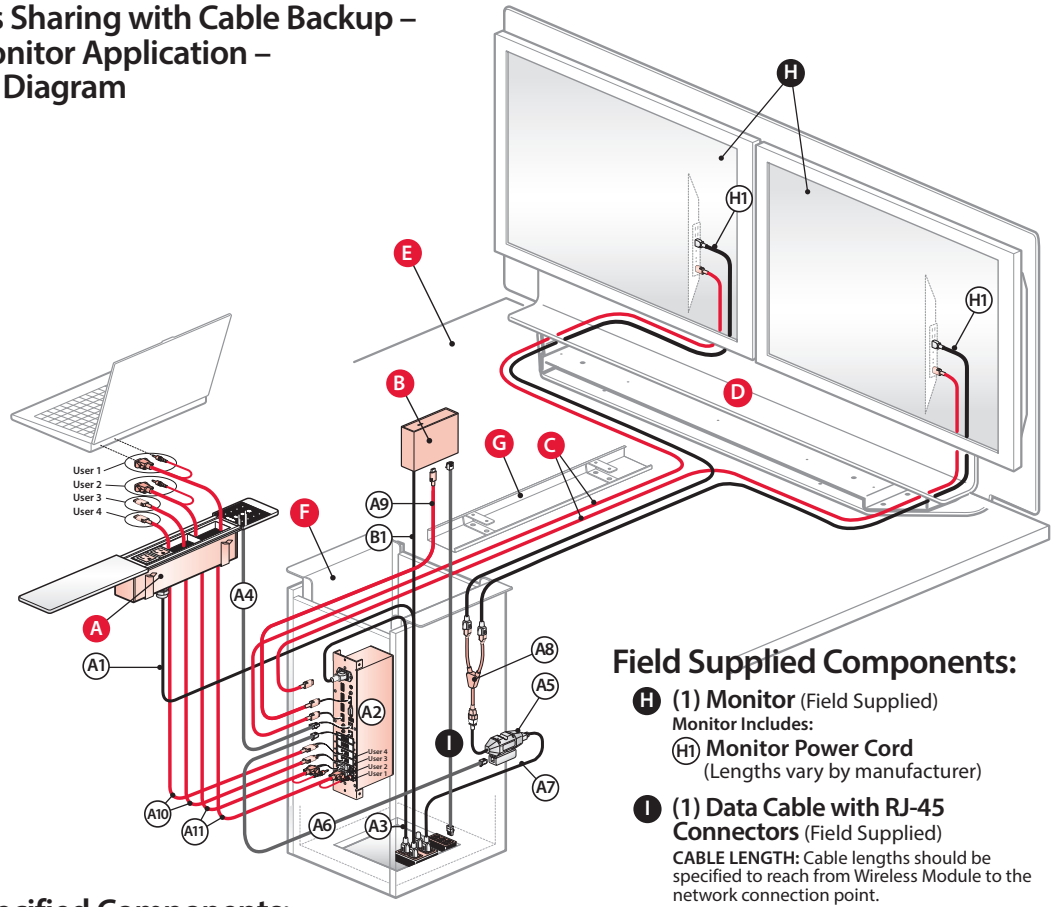


## Field Supplied Components:

**H (1) Monitor** (Field Supplied)
**Monitor Includes:**
**H1 Monitor Power Cord** (Lengths vary by manufacturer)

**I (1) Data Cable with RJ-45 Connectors** (Field Supplied)
**CABLE LENGTH:** Cable lengths should be specified to reach from Wireless Module to the network connection point.

## Separately Specified Components:

### Step 1 - Technology:

SEPARATELY SPECIFY:

**A (1) Interface Module – Switching**
EWC_-_ _ _ _-CPS_BN_ _
**Switching Interface Module Includes:**
- **A1 (1) Interface Module Power Cord** (Corded 12' long or Hardwired 6' long)
- **A2 (1) Processor**
- **A3 (1) Processor Power Cord** (6' long)
- **A4 (1) Touch Control Data Cable** (6' long)
- **A5 (1) Power Relay Cord** (5' long)
- **A6 (1) Power Relay Data Cable** (6' long)
- **A7 (1) Power Relay Adapter Cord A** (6' long)
- **A8 (1) Power Relay Adapter Cord B** (1' long)
- **A9 (1) HDMI Cable** (6 ' long)

**User A/V Cable Options**
Choice of up to four HDMI and/or VGA+Audio cables.
- **A10 (2) HDMI Cable** (10' long)
- **A11 (2) VGA+Audio Cable** (3' long)

**B (1) Wireless Module**
• See Price List For Current Model
- **B1 Wireless Module Power Cord** (5' long)

**C (2) HDMI Cable** EWCX-_ _01-H
**CABLE LENGTHS**: Specify cable lengths to reach from processor to the monitor.

### Step 2 - Monitor Support:

SEPARATELY SPECIFY:

**D (1) workware view Table Mount – Dual Monitor**
EWVT-DC_D-P

OR

**(1) workware view – Enclose Wall Mount – Dual Monitors**
EWVE-D_SS-PP

OR

**(1) workware view – Structural Wall Mount – Dual Monitors**
EWVD-D_SS-PP

### Step 3 - Table:

SEPARATELY SPECIFY:

**E (1) Planes Conference Table – Interior Leg**
(Square, Hex or Rectangular)
TAR_-_ _ _ _

OR

**(1) Reside Table**
(Square or Rectangular)
TKR_- _ _ _ _

OR

**(1) Planes Conference Table – Perimeter Leg**
(Square or Rectangular)
TAR_-_ _ _ _

### Step 4 -Cable Management:

SEPARATELY SPECIFY:

**F (1)Cable Base**
TA01-_ _14-_

**G (1) Wire Manager– Horizontal**
(not required with wall mount applications)
EUAW

**CAUTION**
- Active HDMI or Directional HDMI cables will cause damage to workware components and should not be used.
- Do not use Power Relay with projectors, to allow proper cool down cycle for projector lamp.

**Note** **Wall mount applications locate the Power Relay Cord near the monitor and away from the Processor. These applications require replacing the 6' Power Relay Data Cable (included with the Switching Interface Module) with a longer separately specified Power Relay Data Cable (EWCX-_ _01-PR). The cable must be specified with sufficient length to reach from the Processor to the location of the Power Relay Cord (near the monitor).**

# Product Applications – Wireless Sharing with Cable Backup

## Wireless Sharing with Cable Backup – Dual Monitor – Table Mount Application

• See the Cabling Diagram on the previous pages for a more detailed list of components.

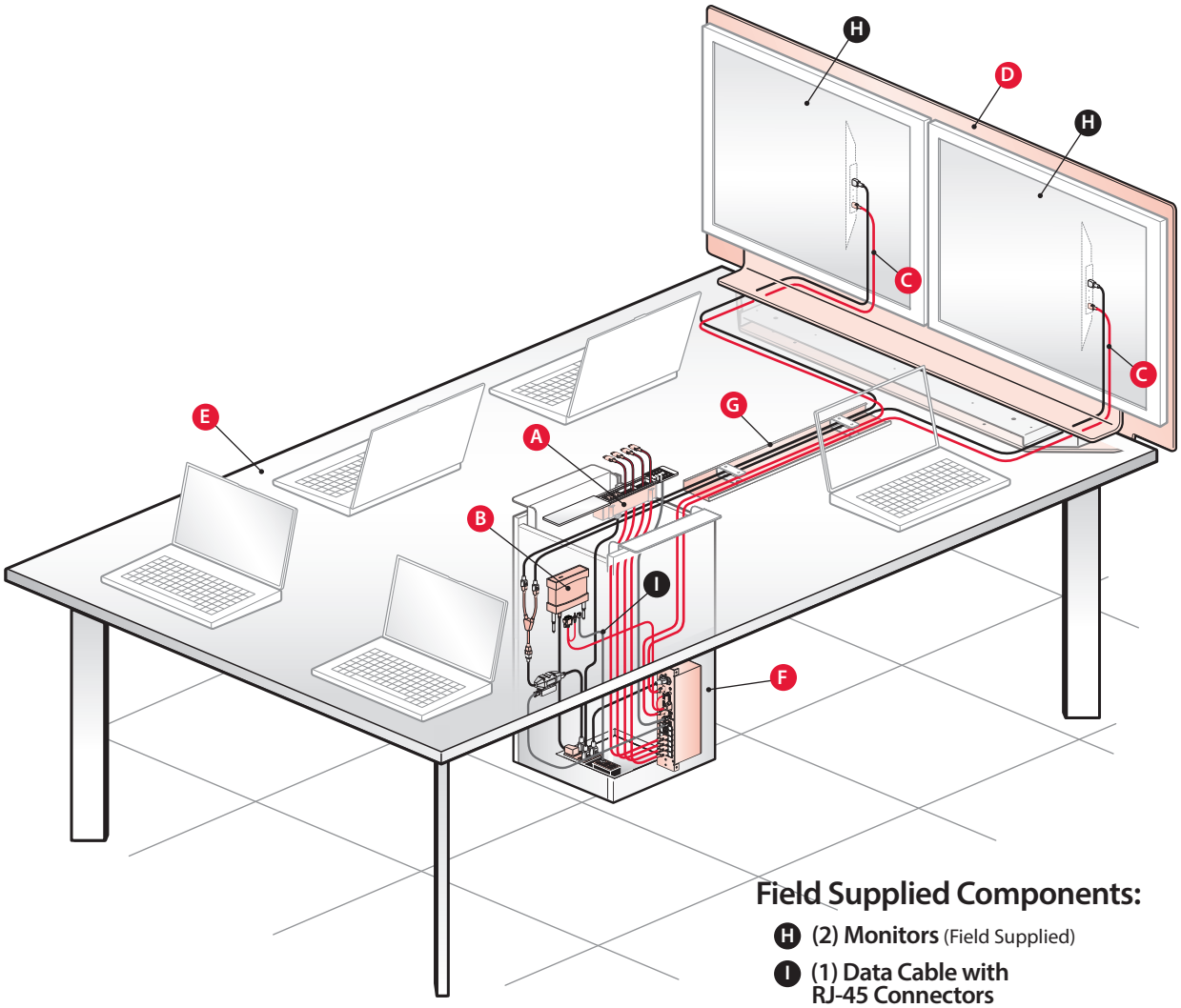


### Field Supplied Components:

**H (2) Monitors** (Field Supplied)

**I (1) Data Cable with RJ-45 Connectors**
(Field Supplied)
**CABLE LENGTH:** Cable lengths should be specified to reach from Wireless Module to the network connection point.

Note For a more detailed list of the cables, and cords included with each component see the cabling diagram for this application on the previous pages.

## Separately Specified Components :

### Step 1 - Technology:

SEPARATELY SPECIFY:

**A (1) Interface Module – Switching**
EWC_-_ _ _ _-CPS_BN_ _

**B (1) Wireless Module**
• See Price List For Current Model

**C (2) HDMI Cable**
EWCX-_ _ 01-H
**CABLE LENGTHS**: Specify cable lengths to reach from processor to the monitor.

+

### Step 2 - Monitor Support:

SEPARATELY SPECIFY:

**D (1) workware view – Table Mount – Dual Monitor**
EWVT-DC_D-P

+

### Step 3 - Table:

SEPARATELY SPECIFY:

**E (1) Planes Conference Table – Interior Leg**
(Square, Hex or Rectangular)
TAR_-_ _ _ _

OR

**(1) Reside Table**
(Square or Rectangular)
TKR_- _ _ _ _

OR

**(1) Planes Conference Table – Perimeter Leg**
(Square or Rectangular)
TAR_-_ _ _ _

+

### Step 4 -Cable Management:

SEPARATELY SPECIFY:

**F (1)Cable Base**
TA01-_ _14-_

**G (1) Wire Manager– Horizontal**
EUAW

Note **Table mount applications specified with longer tables may require the Power Relay Cord be located farther than 6' away from the Processor. These applications require replacing the standard 6' Power Relay Data Cable (included with the Switching Interface Module) with a longer separately specified Power Relay Data Cable (EWCX-_ _01-PR). The cable must be specified with sufficient length to reach from the Processor to the location of the Power Relay Cord (usually near the monitor).**

## Wireless Sharing with Cable Backup – Dual Monitor – Wall Mount Application

• See the Cabling Diagram on the previous pages for a more detailed list of components.

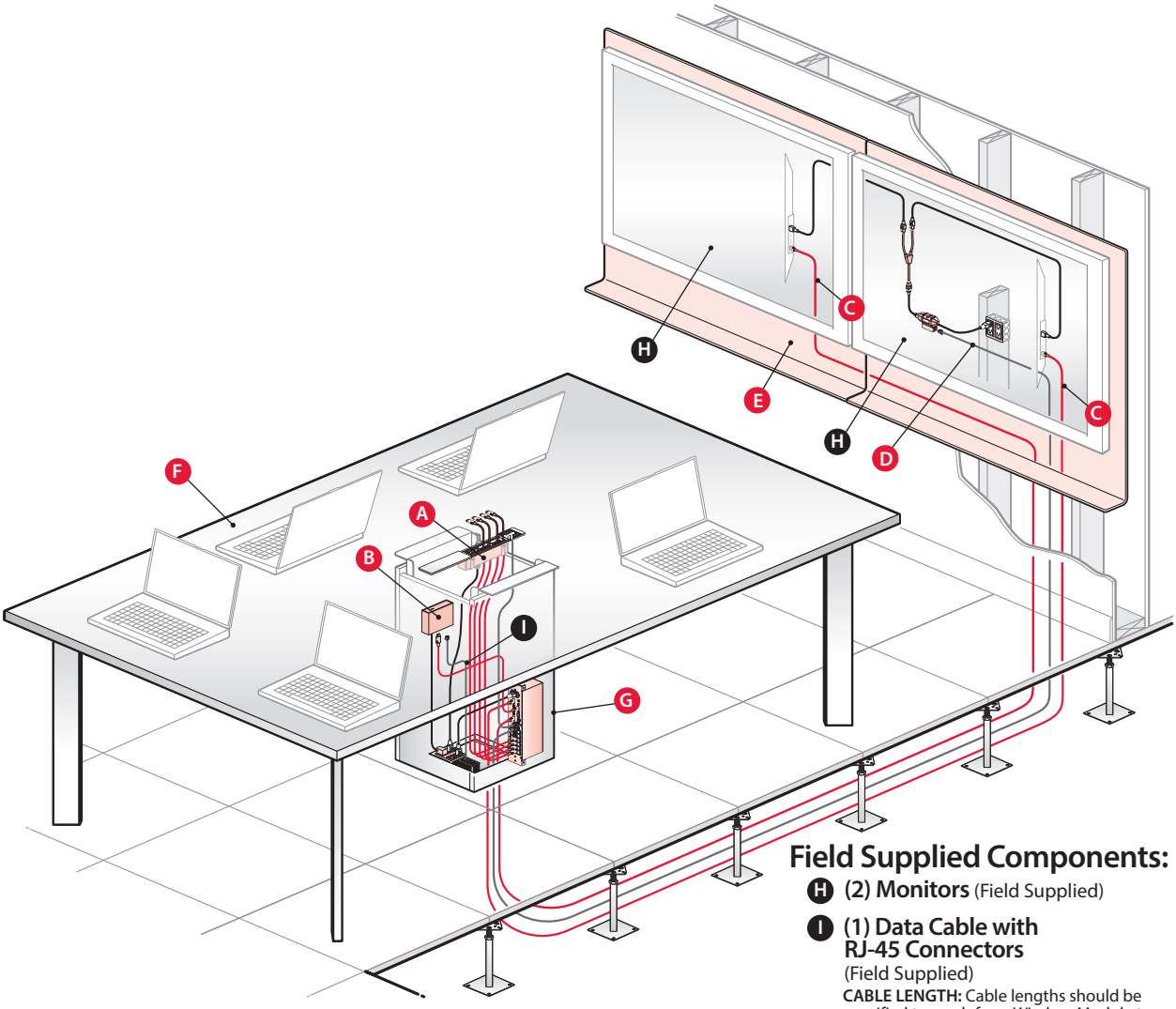


### Field Supplied Components:

**H** **(2) Monitors** (Field Supplied)

**I** **(1) Data Cable with RJ-45 Connectors** (Field Supplied)

**CABLE LENGTH:** Cable lengths should be specified to reach from Wireless Module to the network connection point.

## Separately Specified Components :

### Step 1 - Technology:

SEPARATELY SPECIFY:

**A** **(1) Interface Module – Switching**
EWC_-_ _ _ _-CPS_BN_ _

**B** **(1) Wireless Module**
• See Price List For Current Model

**C** **(2) HDMI Cable**
EWCX-_ _ 01-H
**CABLE LENGTH:** Cable lengths should be specified to reach from processor to the monitor.

**D** **(1) Power Relay Data Cable**
**EWCX-_ _01-PR** (See Note below)
**CABLE LENGTHS**: Specify cable lengths to reach from the processor to the Power Relay Cord (near the monitor).

+

### Step 2 - Monitor Support:

SEPARATELY SPECIFY:

**E** **(1) workware view – Enclose Wall Mount – Dual Monitors**
EWVE-D_SS-PP

OR

**(1) workware view – Structural Wall Mount – Dual Monitors**
EWVD-D_SS-PP

+

### Step 3 - Table:

SEPARATELY SPECIFY:

**F** **(1) Planes Conference Table – Interior Leg**
(Square, Hex or Rectangular)
TAR_-_ _ _ _

OR

**(1) Reside Table**
(Square or Rectangular)
TKR_- _ _ _ _

OR

**(1) Planes Conference Table – Perimeter Leg**
(Square or Rectangular)
TAR_-_ _ _ _

Note Wall mount applications may not require a table.

+

### Step 4 -Cable Management:

SEPARATELY SPECIFY:

**G** **(1) Cable Base**
TA01-_ _14-_

Note **Wall mount applications locate the Power Relay Cord near the monitor and away from the Processor. These applications require replacing the 6' Power Relay Data Cable (included with the Switching Interface Module) with a longer separately specified Power Relay Data Cable (EWCX-_ _01-PR). The cable must be specified with sufficient length to reach from the Processor to the location of the Power Relay Cord (near the monitor).**

**This page intentionally left blank.**

# Product Overview
# workware Mobile Monitor Easel

# Product Overview – Mobile Monitor Easel

## Using the Mobile Monitor Easels in Technology Enabled Spaces

- The Mobile Monitor Easel provides monitor support and mobility encouraging the use of emerging technologies for a variety of activities including collaboration, audio/video conferencing, content creation, planning and data sharing.

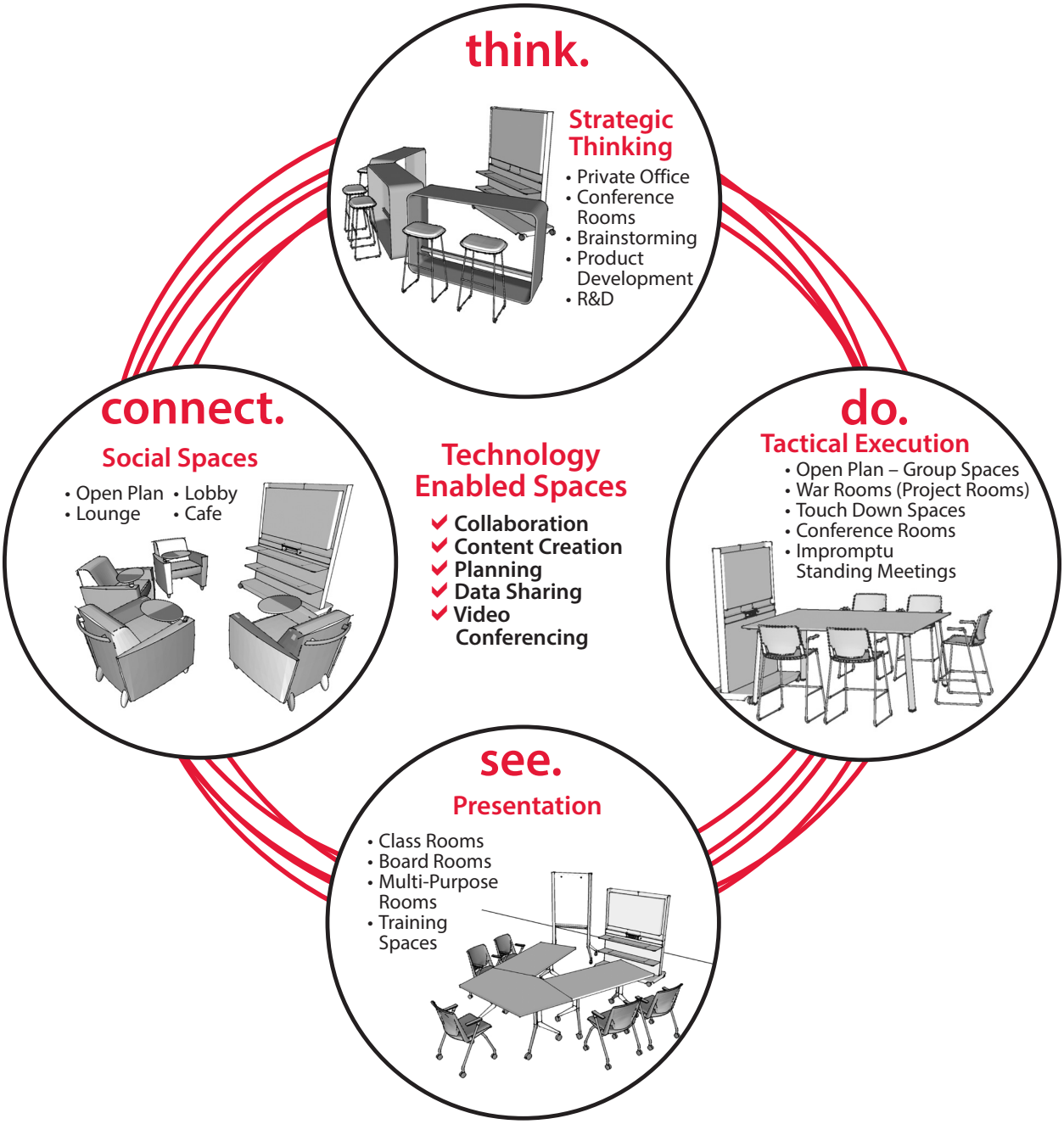

# Product Overview – Mobile Monitor Easel

## Mobile Monitor Easel – Separately Specified Components

**The complete Mobile Monitor Easel is made of three separately specified components:**

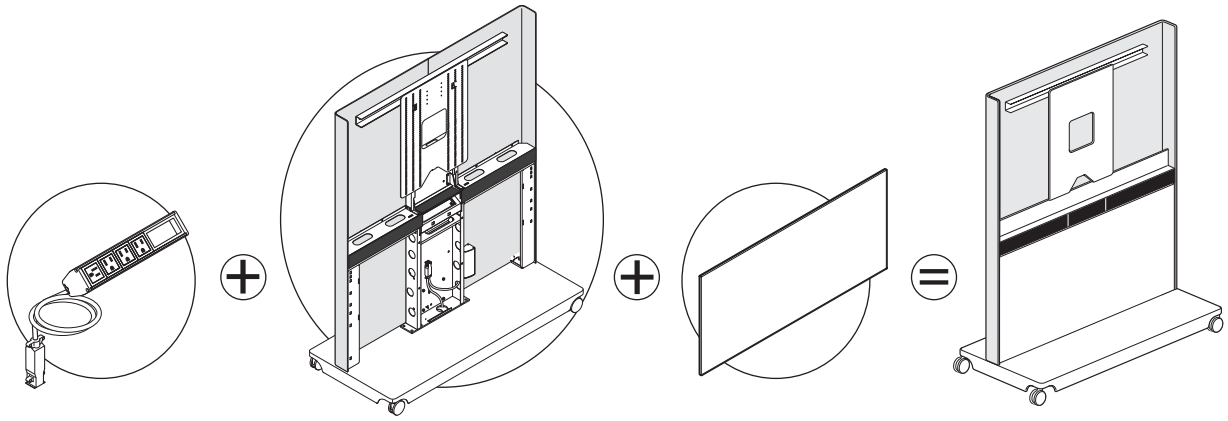

### ① Technology

**workware connect technology components may be specified to provide:**

- Power/Data access for user devices.
- Cabled or Wireless Audio/Video access to the monitor to share user presentations.
- Power control for the monitor and workware components.

**workware connect technology components (for use with easels):**

- Interface Module (for easels)
- Wireless Module
- Various A/V Cables

### ② Easel

**workware view Mobile Monitor Easels may be specified to provide:**

- Support, mobility and internal power for monitors (field supplied).
- Support and management of separately specified workware connect technology components

**Easel Configurations:**

Easels are available in (2) configurations to accommodate different workware connect technology components:

- No Interface Module
- For Non-Switching Interface Module

**Easel Sizes:**

Easels are available in (3) sizes to accommodate different working heights and monitor sizes.

- Seated Height for 52”/55” Monitors
- Seated Height for 65” Monitors
- Standing Height for 52”/55” Monitors

### ③ Tile

**workware view Tiles or Shelf Tiles provide:**

- Concealment of internal power, data and audio/video components inside the easel.
- Enhances the aesthetics of the unit with the availability of multiple materials and finishes.
- Optional shelf space for holding material (Shelf Tile only).

**Tile/Shelf Tile – Materials and Finishes**

- Tiles are available in painted steel, laminate, wood or fabric.
- Shelf Tile are available only in painted steel.

**Easel Configurations:**

Tiles/Shelf Tiles are avail accommodate the different workware connect technology components:

- No Interface Module
- For Switching or Non-Switching Interface Module

### Complete Mobile Monitor Easel Application

Note • Specific components will vary depending on which application is specified.

# Product Overview – Mobile Monitor Easel

## workware connect Technology Applications for Mobile Monitor Easels

- Mobile Monitor Easels can be configured into multiple applications to best meets the requirements of all users.
- The technology application will drive which workware connect components, easel type and tile type are required.

### wireless sharing

| Application Features: | Wireless Sharing |
|---|---|
| Method for Sharing Presentations: | Wireless Wi-Fi Connection (only) |
| Method for Switching Between Presenters: | Wireless Presentation Software |
| Method for Controlling Monitor Power: | Monitor Remote Control |
| Number of User/Content Presentations: | **Pro** – Unlimited* Simultaneous presentations<br>**Base** – 10* simultaneous users presentations.<br>– 4* simultaneous content presentations. |
| Interface Module: | Optional (Non-Switching) |

**The amount of simultaneous users/content is limited to the bandwidth capabilities of the network.*

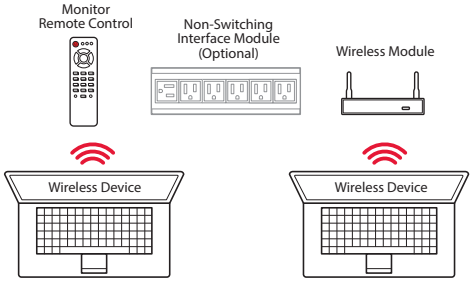


### cable sharing with touch control

| Application Features: | Cable Sharing with Touch Control |
|---|---|
| Method for Sharing Presentations: | Cabled Connections |
| Method for Switching Between Presenters: | Touch Control |
| Method for Controlling Monitor Power: | Touch Control |
| Number of User Connections to Monitor: | Cabled – 2 user connections |
| Interface Module: | Required (Switching) |

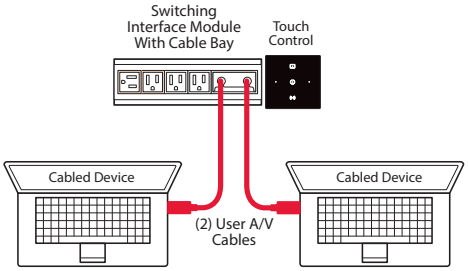


### cable sharing

| Application Features: | Cable Sharing |
|---|---|
| Method for Sharing Presentations: | Cabled Connection |
| Method for Switching Between Presenters: | Cable being handed to other presenter |
| Method for Controlling Monitor Power: | Monitor Remote Control |
| Number of User Connections to Monitor: | Cabled – 1 user connections |
| Interface Module: | Required (Switching) |

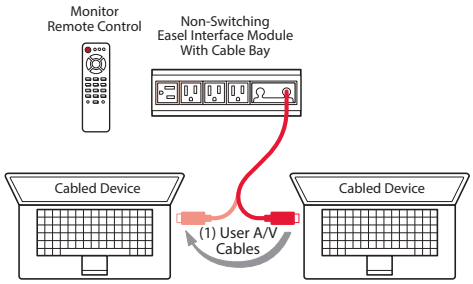


### Digital Signage

| Application Features: | Digital Signage |
|---|---|
| Method for Sharing Presentations: | Cabled Connection |
| Method for Switching Between Presenters: | Dedicated presentation – does not switch. |
| Method for Controlling Monitor Power: | Monitor Remote Control |
| Number of User Connections to Monitor: | Cabled – 1 user connections |
| Interface Module: | Optional (Non-Switching) |

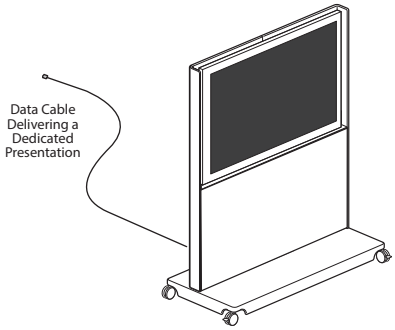

# Product Overview – Mobile Monitor Easel

## Non-Switching and No Interface Module Components

Most workware components are available as either Switching, Non-Switching or with No Interface Module variations. These components should not be mixed (Example: The Switching version of the Interface Module requires the Switching version Mobile Monitor Easel which requires the switching version Tile/Shelf Tile).

### No Interface Module Components

- Does not Includes an Interface Module for user power and cable access.
- Does not include a Touch Control to switch between users or presentation modes.
- No Interface Module components (Interface Module/Easel/Tile) should only be combined with other No Interface Module components.

**No Interface Module**

#### ① Technology

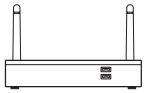

Wireless Module –
• See Price List For Current Model

#### ② Easel

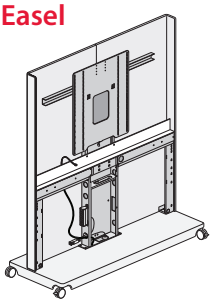

Mobile Monitor Easel –
No Interface Module
EWVM-S _ _ P-N

#### ③ Tile

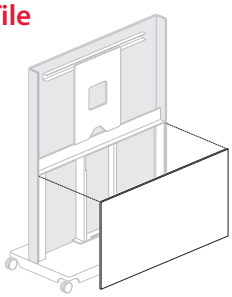

Tile for Mobile Monitor Easel –
No Interface Module
EWVX-P_ _ _ NN

No Interface Module Features:

| | |
|---|---|
| Interface Module | No |
| Touch Control | No |
| Cabled Monitor Access | No |
| Wireless Monitor Access | ✔ Yes |

### Non-Switching Interface Module Components

- Includes an Interface Module to provide power and cable access for users.
- Does not include a Touch Control and components to switch between users or presentation modes.
- Non-switching components (Interface Module/Easel/Tile) should only be combined with other Non-Switching components.

**Interface Module**

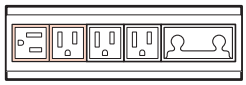

#### ① Technology

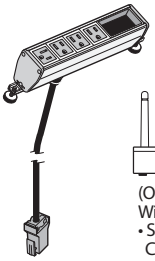

(Optional)
Wireless Module –
• See Price List For Current Model

Interface Module –
Non- Switching 6-Port
EWCE - _ _ _ _- NNNNBNPW

#### ② Easel

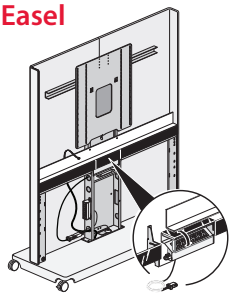

Mobile Monitor Easel –
For Non-Switching Interface Module
EWVM-S _ _ P-P

#### ③ Tile

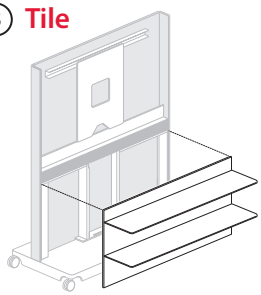

Shelf Tile for Mobile Monitor Easel –
Switching or Non-Switching
Interface Module
EWVX-S_ _ - P_

Non-Switching Interface Module Features:

| | |
|---|---|
| Interface Module | ✔ Yes |
| Touch Control | No |
| Cabled Monitor Access | ✔ Yes (1 Cable) |
| Wireless Monitor Access | ✔ Yes (Optional) |

# Product Overview – Mobile Monitor Easel

## Steps for Specifying a Mobile Monitor Easel

Listed below are each of the three steps required to specify a complete Mobile Monitor Easel. Below each step are all of the separately specified components available to make a complete Mobile Monitor Easel Application.

### Step 1 – Specify Technology

**Specify all needed workware connect Components and accessories.**

**Available workware connect components for the Mobile Monitor Easel:**

- ☐ **Wireless Module**
  - See Price List for current model
- ☐ **Interface Module – Non-Switching – 6-Port**
  EWCE-_ _ _ _ - NNNNBNPW
- ☐ **HDMI Cable**
  EWCX-_ _01-H
- ☐ **VGA + Audio Cable**
  EWCX-_ _01-V

### Step 2 – Specify Easel

**Specify the workware view Mobile Monitor Easel.**

**Available models of Mobile Monitor Easels:**

- ☐ **Mobile Monitor Easel – No Interface Module**
  52"/55" Monitor – Seated Height EWVM-SB4P-N
  65" Monitor – Seated Height EWVM-SC4P-N
  52"/55" Monitor – Standing Height EWVM-SB7P-N
- ☐ **Mobile Monitor Easel – For Non-Switching Interface Module**
  52"/55" Monitor – Seated Height EWVM-SB4P-P
  65" Monitor – Seated Height EWVM-SC4P-P
  52"/55" Monitor – Standing Height EWVM-SB7P-P

### Step 3 – Specify Tile

**Specify the workware view Tile or Shelf Tile – for Mobile Monitor Easel**

**Available models of Tiles for the Mobile Monitor Easel:**

- ☐ **Tile for Mobile Monitor Easel – No Interface Module** (wood, laminate, fabric or painted steel finishes)
  52" / 55" Monitor - Seated Height EWVX-PB4 _-NN
  65" Monitor - Seated Height EWVX-PC4_-NN
  52"/55" Monitor - Standing Height EWVX-PB7_-NN
- ☐ **Tile for Mobile Monitor Easel – For Switching or Non-Switching Interface Module** (wood, laminate, fabric or painted steel finishes)
  52" / 55" Monitor - Seated Height EWVX-PB4 _-PN
  65" Monitor - Seated Height EWVX-PC4_-PN
  52"/55" Monitor - Standing Height EWVX-PB7_-PN

**Available models of Shelf Tiles for the Mobile Monitor Easel:**

- ☐ **Shelf Tile for Mobile Monitor Easel – No Interface Module** (painted steel finish only)
  52" / 55" Monitor - Seated Height EWVX-SB4P-N2
  65" Monitor - Seated Height EWVX-SC4P-N2
  52"/55" Monitor - Standing Height EWVX-SB7P-N1
- ☐ **Shelf Tile for Mobile Monitor Easel – For Switching or Non-Switching Interface Module** (painted steel finish only)
  52" / 55" Monitor - Seated Height EWVX-SB4P-P2
  65" Monitor - Seated Height EWVX-SC4P-P2
  52"/55" Monitor - Standing Height EWVX-SB7P-P1

**Mobile Monitor Easel Application**
(Illustration shown with Wireless Sharing with Cable Backup Application)

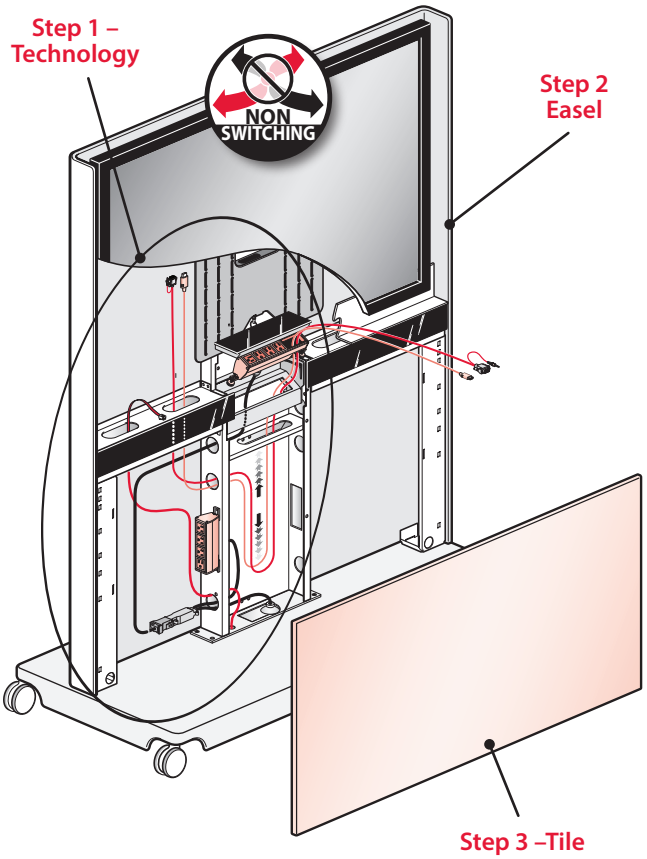


Note
- Specific components will vary depending on configuration (Illustration shown with Wireless Sharing with Cable Backup Configuration).
- Do not mix Switching, Non-Switching and No-Interface components.

### Field Supplied Components:

- **Monitor** (Required)
  – LED 1080P monitors are highly recommended
  – Monitor Remote Control will be required in some applications.
- **Network Data Cable with RJ-45 Connector** (Optional)
  – Attaches to the back of the easel base to provide access to the building network.
- **Adapter Cables** (Optional)
  – Adapter Cables may be required for input devices without HDMI or VGA+Audio connections.

# Product Details
# workware Mobile Monitor Easel

# Product Details – workware connect – for the Mobile Monitor Easel

## Included Components – Interface Module – Non-Switching

### A Interface Module

**Includes the following components:**

- (A1) **Power Receptacles** (standard in black) provide users with external power access using power receptacles (NEMA 5-15R) or USB charging receptacles.
- (A2) **Cable Bay** (optional – standard in black) provides reservoir for holding a maximum of two audio video cables.
- (A3) **Interface Module Power Cord** (2' long– standard in black) Attaches to a modular power connection on the easel.

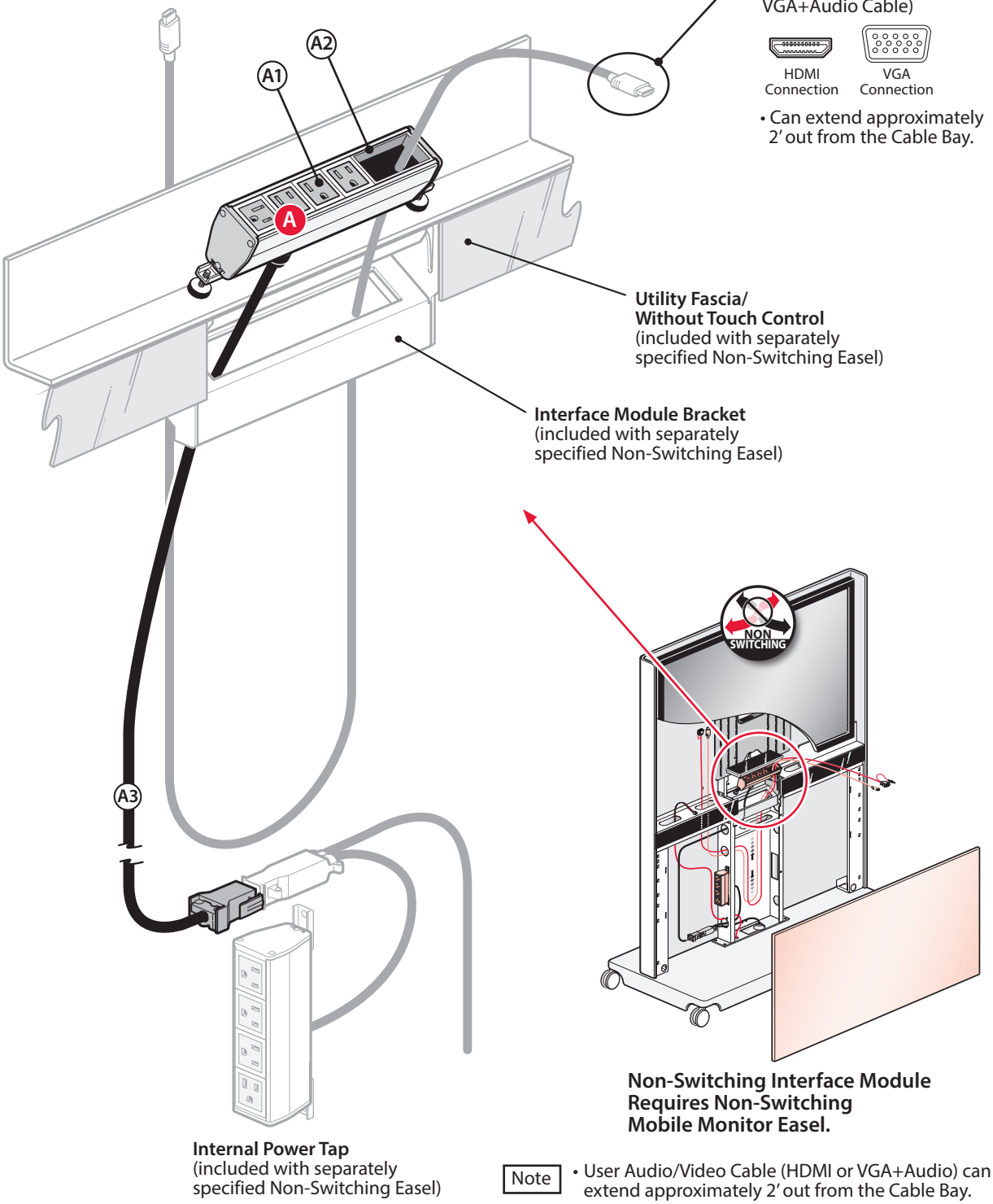


Note • User Audio/Video Cable (HDMI or VGA+Audio) can extend approximately 2' out from the Cable Bay.

## Port Options – Interface Module – Non-Switching 6 port

### 4 Power Receptacle,1 Cable Bay – EWCE-4R2B-NNNNBNPW

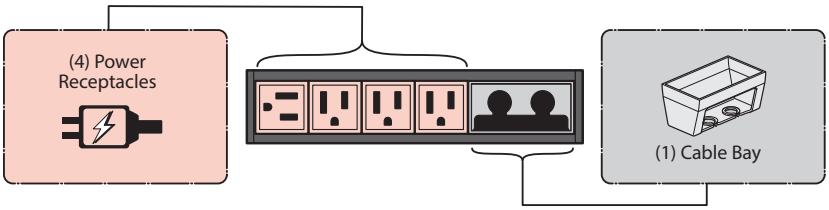


### 2 Power Receptacle, 2 USB Charging,1 Cable Bay – EWCE-4A2B-NNNNBNPW

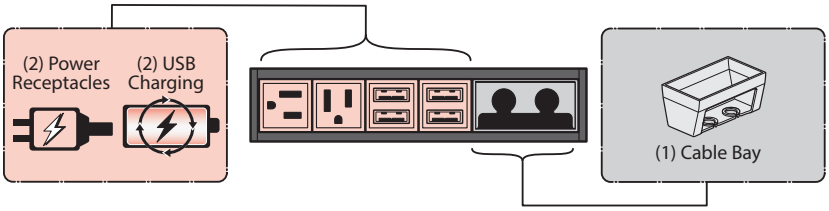


### 4 Power Receptacle, 2 Data Ports – EWCE-4R2D-NNNNBNPW

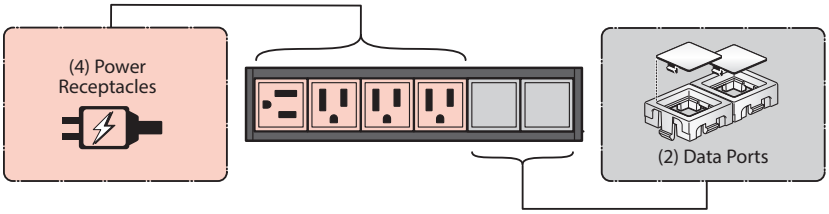


### 2 Power Receptacle, 2 USB Charging, 2 Data Ports – EWCE-4A2D-NNNNBNPW

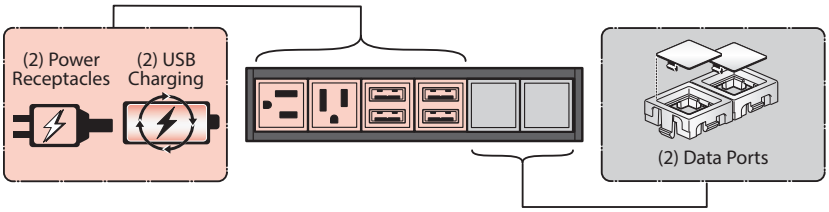


### 6 Power Receptacle – EWCE-6RNN-NNNNBNPW

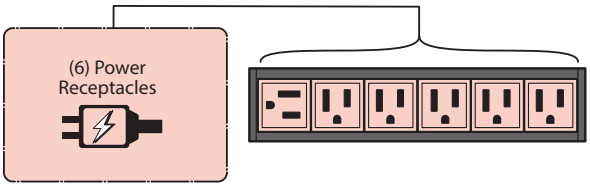


### 3 Power Receptacle, 3 USB Charging – EWCE-6ANN-NNNNBNPW

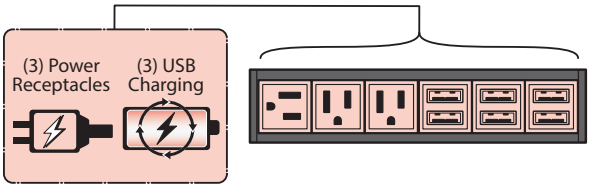


### Power – Port Options:

**Power Receptacles**

- Power Receptacle is NEMA 5-15R (black)

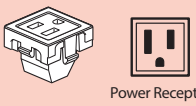


**USB Charging Receptacles**

- Includes 2 USB charging receptacles per port. (black)
- USB for charging only (2000 mA supply) – Does not transmit data.

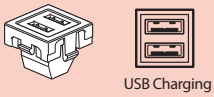


### Data/Cable –Port Options:

**Cable Bay**

- A reservoir that holds audio/video cables (black).
- A single Cable Bay accommodates a maximum of two video cables.
- Each cable bay occupies two ports in the Interface Module.

Note: The user Audio/Video Cable (HDMI or VGA+Audio) must be separately specified with Non-Switching Interface Modules.

**Data Access Port**

- Includes blank data covers and data jack adapters (black).
- Data Jack Adapters work with field supplied Jacks from Siemon, Hubbell, ADC / TE Connectivity and Panduit.
- Additional Data Tree adapters area available through eParts.

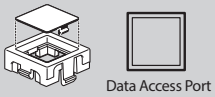


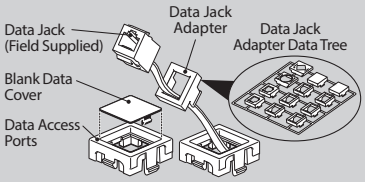

# Product Details – workware connect – for the Mobile Monitor Easel

## Port Options – Interface Module – Switching 6-Port

### (4) Power Receptacle, (1) Cable Bay, (1) HDMI, (1) VGA + Audio
EWCE-4R2C-NNNNBNPW

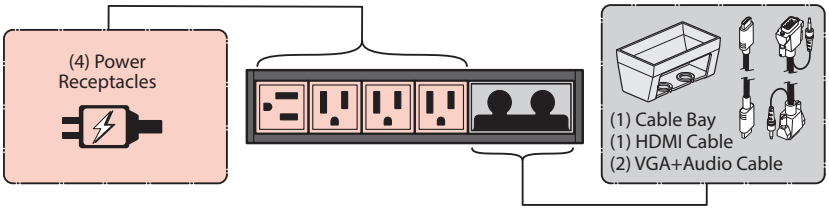


### (4) Power Receptacle, (1) Cable Bay, (2) HDMI
EWCE-4R2H-NNNNBNPW

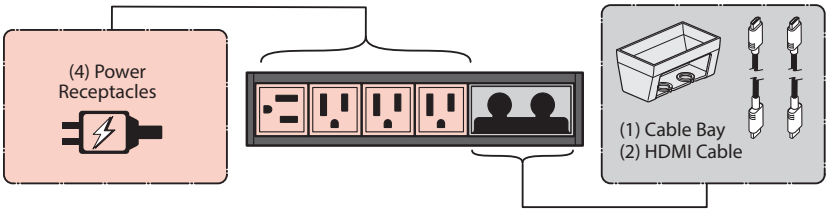


### (4) Power Receptacle, (1) Cable Bay, (2) VGA + Audio
EWCE-4R2V-NNNNBNPW

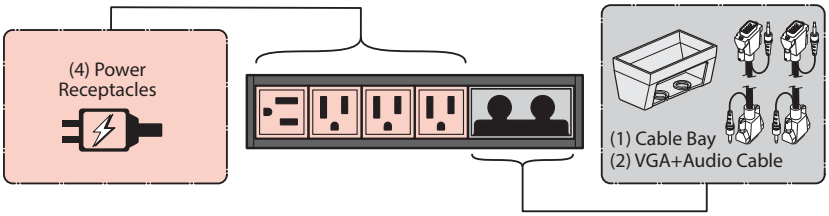


### (2) Power Receptacle, (2) USB charging, (1) Cable Bay, (1) HDMI, (1) VGA + Audio – EWCE-4A2C-NNNNBNPW

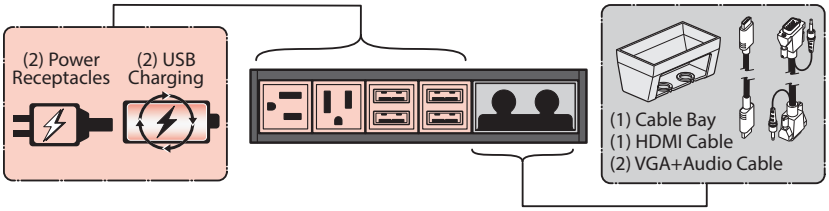


### (2) Power Receptacle, (2) USB charging, (1) Cable Bay, (2) HDMI
EWCE-4A2H-NNNNBNPW

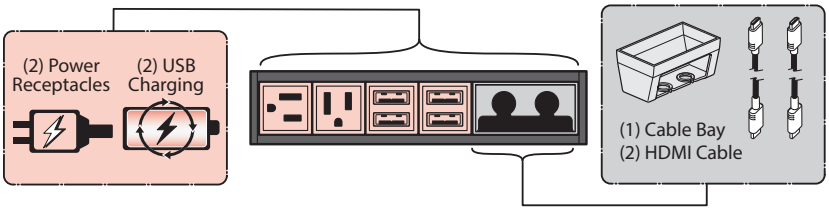


### (2) Power Receptacle, (2) USB charging, (1) Cable Bay, (2) VGA + Audio
EWCE-4A2V-NNNNBNPW

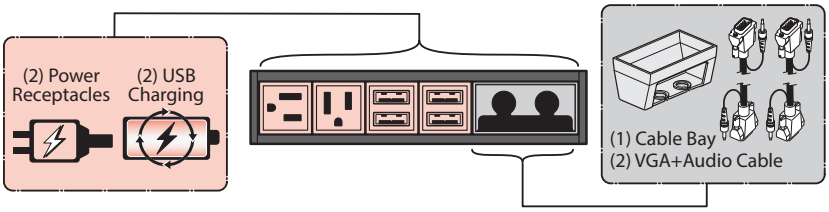


### Power Port Options:

**Power Receptacles**

- Power Receptacle is NEMA 5-15R (black)

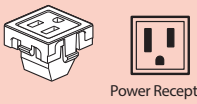


**USB Charging Receptacles**

- Includes 2 USB charging receptacles per port. (black)
- USB for charging only (2000 mA supply) – Does not transmit data.

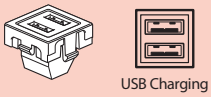


### Audio/Video Cable Port Options:

**Cable Bay**

- A reservoir that holds audio/video cables (black).
- A single Cable Bay accommodates a maximum of two video cables.
- Each cable bay occupies two ports in the Interface Module.

**HDMI Cable**

- Transmits digital video and audio content.
- HDMI Cable is 10' long (black).

**VGA Cable + Audio Cable**

- VGA cable transmits analog video content (does not include audio).
- 3.5mm Audio Cable is included with VGA Cable to transmit analog audio content.
- VGA Cable and Audio Cable are 12' long (black)

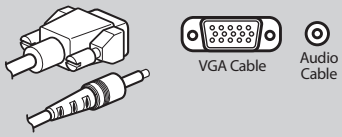

# Product Details – workware view – Mobile Monitor Easel

## Mobile Monitor Easel Types:

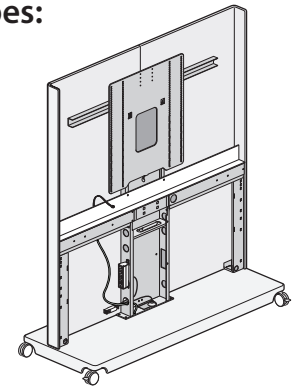

EWVM-S _ _ P-N

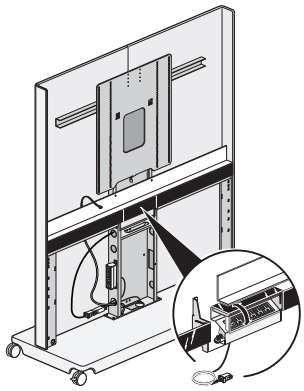

EWVM-S _ _ P-P

| | Mobile Monitor Easel No Interface Module | Mobile Monitor Easel For Non-Switching Interface Module |
|---|---|---|
| Sizes Available | 52"-55" Monitor – Seated Height<br>65" Monitor – Seated Height<br>52"-55" Monitor – Standing Height | 52"-55" Monitor – Seated Height<br>65" Monitor – Seated Height<br>52"-55" Monitor – Standing Height |
| Accommodates Interface Module | ✗ No<br>Does Not Accommodate Interface Modules | ✓ Yes<br>Requires Separately Specified Interface Module – Non-Switching |
| Includes Touch Control | ✗ No | ✗ No |
| Tile/Shelf Tile Selection (Required) | ✓<br>Requires Tile/Shelf Tile No Interface Module | ✓<br>Requires Tile / Shelf Tile for Switching or Non-Switching Interface Module |
| cable sharing | ✗ Not Supported | ✓ Supported |
| wireless sharing | ✓ Supported | ✓ Supported |
| cable sharing with touch control | ✗ Not Supported | ✗ Not Supported |
| wireless sharing with cable backup | ✗ Not Supported | ✗ Not Supported |

# Product Details – workware view – Mobile Monitor Easel

## Mobile Monitor Easel Includes the following:

- Frame and Base (available in Trim colors).
- (2) locking and (2) non-locking casters (available in choice of light platinum hub/graphite tread, fog hub/ graphite tread, or black hub/black tread).
- Monitor mounting bracket and hardware kit (standard in black)
- 14' retracting power cord with circuit breaker (standard in black)
- Internal 4-port power tap to power internal components (standard in black)
- RJ45 data port coupler and Internal 5' RJ45 patch cord (standard in black).

### Mobile Monitor Easel – No Interface Module

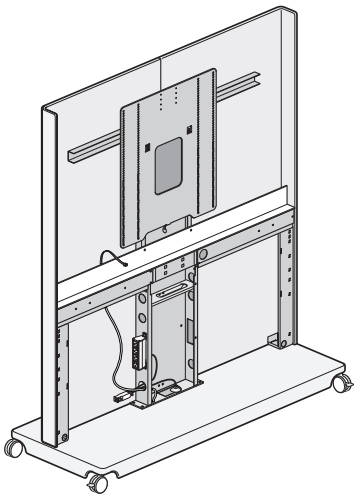

EWVM-S _ _ P-N

**For use with the following Technology Applications:**

**wireless sharing**

**Digital Signage**

- Designed for applications that do not require external power access for user devices or cabled audio/video access to the monitor for users.
- Requires a separately specified Tile or Shelf Tile for Mobile Monitor Easel (for No Interface Module) to cover the front of the unit.
- Does not include:
  - Mid-height Utility Fascia
  - Touch Control
  - Flipper door and mounting bracket for Interface module.
- Does not accommodate Interface Modules.

### Mobile Monitor Easel – For Non-Switching Interface Module

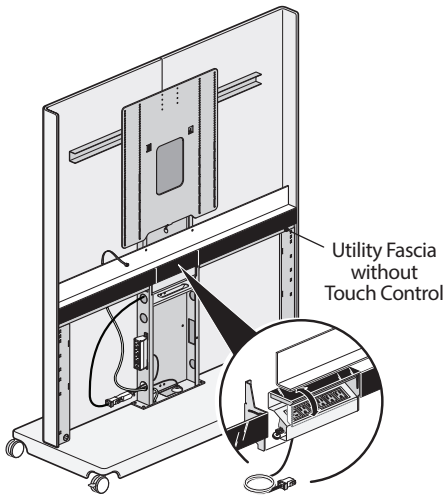


EWVM-S _ _ P-P

**For use with the following Technology Applications:**

**wireless sharing**

**cable sharing**

**Includes:**

- Mid-height Utility Fascia without touch control.
- Flipper door and mounting bracket for separately specified Interface Module.

---

- Requires a separately specified Interface Module (non-switching) to provide power access for users and optional cabled audio/video access to the monitor.
- Requires a separately specified Tile or Shelf Tile for Mobile Monitor Easel (for switching or non-switching interface module) to cover the front of the unit.

**Caster Options**

- Mobile Monitor Easel includes 2 locking casters and two non-locking casters. Casters are available in three color combinations: light platinum hub with graphite tread, fog hub with graphite tread or black

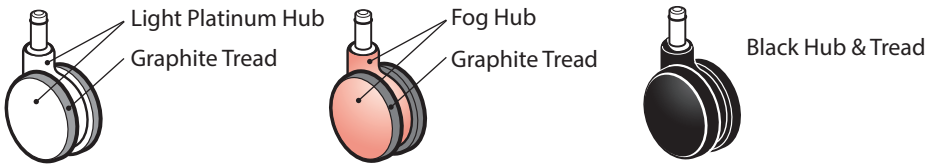

## Mobile Monitor Easels – Dimensions

### 52″-55″ Monitor – Seated Height (Shown with Separately Specified Shelf Tile)

Easel Front View – No Interface Module

Easel Front View – For Non-Switching or Switching Interface Module

Side View

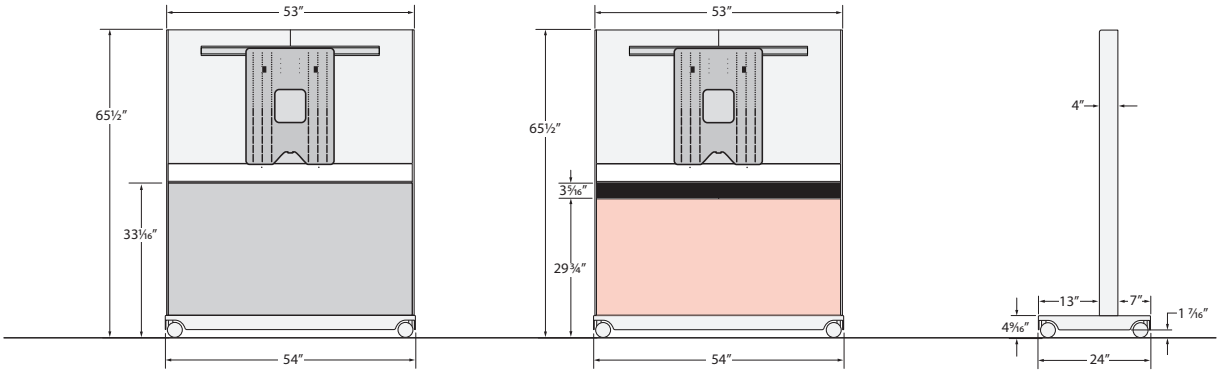


### 65″ Monitor – Seated Height (Shown with Separately Specified Shelf Tile)

Easel Front View – No Interface Module

Easel Front View – For Non-Switching or Switching Interface Module

Side View

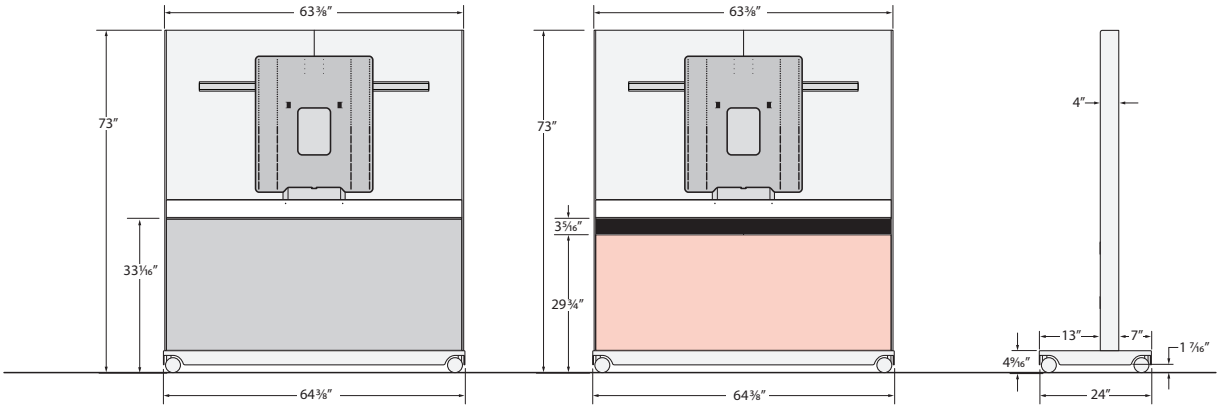


### 52″-55″ Monitor – Standing Height (Shown with Separately Specified Shelf Tile)

Easel Front View – No Interface Module

Easel Front View – For Non-Switching or Switching Interface Module

Side View

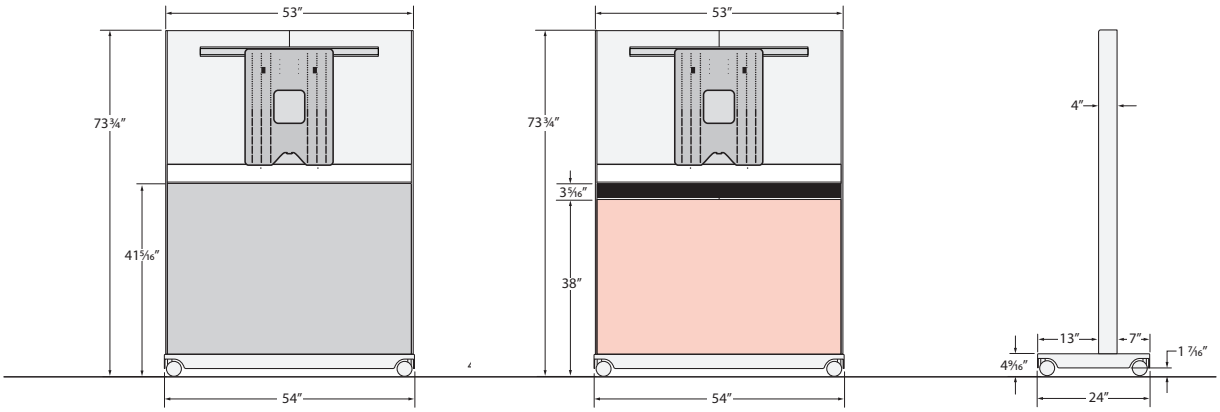


Note • Switching and Non-Switching Mobile Monitor Easels both have the same dimensions. Switching Mobile Monitor Easels includes a Touch Control and Non-Switching do not have a Touch Control.

# Product Details – workware view – Mobile Monitor Easel

## Mobile Monitor Easels – Seated / Standing Heights

### 52″-55″ Monitor – Seated Height – Mobile Monitor Easel

- Places monitor at optimal height for viewing the monitor in a seated position.
- Places monitor and optional Utility Fascia just above standard 29″ table top height.
- Accommodates 52″-55″ Monitors (field supplied).

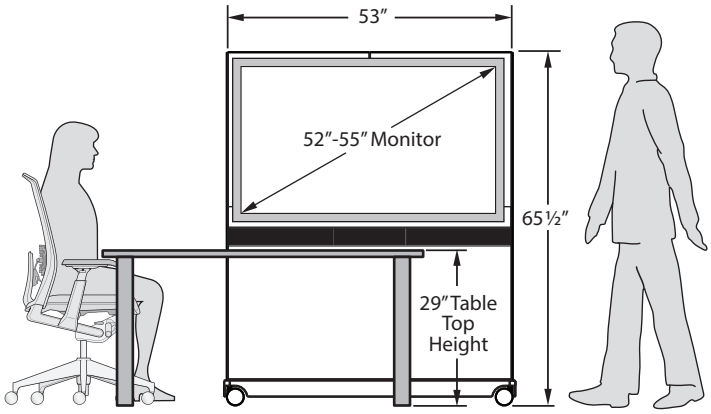


### 65″ Monitor – Seated Height – Mobile Monitor Easel

- Places monitor at optimal height for viewing the monitor in a seated or standing position.
- Places monitor and optional Utility Fascia just above standard 29″ table top height.
- Accommodates 65″ Monitors (field supplied).

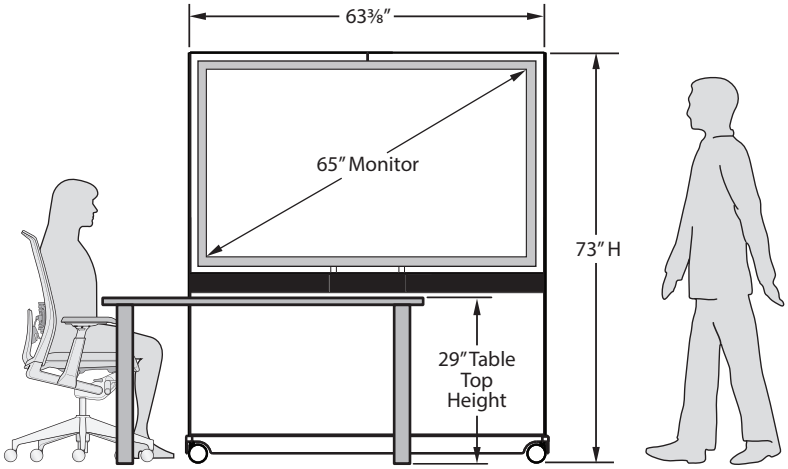


### 52″-55″ Monitor – Standing Height – Mobile Monitor Easel

- Places monitor at optimal height for viewing the monitor in a standing position.
- Places monitor and optional Utility Fascia just above a 38″ high table top.
- Accommodates 52″-55″ Monitors (field supplied).

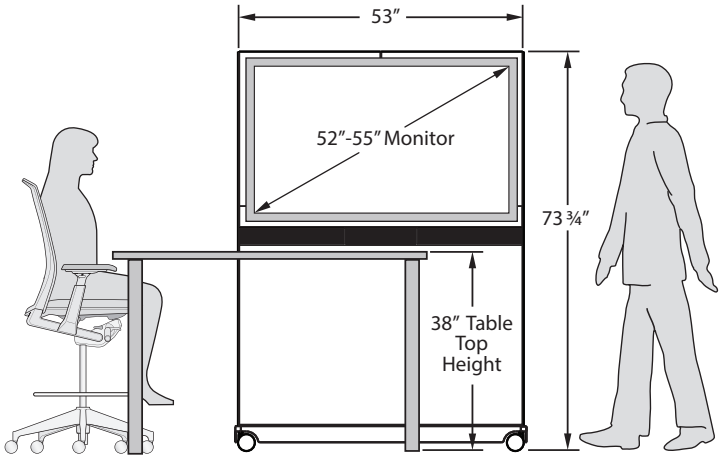

# Product Details – workware view – Mobile Monitor Easel

## Monitor Considerations

(Applies to all easel types: No Interface, Non-Switching Interface Module And Switching Interface Module)

- 1080P LED Monitor is recommended (See below for monitor size requirements).
- workware requires monitor with (1) HDMI connection.
- Applications with Non-Switching Interface Module or No Interface Module Easels will control monitor power from the monitor or with a remote control.
- The Monitor can be adjusted vertically on the Monitor Mounting Bracket in 1/2″ increments.

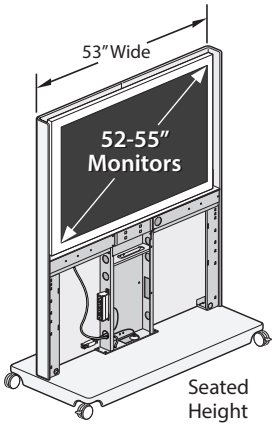


### Mobile Monitor Easel for 52″-55″ Monitor – Standing Height
### Mobile Monitor Easel for 52″-55″ Monitor – Seated Height

**Accommodates VESA® Hole Patterns with a central location:**
- 200mm x 200mm
- 300mm x 300mm
- 400mm x 400mm

**Maximum Load:**
- 70 lbs. Total (includes weight of monitor and any other mounted equipment such as a video conferencing camera)

**Monitor Size Requirements**

| | Minimum | Maximum |
|---|---|---|
| Width | 43″ | 50.5″ |
| Height | 28″ | 30.5″ |
| Depth | – | 2″ |
| Load | – | 70 lbs. |

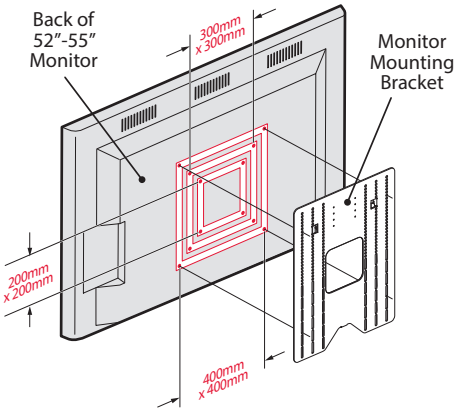


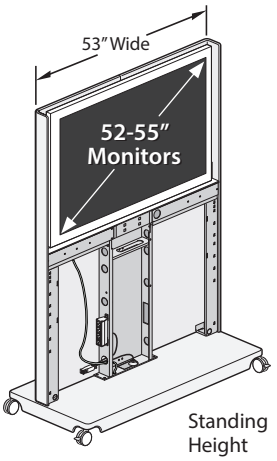


### Mobile Monitor Easel for 65″ Monitor – Seated Height

**Accommodates VESA® Hole Patterns with a central location:**
- 400mm x 400mm
- 600mm x 600mm

**Maximum Load:**
- 100 lbs. Total (includes weight of monitor and any other mounted equipment such as a video conferencing camera)

**Monitor Size Requirements**

| | Minimum | Maximum |
|---|---|---|
| Width | 51″ | 61″ |
| Height | 35″ | 37.9″ |
| Depth | – | 2″ |
| Load | – | 100 lbs. |

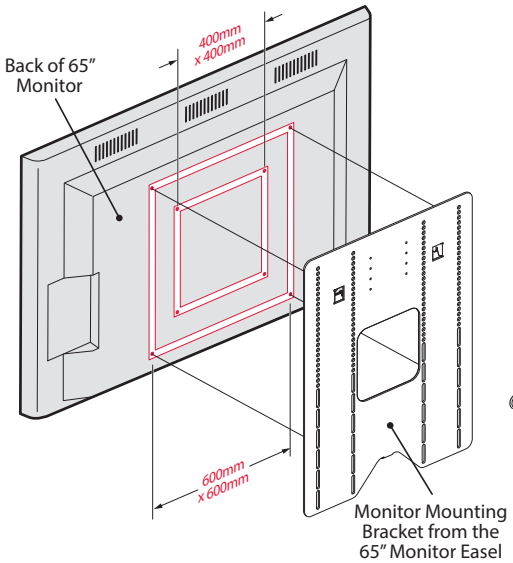


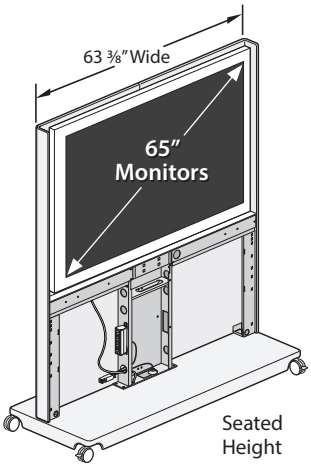


Note
- Monitors will require either an HDMI connection or a VGA+Audio Connection depending on the application.
- Monitor size is a diagonal measure the screen only (does not include the bevel/frame around the screen), the actual width of the monitor (including the bevel/frame) may not exceed the width of the shroud.

# Product Details – workware view – Tile for Mobile Monitor Easel

## Tile for Mobile Monitor Easel – Without Interface Module

- The Tile or Shelf Tile is required to cover the internal components of the Mobile Monitor Easel.
- The Tile must be specified to match the Mobile Monitor Easel size and configuration (Easels – No Interface module require the Shelf Tile – No Interface Module.).
- Includes one tile and attachment hardware.
- Tile is removable to access components on easel interior.
- Available in variety of materials and finishes:
  - Steel with painted surface
  - Laminate surface with 1mm edgeband
  - Wood surface with natural or double-cut veneer
  - Fabric surface tackable with standard core
- Wood Grain Direction:

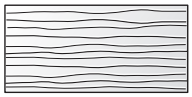

Double Cut Veneer
Wood TIle
Low Gloss

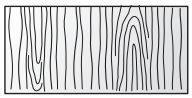

Natural Veneer
Wood Tile
Standard Gloss

### Tile for Mobile Monitor Easel – Without Interface Module (Seated Height 52″-55″ Monitor)

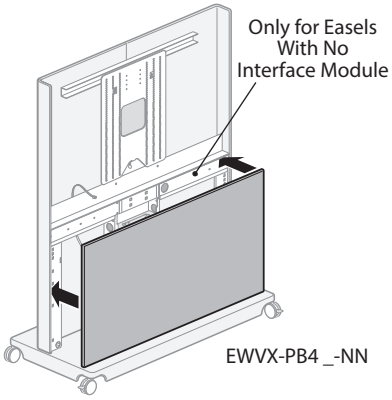


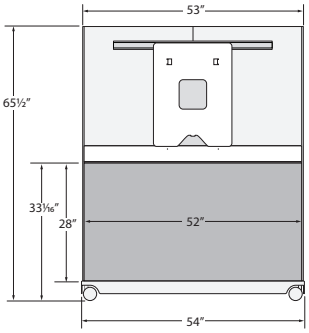


### Tile for Mobile Monitor Easel – Without Interface Module (Seated Height 65″ Monitor)

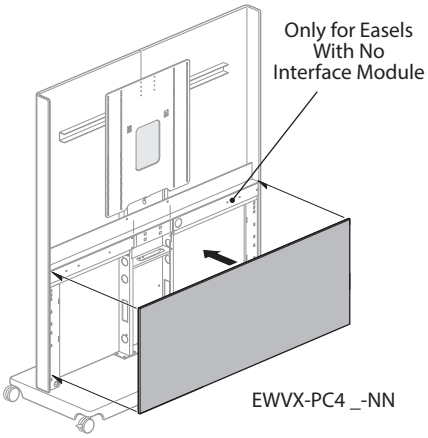


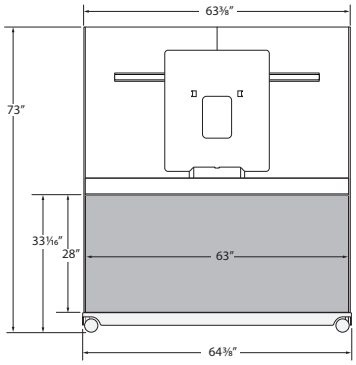


### Tile for Mobile Monitor Easel – Without Interface Module (Standing Height 52″-55″ Monitor)

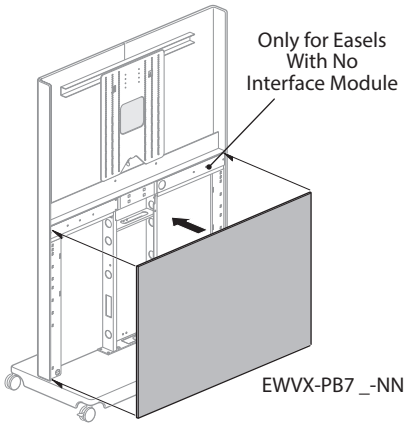


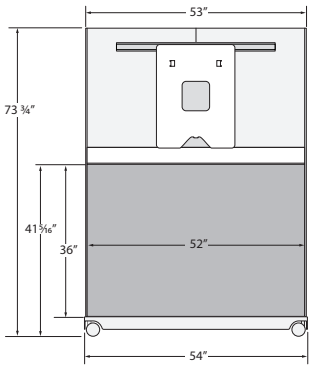

## Tile for Mobile Monitor Easel – Switching or Non-Switching Interface Module

- The Tile or Shelf Tile is required to cover the internal components of the Easel.
- The Easel Tile must be specified to match the Easel size and configuration (switching and non-switching Easels require the Tile for switching or non-switching Interface Module).
- Includes one tile and attachment hardware.
- Tile is removable to access components on easel interior.
- Available in variety of materials and finishes:
  - Steel with painted surface
  - Laminate surface with 1mm edgeband
  - Wood surface with natural or double-cut veneer
  - Fabric surface tackable with standard core
- Wood Grain Direction:

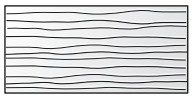

Double Cut Veneer
Wood Tile
Low Gloss

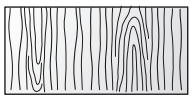

Natural Veneer
Wood Tile
Standard Gloss

### Tile for Mobile Monitor Easel – Switching or Non-Switching Interface Module
(Seated Height 52″-55″ Monitor)

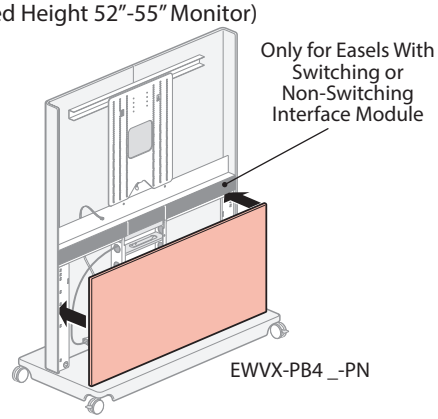


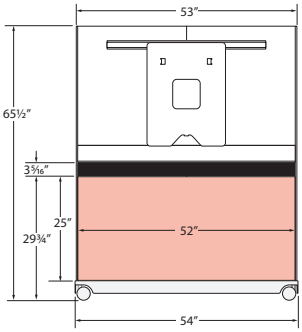


### Tile for Mobile Monitor Easel – Switching or Non-Switching Interface Module
(Seated Height 65″ Monitor)

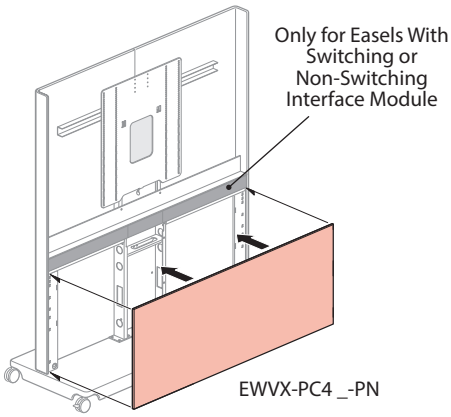


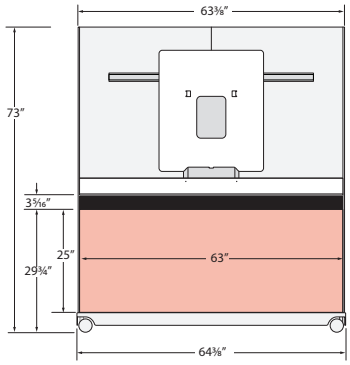


### Tile for Tile for Mobile Monitor Easel – Switching or Non-Switching Interface Module
(Standing Height 52″-55″ Monitor)

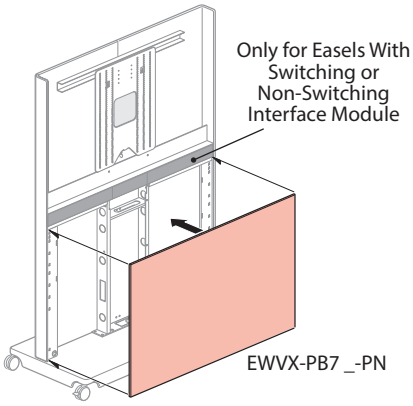


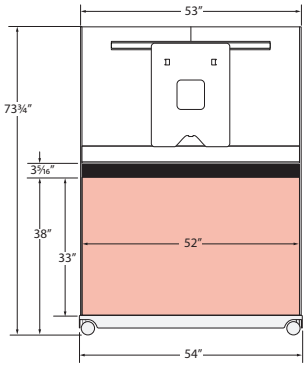

# Product Details – workware view – Shelf Tile for Mobile Monitor Easel

## Shelf Tile for the Mobile Monitor Easel – No Interface Module

- A Tile or Shelf Tile is required to cover the internal components of the Mobile Monitor Easel.
- The Shelf Tile – No Interface Module should only be used with the Easel – No Interface Module.
- Available only in painted steel finish (tile and shelves are available in one trim color)
- Maximum load 35 pounds per shelf.

NO INTERFACE Module

**Shelf Tile for Mobile Monitor Easel – No Interface Module** (Seated Height 52″-55″ Monitor)
- Includes: (1) steel tile with (2) fixed shelves, (1) support backer, (2) shelving brackets and (2) shelving bracket covers.

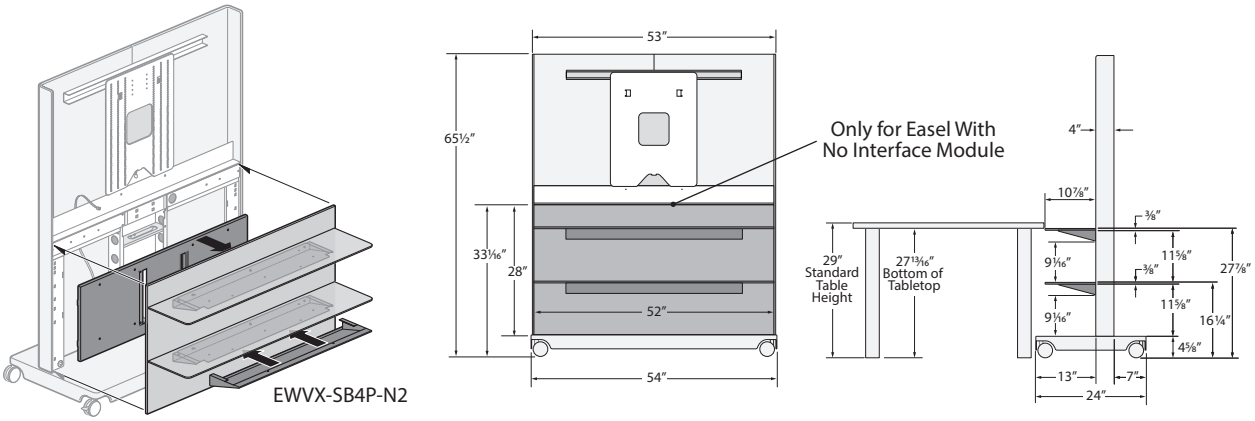


**Shelf Tile for Mobile Monitor Easel – No Interface Module** (Standing Height 52″-55″ Monitor)
- Includes: (1) steel tile with (1) fixed shelf, (1) support backer, (1) shelving bracket and (1) shelving bracket cover.

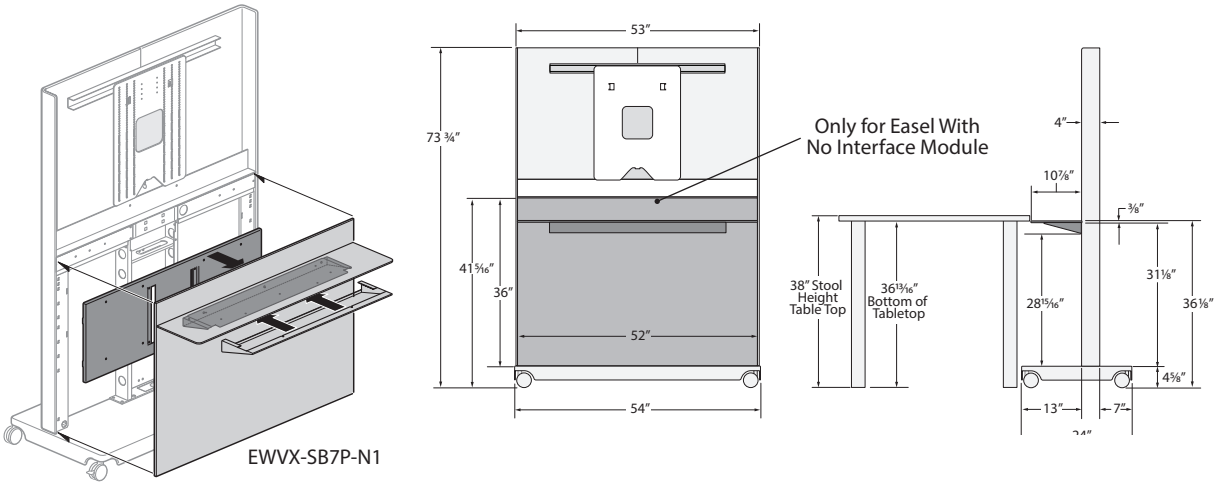


**Shelf Tile for Mobile Monitor Easel – No Interface Module** (Seated Height 65″ Monitor)
- Includes: (1) steel tile with (2) fixed shelves, (1) support backer, (2) shelving brackets and (2) shelving bracket covers.

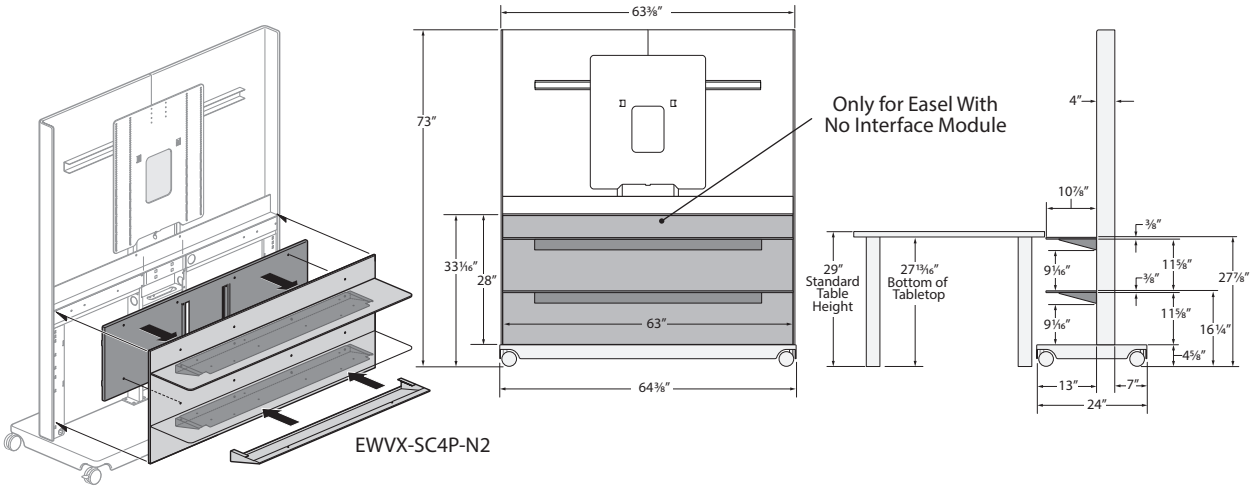

## Shelf Tile for Mobile Monitor Easel – Switching or Non-Switching Interface Module

- The Tile or Shelf Tile is required to cover the internal components of the Easel.
- The Shelf Tile – for switching or non-switching Interface Module should only be used with the Easel – for switching or non-switching Interface Module.
- Available only in painted steel finish (tile and shelves are available in one trim color)
- Maximum load 35 pounds per shelf.

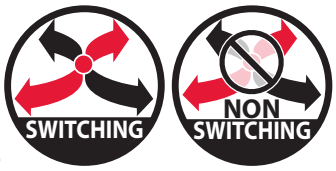


### Shelf Tile for Mobile Monitor Easel – Switching or Non-Switching Interface Module

(Seated Height 52"-55" Monitor)

- Includes: (1) steel tile with (2) fixed shelves, (1) support backer, (2) shelving brackets and (2) shelving bracket covers.

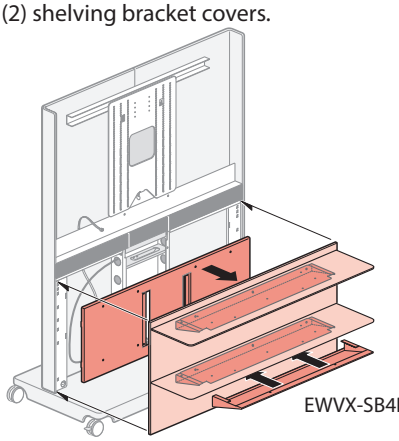

EWVX-SB4P-P2

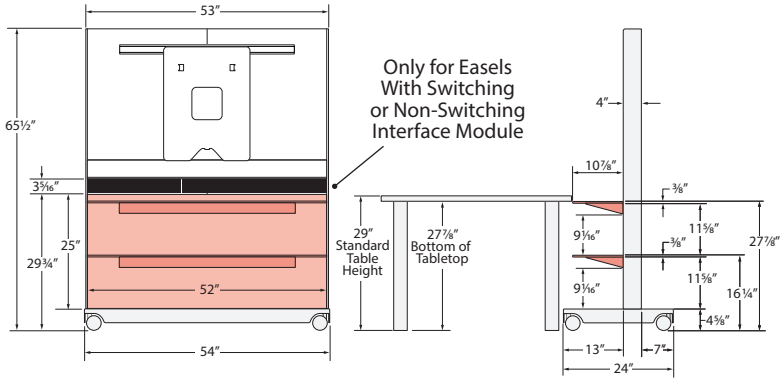


### Shelf Tile for Mobile Monitor Easel – Switching or Non-Switching Interface Module (Standing Height 52"-55" Monitor)

- Includes: (1) steel tile with (1) fixed shelf, (1) support backer, (1) shelving bracket and (1) shelving bracket cover

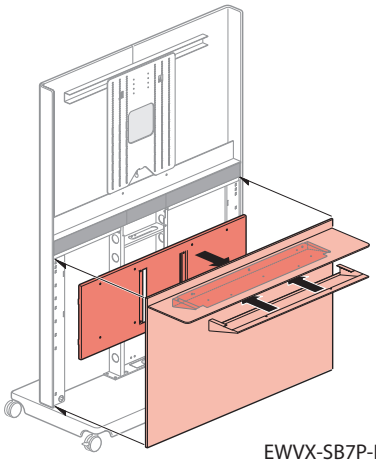

EWVX-SB7P-P1

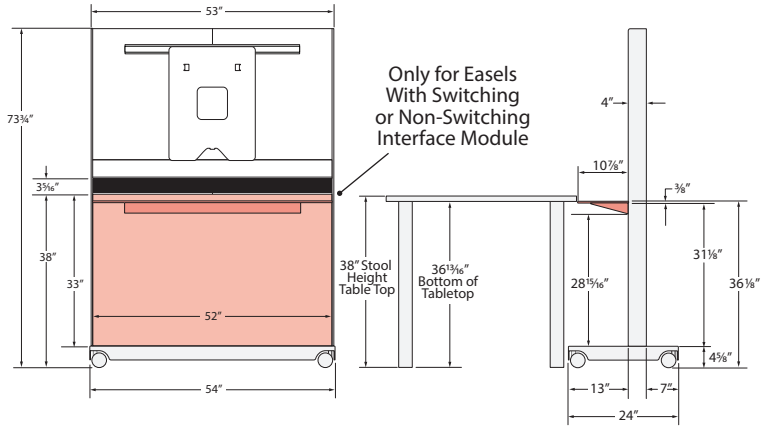


### Shelf Tile for Mobile Monitor Easel – Switching or Non-Switching Interface Module (Seated Height 65" Monitor)

- Includes: (1) steel tile with (2) fixed shelves, (1) support backer, (2) shelving brackets and (2) shelving bracket covers.

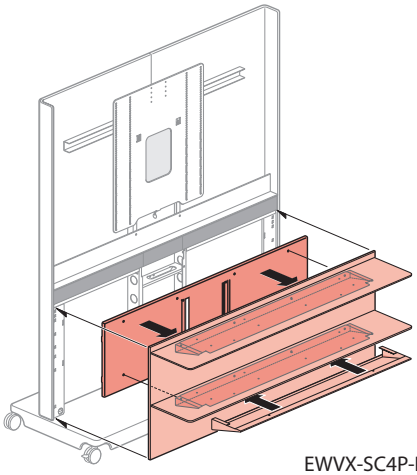

EWVX-SC4P-P2

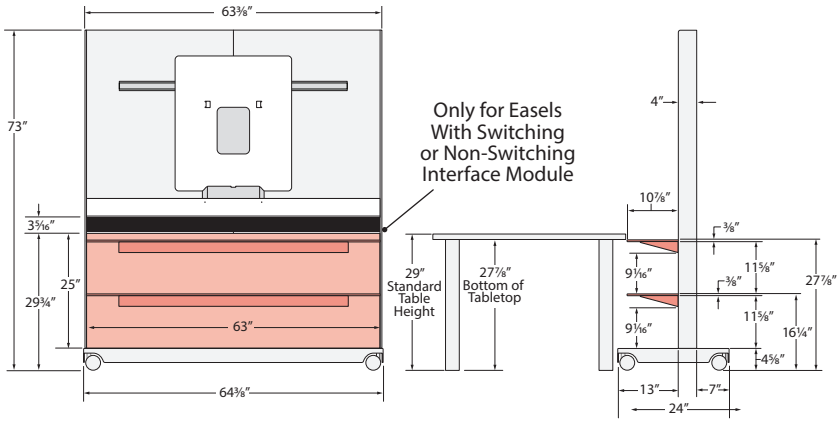

# Product Details – workware Accessories – Camera Mount Shelf

## Camera Mount Shelf (T) – for Table Mount or Easel Mount

- The Camera Mount Shelf (T) is designed to mount to the Monitor Mounting Bracket of a workware view – Mobile Monitor Easel. It can accommodate one video conferencing camera (field supplied) on an adjustable slot.
- The Monitor Mounting Bracket has a range of Camera Mount Shelf holes to accommodate different monitor sizes. This allows the Camera Mount Shelf to be adjusted up and down in one inch increments.
- Includes one painted steel camera mount shelf and attachment hardware - trim color is specified.

**Camera Mount Shelf –**
**For Use with Table Mount / Easel Mount**
**EWVC-0506-T**

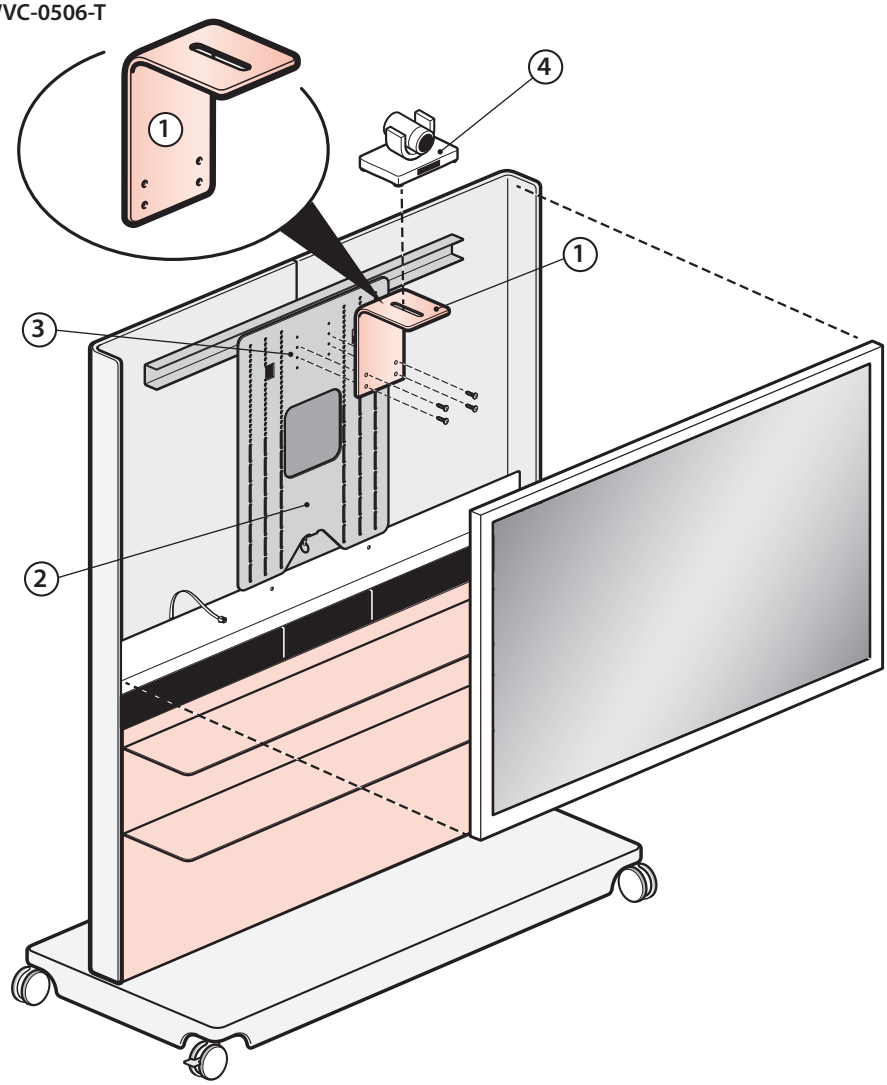


1. Camera Mount Shelf (T)
2. Monitor Mounting Bracket
3. Camera Mount Shelf Mounting Holes
4. Video Conferencing Camera (Field Supplied)

Note • **The monitor and any other mounted equipment such as video conferencing camera may not exceed the Mobile Monitor Easels maximum load capacity (70lbs maximum for 52”-55” units and 100lbs for 65” Units).**

# Product Application
# workware Mobile Monitor Easels

# Product Application – Overview of Mobile Monitor Easel Technology Applications

- Examine the different levels of connectivity and decide which configuration best meets user requirements.
- The technology application will drive which workware components are must be specified.

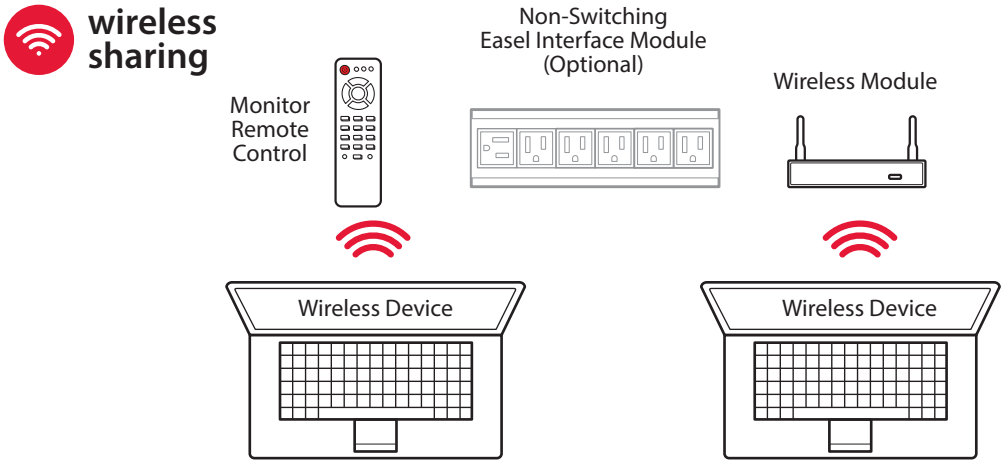


**Method for Sharing Presentations:**
(How users share their presentation on the monitor)
- **Wireless Sharing** – Presenters use workware's Wireless Presentation Software (WPS)to access the building's wireless wi-fi network which provides them audio/video access to the monitor to share presentations.

**Method for Switching Between Presenters:**
(How users switch the monitor presentation to other users)
- **Wireless Switching** – Users may switch between wireless presenters using controls on workware's Wireless Presentation Software.

**Method for Controlling Monitor Power:**
- **Remote Control** – Monitor power is controlled using the monitor remote control (field supplied) or the power button on the monitor.

**Maximum Number of Connections to the Monitor:**
- **workware Wireless Pro**
  – Unlimited* Simultaneous presentations of users/content.
- **workware Wireless Base**
  – Upto 10* simultaneous users presentations.
  – Upto 4* simultaneous content presentations.

**The amount of simultaneous users/content is limited to the bandwidth capabilities of the network.*

**Advantages:**
- Works well with large or small groups of presenters.
- Presenters can be located anywhere in the room since they aren't tied to audio/video cables.
- Wireless Base and Pro software offers enhanced capabilities for presentations.

**Considerations:**
- Not recommended for Video Conferencing applications.
- Relies on Remote Control to turn monitor on and off.
- Requires cabled access to building network (if Wireless Module is configured in stand alone mode a network connection is not required).
- All user devices must be installed with Wireless Presentation Software (WPS) before they can present wirelessly.
- Wireless presenters require access to the building wireless network to connect to the monitor.

**May be specified with:**

**No-Interface Components only.**
(See Section for Wireless Sharing – Option 1)
- Uses only components for No-Interface Module.

**Non-Switching Components only.**
(See Section for Wireless Sharing – Option 2)
- Uses only components for Non-Switching - Interface Module.

# Product Application – Overview of Mobile Monitor Easel Technology Applications

- Examine the different levels of connectivity and decide which configuration best meets user requirements.
- The technology configuration will drive which workware components are required.

## cable sharing

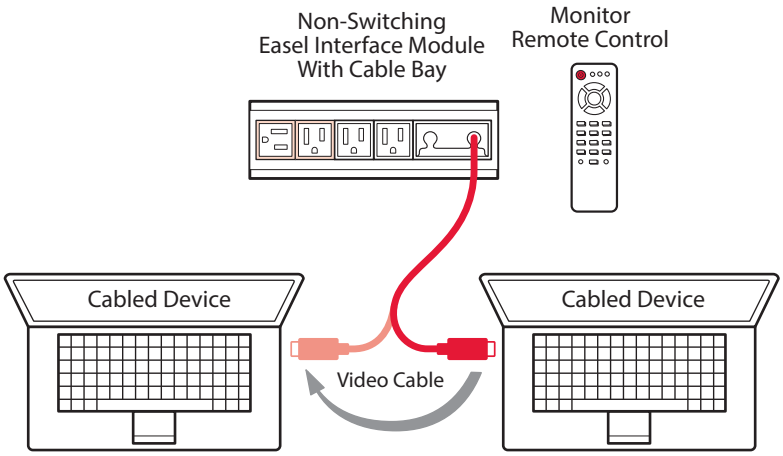


### Method for Sharing Presentations:
(How users share their presentation on the Monitor)

- **Cable Sharing** – Presenters use a single audio/video cable connected directly to monitor, this provides audio/video access to the monitor to share presentations.

### Method for Switching Between Presenters:
(How users switch the monitor presentation to other users)

- **Physical Cable Switching** – Users switch between presenters by disconnecting the audio/video cable from the first user's device and connecting it to the second user's device.

### Method for Controlling Monitor Power:

- **Remote Control** – Monitor power is controlled using the monitor remote control (field supplied) or the power button on the monitor.

### Number of Connections to Monitor :

- **(1) Connection To Monitor** – Since the audio/video cable is directly wired to the monitor this application can only provide one connection to the monitor for presentations.

### Supported Input Devices:

- **Cabled Connections** - Most user devices with HDMI or VGA+Audio cable connections can connect to the monitor for presentations (some devices may require field supplied adapter cables if they lack HDMI or VGA+Audio connections).
  – Notebook Computers (Windows/Mac)
  – Tablets (May require field supplied HDMI or VGA adapter cables)
  – Mobile Devices/Smart Phones (May require field supplied HDMI or VGA adapter cables)
  – DVD/Blu-Ray Players

### Advantages:

- Simple configuration and operation.
- Plug and play access for devices - no software needed.
- Does not require building network access or configuration.
- Better for smaller groups of presenters.

### Considerations:

- Presenters must be within reach of cables.
- Cables may block movement in the space.
- Not recommended for Video Conferencing applications.
- Does not support the Quad View feature.
- Limited number of connections to monitor.
- Switching between users is slower and more cumbersome.
- Relies on Remote Control to turn monitor on and off.

**May be specified with:**

**Non-Switching Components only.**
(See Section for Cable Sharing)
- Uses only components for Non-Switching - Interface Module.

# Product Application – Wireless Sharing (Option 1) – Mobile Monitor Easel Application

## Wireless Sharing (Option 1) – Mobile Monitor Easel Application Separately Specified Components

### Step 1– Technology:

**SEPARATELY SPECIFY:**

**(1) Wireless Module**

**(1) HDMI Cable** to connect Wireless Module to Monitor

**A Wireless Module**

• See Price List For Current Model

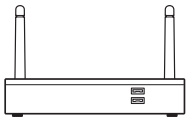

**B (1) HDMI Cable**

EWCX-_ _ 01-H

**Tip**

• Field supplied monitors must include an HDMI connection to connect the Wireless Module using a separately specified HDMI Cable.

### Step 2– Easel:

**SEPARATELY SPECIFY:**

**(1) Mobile Monitor Easel** with needed monitor size and height.

**C Mobile Monitor Easel – No Interface Module**

52"/55" Monitor–Seated Height EWVM-SB4P-N
65" Monitor–Seated Height EWVM-SC4P-N
52"/55" Monitor–Standing Height EWVM-SB7P-N

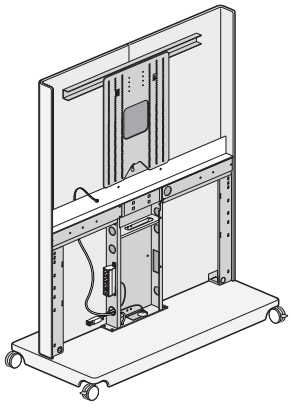

### Step 3– Tile:

**SEPARATELY SPECIFY:**

**(1) Tile or Shelf Tile** must match easel size and type.

**D Tile for Mobile Monitor Easel – No Interface Module**

(Available with wood, laminate, fabric or painted steel finishes)

52" / 55" Monitor - Seated Height EWVX-PB4_-NN
65" Monitor - Seated Height EWVX-PC4_-NN
52"/55" Monitor - Standing Height EWVX-PB7_-NN

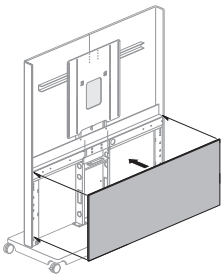

OR

**Shelf Tile for Mobile Monitor Easel – No Interface Module**

(painted steel finish)
52" / 55" Monitor - Seated Height EWVX-SB4P-N2
65" Monitor - Seated Height EWVX-SC4P-N2
52"/55" Monitor - Standing Height EWVX-SB7P-N1

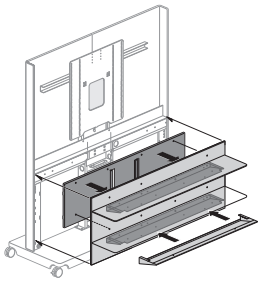

## Field Supplied Components:

**E Monitor with Remote Control**
(Required – Field Supplied)

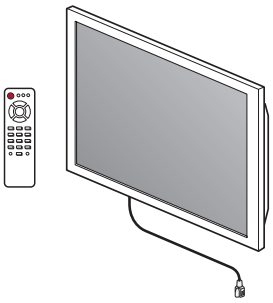

**F Data Cable with RJ-45 Connector**
(Required – Field Supplied)
Specify cable length to reach from RJ-45 Connector on the back of the easel to the network connection point in the room.

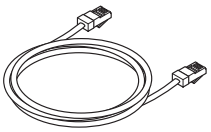

# Product Application – Wireless Sharing (Option 1) – Mobile Monitor Easel Application

## Wireless Sharing (Option 1) – Mobile Monitor Easel Application – Cabling Diagram

Wireless Sharing Option 1 - is specified with a Mobile Monitor Easel – No Interface Module and a Wireless Module to provide wireless audio/video access to the monitor. Wireless Sharing (Option 1) is intended for applications that do not require power/data access from the easel; consider Wireless Sharing (Option 2) if power/data access from the easel is required.

**Step 1 - Technology:**
SEPARATELY SPECIFY:
- A Wireless Module
- B HDMI Cable

+

**Step 2 - Easel:**
SEPARATELY SPECIFY:
- C Mobile Monitor Easel – No Interface Module

+

**Step 3 – Tile:**
SEPARATELY SPECIFY:
- D Tile For Mobile Monitor Easel – No Interface Module
  - or -
  Shelf Tile For Mobile Monitor Easel – No Interface Module

=

**Wireless Sharing (Option 1) – Mobile Monitor Easel Application**

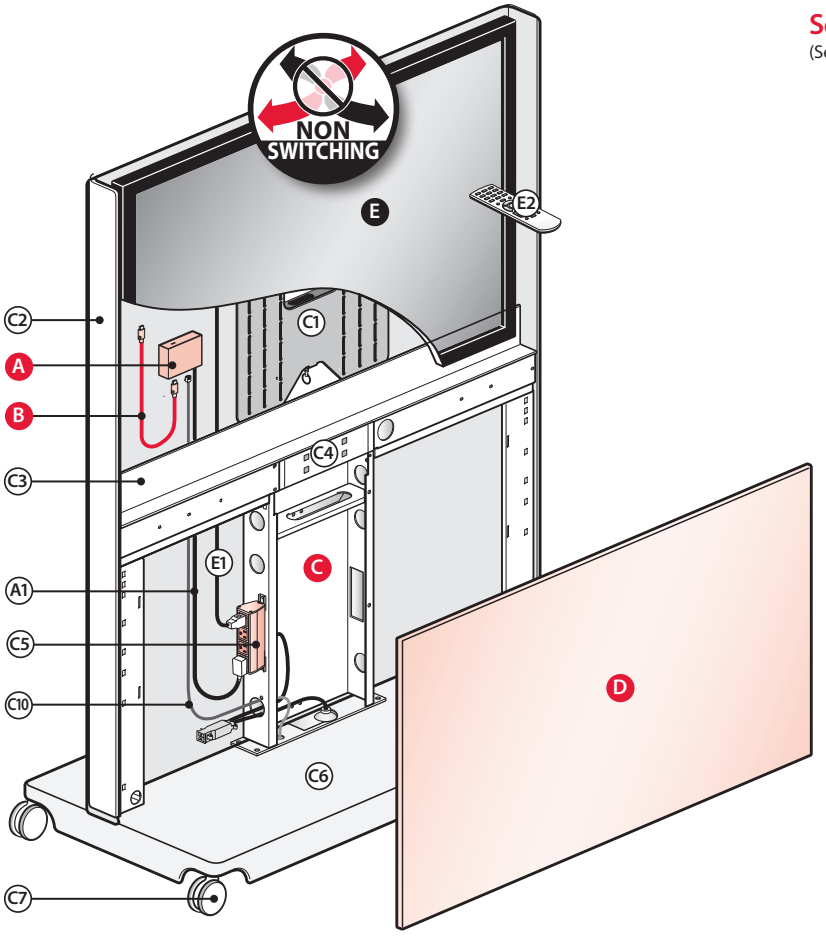


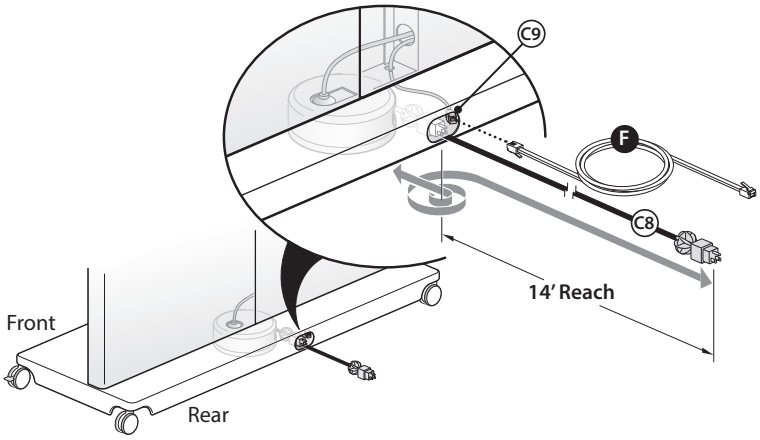


## Separately Specified Components:

(See Glossary for component details)

### Step 1 – Technology:

**A Wireless Module**
- See Price List For Current Model

Wireless Module Includes:
- A1 Wireless Module Power Cable (2' long)

**B HDMI Cable** (10' long)
EWCX-_ _ 01-H

### Step 2 – Easel:

**C Mobile Monitor Easel – No Interface Module**
EWVM-S _ _ P-N

Interface Module Includes:
- C1 Monitor Bracket
- C2 Shroud
- C3 Front Trim
- C4 Utility Fascia Cover Plate
- C5 Internal Power Tap
- C6 Base
- C7 Casters
- C8 Retractable Power Cable (14' reach)
- C9 RJ45 Data Coupler
- C10 RJ45 Patch Cable (5' long)

### Step 3 – Specify Easel Tile

**D Tile for Mobile Monitor Easel –**
No Interface Module
EWVX-P _ _ _ -NN

OR

**Shelf Tile for Mobile Monitor Easel**
No Interface Module
EWVX-S _ _P-N _

## Field Supplied Components

**E Monitor**
Monitor Includes:
- E1 Monitor Power Cord (Lengths vary by manufacturer)
- E2 Monitor Remote Control

**F Network Patch Cable with RJ-45 Connectors**
(Specify cable length to reach from RJ-45 Connector on the back of the easel to the network connection point in the room.)

# Product Application – Wireless Sharing (Option 2) – Mobile Monitor Easel Application

## Wireless Sharing (Option 2) – Mobile Monitor Easel Application Separately Specified Components

### Step 1– Technology:

**SEPARATELY SPECIFY:**

**(1) Interface Module**

**(1) Wireless Module**

**(1) HDMI Cable** to connect Wireless Module to Monitor

**A Interface Module – Non-Switching 6-Port**

EWCE - _ _ _ _- NNNNBNPW

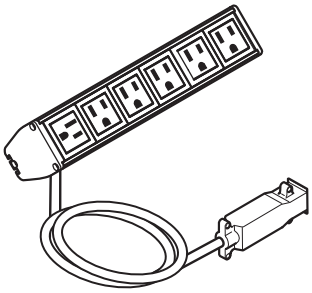

**B Wireless Module**

• See Price List For Current Model

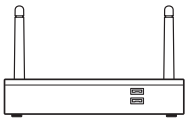

**C (1) HDMI Cable**

EWCX-_ _ 01-H

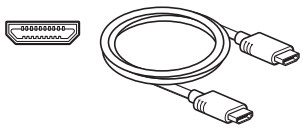

### Step 2– Easel:

**SEPARATELY SPECIFY:**

**(1) Mobile Monitor Easel** with needed monitor size and height.

**D Mobile Monitor Easel – For Non-Switching Interface Module**

52"/55" Monitor – Seated Height EWVM-SB4P-P
65" Monitor – Seated Height EWVM-SC4P-P
52"/55" Monitor – Standing Height EWVM-SB7P-P

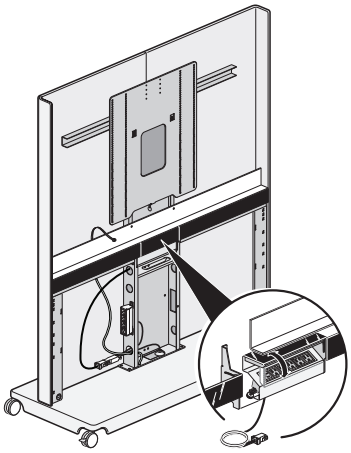

### Step 3– Tile:

**SEPARATELY SPECIFY:**

**(1) Tile or Shelf Tile** must match easel size and type.

**E Tile for Mobile Monitor Easel – For Switching or Non-Switching Interface Module**

(wood, laminate, fabric or painted steel finishes)
52" / 55" Monitor - Seated Height EWVX-PB4 _-PN
65" Monitor - Seated Height EWVX-PC4_-PN
52"/55" Monitor - Standing Height EWVX-PB7_-PN

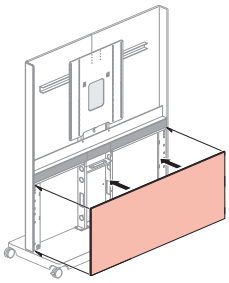

OR

**Shelf Tile for Mobile Monitor Easel – For Switching or Non-Switching Interface Module**

(painted steel finish)
52" / 55" Monitor - Seated Height EWVX-SB4P-P2
65" Monitor - Seated Height EWVX-SC4P-P2
52"/55" Monitor - Standing Height EWVX-SB7P-P1

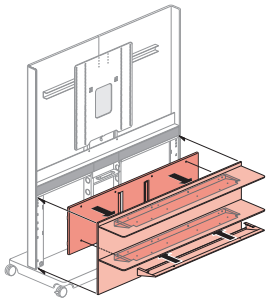

## Field Supplied Components:

**F Monitor with Remote Control**
(Required – Field Supplied)

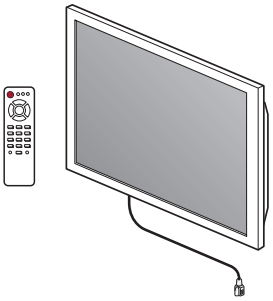

**G Data Cable with RJ-45 Connector**
(Required – Field Supplied)
Specify cable length to reach from RJ-45 Connector on the back of the easel to the network connection point in the room.

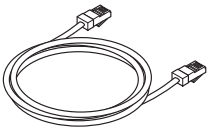

# Product Application – Wireless Sharing (Option 2) – Mobile Monitor Easel Application

## Wireless Sharing (Option 2) – Mobile Monitor Easel Application – Cabling Diagram

Wireless Option 2 - is specified with a Non-Switching Mobile Monitor Easel and a Non-Switching Interface Module to provide users with power/data access from the easel. If users do not require power/data access from the easel consider Wireless Sharing Option 1.

**Step 1 - Technology:**

SEPARATELY SPECIFY:

- A Interface Module – Non-Switching 6-Port
- B Wireless Module
- C HDMI Cable

+

**Step 2 - Easel:**

SEPARATELY SPECIFY:

- D Mobile Monitor Easel – For Non-Switching Interface Module

+

**Step 3 – Easel Tile:**

SEPARATELY SPECIFY:

- E Tile For Mobile Monitor Easel – Switching or Non-Switching Interface Module
  - or -
  Shelf Tile For Mobile Monitor Easel – Switching or Non-Switching Interface Module

=

**Wireless Sharing (Option 2) – Mobile Monitor Easel Application**

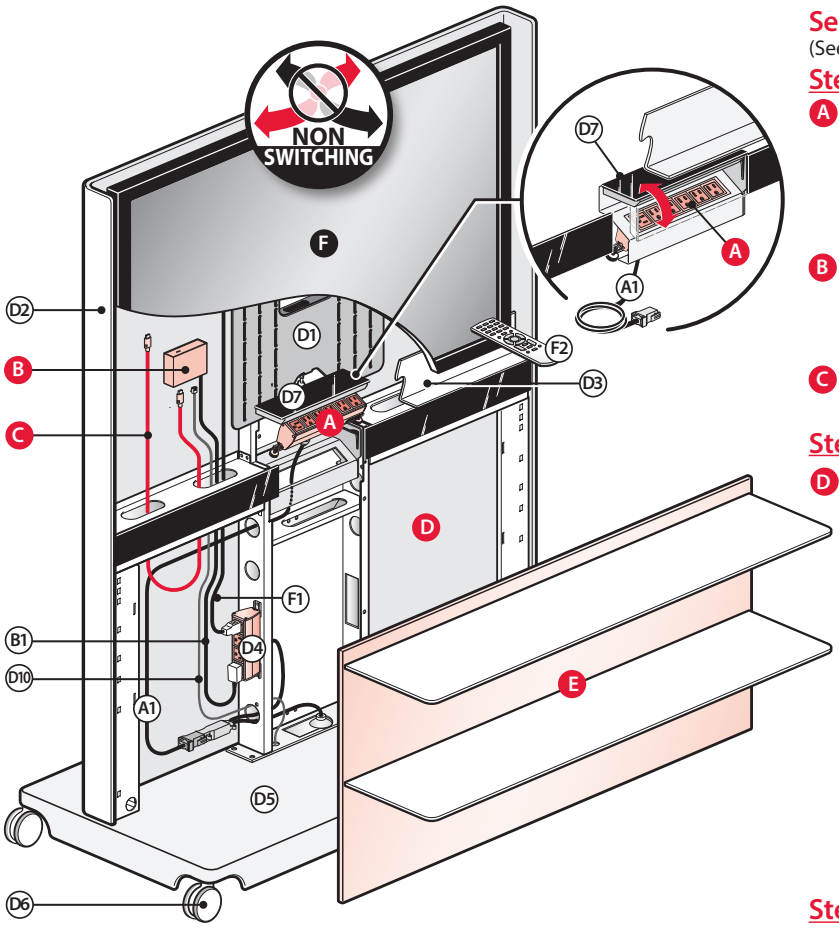


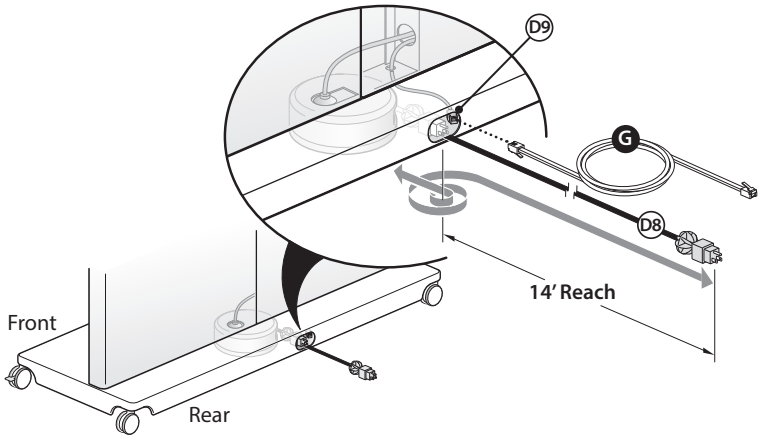


## Separately Specified Components:

(See Glossary for component details)

### Step 1 – Specify Technology:

**A Interface Module – Non-Switching 6-Port**
EWCE - _ _ _ _- NNNNBNPW

Non-Switching Interface Module Includes:

- A1 Interface Module Power Cable (2' long)

**B Wireless Module**
• See Price List For Current Model

Wireless Module Includes:

- B1 Wireless Module Power Cable (5' long)

**C HDMI Cable** (10' long)
EWCX-_ _ 01-H

### Step 2 – Easel:

**D Mobile Monitor Easel – For Non-Switching Interface Module**
EWVM-S _ _ P-P

Easel Includes the following components:

- D1 Monitor Bracket
- D2 Shroud
- D3 Front Trim
- D4 Internal Power Tap
- D5 Base
- D6 Casters
- D7 Flipper Door
- D8 Retractable Power Cable (14' reach)
- D9 RJ45 Data Coupler
- D10 RJ45 Patch Cable (5' long)

### Step 3 – Tile

**E Shelf Tile for Mobile Monitor Easel –**
For Switching or Non-Switching Interface Module
EWVX-S _ _P-P _

OR

**Tile for Mobile Monitor Easel –**
For Switching or Non-Switching Interface Module
EWVX-P _ _ _ -PN

## Field Supplied Components

**F Monitor**

Monitor Includes:

- F1 Monitor Power Cord (Lengths vary by manufacturer)
- F2 Monitor Remote Control

**G Network Patch Cable with RJ-45 Connectors**
(Specify cable length to reach from RJ-45 Connector on the back of the easel to the network connection point in the room.)

# Product Application – Cable Sharing - Mobile Monitor Easel Application

## Cable Sharing – Mobile Monitor Easel Application Separately Specified Components

### Step 1– Technology:

**SEPARATELY SPECIFY:**

**(1) Interface Module**

**(1) User Audio/Video Cable** at needed length (Choice of HDMI or VGA+Audio)

**A (1) Interface Module – Non-Switching 6-Port**

EWCE - _ _ _ _- NNNNBNPW

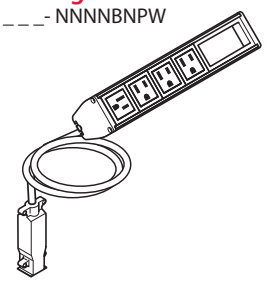

**B (1) HDMI Cable** (10′ Long)

EWCX-1001-H

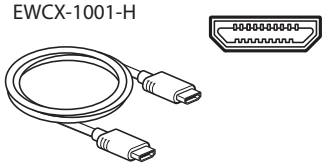

OR

**(1) VGA + Audio Cable** (12′ Long)

EWCX-1001-V

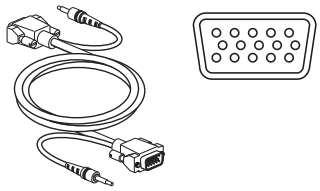

Note

The 10′ HDMI cable and 12′ VGA+ Audio Cable can reach approximately 2′ out from the easel. Longer Cables may be specified but this will increase the risk of cables tangling inside the easel.

### Step 2– Easel:

**SEPARATELY SPECIFY:**

**(1) Mobile Monitor Easel** with needed monitor size and height.

**C Mobile Monitor Easel – For Non-Switching Interface Module**

52″/55″ Monitor – Seated Height EWVM-SB4P-P
65″ Monitor – Seated Height EWVM-SC4P-P
52″/55″ Monitor – Standing Height EWVM-SB7P-P

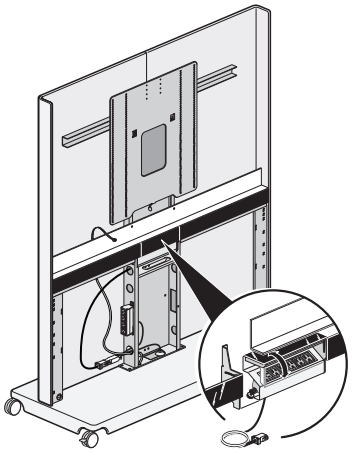

### Step 3– Tile:

**SEPARATELY SPECIFY:**

**(1) Tile or Shelf Tile** must match easel size and type.

**D Tile for Mobile Monitor Easel – For Switching or Non-Switching Interface Module**

(wood, laminate, fabric or painted steel finishes)
52″ / 55″ Monitor - Seated Height EWVX-PB4 _-PN
65″ Monitor - Seated Height EWVX-PC4_-PN
52″/55″ Monitor - Standing Height EWVX-PB7_-PN

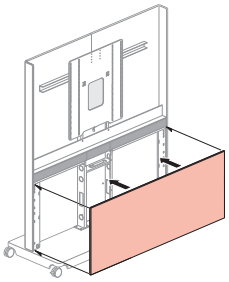

OR

**Shelf Tile for Mobile Monitor Easel – For Switching or Non-Switching Interface Module**

(painted steel finish)
52″ / 55″ Monitor - Seated Height EWVX-SB4P-P2
65″ Monitor - Seated Height EWVX-SC4P-P2
52″/55″ Monitor - Standing Height EWVX-SB7P-P1

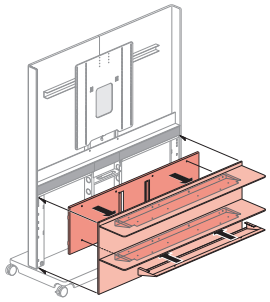

## Field Supplied Components:

**E Monitor with Remote Control**
(Required – Field Supplied)

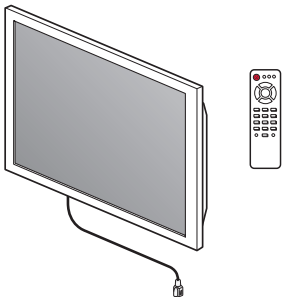

# Product Application – Cable Sharing – Mobile Monitor Easel Application

## Cable Sharing – Mobile Monitor Easel Application – Cabling Diagram

**Step 1 - Technology:**
SEPARATELY SPECIFY:
- A Interface Module – Non-Switching 6-Port
- B HDMI Cable - or - VGA+Audio Cable

+

**Step 2 - Easel:**
SEPARATELY SPECIFY:
- C Mobile Monitor Easel – For Non-Switching Interface Module

+

**Step 3 – Tile:**
SEPARATELY SPECIFY:
- D Tile For Mobile Monitor Easel – Switching or Non-Switching Interface Module - or - Shelf Tile For Mobile Monitor Easel – Switching or Non Switching Interface Module

=

Cable Sharing – Mobile Monitor Easel Application

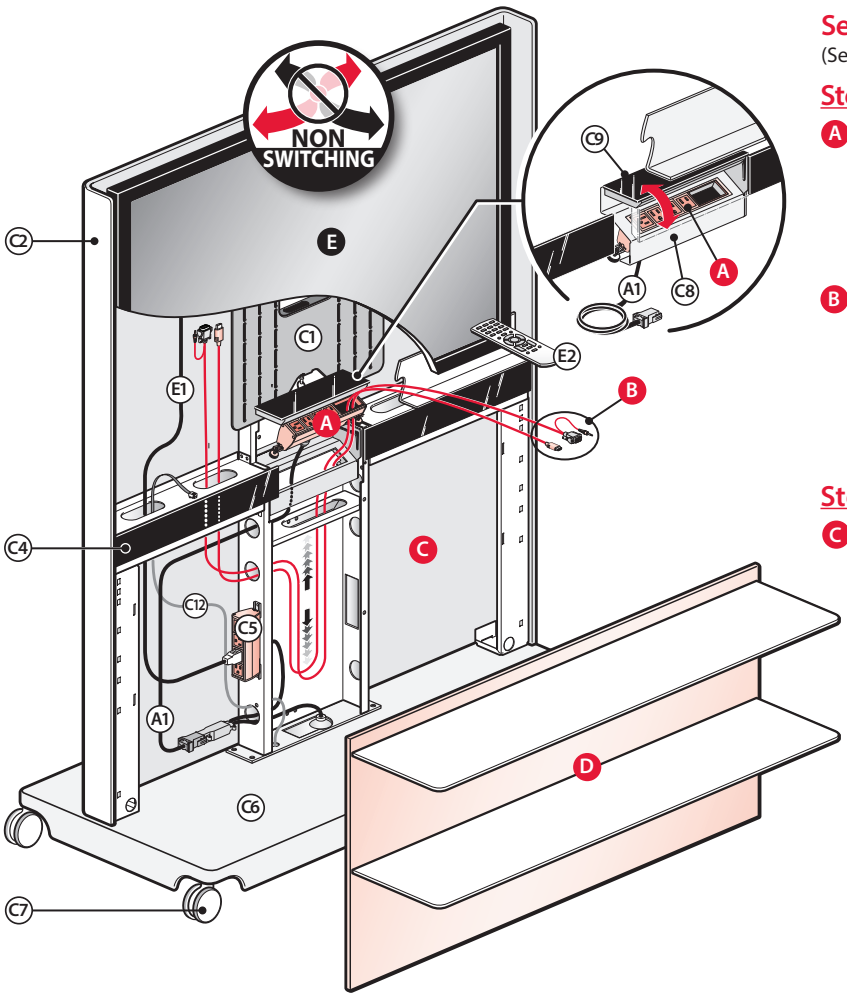


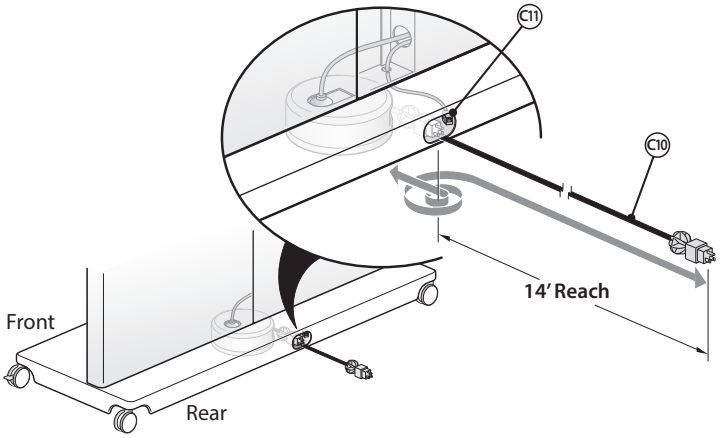


## Separately Specified Components

(See Glossary for component details)

### Step 1 – Technology:

**A Interface Module – Non-Switching 6-Port**
EWCE - _ _ _ _- NNNNBNPW
Non-Switching Interface Module Includes:
- A1 Interface Module Power Cable (2' long)

**B Audio/Video Cable**
**HDMI Cable** (10' Long)
EWCX-1001-H

OR

**VGA+Audio Cable** (12' Long)
EWCX-10 01-V

### Step 2 – Easel:

**C Mobile Monitor Easel – For Non-Switching Interface Module**
EWVM-S _ _ P-P
Includes the following components:
- C1 Monitor Bracket
- C2 Shroud
- C3 Front Trim
- C4 Utility Fascia
- C5 Internal Power Tap
- C6 Base
- C7 Casters
- C8 Interface Module Bracket
- C9 Flipper Door
- C10 Retractable Power Cable (14' reach)
- C11 RJ45 Data Coupler
- C12 RJ45 Patch Cable (5' long)

### Step 3 – Tile

**D Shelf Tile for Mobile Monitor Easel –**
For Switching or Non-Switching Interface Module
EWVX-S_ _P-P _

OR

**Tile for Mobile Monitor Easel –**
For Switching or Non-Switching Interface Module
EWVX-P _ _ _ -PN

## Field Supplied Components

**E Monitor**
Monitor Includes:
- E1 Monitor Power Cord (Lengths vary by manufacturer)
- E2 Monitor Remote Control

# Product Application – Digital Signage – Mobile Monitor Easel Application

## Digital Signage – Mobile Monitor Easel Application Separately Specified Components

### Step 1– Technology:

**SEPARATELY SPECIFY:**
**(1) HDMI Cable**

**A (1) HDMI Cable** (10' Long)
EWCX-1001-H

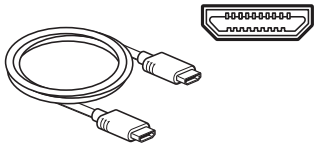

### Step 2– Easel:

**SEPARATELY SPECIFY:**
**(1) Mobile Monitor Easel** with needed monitor size and height.

**B Mobile Monitor Easel – No Interface Module**
52"/55" Monitor–Seated Height EWVM-SB4P-N
65" Monitor–Seated Height EWVM-SC4P-N
52"/55" Monitor–Standing Height EWVM-SB7P-N

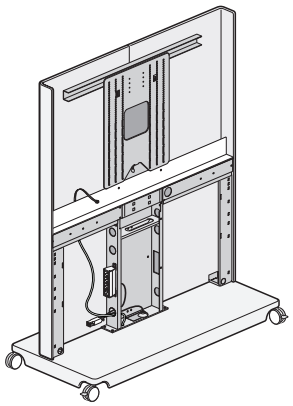

### Step 3– Tile:

**SEPARATELY SPECIFY:**
**(1) Tile or Shelf Tile**
must match easel size and type.

**C Tile for Mobile Monitor Easel – No Interface Module**
(Available with wood, laminate, fabric or painted steel finishes)
52" / 55" Monitor - Seated Height EWVX-PB4P-NN
65" Monitor - Seated Height EWVX-PC4P-NN
52"/55" Monitor - Standing Height EWVX-PB7P-NN

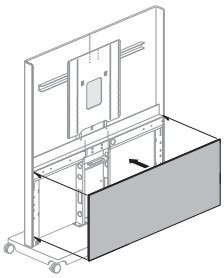

OR

**Shelf Tile for Mobile Monitor Easel – No Interface Module**
(painted steel finish)
52" / 55" Monitor - Seated Height EWVX-SB4P-N2
65" Monitor - Seated Height EWVX-SC4P-N2
52"/55" Monitor - Standing Height EWVX-SB7P-N1

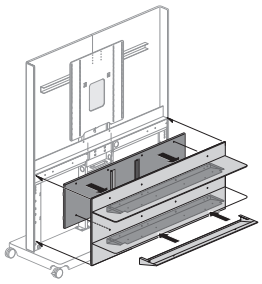

## Field Supplied Components:

**D Monitor with Remote Control**
(Required – Field Supplied)

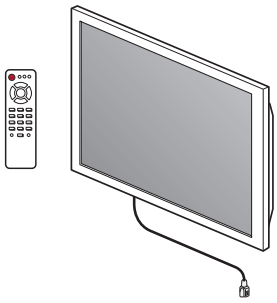

**E Data Cable with RJ-45 Connector**
(Required – Field Supplied)
- Specify cable length to reach from RJ-45 Connector on the back of the easel to the network connection point in the room.

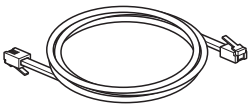

**F RJ-45 to HDMI Adapter**
(Required – Field Supplied)

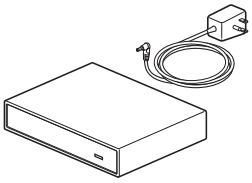

# workware Product Application – Digital Signage – Mobile Monitor Easel Application

## Digital Signage – Mobile Monitor Easel Application – Cabling Diagram

The Digital Signage Application allows the Mobile Monitor Easel to display presentations sent to the monitor through the building network. The presentation is delivered using a field supplied Network Patch Cable with RJ-45 connectors (the patch cable connects the Mobile Monitor Easel to a receptacle with a network connection) and an RJ-45 to HDMI Adapter. This application is specified with No Interface Module components since users wouldn't require monitor access on the easel.

**Step 1 - Technology:**
SEPARATELY SPECIFY:
A (1) HDMI Cable

+

**Step 2 - Easel:**
SEPARATELY SPECIFY:
B Mobile Monitor Easel – No Interface Module

+

**Step 3 – Tile:**
SEPARATELY SPECIFY:
D Tile For Mobile Monitor Easel – Switching or Non-Switching Interface Module
- or -
Shelf Tile For Mobile Monitor Easel – Switching or Non Switching Interface Module

=

Digital Signage Application

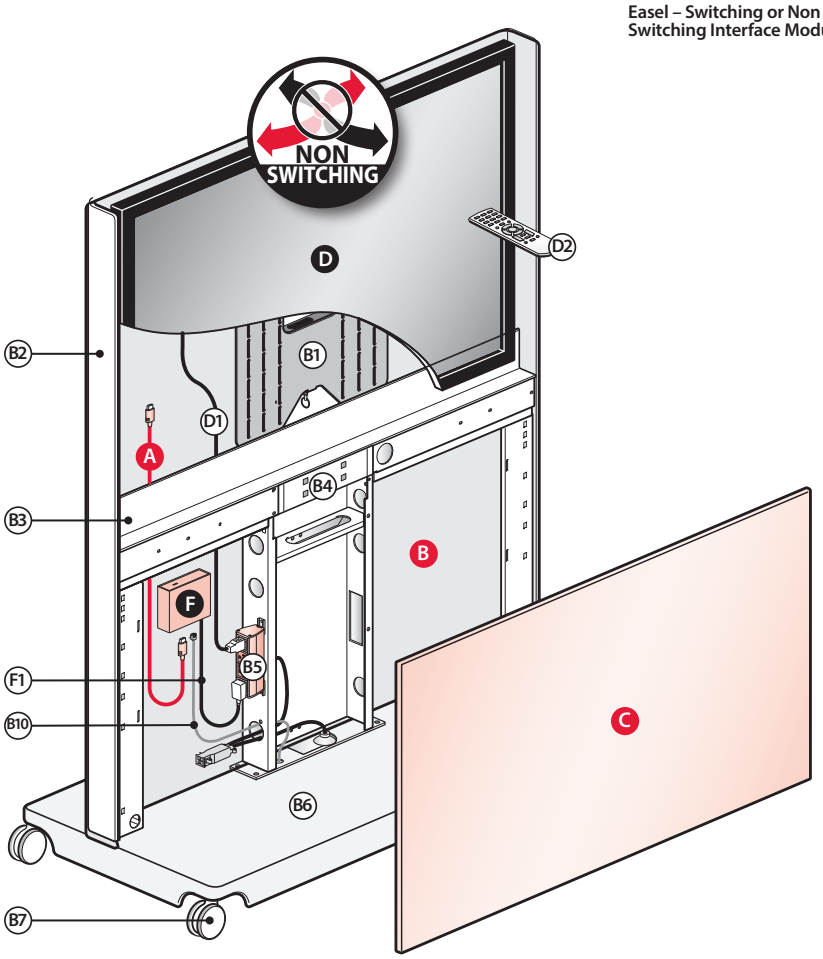


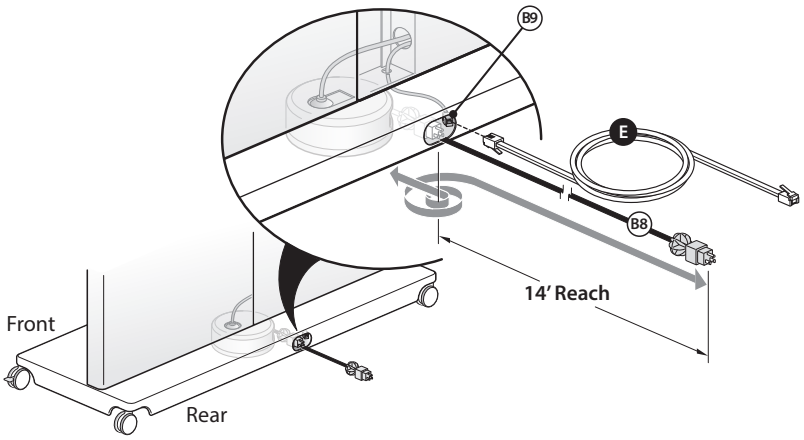


## Separately Specified Components

(See Glossary for component details)

### Step 1 – Technology:

A **(1) HDMI Cable** (10' Long)
EWCX-1001-H

### Step 2 – Easel:

B **Mobile Monitor Easel – No Interface Module**
EWVM-S _ _ P-N
**Includes the following components:**
- B1 Monitor Bracket
- B2 Shroud
- B3 Front Trim
- B4 Utility Fascia Cover Plate
- B5 Internal Power Tap
- B6 Base
- B7 Casters
- B8 Retractable Power Cable (14' reach)
- B9 RJ45 Data Coupler
- B10 RJ45 Patch Cable (5' long)

### Step 3 – Specify Easel Tile

C **Tile for Mobile Monitor Easel –**
No Interface Module
EWVX-P _ _ _ -NN

OR

**Shelf Tile for Mobile Monitor Easel –**
No Interface Module
EWVX-S _ _P-N _

## Field Supplied Components

D **Monitor**
Monitor Includes:
- D1 Monitor Power Cord (Lengths vary by manufacturer)
- D2 Monitor Remote Control

E **Network Patch Cable with RJ-45 Connectors**
(Specify cable length to reach from RJ-45 Connector on the back of the easel to the network connection point in the room.)

F **RJ-45 to HDMI Adapter**
- F1 Adapter Power Cord

# Glossary – workware

**Analog**
Single direction, non-changeable signal, that limits the ability to manipulate data.

**Bezel** (Interface Module)
Chassis or frame that fits in table top cutout and includes the Sliding Door track.

**Cable Base**
A Planes table accessory that manages cables for power and switching under the table. Available in small and large versions. The larger version provides enough concealed space to mount the Processor and Wireless Module. This allows for convenient access, installation and service.

**Cable Backup**
Applies to units with both wireless and wired functionality, wired back up refers to the cables in the unit used for connective purposes.

**Cable Bay**
The opening in Interface Module to receive video and audio cables (HDMI or VGA and 3.5mm Audio Cable). One cable bay requires two ports and accommodates two video cables.

**Cable Sharing**
Cable sharing of the cable with one user at a time. Users pass a cable to switch content share.

**Cable Sharing with Touch Control**
Cable Sharing with limited multi-user access (up to 4 per unit). Switch by using the touch control, no cable passing necessary.

**Cabled**
The transfer of display information between two or more points that are physically connected by a cable.

**Camera Mount Shelf**
A component part of workware view that supports a video conferencing camera.

**Data Jack**
Field supplied component that installs into a port that receives a data cable. Workware connect includes a multiple data adapters to accommodate most varieties of data jacks.

**Digital**
Multi directional, changeable and allows for self configuring.

**End Trim** (Interface Module)
Stationary component that provides phone cable passage and Touch Control if specified.

**HDMI Cable**
a cable that transmits both digital video and audio content. The HDMI cable also allows for streaming of HD video.

**Interface Module**
workware's elegantly designed system conceals technology chaos and blends seamlessly into the existing environment. Typically table top installed, it provides user access to power, data, touch control, and phone cable passage. Port access via sliding door. The system moves quickly from dormant to active modes with the touch of a button.

**Monitor**
a screen that displays computer generated content.

**Monitor Mount**
a product that serves to fix or hold a monitor in it's operating position.

**On-Screen Control**
The On-Screen control that allows switching between presenters, and HD video streaming in wireless mode. Provides single presenter full screen switching, quad view, and HD video playback.

**Port**
Opening in interface module that can accept a power receptacle, data jack or cable bay.

**Power Access**
Refers to the ability to power your devices through a workware unit.

**Power Receptacle**
Conventional 3 prong power outlet.

**Power Relay Cord**
A component included with switching Interface Modules that switches power to the monitor(s) on and off.

**Processor**
The central core (brain) of workware in wired mode. This component controls switching between content sharers. It controls power, switching, wireless mode, video conferencing and auto scaling. The processor is typically mounted beneath a table surface inside a cable base.

**Quad View**
This allows four people to share content on the same screen at the same time. Each users content is allocated into one of the four equal sized quadrants on the screen. Applies only to wireless.

# Glossary – workware



**Sharing**
The give and take of content and ideas for collaborative purposes.

**Shroud**
A panel that conceals the rear of the monitor to increase the aesthetic appearance of a work environment.

**Sliding Door (Interface Module)**
the sliding cover of the workware connect interface module that conceals the power, data and video cables.

**Switching**
The action of changing the sharer of content using the physical or digital controls. With workware, switching is made easy with the simple touch of a button or the click of a mouse.

**Switching Options**
Refers to the various choices within the workware connect line that allows for different levels of connectivity.

**Technology Enabled Space**
A space that encourages the use of emerging technologies for a variety of activities including collaboration, audio / video conferencing, content creation, planning and data sharing.

**Touch Control**
The physical display interface that allows you to operate the workware connect system. Operations include system power, wireless mode, video conference mode, and wired switching control. workware is the only system available that allows for touch control switching through multiple modes such as wireless, and video conferencing.

**USB Power Receptacle**
Includes two USB power receptacles per port. USB Power only–No data.

**User Device**
The device users connect to workware to make a presentation (PC, laptop, tablet, smart phone, etc.)

**VGA+Audio Cable**
An audio/video cable that consists of a VGA connector heads to carry analog video signals and a 3.5mm Audio connectors to carry audio signals. Available on most older PC laptops.

**Video Conferencing**
A space enabling participants in distant locations to take part in a conference by means of electronic sound and video communications.

**Cabled**
The transfer of display information between two or more points that are physically connected by a cable.

**Cable Backup**
Applies to units with both wireless and wired functionality, wired back up refers to the cables in the unit used for connective purposes.

**Wireless**
Transfer of display information between two or more points that are not physically connected.

**Wireless Module**
Facilitates the wireless functionality of workware.

**Wireless Sharing**
Wireless switching using the digital touch pad with unlimited user access.

**Wireless Sharing with Cable Backup**
Combines wireless switching with cable backup.

**This page intentionally left blank.**

# Technical Specifications
# workware

# Technical Specifications

## Interface Module - Non-Switching

Corded and hardwire Interface Modules are listed for U.S. and Canadian safety standards by Underwriters Laboratories, Inc. (UL & ULC). The Interface Modules are available in a wide or narrow version with either a 4-port or 6-port configuration and with option of an anodized aluminum or powder coat painted finish. Interface Modules include a communication opening for the routing of a RJ-11 cord for table top access. Interface Modules are 2-3/4" (70mm) in overall height and will sit proud of the surface top by 0.35" (9 mm). Corded units include a three (3) conductor 12' black 15-Amp cord with plug (NEMA 5-15P) and fused circuit breaker for modules with four or six 125 Volt receptacles. Hardwire units include a 3/8" flexible metal conduit, 6' in length, which enclose three (3) 12 AWG wires. Port options include standard 125 Volt 15-Amp NEMA 5-15R receptacles or duplex 2000 mA USB charging receptacles. 4 Port Interface Modules with 2 power receptacles and 6 Port Interface Modules with 2, 3, or 4 power receptacles can be configured with optional cable bay or data access ports. Each Cable Bay occupies (2) port locations and allow for routing of separately specified A/V cables. Each Data Access Port occupies (1) port location and includes adapters for most field supplied RJ45 data jacks.

## Interface Module - Switching

Interface Modules for Switching applications have identical features as those listed for the Non-Switching version with the exception of Data Access Ports. In addition it includes a touch control and the option of VGA + Audio and/or HDMI cables. Specifications for such are listed separately.

## Touch Control – Table

The touch control consists of an anodized aluminum or powder coat painted cradle and illuminated polycarbonate lens. Contained within is a printed circuit control board with an RJ-12 connector for connection to the workware Processor via an RJ-12 data cable.

## Processor

Corded processor is listed for U.S. and Canadian safety standards through ETL Inc. by testing to UL and CSA standards. The processor is available with a combination of up to four (4) digital and/or analog video input cards and is powder coated black. Processors are 4-5/8" D x 13-3/8" H x 2-7/8" W and they are designed to be installed in a table base or otherwise hidden below the Interface Module. The units include a three (3) conductor 6' black 15-Amp cord with plug (NEMA 5-15P). Video input options are digital (HDMI) or analog (VGA). There are four (4) available video input slots. Processors come with one (1) digital splash screen override input port, one (1) digital video conference/auxiliary input port, one (1) digital alternate wireless input port, and one (1) analog wireless video port. There are four (4) digital output ports, two of which are independent, and two which are mirrors of the independent ports. The processor also includes two (2) 3.5mm audio output ports for left and right channel audio out, and one (1) analog audio input for use with the analog wireless video port. The Processor outputs digital video resolution of 1920 x 1080 (1080p). It is capable of accepting analog or digital video inputs in the following range: 640 x 480 - 1920 x 1080, 60Hz frequency only. The processor is a licensed HDCP device and is designed for use with the Touch Control on the Interface Module.

## Power Relay Cord

Power Relay Cord consists of a 5' long black 16/3 SJT cord, switch module, and RJ-12 data cable that connects the switch module to the workware Processor. Device is UL & CUL listed and RoHS compliant. Assembly is rated for 125 Volt 60 Hz applications with a maximum amperage of 10 Amps. Switch module incorporates an IEC male plug for connection to an IEC female plug device. Cord is attached to switch module on one end with an IEC female plug on the other end for connection to a monitor.

## Wireless Module

Wireless Modules are listed for U.S. and Canadian safety standards by Underwriters Laboratories, Inc. (UL & ULC). Wireless Module is 5.5" (140 mm) wide 4.6" (117 mm) deep and 1.1" (28 mm) high. Wireless module allows for single view, quad view, and video streaming while in the room or while remote, but connected to an existing network. The wireless module HDMI output port supports digital resolution of 1280 x 720 at 60Hz and the VGA output port supports analog resolution of 1024 x 768 at 60Hz. The speed of the wireless transmission depends on the network it is connected to but, on average it performs at 25 FPS and uses approximately 2.5Mbps of bandwidth. The Wireless Module can work independently by creating its own network or it can be part of a larger existing network. As its own network, it broadcasts using 802.11 b/g/N and supports encryption using WEP, WPA, or WPA2. The Wireless Module's broadcast is disabled when hardwired to an existing network. The wireless module includes one (1) HDMI output port, one (1) analog VGA output port, one (1) 3.5mm analog audio output port, and one (1) RJ-45 network port, two (2) antennae, one (1) power cord, one (1) 4GB USB Storage Drive with software, and mounting hardware.

# Technical Specifications

## workware view - Table Mounts

Table Mounts consist of an optional shroud, monitor mounting bracket and table mount trim. The shroud and table mount trim are constructed of 0.19" thick powder coat painted aluminum. The monitor mounting panel bracket is a welded frame made of 16 gauge powder coat painted steel. The optional camera mount is constructed of 7 gauge powder coat painted steel and attaches to monitor mounting bracket with fasteners. A variety of hardware components are included for the attachment of several brands and sizes of monitors using VESA Mounting Interface Standard.

## workware view - Wall Mounts (No Shroud)

Wall Mounts without a shroud consist of monitor mounting panel brackets, a monitor mounting panel, vertical mounting brackets, and attachment hardware. The monitor mounting brackets are constructed of 14 gauge powder coat painted steel plates formed with panel/wall engagement hooks and welded studs for plate attachment. The mounting panel is constructed of 14 gauge powder coat painted formed steel. The vertical brackets are constructed of 16 gauge powder coat painted steel and are formed to engage with mounting panel. A variety of hardware components are included for the attachment of several brands and sizes of monitors using VESA Mounting Interface Standard.

## workware view - Wall Mounts

Wall Mounts with a shroud consist of monitor mounting panel brackets, spacer, monitor shelf (shroud), light block, monitor mounting panel, vertical mounting brackets, and attachment hardware. The monitor mounting panel brackets are constructed of 14 gauge powder coat painted steel plates formed with panel/wall engagement hooks and welded studs for plate attachment. The spacer consists of a wood composite core with backer on both sides and an ABS edgeband along edges. The mounting shelf is formed of .025" thick aluminum and powder coat painted. The light block consists of two side light blocks, one upper light block, and an upper middle light block (Dual Monitor Mount only) made of 20 gauge powder coat painted steel that are fastened to each other with supplied hardware. The mounting panel is constructed of 14 gauge powder coat painted formed steel. The vertical brackets are constructed of 16 gauge powder coat painted steel and are formed to engage with mounting panel. A separately specified camera mount shelf is constructed of a powder coat painted 7-gauge steel plate welded to a powder coat painted 18-gauge formed bracket and attaches to spacer. A variety of hardware components are included for the attachment of several brands and sizes of monitors using VESA Mounting Interface Standard.

## HDMI Cable

HDMI cables are RoHS compliant and are available in lengths up to 50'. Cables are configured with HDMI type A male connectors on each end and support full 1080p resolution.

## VGA + Audio Cable

VGA + Audio Cables are UL and RoHS compliant and are available in lengths up to 25', cables without audio are available in 50' lengths. Cables are configured with HD15 Male connectors and 3.5mm stereo mini plugs on each end. The 3.5 mm audio plug cables extend 8" past VGA connector on one end and 20" on the other end of the VGA + Audio cable assembly. Cables are capable of supporting high resolution image up to QXGA 2048 x 1536. Cables are standard in black and have a Xtra-Flex jacket that is temperature rated for 80° C.

## Power Relay Adapter Cord Kit

Includes 6 foot black SJT 3 conductor (16/3) 300V 60$^0$C cord with 15 Amp male plug (NEMA 5-15P) and female IEC (C13) receptacle. Also included 2 foot black SJT 3 conductor (16/3) 300V 60$^0$C cord with one male IEC (C14) plug and two 15 Amp female receptacles (NEMA 5-15R). For use with TV monitors not equipped with IEC C13/C14 cords.

## Cable Base

Cable Base options include an 8" (203 mm) x 14" (356 mm) or 14" (356 mm) x 14" base. Base construction includes a 14-gauge steel frame with built -in brackets for cable management. The core of the Cable Base panels is available in Green core only, which consists of a 0.75" thick medium density fiberboard (MDF) that is finished with either 0.028" thick laminate or 0.020" thick veneer on both sides and a 0.039" thick edgeband on exposed edges. The cable base provides 2.5" of cord access along the top of the panels facing the depth of the table that can be field adjusted for base access. Panels that face the length of the table are removable for access to the base. The 8" x 14" cable base bottom panel provides a 3" x 8" cutout, and the 14" x 14" Cable Base provides an 8" x 8" cutout. Cable Bases have leveling glides with 1" height adjustment.

# Technical Specifications

## Cable Base Cable Retractor

Cable Retractor options include a 4 - 1/2" x 22" two cable chute or 7 - 1/2" x 22" four cable chute for either an 8" x 14" or 14" x 14" Cable Base. Chutes are constructed with 20 gauge steel and are electrocoat painted black. Mounting brackets are constructed of 16 gauge steel and are powder coat painted black. Each chute contains one 2.50" diameter x 1.40" wide powder coat painted steel cable weight.

## Cable Column

Cable Column is 28" (711 mm) high, 2" (51 mm) deep, and 4-1/2" (114 mm) wide. The Cable Column is 20-gauge steel with a 14-gauge floor mount bracket and a 12-gauge table mount bracket. Column and brackets are powdercoated painted with specified trim color. Cable Column provides 4.95 square inches (126 mm) of pathway for routing of cords and cables. Field removable tabs provide for cable and cord exiting along side of floor mount bracket and column.

## Processor Bracket

Processor Bracket is 13.50" (338mm) wide, 3.00" (76mm) high, and 11.00" (279mm) long. Processor bracket is constructed of painted 18-gauge formed steel and includes mounting hardware.

## Mobile Monitor Easel

A Mobile Monitor Easel consists of three primary components: a base, frame, and shroud. The base is constructed of 11 gauge powder coat painted steel base with a 14-gauge powder coat painted steel wrapper and includes four 3 - 1/8" (80mm) diameter casters. The frame is powder coat painted black and formed of welded 14-gauge steel with 16-gauge steel frame wings attached with machine screws. The shroud is constructed of two powder coat painted 0.179" thick aluminum assemblies that attach to frame with threaded studs that are welded to assemblies and connected with hex nuts. Monitor mounting brackets are constructed of formed 11-gauge powder coat painted steel that are secured to frame by formed hooks and spring pins. An internally routed 5' RJ-45 data cable and a rear mounted RJ-45 coupler are included. An internally mounted power tap is attached to frame with thumb screws and consists of four 125 V 15-Amp NEMA 5-15R receptacles with a 14/3 SJT cord with modular connector. Easel is powered by an internally mounted 14' retractable cord that consists of a modular connector on one end to feed power tap and a 15-Amp NEMA 5-15P plug with 12-Amp Circuit Breaker on the other for connection to building power. Non-Switching and Switching Easels also include a Utility Fascia and interface module lid constructed of molded ABS with decorative surface and a 14-gauge painted steel interface module mounting bracket. The Switching Easels also include a touch control. A variety of hardware components are included for the attachment of several brands and sizes of monitors using VESA Mounting Interface Standard.

## Touch Control - Easel

The touch control consists of a polycarbonate illuminated lens with a printed circuit control board. An RJ-12 connector is mounted to the printed circuit control board for connection to the workware Processor via an RJ-12 data cable.

## Tile for Mobile Monitor Easel

All tiles have metal engagement clips or brackets for attachment to the Mobile Monitor Easel. Tiles are available with the following surface options: Fabric Tiles have a 21-gauge (.033", 0.84mm) steel frame and a glass fiber-board that provides acoustic and tackable properties. Fabric is bonded to the frame and board with adhesive. Painted Tiles are constructed of 21-gauge (.033",0.84mm) steel and have a powder coat finish. Wood Tiles are constructed of wood composite board with wood veneer adhered to the front and a balancing veneer on the back. The edges are finished with .028" (.7mm) thick wood veneer that matches the face. Laminate Tiles are constructed of wood composite board with a laminate covering and balancing backer and are edgebanded with plastic 0.84" (1mm) thick edgeband.

## Shelf Tile for Mobile Monitor Easel

Shelf Mounting Plate is formed of 12 gauge powder coat painted steel and is attached to frame by four screws. Shelves consist of formed 0.179" thick powder coat painted aluminum which has eight threaded studs welded to bottom for attachment to mounting plate with shelf brackets. Shelf brackets are constructed of 14 gauge powder coat painted steel fastened to mounting plate with four screws.

## Mobile Monitor Easel Interface Module - Non Switching

Mobile Monitor Easel Interface Modules are listed for U.S. and Canadian safety standards by Underwriters Laboratories, Inc. (UL & ULC). The Interface Modules are black anodized and contain 6 configurable ports. The 6 configurable ports can consist of two, three, four, or six 125V 15-Amp NEMA 5-15R receptacles; two duplex 2000 mA USB Charging receptacles; a two port cable bay; or a two port data opening which includes blank covers and adapters for most field supplied data jacks. The module is fed with a 2' black 14/3 SJT cord with a modular power connector and mounting hardware is included.

# Technical Specifications

## Mobile Monitor Easel Interface Module - Switching

Mobile Monitor Easel Interface Modules are listed for U.S. and Canadian safety standards by Underwriters Laboratories, Inc. (UL & ULC). The Interface Modules are black anodized and contain 6 configurable ports. The 6 configurable ports can consist of either four 125V 15-Amp NEMA 5-15R receptacles with a two port cable bay or two 125 V 15-Amp NEMA 5-15R receptacles with two duplex 2000 mA USB Charging receptacles, and a two port cable bay. The cable bay can be populated with either two 10' HDMI cables, two 12' VGA + Audio cables, or one of each. The module is fed with a 2' black 14/3 SJT cord with a modular power connector and mounting hardware is included.

**This page intentionally left blank.**

# Finishes

## workware Preferred Finishes

### Standard Paint Grade A

| Code | Color |
|---|---|
| TR-PLS | Smooth Plaster* |

### Textured Paint Grade A

| Code | Color |
|---|---|
| TR-TY | Cement |
| TR-TG | Grout |
| TR-TF | Pitch |
| TR-TW | Plaster |

### Metallic Paint Grade B

| Code | Color |
|---|---|
| TR-MC | Champagne |
| TR-LE | Silver |

### Accent Paint Grade B

| Code | Color |
|---|---|
| TR-1C | Accent Blue |
| TR-1D | Accent Green |
| TR-1E | Accent Orange |
| TR-1F | Accent Red |

* Available on workware connect interface module.

## workware Legacy Finishes

### Standard Paint Grade A

| Code | Color |
|---|---|
| TR-R | Beige |
| TR-AK | Chalk |
| TR-K | Charcoal* |
| TR-J | Graphite* |
| TR-G | Gray Tone |
| TR-AA | Putty |
| TR-E | Smoke |

* Available on workware connect interface module.

### Laminate Solid Grade A

| Code | Color |
|---|---|
| H-WL | Linen |
| H-3P | Platinum |
| H-AA | Putty |

### Laminate Premium Wood Grain Grade B

| Code | Color |
|---|---|
| H-KA | Brazilwood |
| H-KG | Columbian Walnut |
| H-KC | New Age Oak |
| H-KD | River Cherry |
| H-KE | Sanara |
| H-KF | Williamsburg Cherry |

### Laminate Solid Grade A

| Code | Color |
|---|---|
| H-34 | Beige |
| H-AK | Chalk |
| H-8J | Charcoal |
| H-3J | Graphite |
| H-62 | Gray Tone |
| H-3E | Smoke |

### Laminate Wood Grain Grade A

| Code | Color |
|---|---|
| H-AM | Amber Cherry |
| H-AE | Maple |

**Alert:**
These materials are current, however they are being considered for future obsolescence due to low volume.

| | |
|---|---|
| H-DH | Barley Grain |
| H-DA | Oats Grain |
| H-DE | Wheat Grain |
| H-EK | Owl Nest |
| H-EC | Quail Nest |
| H-ED | Rhea Nest |
| H-EA | Robin Nest |
| H-22 | Grey Spex |
| H-21 | White Spex |

# Wood Finishes

**Preferred**

| Wood Group | Veneer Type | Variety | Cutting Technique | Surface | Matching Technique | Grain Direction | | Finish Name/ Color | Specification Number |
|---|---|---|---|---|---|---|---|---|---|
| | | | | | | Panel Face | Component Face | | |
| A | Double Cut | Obeche | Double Cut | Open Pore | N/A | Horizontal | Horizontal | Applegate | 2P-RL |
| | | | | | | | | Beachwood | WL-RL |
| | | | | | | | | Butternut | 2R-RL |
| | | | | | | | | Ebony | WJ-RE |
| | | | | | | | | Echo | 2N-RL |
| | | | | | | | | Melba | WE-RT |
| | | | | | | | | Sorrel | WF-RC |
| | | | | | | | | Wenge | WC-RW |

**Legacy**

| Wood Group | Veneer Type | Variety | Cutting Technique | Surface | Matching Technique | Grain Direction | | Finish Name/ Color | Specification Number |
|---|---|---|---|---|---|---|---|---|---|
| | | | | | | Panel Face | Component Face | | |
| B | Natural | Maple | Plain Sliced | Open Pore | Rotate on tops Slip match all other surfaces | Vertical | Vertical | Light Maple | VP-LM |
| | | | | | | | | Natural Maple | VP-N |
| | | | | | | | | Sand on Maple | VP-AD |
| | Natural | Cherry | Plain Sliced | Open Pore | Rotate on tops Slip match all other surfaces | Vertical | Vertical | Amber on Cherry | VC-CA1 |
| | | | | | | | | American on Cherry | VC-W23 |
| | | | | | | | | Caramel Cherry | VC-W33 |
| | | | | | | | | Heritage Cherry | VC-W30 |
| | | | | | | | | Pacific Cherry | VC-W32 |
| | Natural | Oak | Plain Sliced | Open Pore | Book Matched Rotate on tops Slip match all other surfaces | Vertical | Vertical | Natural on Oak | VJ-W05 |
| | Natural | Walnut | Plain Sliced | Open Pore | Rotate on tops Slip match all other surfaces | Vertical | Vertical | Espresso on Walnut | VR-W15 |
| | | | | | | | | Retro on Walnut | VR-W31 |
| | | | | | | | | Mahogany Satin on Walnut | VR-W21 |
| | | | | | | | | Naturally Walnut | VR-W12 |

**Forest Stewardship Council (FSC) Statement:**
In our continuing support of sustainable forestry and responsible purchasing, Haworth North America is offering FSC certified wood products at no up-charge. By providing FSC certified material, Haworth is supporting our client's green building goals and demonstrating our collective commitment to source materials more sustainably.

Haworth will provide to you the necessary FSC-certified paperwork with your shipment. For more information, FAQs, and a complete FSC product list (including product exceptions), go to the Library and search FSC.

**Alert:**
These materials are current, however they are being considered for future obsolescence due to low volume.
Crown on Cherry VC-W24
Cordovan on Walnut VR-W13

# Fabrics/Color Legend

- Fabrics listed on this page apply to all workware upholstered products.

- To obtain fabric samples contact your authorized Haworth dealer.

ⓓ = Directional fabric
ⓝ = Non-directional fabric

- Fabric and finish availability as well as technical information are subject to change; Refer to Surfaces.haworth.com for current information.

**Fabric Grade: A** ⓓ
**HIGHLANDS**
**100% Recycled Polyester (100% REPREVE®)**

| | |
|---|---|
| L6-AG | Glen |
| L6-AH | Heather |
| L6-AL | Loch |
| L6-AM | Moor |
| L6-AP | Peat |
| L6-AT | Thatch |

**Fabric Grade: A** ⓓ
**IOWA**
**52% Post Industrial Recycled Polyester/ 48% Post Consumer Recycled Polyester**

| | |
|---|---|
| FZ-10 | Badger |
| FZ-6 | Bixby |
| FZ-3 | Bobwhite |
| FZ-2 | Cedar Rock |
| FZ-11 | Clear Lake |
| FZ-13 | Emerson |
| FZ-7 | Gar |
| FZ-9 | Honeycreek |
| FZ-1 | Manawa |
| FZ-5 | Rice Lake |
| FZ-4 | Trappers Bay |
| FZ-12 | Walnut Woods |
| FZ-8 | Wapello |

**Fabric Grade: A** ⓓ
**POINT**
**100% Polyester**

| | |
|---|---|
| EE-AG | Compass |
| EE-AC | Decimal |
| EE-AF | Focal |
| EE-AD | Nib |
| EE-AA | Peak |
| EE-AE | Vertex |

**Fabric Grade: A** ⓓ
**STRIAE**
**42% Post Industrial Recycled Polyester/ 42% Post Consumer Recycled Polyester/ 16% Polyester (84% REPREVE®)**

| | |
|---|---|
| C1-AJ | Beam |
| C1-AM | Band |
| C1-AH | Element |
| C1-AF | Fillet |
| C1-AC | Moonlight |
| C1-AE | Ray |
| C1-AK | Ribbon |
| C1-AD | Straws |
| C1-AA | Stream |
| C1-AL | Trace |

**Fabric Grade: A** ⓓ
**TAILORED**
**100% Post Consumer Recycled Polyester**

| | |
|---|---|
| PY-AL | Alter |
| PY-BU | Buttons |
| PY-DR | Draper |
| PY-FC | French Chalk |
| PY-HE | Hem |
| PY-MA | Mannequin |
| PY-SE | Seam |
| PY-SH | Shears |
| PY-SU | Suit |
| PY-TH | Thread |
| PY-TR | Tradition |

**Fabric Grade: A** ⓓ
**TATAMI**
**100% Polyester**

| | |
|---|---|
| W5-1 | Agave |
| W5-2 | Coir |
| W5-3 | Geta |
| W5-4 | Hemp |
| W5-5 | Jute |
| W5-6 | Kayar |
| W5-7 | Kobe |
| W5-8 | Saffron |
| W5-9 | Sapporo |
| W5-10 | Sisal |
| W5-12 | Tabi |
| W5-11 | Tesori |

**Fabric Grade: A** ⓓ
**TUSCAN**
**65% Post Industrial Recycled Polyester/ 35% Post Consumer Recycled Polyester (35% REPREVE®)**

| | |
|---|---|
| TK-AR | Arno |
| TK-CA | Carrara |
| TK-DA | David |
| TK-ET | Etruscan |
| TK-FL | Florence |
| TK-LM | Limoncello |
| TK-MA | Masonry |
| TK-ME | Medici |
| TK-TR | Olive Tree |
| TK-PS | Pisa |
| TK-RM | Romanesque |
| TK-RU | Rustic |
| TK-SE | Siena |

**Fabric Grade: B** ⓓ
**CLASSIC**
**82% Recycled Polyester/ 18% Polyester (82% REPREVE®)**

| | |
|---|---|
| L5-AJ | Art |
| L5-AG | Car |
| L5-AF | Comedy |
| L5-AR | Dance |
| L5-AH | Design |
| L5-AD | Drama |
| L5-AT | Movie |
| L5-AA | Musical |
| L5-AC | Radio |
| L5-AS | Song |

**Fabric Grade: B** ⓓ
**HUE**
**62% Antimony Free Polyester/ 38% Virgin Polyester**

| | |
|---|---|
| 6-BK | Bark |
| 6-ED | Eddy |
| 6-FR | Froth |
| 6-GK | Ginko |
| 6-LT | Latte |
| 6-LF | Leaf |
| 6-LM | Lemon |
| 6-MG | Marigold |
| 6-MR | Marine |
| 6-PP | Poppy |
| 6-RD | Red |
| 6-SS | Seaside |
| 6-SP | Spring |
| 6-ST | Steam |
| 6-TQ | Turquoise |
| 6-WP | Wisp |

**Fabric Grade: B** ⓓ
**KIO**
**100% Recycled Polyester**

| | |
|---|---|
| ZR-6 | Bennett |
| ZR-8 | Cascade |
| ZR-7 | Crew |
| ZR-5 | FUD |
| ZR-3 | Jeanlin |
| ZR-1 | Jib |
| ZR-11 | Reeds Lake |
| ZR-13 | Regatta |
| ZR-10 | Sailor |
| ZR-2 | Sentra |
| ZR-12 | Smurf |
| ZR-9 | TSJ |
| ZR-4 | Yippi Kio |

**Haworth+**
For information on Haworth+ Alliance Program, please refer to:
Surfaces.haworth.com > Haworth+ Library

**Customer's Own Material (COM)**
For general Customer's Own Material information including: processes and forms, please refer to:
Surfaces.haworth.com > COM Section
For information on approved COM's, please refer to:
Surfaces.haworth.com > COM Library
For information on Haworth+ Alliance Program, please refer to:
Surfaces.haworth.com > Haworth+ Library

# Fabrics/Color Legend

**Fabric Grade: B**
**PUZZLER**
**48% Post Industrial Recycled Polyester/ 52% Post Consumer Recycled Polyester**

| | |
|---|---|
| 7L-C | Clue |
| 7L-CR | Cryptic |
| 7L-E | Enigma |
| 7L-I | Intrigue |
| 7L-M | Maze |
| 7L-R | Riddle |

**Fabric Grade: B** ⓓ
**RITZ**
**49% Post Industrial Recycled Polyester/ 51% Post Consumer Recycled Polyester (51% REPREVE®)**

| | |
|---|---|
| PV-BR | Bravo |
| PV-BT | Black Tie |
| PV-CA | Candle Light |
| PV-CH | Champagne |
| PV-CL | Classy |
| PV-CT | Class Act |
| PV-FR | Formal |
| PV-VA | Ovation |
| PV-WT | White Tie |

**Fabric Grade: B** ⓓ
**SHIMMER**
**100% Recycled Polyester**

| | |
|---|---|
| WS-5 | Cellophane |
| WS-8 | Copper |
| WS-13 | Dew |
| WS-14 | Diamond |
| WS-9 | Flaxen |
| WS-4 | Gems |
| WS-11 | Glass |
| WS-1 | Glitter |
| WS-10 | Mirage |
| WS-16 | Mirror |
| WS-2 | Moonlight |
| WS-6 | Puddle |
| WS-15 | Reflection |
| WS-12 | Stars |
| WS-3 | Water |
| WS-7 | Wet Grass |

**Fabric Grade: B** ⓓ
**TRAFFIC**
**100% Recycled Polyester**

| | |
|---|---|
| WZ-9 | Autobon |
| WZ-6 | Country Drive |
| WZ-7 | Freeway |
| WZ-5 | Gridlock |
| WZ-1 | Jam |
| WZ-3 | Merge |
| WZ-8 | Route 66 |
| WZ-4 | Ticket |
| WZ-2 | Yield |

**Fabric Grade: C** ⓓ
**BIRDS NEST**
**38% Post Industrial Recycled Polyester/ 20% Post Consumer Recycled Polyester/ 42% Recycled Polyester (20% REPREVE®)**

| | |
|---|---|
| PH-CA | Canary |
| PH-EA | Eagle |
| PH-EG | Egret |
| PH-FA | Falcon |
| PH-HE | Heron |
| PH-HU | Hummingbird |
| PH-MD | Morning Dove |
| PH-NU | Nuthatch |
| PH-WL | Owl |
| PH-RA | Raven |
| PH-SA | Sandpiper |
| PH-ST | Stork |
| PH-SW | Swan |

**Fabric Grade: C** ⓓ
**GEODE**
**34% Post Industrial Recycled Polyester/ 26% Post Consumer Recycled Polyester/ 40% Recycled Polyester (26% REPREVE®)**

| | |
|---|---|
| PR-BS | Bismuth |
| PR-CA | Calcite |
| PR-CT | Citrine |
| PR-CR | Crystal |
| PR-FL | Fluorite |
| PR-GA | Galena |
| PR-HL | Hollow |
| PR-MA | Malachite |
| PR-QU | Quartz |
| PR-WN | Wonder |

**ALERT:** These materials are current, however they are being considered for future obsolescence due to low volume.

**Fabric Grade: B** ⓓ
**LANDSCAPE**
**100% Recycled Polyester**

| | |
|---|---|
| C2-AD | Estate |
| C2-AH | Harvest |
| C2-AJ | Panorama |
| C2-AF | Parkland |
| C2-AC | Photograph |
| C2-AE | Seascape |
| C2-AA | Vista |

**Fabric Grade: A** ⓓ
**SAVOY**
**51% Virgin Polyester/ 49% Recycled Polyester**

| | |
|---|---|
| FJ-CC | Apache |
| FJ-AD | Balsam |
| FJ-AP | Bisque |
| FJ-AE | Blue Ridge |
| FJ-AA | Blue Willow |
| FJ-CA | Breaker |
| FJ-AR | Chamois |
| FJ-AK | Elephant |
| FJ-AL | Glacier |
| FJ-AX | Mango |
| FJ-AY | Maya |
| FJ-AW | Poplar |
| FJ-CD | Raisen |
| FJ-AT | Shallot |
| FJ-AM | Stainless |
| FJ-AF | Tempest |

# North American Terms of Sale

**These Terms of Sale are part of a quotation, bid response, or other sales document issued by Haworth, Inc., Haworth, Ltd. ("Haworth").**

**These Terms of Sale do not cover products manufactured in North America shipping to non-North American countries nor do they cover products manufactured in non-North American countries shipping to North America. For those terms of sale, please contact Haworth's Global Trade and Compliance Department at 616.393.3000 or through Haworth.com.**

## A. Ordering Information

Haworth sells its products on the terms set forth in these standard Terms of Sale:

ORDERS MUST BE SUBMITTED IN WRITING OR ELECTRONICALLY (Lynx) AS REPRESENTED BY A VALID PURCHASE ORDER, WHICH INCLUDES PRODUCT TOTAL.

An order is not binding upon Haworth until Haworth issues an order acknowledgment to the customer (the "Customer"), which will include price information and an anticipated delivery date.

### 1. Order Changes/Cancellations

For Specials, Customer's Own Material (C.O.M.), finish matches, custom colors, custom products, Master lock and key orders, and RUSH orders, no changes or cancellations are allowed 24 hours after order placement. All other products require approval for changes or cancellations. A change/cancellation fee may apply. Contact Order Services for applicable charges.

Ship-to addresses changed within five (5) business days of delivery will incur fees to cover administrative costs due to re-labeling of product and/or reconsignment fees with the carrier.

Order cancellations are complete annulments of orders. Order changes are the deletion of line items or a change in size, color, quantity, ship-to address, or scope of work. There is no penalty for additions; however, any change may cause the order or the line items affected to be rescheduled. Order changes involving additional product and services which increase the value must be accompanied by an amended Purchase Order or other document as agreed.

ALL CHANGES MUST BE IN WRITING, REGARDLESS OF THE (DOLLAR) VALUE. CHANGES ARE NOT BINDING UPON HAWORTH UNTIL HAWORTH ISSUES AN ACKNOWLEDGMENT OF THE CHANGE.

### 2. C.O.M. (Customer's Own Material)

A Customer who requests a fabric, surface or finish material (C.O.M.) not in Haworth's standard finish offering must first confirm approval of or request new approval for the C.O.M.

Haworth will determine feasibility of the material for manufacturability. For a description of the procedure to submit C.O.M. samples, contact Haworth's Order Services department. For testing information, see the C.O.M. section of the catalog, or call Haworth Order Services.

If Haworth agrees to use the C.O.M., (1) Haworth shall have no responsibility for the condition, quality, value, performance, physical properties, or any other aspect of the C.O.M.; and (2) Haworth shall have no liability for any damages, injuries, or losses to the Customer or to any third party that shall be caused by any C.O.M., and the Customer shall hold Haworth harmless for all such liability.

### 3. Valid/Complete Purchase Order

The following information is required in order to process an order with Haworth:

#### a. Customer Information

i. **Sold To:** Legal name, complete address (if Haworth is to bill the end user, provide end user Purchase Order made out to Haworth, Inc., Haworth, Ltd.) and phone and fax number.

ii. **Ship To:** Legal name and address.

iii. **Purchase Order Number:** From the party Haworth will be billing.

iv. **Authorized Signature:** All Purchase Orders must be signed by a duly authorized representative if a signature line is present. Electronically transmitted Purchase Orders will be accepted without a signature if dealer billed and the dealer has an electronic purchase payment agreement on file.

v. **Contact Name and Phone Number:** Person Haworth should contact with any questions regarding the order.

vi. **Shipping Contact:** Name and phone number of person to be contacted regarding shipping and delivery matters.

vii. **Tagging Instructions:** This information will appear on all documentation received from Haworth including: cartons, acknowledgments, and invoices.

viii. **Price Agreement or National Sales Agreement Number**

ix. **Product Total:** Net dollars.

x. **Installation, Design, Project Management, and/or Service Fees**

#### b. Product Information

i. **Quantity**

ii. **Product Numbers**

iii. **Colors**

iv. **Specials:** Specify special part number for new special products.

v. **Customer's Own Material:** Order entry code, manufacturer, pattern, and color.

vi. **Approval Drawings:** An authorized signature by a duly authorized representative is required for shop drawings when applicable.

vii. A deposit may be required for custom materials.

#### c. Order Confirmation

All orders will be acknowledged.

## B. Pricing Policies

### 1. Terms of Payment

Terms of payment and credit limits will be established based on financial information. Standard payment terms on open credit are net thirty (30) days from invoice date. Advance payments or other payment security may be required by Haworth. The account balance must be at or below the credit limit and current at all times (no past-due balances). Haworth reserves the right to delay or cancel any delivery to a Customer whose Haworth account balance is over the credit limit and/or past due. For walls and floors a deposit will be required.

### 2. Terms of Credit

Customer hereby authorizes Haworth to obtain such credit reports, financial information or other information as Haworth may request, including, without limitation, credit information from any financial institutions or others having a business relationship with the Customer. Customer hereby authorizes any credit references to answer Haworth's inquiries and provide such credit information and documentation as Haworth may request.

The Customer hereby releases and holds Haworth harmless for any inconvenience whatsoever, caused by any temporary or permanent withdrawal or restriction of credit privileges hereunder, or the enforcement of any of the provisions contained in this paragraph.

### 3. Past-Due Charges

Past-due balances will be increased by a maximum of 1.5% per month, or 18% annually, without forfeit of Haworth's right to immediate payment.

### 4. Applicable Prices

**The price of any product sold to Customer by Haworth will be based upon the North American Price List (Catalog).**

Prices and discounts are subject to change without notice or approval. In the event of an adjustment to pricing, National Sales Agreement (NSA) Customers will be notified in advance according to the terms of the NSA.

Applicable prices and currency exchange rates are those in effect at the time of the RECEIPT of an **ORDER**; Haworth reserves the right to use the published pricing effective at the time of shipment, if the requested delivery date is more than 120 days after the order receipt date.

# North American Terms of Sale

Haworth Flooring products are sold using the North American price list in US dollars. Currency exchange rates at the time of the transaction will be used to convert the USD amount into the alternate currency. Should the currency exchange rate between the USD and alternate currency change between a quote and the receipt of an order, the alternate currency amount will also change to equal the current, equivalent USD amount.

**5. C.O.M. (Customer's Own Material) Charges**

Refer to appropriate Customer's Own Material (C.O.M.) form for applicable surface material charges.

**6. Taxes**

Haworth prices do not include customs duty, sales, use, value added or similar taxes. Any federal, state/provincial or other taxes or assessments based upon the sale or delivery of products or services sold applicable to the customer at present or later imposed by federal, state/provincial or municipal agencies, shall be added and paid by the customer. Customer is responsible for all such taxes.

**NOTE:** For all countries a valid sales tax exemption certificate must be approved by and on file with Haworth prior to product shipment. Otherwise, sales tax will be due and payable to Haworth when such tax is invoiced to Customer.

**7. Services**

If, as a result of Customer request, the Haworth dealer or Haworth subsidiary provides planning/design services, storage, project management, special handling, set-up, installation and/or other services, the Customer will be charged at the local Haworth dealer/subsidiary's prevailing rates.

**8. Termination by Haworth**

Haworth may immediately terminate an order upon written notice in the event bankruptcy or insolvency proceedings are instituted by or against the Customer, or the Customer is adjudicated as bankrupt, becomes insolvent, makes an assignment for the benefit of creditors, or proposes or makes any arrangements for the liquidation of its debts, or a receiver or receiver and manager is appointed with respect to all or any part of the assets of the Customer.

## C. Shipping and Delivery

Haworth will have the right to determine the method of shipment and routing of product.

This section does not apply to any of Haworth's Flooring products. All Haworth Flooring products are sold freight collect.

If, for any reason, a delivery has to be made to an intermediate location (i.e. a location other than the "Ship To" location noted on the order or ultimate end user location), all handling and re-delivery costs incurred would be at the Customer's expense.

**1. U.S.A. - Contiguous**

All deliveries will be CPT (Carriage Paid To) (ICC Incoterms 2010) Haworth's manufacturing facilities or distribution centers. Freight charges will be prepaid by Haworth on all orders to locations within the continental United States. Customer bears all risk of loss or damage to the goods when they are placed on Haworth's means of transport.

**2. U.S.A. - Non-contiguous (Alaska, Hawaii and Puerto Rico)**

All deliveries will be CIF (Cost, Insurance and Freight) (ICC Incoterms 2010). Haworth's catalog prices include ocean freight and insurance to the port of the final destination. Haworth has the right to determine the carrier, method of shipment and routing. Haworth will contract with the insurer and provide minimal insurance coverage (CIF @ 110%) made payable to the Customer. Customer is responsible to obtain greater insurance if so desired.

Customer bears all risk of loss or damage to the goods when the goods are effectively at the disposal of the Customer on board the vessel at the named port of destination. Proof of delivery is a clean on board bill of lading. Customer will be responsible for all on-carriage from the receiving port to the final destination.

**3. Canada**

All deliveries will be DDP (Delivered Duty Paid) (ICC Incoterms 2010). Haworth's catalog prices include delivery to Customer's named place, not unloaded from any arriving means of transport. Customer bears all risk of loss or damage to the goods when they are delivered to the Customer's named facility not unloaded. Haworth will assume responsibility to file all freight claims with the carrier for any loss/damage which may occur while product is in transit, and will promptly repair or replace any damaged or lost product. Haworth requires the Customer to report all freight damage and/or loss to both the carrier and to Haworth.

**NOTE:** Under all delivery terms (U.S.A. and Canada), any additional expense resulting from Customer's request for expedited transportation, special services, packaging, handling, routing, and/or shipping method will be billed to Customer.

**4. Mexico**

All deliveries will be DAP (Delivered to Place) (ICC Incoterms 2010). Haworth's catalog prices include freight charges for normal surface transportation to a United States point of exportation within the 48 contiguous states. Haworth has the right to determine the carrier, method of shipment and routing.

Customer bears all risk of loss or damage to the goods when the goods are delivered to the named United States point of exportation. Haworth will provide customs clearance facilitation and arrangement of local delivery through an Authorized Dealer in Mexico, on a separately negotiated basis. Otherwise the Customer will be responsible for all customs clearance formalities and on-carriage from the United States point of exportation to the final destination in Mexico.

**5. Delivery Dates and Delay**

If Haworth cannot deliver products as scheduled due to causes beyond its reasonable control (such as casualty, labor disputes, or accident; inability to obtain necessary labor, material or transportation; or changes requested by the Customer), the delivery date will be extended to compensate for the delay as determined by Haworth.

**6. Delivery Shortages and Damage**

Product shortages and damage must be noted on delivery receipts at the time of delivery and reported to the carrier for correction.

Claims against Haworth for shortages, errors, or damage must be made within ten (10) days of the date of delivery or the Customer waives the right to make such a claim. Signed Bill of Ladings or Delivery Receipt must be sent in with claims. See the Haworth/Haworth Dealers Roles and Responsibilities document for further details.

**7. Storage**

Haworth may transfer product to storage at the Customer's risk and expense if the Customer is unable or unwilling to take delivery of product as originally scheduled. Upon such transfer to storage, the Customer assumes risk of loss. Haworth will invoice the Customer for storage fees and the Customer will make payments in accordance with Haworth's standard payment terms.

# North American Terms of Sale

## D. General Terms

### 1. Governing Law

For products purchased for delivery in the U.S. pursuant hereto, this Agreement shall be governed by and construed according to the laws of the State of Michigan. Where Products are purchased for delivery in Canada pursuant hereto, this Agreement shall be governed by and construed according to the laws of the Province of Alberta. In either case, the parties attorn to the exclusive jurisdiction of the courts of Michigan and Alberta, respectively for the purpose of hearing any disputes arising under this Agreement or with respect to any Products sold pursuant hereto, and agree that the provisions of the United Nations Convention on Contracts for the International Sale of Goods and any other provision or law which would have the effect of applying the laws of any jurisdiction other than Michigan or Alberta, as the case may be, shall be excluded.

### 2. Force Majeure

In the event that the performance of Customer or Haworth or its participating dealer assignee(s) would be prevented, restricted, interfered with or rendered commercially impracticable by reason of Force Majeure, then upon the giving of notice to the other parties, the party affected by the Force Majeure shall be excused from performing hereunder until the Force Majeure no longer prevents, restricts, interferes with, or renders such performance commercially impracticable.

"Force Majeure" shall mean: fire, explosion, breakdown of plant, epidemic, hailstorm, snow/ice storms en route, hurricane, tornado, cyclone, flood or power failure; war, revolution, civil or military disturbances, acts of public enemies, acts of terrorism, blockade or embargo; any law, order, proclamation, regulation, ordinance, demand or requirement of any applicable governmental authority or any subdivision, authority, or representative of any such government; labor difficulties, including without limitation, strikes, slowdowns, picketing or boycotts; or difficulties beyond Haworth's reasonable control in obtaining necessary raw materials, labor, fuels and electric power, components or facilities, and any other circumstances beyond the control of the party affected.

### 3. Delays by Customer

Where Haworth has not received adequate site dimensions, Product specifications, shipping information, installation particulars or other information required by Haworth to permit the efficient manufacture of any Products, or where site conditions are not in accordance with the Installation Requirements set forth, or are not otherwise suitable to permit effective and efficient installation, the manufacture and/or delivery of Products may be delayed, and such event shall constitute a delay by the Customer. When manufacture, delivery or installation is delayed by the Customer or at the Customer's request: (i) Haworth may, at its option, present the invoice for the full price of the Products to the Customer as then due and payable; (ii) the Customer shall pay to Haworth all reasonable storage, handling and other reasonable incidental expenses incurred by Haworth in connection with such delay; and (iii) the Customer shall bear all risk of loss or damage to the Products being held by Haworth for the Customer.

### 4. Use and Installation of Products

Haworth recommends that its products be installed by certified, qualified and approved installers according to Haworth's written installation procedures. The Customer agrees to use Haworth products properly; not to remove or alter safety devices, warnings, or operation instructions placed on products by Haworth, and to instruct employees as to the proper care and use of the products according to printed instructions.

### 5. Warranty

Haworth's standard North American Warranty will apply as appropriate. All product line warranty specifics are available in each catalog or upon request.

## E. Services

Service requests for design, installation, relocation, storage, etc. are handled by the local Haworth dealer on a separately negotiated basis. Contact the local Haworth dealer, affiliate or area sales office for more details.

### Scope of Work - Design

Customer acknowledges that the Products to be manufactured or procured by Haworth in connection with the order are or may be custom manufactured for the Customer and that Haworth may be required to perform extensive work in relation to the design and specification of such Products. Where Customer requests that Haworth create as-built drawings or make more than two material revisions to any particular Product design or specification, Customer agrees that Haworth shall be entitled to invoice Customer with respect to such additional work on the basis of Haworth's then prevailing rates for related design and specification services.

### Installation Requirements

Where installation services are to be provided by Haworth, its authorized dealer or subcontractor, a document will be provided setting forth the scope of installation work to be performed (the "Scope of Work") and the price to be charged therefore. Unless otherwise specified in the scope of work, Haworth's installation services are limited to products sold by Haworth with the exception of lighting, under floor electrical and data.

### General Conditions

(a) Sufficient time shall be allocated by the Customer following delivery of Products and prior to Customer's occupation of the premises to allow the installation of all Products during conventional working hours, Monday through Friday, 7:30 a.m. to 4:30 p.m. Where sufficient time is not allocated and Haworth is required or requested to perform installation work outside of such times, overtime charges shall be charged at Haworth's then prevailing rates. (b) Haworth shall be given free and exclusive access to; (i) a loading dock within 150' of the freight elevator or hoist, which loading dock shall be of sufficient size to enable full-size tractor-trailer deliveries to the premises (where required by Haworth); (ii) a freight elevator or hoist of sufficient size and capacity to allow the efficient movement of the Products; (iii) an unobstructed and safe pathway to the area where Products are to be stored or staged; (iv) a secure storage / staging area; (v) convenient trash facilities; (vi) adequate lighting; (vii) a work site that complies with applicable health and safety legislation. Where such areas and facilities are not available, Haworth shall be entitled to bill Customer for all amounts incurred by Haworth for double-handling, product movement, lifting, hoisting, trash removal and any other resulting charges. (c) The installation site shall be free and clear of existing furniture, debris, or other obstructions (including construction in progress) and shall otherwise be in the reasonable opinion of Haworth ready for installation of the Products. Any building where Products are to be installed shall be fully closed in, dry and protected from the natural elements, with temperatures between 40°F and 90°F (4°C and 32°C) and relative humidity not to exceed 70% at all times including receipt of products, during and after installation and shall be adequately heated and/or air-conditioned. Where unusual site conditions exist which impede or prevent the normal installation of any Products, applicable extra charges shall apply at prevailing rates. (d) Haworth's installation pricing is based upon the installation occurring as one continuous delivery and installation project. Phased installation pricing shall be provided by Haworth on a case by case basis. (e) Electrical hardwiring, plumbing and mechanical work is not included and shall be the responsibility of the Customer. (f) Except as may be otherwise specifically indicated, installation pricing does not apply to projects where union labor is required. Where Haworth has provided installation pricing on the basis that non-union labor be utilized, and where Haworth is required to use union labor or it otherwise becomes impractical to use non-union labor, or where Haworth is required by law to use prevailing wages, Haworth shall be entitled to charge the Customer for any cost differential between the anticipated cost of non-union labor and the actual cost of utilizing union or prevailing wage labor. (g) Haworth shall not be responsible for obtaining permits.

# North American Terms of Sale

**Project / Site Conditions**

Lateral load bracing is not included in the scope of Haworth's work and shall not be performed by Haworth. In areas where flooring Products are to be installed by Haworth overhead construction must be completed prior to the commencement of such work to avoid damage to the panels and finishes. The existing subfloor must be smooth, mopped clean, free of moisture, dust, dirt and debris. Once installed, the access floor must be maintained in the same manner. The subfloor must have a maximum vertical elevation deviation of 0.375″ (10mm) over a horizontal span of 10′-0″ (3m), and without discontinuities in floor slope. For greater certainty, the scope of Haworth's installation work in such areas shall not be deemed to include any work required to level such subfloor, remove protrusions, remove pre-existing floor coverings or adhesives, or any other work which is required to remedy any conditions which may impede the efficient installation of flooring. Except as may be otherwise specifically indicated in the order, installation pricing for flooring Products and the Scope of Work in relation thereto shall not include any work required to remove and replace floor panels following their initial installation to provide tradespersons or others with access to the underpanel cable management cavity. In areas where movable walls are to be installed, all flooring (including carpeting) and ceiling components (including dropped ceiling grid components) shall be fully complete and ready for the installation of the movable wall products. Further, the existing floor (or other surface on which the movable wall panels are to be installed) shall have a maximum vertical deviation of 1.25″ (30mm) and the dropped ceiling grid shall have a maximum vertical deviation of 0.375″ (10mm) from the specifications to which such movable wall panels were designed and manufactured (collectively the "Permitted Tolerances"), and shall otherwise comply with any site condition assumptions made known to Haworth prior to the manufacture of such Products (the "Site Assumptions"). Where the Permitted Tolerances or Site Assumptions are not strictly adhered to or met, additional charges may be incurred in connection with site remediation and/or the modification or remanufacture of affected movable wall products, together with all resulting shipping and labor charges at Haworth's then prevailing rates for such Products and services.

**Installation Change Orders**

Where Customer requests work to be performed or materials to be provided which are not contemplated in the Scope of Work, or Customer otherwise requests Products or services not contemplated in the order (collectively "Extras"), prior to providing such Extras Haworth reserves the right to require the Customer to provide and sign a written Purchase Order or Change Order acceptable to Haworth describing the Extras and the amounts to be charged therefore, and the Customer agrees to pay such charges.

**Entire Agreement**

The order and this Agreement (including applicable Schedules) constitute the sole agreement between the parties and supercede any prior understanding or written or oral agreements between the parties (excluding National Sales Agreements). No waiver of any of the provisions of these Standard Terms and Conditions shall be binding on Haworth unless expressly agreed in writing.

***Revision Date: June 1, 2015***

# Index

Products are listed alphabetically in this index by alpha-numeric prefix/suffix codes.


| Product Code | Product Description | Page |
|---|---|---|
| Double-Cut Veneer | workware view – Tile for Mobile Monitor Easel – No Interface Module | 40 |
| Double-Cut Veneer | workware view – Tile for Mobile Monitor Easel – Switching or Non-Switching Interface Module | 41 |
| EUAW | workware Accessories – Wire Manager – Horizontal | 37 |
| EUDX-3000-B | Electrical Components – Cables | 33 |
| EUDX-3000-B | Electrical Components – Retrofit USB Charging Cable | 33 |
| EUDX-H000-B | Electrical Components – Cables | 33 |
| EUDX-V000-B | Electrical Components – Cables | 33 |
| EWCA | workware connect – Interface Modules – Non- Switching 4-Port and 6-Port | 9 |
| EWCA | workware connect – Interface Modules – Switching 4-Port and 6-Port | 25 |
| EWCB | workware connect – Interface Modules – Non- Switching 4-Port and 6-Port | 9 |
| EWCB | workware connect – Interface Modules – Switching 4-Port and 6-Port | 25 |
| EWCE-NNNNBNPW | workware connect – Interface Module for Easel – Non-Switching 6-Port | 44 |
| EWCG-3A1D-NPSCBNCW | workware connect – Interface Module — Non-Switching – 4-Port and 6-Port Narrow – Hardwire | 21 |
| EWCG-3A1D-NPSCBNPW | workware connect – Interface Module — Non-Switching – 4-Port and 6-Port Narrow – Corded | 13 |
| EWCG-3A1D-NPSCBNSF | workware connect – Interface Module — Non-Switching – 4-Port and 6-Port Narrow — Spiral Corded – Height Adjustable | 16 |
| EWCG-3A1D-NPSCBNSL | workware connect – Interface Module — Non-Switching – 4-Port and 6-Port Narrow — Corded – Height Adjustable | 18 |
| EWCG-3A2E-NPSCBNPW | workware connect – Interface Module — Non-Switching – 4-Port and 6-Port Narrow – Corded | 13 |
| EWCG-3A3E-NPSCBNCW | workware connect – Interface Module — Non-Switching – 4-Port and 6-Port Narrow – Hardwire | 21 |
| EWCG-3A3E-NPSCBNSF | workware connect – Interface Module — Non-Switching – 4-Port and 6-Port Narrow — Spiral Corded – Height Adjustable | 16 |
| EWCG-3A3E-NPSCBNSL | workware connect – Interface Module — Non-Switching – 4-Port and 6-Port Narrow — Corded – Height Adjustable | 18 |
| EWCG-4RNN-NPSCBNPW | workware connect – Interface Module — Non-Switching – 4-Port and 6-Port Narrow – Corded | 13 |
| EWCG-4RNN-NPSCBNSF | workware connect – Interface Module — Non-Switching – 4-Port and 6-Port Narrow — Spiral Corded – Height Adjustable | 16 |
| EWCG-4RNN-NPSCBNSL | workware connect – Interface Module — Non-Switching – 4-Port and 6-Port Narrow — Corded – Height Adjustable | 18 |
| EWCW-H300 | workware Wireless – workware Wireless Base | 28 |
| EWCW-H600 | workware Wireless – workware Wireless Pro | 28 |
| EWCX-0101-PA | workware Accessories – Power Relay Adapter Cord | 34 |
| EWCX-0701-PR | workware Accessories – Power Relay Data Cable | 32 |
| EWCX-5001-V | workware Accessories – HDMI or VGA Cable | 32 |
| EWCX-A3 | workware Accessories – Audio Cable – 3.5mm | 32 |
| EWCX-BRPR | workware Accessories – Processor Bracket | 37 |
| EWCX-BRWM-2A | workware Accessories – Cable Base Cable Retractor | 35 |
| EWCX-BRWM-4A | workware Accessories – Cable Base Cable Retractor | 35 |
| EWCX-H | workware Accessories – HDMI or VGA Cable | 32 |
| EWCX-V | workware Accessories – HDMI or VGA Cable | 32 |
| EWVC-0506-T | workware Accessories – Camera Mount Shelf | 34 |
| EWVC-0506-W | workware Accessories – Camera Mount Shelf | 34 |
| EWVD-DASS-PP | workware view – Structural Walls – Proud Mount – Dual Monitor With Shroud | 31 |
| EWVD-SASD-PP | workware view – Structural Walls – Proud Mount – Single Monitor With Shroud | 31 |
| EWVD-SASS-PP | workware view – Structural Walls – Proud Mount – Single Monitor With Shroud | 31 |
| EWVD-SNNN-PN | workware view – Structural Walls – Proud Mount – Single Monitor With Shroud | 31 |
| EWVE-DASS-P | workware view – Enclose® Walls – Proud Mount – Dual Monitor With Shroud | 30 |
| EWVE-SASD-PP | workware view – Enclose® Walls – Proud Mount – Single Monitor With Shroud | 30 |
| EWVE-SASS-PP | workware view – Enclose® Walls – Proud Mount – Single Monitor With Shroud | 30 |
| EWVE-SNNN-PN | workware view – Enclose® Walls – Proud Mount – Single Monitor With Shroud | 30 |
| EWVM-SB4P-N | workware view – Mobile Monitor Easel – No Interface Module | 38 |
| EWVM-SB4P-P | workware view – Mobile Monitor Easel – For Non-Switching Interface Module | 39 |
| EWVM-SB7P-N | workware view – Mobile Monitor Easel – No Interface Module | 38 |
| EWVM-SC4P-N | workware view – Mobile Monitor Easel – No Interface Module | 38 |
| EWVM-SC4P-P | workware view – Mobile Monitor Easel – For Non-Switching Interface Module | 39 |
| EWVT-DCND-P | workware view – Table Mount With Shroud Dual Monitor | 29 |
| EWVT-DCSD-P | workware view – Table Mount With Shroud Dual Monitor | 29 |

# Index


| Product Code | Product Description | Page |
|---|---|---|
| EWVT-SAND-P | workware view – Table Mount With Shroud | 29 |
| EWVT-SASD-P | workware view – Table Mount With Shroud | 29 |
| EWVX-PB4P-NN | workware view – Tile for Mobile Monitor Easel – No Interface Module | 40 |
| EWVX-PB4P-PN | workware view – Tile for Mobile Monitor Easel – Switching or Non-Switching Interface Module | 41 |
| EWVX-SB4P-N2 | workware view – Shelf Tile for Mobile Monitor Easel – No Interface Module | 42 |
| EWVX-SB4P-P2 | workware view – Shelf Tile for Mobile Monitor Easel – For Switching or Non-Switching Interface Module | 43 |
| EWVX-SB7P-N1 | workware view – Shelf Tile for Mobile Monitor Easel – No Interface Module | 42 |
| EWVX-SB7P-P1 | workware view – Shelf Tile for Mobile Monitor Easel – For Switching or Non-Switching Interface Module | 43 |
| EWVX-SC4P-N2 | workware view – Shelf Tile for Mobile Monitor Easel – No Interface Module | 42 |
| EWVX-SC4P-P2 | workware view – Shelf Tile for Mobile Monitor Easel – For Switching or Non-Switching Interface Module | 43 |
| SPLT-2866 | workware view – Mobile Monitor Easel – For Non-Switching Interface Module | 39 |
| TA01-0217 | workware Accessories – Cable Column | 36 |
| TA01-0814 | workware Accessories – Cable Base | 35 |
| TA01-1414 | workware Accessories – Cable Base | 35 |

# PRODUCT NON-OBSOLESCENCE AND WARRANTY POLICY

This North American Haworth Product Non-Obsolescence and Warranty Policy (the "policy") applies to products manufactured after May 8, 2015. For products manufactured before this date please refer to the policy published in the NA Price List when purchased or contact your local Authorized Haworth Dealer. All Haworth products are warranted for 24 hour / 7 day use over the length of the Applicable Warranty Period as set forth below.

Haworth, Inc. or Haworth, Ltd., (each called "Haworth") will make a good faith effort to maintain product compatibility within our various generations of integrated product platforms to provide our customers with spaces that adapt to change. Under our non-obsolescence policy, we commit to provide our customers with products of comparable function or operational characteristics for a term equal to the Applicable Warranty Period. Haworth fabrics and finishes must be updated periodically to maintain the market appeal of our products and respond to the demands and changing preferences of our customers. As a result, we or the manufacturer may discontinue some fabrics and finishes before expiration of the Applicable Warranty Period.

If a new product purchased or leased from Haworth or from an Authorized Haworth Dealer proves to be defective (as defined below) while the product is still in the possession of the initial purchaser or lessee and if they, within the Applicable Warranty Period, inform Haworth of the defect by contacting the local Authorized Haworth Dealer, then, except as provided below, Haworth will, at Haworth's option, either repair or replace the product, at Haworth's expense, or refund the purchase price of the product. Except as provided below, a product shall be considered "defective" if Haworth finds that it is defective in material or workmanship and if the defect materially impairs the use of the product to the purchaser or lessee. The applicable warranty period begins on the day the product is manufactured. If a product that the purchaser or lessee references in a notice of defect was not installed by a Haworth Certified installer and/or reconfigured by a Haworth-trained installer, then the product may not be considered defective and Haworth will not be obligated to repair or replace it or to refund its price.

## PRODUCTS / APPLICABLE WARRANTY PERIOD

### LIFETIME

All Haworth products are warranted for lifetime *except products, components and materials described below:*

### TWELVE YEARS

All Haworth NA manufactured seating is warranted for 24/7 multiple shift use by persons up to 325 lbs and includes the framework, mechanisms, seating foam, seat & back mesh and seating glides & casters.

All wood or wood framed products.

### TEN YEARS

All wall products (excluding soft close door mechanisms warranted for Two Years), electrical components (excluding Power Base™ AI, USB receptacles and workware products), electrical accessories, fixed task lighting (excluding LED lighting), adjustable keyboard pads, monitor arms and products that are at any time used in a classroom or educational environment (other than administration areas) *except as limited or described below:*

### FIVE YEARS

Fabric scrims and fabrics rated Heavy Duty (A) under the Association of Contract Textiles Guidelines, leather, vertical use markerboard laminates, user-adjustable worksurface mechanisms, gel arm caps, thermofused laminates, slow close mechanisms, LED lighting, Power Base™ receptacles with USB charging outlets, electronic ballasts used in task lighting, horizontal glass or thermoplastic table assemblies and Systems Accessories.

### THREE YEARS

Power Base AI Electrical products, workware™ products, Hoop products (excludes any warranty for surface damage such as scratches, dents or abrasions), plastic ultraviolet light color fastness and fabrics rated General Contract (a) under the Association of Contract Textiles Guidelines.

### ONE TO FIVE YEARS*

Products that are manufactured outside North America and sold into the North American market.

### ONE YEAR

Horizontal use markerboard laminate, Openest™ Plume Screens, soft palm rest, mouse pad insert and translucent edging.

Haworth "Specials" products that involve simple modification of a standard based product will be warranted for the same period as the standard catalog product it is based on. Haworth "Specials" products that deviate from standard catalog product in the form of features, construction, function, or aesthetic will be warranted for 1 year.

All software is without warranty of any kind, either expressed or implied.

All service parts are warranted for two years or the remaining balance of the assembly's original warranty period, whichever is longer.

*The Applicable Warranty Period for each such product is specified in Haworth's price list for the product.

A product will not be considered to be defective, and Haworth will not repair, or replace it or refund its price if the product (1) is a consumable product, such as a lamp; (2) is "Customer's Own Material" (i.e. material specified by the purchaser or lessee that is not a standard Haworth product offering, such as Haworth Alliance fabrics); (3) is not installed and used as recommended in Haworth's written specification, installation, care, maintenance and user guides; (4) has been otherwise misused or suffered abusive damage or (5) is a product that is manufactured by a third-party supplier from whom Haworth purchases it for resale without incorporating it into Haworth product (in which case Haworth will assign to the purchaser or lessee any warranty that the manufacturer provides), unless otherwise specified by Haworth in writing. At all times the Covered Product must have been located in a building that is (i) dry, fully closed-in and protected from the natural elements, and (ii) adequately heated, ventilated and air conditioned in order to maintain an internal temperature between 40°F and 90°F (4°C and 32°C) and relative humidity levels between 25% and 55%.

A defect in material or workmanship does not include damage to a product, or failure of a product to operate or perform properly or to maintain appearance, caused by (a) normal wear and tear; (b) an Act of God or transportation; (c) a product alteration made without Haworth's express written authorization; (d) the natural variation of color, grain or texture found in wood and leather; (e) the natural aging found in materials such as wood, fabric and leather which results in colors shifting during use; (f) dye lot variations in fabric, leather or wall covering (g) the natural patina of leather during use; (h) "puddling" of leather or faux leather; or (i) reverse crocking of dyes from clothing onto our seating materials.

EXCEPT AS STATED ABOVE, HAWORTH DOES NOT MAKE A WARRANTY AS TO ANY PRODUCT AND, IN PARTICULAR, DOES NOT MAKE A WARRANTY OF MERCHANTABILITY OR OF FITNESS FOR A PARTICULAR PURPOSE. Product repair or replacement or refund of the price, at Haworth's option, in accordance with this Policy, is the purchaser's or lessee's exclusive remedy for a product defect. Haworth shall not have tort liability with respect to a product, and Haworth shall not be liable for any consequential, economic, indirect, special, punitive or incidental damages arising from a product defect. Haworth shall not be liable for repair or product placement due to improper installation or any defect in materials used for installation which are not manufactured, sold or supplied by Haworth.

**Released May 8, 2015**

HAWORTH®

For more information call 800.344.2600 or 616.393.3000.

Haworth is a registered trademark of Haworth, Inc.
©Haworth, Inc. 2018 4.18 Item #6063

haworth.com | haworth-europe.com | haworth-asia.com