Allsteel®

Further™ System

SPECIFICATION AND PRICE LIST 2015
prices effective March 29

PDF UPDATED
January 25, 2016

Worksurfaces
Hubs, Beams, and Supports
Electrical & Data
Collaborative Hub
Screens
Storage
Accessories

PAINT FINISHES

C CORE COLORS

Black* P27
Brownstone* P7D
Bungalow P7C
Carob P52
Flint P02
Fossil P28
Loft P7B
Muslin P4J
Parchment P93

S SELECT COLORS

Brilliant White* PQ8
Champagne Metallic PR5
Gunmetal Metallic PR3
Platinum Metallic PR2
Silver* PR6

A ACCENT COLORS

Flame P7G
Ocean P7H
Sprout P7F
Tangelo P7E

*Face plate on Hub Power Module available only in these 4 colors, other colors available as a special.

PAINT COLOR INDICATORS

Pages in this pricer reference the following symbols:

C CORE PAINTED METAL COLORS
S SELECT PAINTED METAL COLORS
A ACCENT PAINTED METAL COLORS

Metallic paints, due to varying reflectance, may appear to have less visual color consistency than other paint finishes, even when L/A/B values are exactly the same. (L/A/B — measurable aspects of color — values are maintained within a specified range, to ensure consistent appearance of paint colors.)

ELECTRICAL AND DATA COMPONENTS

Black E4
Brownstone ..... EY
Bungalow ..... EX
Flint E9
Loft ..... EV
Muslin ..... EU
Silver ..... ES
White ..... EW

Recommended Coordinate Colors:
Brilliant White use White EW
Carob use Black E4
Champagne Metallic use Muslin EU
Fossil use Flint E9
Gunmetal Metallic use Brownstone EY
Parchment use Muslin EU
Platinum Metallic use Loft EV

LAMINATES

GRADE L1

CORE

Ash LT3B
Brownstone* LM13
Bungalow* LM12
Camelstone LT6A
Canyon Zephyr LT5B
Desert Zephyr LT5A
Flint* LM16
Frosty White* LM14
Grey Mesh LT8A
Greystone TM65
Loft* LM11
Muslin* LM15
Parchment TM20
Pewter Mesh LT8C
Sheer Mesh LT8B
Silver Mesh LT8D
White Tigris LT2A
Whitestone TM33

WOODGRAIN

Natural Maple* ..... LWD
Shaker Cherry* LW7C

GRADE L2

Amber Cherry* ..... LWAC
Beigewood* ..... LWBE
Brazilwood* ..... LWBR
Columbian Walnut* ..... LWZ

GRADE L3 (Textured)

Cafelle* ..... LWC
Charcoal Walnut* ..... LWCW
Natural Walnut* ..... LWNW

*Storage available in these 15 laminates.

LAMINATE EDGE COLORS

Amber Cherry* ..... DA
Beigewood* ..... DE
Black E4
Brazilwood* ..... DB
Brownstone* ..... EY
Bungalow* ..... EX
Cafelle* ..... DG
Carob E8
Charcoal Walnut* ..... DC
Columbian Walnut* ..... DZ
Flint* E9
Fossil ..... EH
Loft* ..... EV
Muslin* ..... EU
Natural Maple* ..... DD
Natural Walnut* ..... DN
Parchment ..... EN
Platinum Metallic ..... EP
Shaker Cherry* ..... DF
White* ..... EW

*Storage available in these 15 edge colors.

NOTE: Refer to individual product pages for upcharges.

FSC Certified Wood at Allsteel

See page 93 for more information.

- Software support packages furnished to the customer, either by Allsteel® or by another source, which support the sale of Allsteel products are superseded by printed price lists.
- Prices are subject to change without notice. All orders are subject to prices in effect at the time of order.
- Please refer to your Allsteel Dealer Sales and Discount Policies for order placement information, terms and conditions.
- Ordering information appears at the bottom of each product page complete with examples on how to specify. Fabric and finish pages are referenced at the bottom of product pages.

This publication is available as a downloadable PDF on Allsteel websites.

Questions or Comments?

Please call us at: **888-ALLSTEEL**
888-255-7833

New, Revised, and Discontinued Products 4
Warranty, COM, and Specials Policies 5-9
Introduction to Further 10
Typicals 11-12
Statement of Line 13

WORKSURFACES AND SUPPORTS

Working with Worksurfaces and Supports 14-27
Worksurface Brackets and Support Channel 28
Rectangular Worksurfaces 29
Trapezoid and Runoff Worksurfaces 30-32
Symmetrical Trapezoid Worksurfaces 33
Worksurface Supports — Hubs, Beams, and Supports 34-37

ELECTRICAL & DATA

Working with Electrical and Data 38-53
Electrical In-Feeds, Power Kits, and Components 54-56
Beam Mounted Wire Manager 57
Below Beam Electrical Harness 58-59

COLLABORATIVE HUB

Working with Collaborative Hub 60-61
Collaborative Hub Components 62-63

SCREENS

Working with Screens 64-65
Fabric Screens and Modesty Panels 66-67
Glass Screens 68
User Movable and Lateral Screens 69

STORAGE — Laminate with Metal

Working with Storage 70-73
Horizontal Storage and Worksurface Stanchions 74
Dual Sided Horizontal Storage and Beam Mounted Stanchions 75
Pedestals and Credenzas 76
Storage Towers 77

EXTENSIONS

Introduction 78
Working with Organization Tools 79-81
Organization Tools 82-83
Working with Ergonomic Accessories 84-85
Ergonomic Accessories 86
Working with Illumination 88
Illumination 89

APPENDIX & INDEX

Locking Specifications and Appendix 90-95
Index 96-97
Seating Upholstery and Panel Fabrics ..... 98-Inside Back Cover

© 2015, Allsteel Inc. Allsteel is a registered trademark.

Further™

NEW PRODUCTS

Further

120° Worksurfaces 1/15/2016

78"-102" Electrical power harnesses

Altitude® Tables — see Seating and Tables Price List

New 2- and 3-stage Height-adjustable Tables including corner coves 7/1/2015

NEW FABRIC GRADES / SHORTENED CODES

Allsteel fabric grades changed and some codes were shortened in order to standardize across HNI furniture companies:

- Panel fabrics grades went from numeric to alpha: Grade 1 is now Grade A, Grade 2 is Grade B, etc.
- Seating upholsteries grades went from alpha to numeric: Grade A is now Grade 1, Grade B is Grade 2, etc.
- Four upholsteries moved up from Grade A to Grade 2: Appoint Seating, Moguls, Sockhop, and Whisper Vinyl.
- Upholstery codes were shortened for: Centurion CTU to CU, Whisper WSP to WP, Silvertex STX to SX, Brisa BRS to RS.
- All changes above effective August 1, 2015 and are reflected throughout this price book.

NEW MODEL NUMBERS

Select models have been reassigned new model numbers with an "A" prefix effective 8/3/2014. There is no physical change to the model.

DISCONTINUED PRODUCTS

Angled "J" Worksurfaces – Discontinued 12/31/2015

DISCONTINUED FINISHES

Laminates — Charbrown Mesh LT8F, Misted Zephyr LT5D, Taupe Mesh LT8E, Twilight Zephyr LT5E all discontinued 12/31/2014

Data Faceplate Color — Almond E3 discontinued 11/23/2015

DISCONTINUED FABRICS

Chord — all colorways 9/28/2014

Hotspot — discontinued on Systems 4/29/2015

Imprint, Jet Set, Stagger — all colorways 7/3/2016

Celestial — all colorways 12/31/2016

Lifetime Warranty

Allsteel Inc. warrants its products to be free from defects in material and workmanship for as long as the original purchaser owns them, except as set forth below.

Allsteel shall repair or replace with comparable product (at Allsteel's discretion), free of charge, any Allsteel product or component manufactured after March 16, 2015, that fails under normal commercial office use.

This warranty is subject to the following provisions:

Some natural variations occurring in wood, leather, or other natural materials are inherent to their character and not considered defects. Allsteel does not warrant the colorfastness or matching of colors, grains, or textures of these materials. Additionally, a Customer's Own Material (COM) selected by, and used at the request of, a user is not warranted.

The materials and components listed below are covered according to the following schedule from the date of sale:

- Wood products and electrical components (lamps and ballasts are not covered), seating controls, pneumatic cylinders, glides, casters and polymer-based components, and foam — 12 years
- Wood seating, stacking chairs, Sum® AutoFit® technology, and laminates — 10 years
- User-adjustable worksurface mechanisms, tablet arm mechanisms, interior wood-framed seating and lounge products, occasional tables, Mimeo™ 3D knit, Scout® mesh, panel and seating upholstery fabrics, and other covering materials — 5 years
- Marker board surfaces and upholstery on Gather™ products — 3 years
- #19®, Access™, Acuity®, Clarity®, Inspire®, Relate®, Scout, Seek®, Sum, and Trooper® asynchronous and synchro-tilt models are warranted for multiple shifts and users up to 300 lbs. Mimeo is warranted for multiple shifts and users up to 350 lbs. All other Allsteel chairs and components are warranted for single-shift, 40-hour workweek usage.
- #19 chair, including components and material, is warranted for as long as the original purchaser owns the chair.
- #19, Access, Acuity, Clarity, Relate, and Seek mesh/carriers and Mimeo carrier are considered structural chair components and as such are warranted for as long as the original purchaser owns the chair.
- Undercabinet LED light — fixture warranted for 3 years; power supply warranted for 1 year
- Link™ LED light — 5 years
- Wand™ LED Light — fixture warranted for 5 years; power supply warranted for 3 years
- Beyond™ Movable Walls — 10 years; moving parts such as door hardware and door mechanisms — 5 years; customer's own hardware — supplier warranty

This warranty does not apply to:

- Normal wear and tear over the course of ownership, including fabric puddling
- Damage from sharp objects (e.g., writing utensils, heeled shoes, scissors, jewelry, keys)
- Modifications or attachments to the product not approved by Allsteel
- Products not installed, used, or maintained in accordance with product instructions and warnings
- Products used for rental purposes
- Damage caused by the carrier in-transit, which is handled under separate terms
- Third-party products. Allsteel, to the extent possible, will pass through to the original purchaser (and process claims under) any warranty provided by manufacturers of undercabinet lighting, ergonomic work tools, or other third-party products supplied by Allsteel.

TO THE EXTENT ALLOWED BY LAW, ALLSTEEL MAKES NO OTHER WARRANTY, EITHER EXPRESS OR IMPLIED, INCLUDING ANY WARRANTY OF MERCHANTABILITY OR FITNESS FOR A PARTICULAR PURPOSE. ALLSTEEL WILL NOT BE LIABLE FOR ANY CONSEQUENTIAL OR INCIDENTAL DAMAGES.

This warranty applies only to products sold within the United States of America and the Commonwealth of Canada.

Your Allsteel Dealer is our mutual partner in supporting your warranty requests. To obtain service under this warranty, please contact your Allsteel Dealer.

COM Program

Allsteel understands that customers may at times want to specify fabrics outside of Allsteel's standard fabric offering. Our COM program was designed to make specifying COMs on Allsteel products a simpler, friendlier, and hassle-free process. This process is simple and easy to use, and is described below under "Allsteel to Supply." If a Dealer wishes to manage the COM process themselves, they can do so by following guidelines under "Dealer to Supply". Find out more about Allsteel's COM process by emailing our COM Department at **ASICSCOM@allsteeloffice.com**.

Allsteel to Supply:

1. Select the fabric you wish to use and check the Tailored Solutions Application on Synergy. You need the COM supplier's name, fabric pattern name, and color name to search for approved fabrics.
2. If your fabric is listed as an approved fabric, you may place your order directly with Allsteel Customer Support. Please use the fabric code (e.g., S216426XP) from the Tailored Solutions Test Request on your order in the place of the standard fabric code. **Make sure to mark on the top of the order "Allsteel to Supply."** If your fabric is not listed as approved, you will need to complete a COM Test Request on Tailored Solutions. Allsteel will arrange to obtain test fabric and you will be notified of the results within 3 to 5 working days of receipt of the test yardage by Allsteel.
3. If the fabric is approved, you will receive an email summary from Tailored Solutions with the correct price grade and fabric code for order purposes. Written COM price quotes hold pricing for 90 days after issue date.
4. Once the fabric has been approved by Allsteel, enter your order directly with Allsteel Customer Support. Allsteel will purchase all COM fabric directly from the COM suppliers and schedule for production.

   In the event that the Dealer decides to cancel a COM fabric order, the Dealer is responsible for the cost of the fabric plus a handling charge that is equal to 10% of the fabric cost.

Dealer to Supply:

1. Select the fabric you wish to use and check the Tailored Solutions Application on Synergy or call Allsteel Customer Support to see if the fabric you have chosen has already been tested and approved on the product you are interested in. You need to have the COM supplier's name, fabric pattern name, and color name for this inquiry.
2. If your fabric is listed as approved, you may estimate the yardage required by using Allsteel's COM Calculator on Tailored Solutions.
3. If your fabric is not listed as already tested and approved, you will need to complete a COM Test Request on Tailored Solutions. You will need to arrange for the test fabric to be sent to:

   Panel and Seating Test Fabric:
   Allsteel Inc.
   Attn: COM Dept.
   Dock Doors 46-48
   3000 North Hwy 61
   Muscatine, IA 52761

   Allsteel requires 3 yards of fabric for each panel system fabric being tested and 1 yard of fabric for all seating testing. Make sure to include two memo samples for each fabric to be tested with the test fabric. You will be notified of the test results within 3 to 5 working days of receipt of the test yardage by Allsteel.
4. Place your order directly with Allsteel Customer Support. **Make sure to mark on the top of the order "Dealer to Supply."**
5. All "Dealer to Supply" orders will be charged Grade 2 pricing for seating, Grade 1 pricing for Gather, and Grade B pricing for panels. Dealers will pay for the COM fabric separately.
6. All "Dealer to Supply" fabric must be sent on a fabric roll.
7. Place your fabric order directly with the COM Supplier with instructions for the fabric to be sent on a fabric roll to:

   HNI Fabric Distribution Center — Dealer PO Number
   COM Production Yardage
   Docks 2-4
   3000 University Drive
   Muscatine, IA 52761

   Information that MUST be included in the packing slip attached to the fabric:

   1. Dealer's Purchase Order number to Allsteel
   2. Allsteel's Tracking number for the COM fabric
   3. Dealer Name
   4. Yards of Fabric

   If the fabric shipment does not match the correct fabric and yardage, Allsteel will notify the Dealer for resolution.

   If Allsteel receives fabric with incorrect labeling that cannot be linked to an Allsteel furniture order, Allsteel will hold the fabric for up to 7 days, while the COM Expeditor attempts to identify the order. After 7 days, Allsteel will return the fabric to sender. There are no exceptions to this policy.

   Any cancelled orders are subject to cancellation charges up to the full value of the Allsteel product cancelled. Allsteel will determine the actual cancellation charge at the time the cancellation is requested.

Additional Policy Information:

The company assumes no responsibility for the overall appearance, flammability, normal durability, colorfastness, or any other quality standards. The Company reserves the right to reject a COM if the quality of the COM is not satisfactory for the product. Should this occur, the customer will be notified with an explanation within 7 working days of receipt of test materials.

The company is not responsible for fabric that has become obsolete at the COM supplier, that is of poor quality, or that is delivered late to the manufacturer from the COM supplier. Excess yardage will be disposed of at Allsteel's discretion.

All cancellations or changes to COM orders are subject to Company approval. Because of the nature of COM, special fabrics, finishes, and structural modifications, products ordered as specials and then cancelled prior to shipment are subject to cancellation costs up to the full value of the product cancelled. The company determines the actual cancellation charge at the time the cancellation is requested. Upon approval, a cancellation number is issued to the Customer.

Purchase orders will not be accepted or entered unless the testing process is complete with positive results.

If all testing has been previously completed, re-testing is only necessary if fabric is to be used on a different product, or pattern direction has changed from that previously approved.

Previous test results can be obtained by a customer on the Tailored Solutions Application or by calling Allsteel Customer Support.

COM testing will require 3-5 working days from receipt of test yardage.

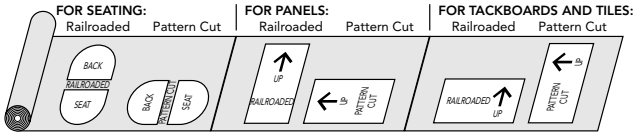

All COM fabric will be applied to seating and panel systems Pattern Cut unless Railroad Cut is requested and approved on the COM Test Request in Tailored Solutions. Any fabrics approved as a width pass, the dealer is responsible for clarifying Railroad Cut on orders containing items that are too large to support the Pattern Cut of a fabric application (any items larger than 48" high or wide).

Fire Retardant

The Dealer is responsible for ensuring that the COM fabric is certified to meet all flame retardant requirements.

For more information please contact Allsteel Customer Support.

YARDAGE REQUIREMENTS FOR FABRIC WITH REPEATS — FOR USE ON GATHER™ PRODUCTS

Fabric Width	Plain Fabric	2"– 14" Repeat	15"– 19" Repeat	20"– 27" Repeat	28"– 36" Repeat
54"	0	+15%	+20%	+25%	+30%
53"	+6%	+19%	+24%	+28%	+36%
52"	+13%	+23%	+28%	+33%	+38%
51"	+19%	+26%	+31%	+36%	+41%
50"	+25%	+30%	+35%	+40%	+45%
49"	+30%	+35%	+40%	+45%	+50%
48"	+35%	+40%	+45%	+50%	+55%
47"	+45%	+50%	+55%	+58%	+65%

Depending upon the pattern repeat, it may be necessary to pattern cut the fabric. This will require 10% additional fabric.

To calculate multiple repeats (vertical and horizontal), add each repeat for total yardage required. For example for a fabric width of 54": 7" vertical requires 15%, 15" horizontal requires 20% total additional yardage required equals 35% (15% + 20%). Therefore, if your chair requires 2 yards of fabric, multiply 2 by 35%. Then 2.7 yards will be yardage required.

Special Paint & Stain Policy

Allsteel at its own discretion may modify its standard products with non-standard paint and stain colors to meet specific needs. Dealer is required to submit a special paint or stain request via the Tailored Solutions Application on Synergy. A sample of the non-standard paint or stain color desired will be required for matching. Pricing, lead time, and order information will be provided at the time of approval.

- For each new requested stain or paint, there will be a $500 net fee to cover supplier costs to match the special item.
- For existing, previously-approved stains or paints, there is no $500 matching fee, however, there is a sample chip fee of $175 net for stains and $100 net for paints.
- Samples, preferably at least 3" x 5" chips, of the exact color desired should be sent to the Allsteel Tailored Products Group. Paint matches require (3) sample chips and stain matches require (3) sample chips. Please mail these sample chips to the address below and reference the Special Item Request Number from Tailored Solutions.

  Allsteel Inc.
  Attn: COM Department
  Dock Door 46-48
  3000 North Hwy 61
  Muscatine, IA 52761

- Allsteel will color match the sample and send control samples to the address provided in the request. Dealer will review Allsteel's color match and approve by signing the back of the sample chip. Send the signed sample back to the Allsteel Tailored Products Group.
- Product pricing for all special paints falls under the Select Paint price grade.
- Orders will not be accepted until Allsteel receives the Dealer's written approval on the color match.
- Extended lead times will apply on orders containing special paints or stains.
- Due to manufacturing techniques, materials, and quality issues, some exclusions will apply and some matches may be declined.

Important Notes

- Natural veneer is subject to nature's quality control. Differences in grain and color are naturally occurring variations and cannot be controlled by the manufacturer and cannot be considered as product defects. Natural veneer has the characteristics and beauty of a living organism; with its own variations of grain, growth, and color patterns. For these reasons, Natural veneer is preferred by many for its warmth and personal characteristics.
- Color changes will occur over time when wood is exposed to light. For this reason, when new product is ordered as an addition to existing product, there will be color variances between the old and new product. Please remember when specifying new product that although the species of veneer will be the same, additional product is being manufactured from a different tree. It may take several months for the new furniture to mature to the color level of existing product. Even with this maturation process the additional product will not be an exact match.

Special Laminate Policy

The Company at its own discretion may modify its standard products with non-standard laminates to meet specific needs. Contact the Allsteel Tailored Products Group for pre-approved Wilson Art laminates and pricing for special laminates. When requesting a special laminate please supply manufacturer, along with name and pattern number of laminate.

- Extended lead times will apply on orders containing special laminates.
- Due to manufacturing techniques, materials, and quality issues, some product exclusions will apply and some requests may be declined.

Further™

A full gallery of typicals from each Allsteel system can be found on our website: **www.allsteeloffice.com/TypicalsGallery.**
Each typical includes a complete BOM with current pricing, downloadable CAD files and PDFs of each drawing.

Linear Shapes

Use the Allsteel Typicals Gallery to find the components used in a Further Station.

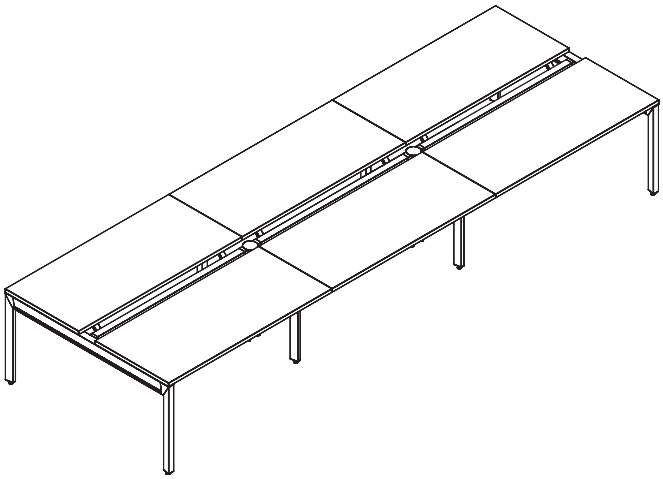

Further Beams Connected Bench 5' x 6'

Bench configuration encourages collaboration.
Typical # FTR 209

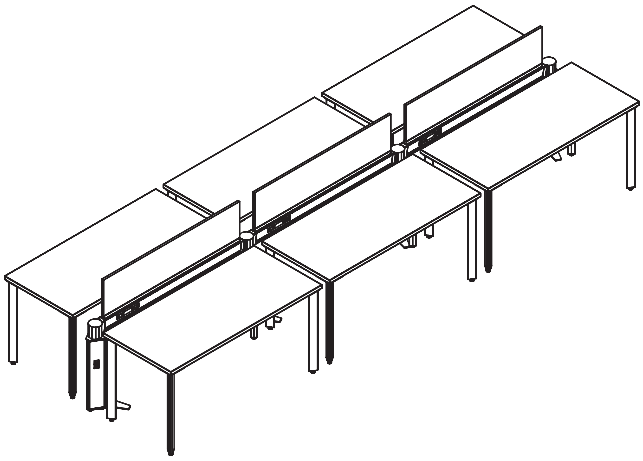

Further Bench w/Freestanding 5' x 6'

Mobile tables provide the ability to reconfigure as needed.
Typical # FTR 101

Organic Shapes

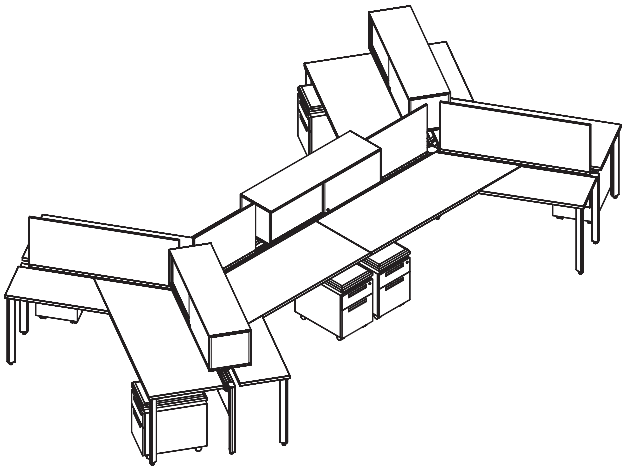

Further Beam Connected Dog Bone 5' x 5'-6"

Trapezoid worksurfaces provide an open feeling.
Typical # FTR 222

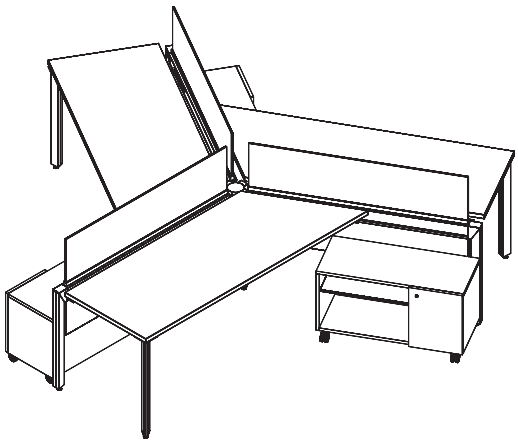

Further Pinwheel w/Freestanding 6' x 7'

Mobile credenzas double as guest seating.
Typical # FTR221

NOTE: Further Typicals can be found at www.allsteeloffice.com/TypicalsGallery.

A full gallery of typicals from each Allsteel system can be found on our website: **www.allsteeloffice.com/TypicalsGallery.**
Each typical includes a complete BOM with current pricing, downloadable CAD files and PDFs of each drawing.

Single Sided

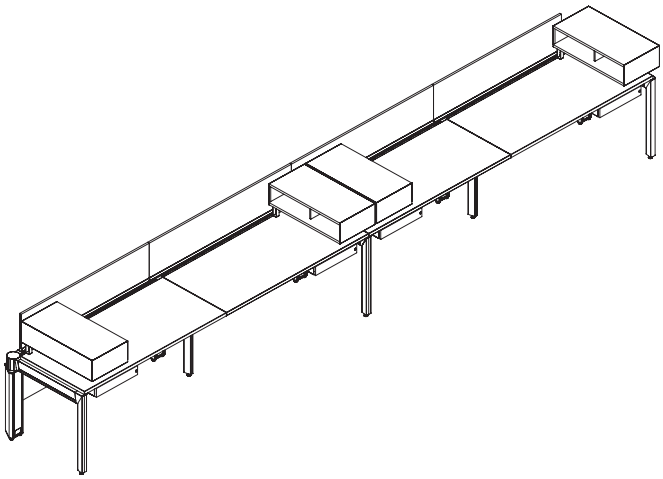

Further Touchdown 5' x 6'

Storage and screens provide privacy.
Typical # FTR 272

90° Planning

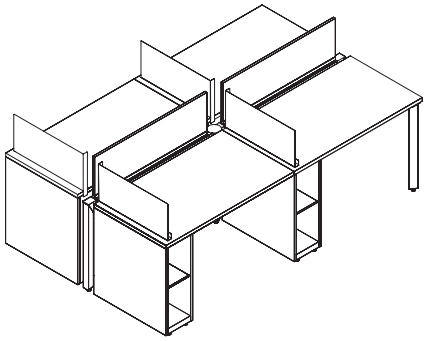

Further Short Bench 5' x 6'4"

Lateral screens provide touch down privacy.
Typical # FTR 275

Dual Sided

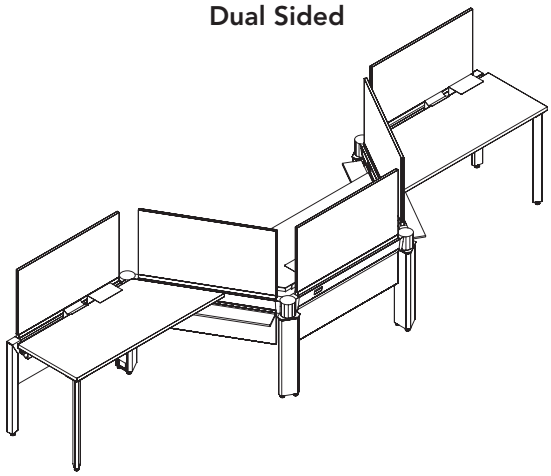

Further Small Beehive 5' x 5'

Ying yang use of trapezoid worksurfaces makes most of limited space.
Typical # FTR 270

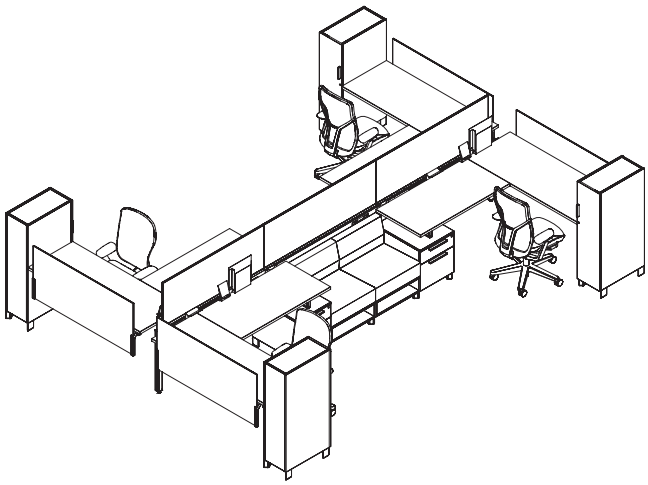

Further with Involve® 6'3" x 8'

Soft seating provides impromtu meeting area.
Typical # FTR 268

NOTE: Further Typicals can be found at www.allsteeloffice.com/TypicalsGallery.

Further™

Choice is yours.

Further is an agile furniture solution that embraces the ever-changing workplace and frees people to adapt their environment — simply, elegantly and efficiently — at their own pace.

At the heart of Further is the hub. Ultimately flexible, the hub provides power and data support for a variety of applications, whether beam supported or freestanding.

Whether the planning approach is organic or linear, individual or team-based, Further can bring your design to life.

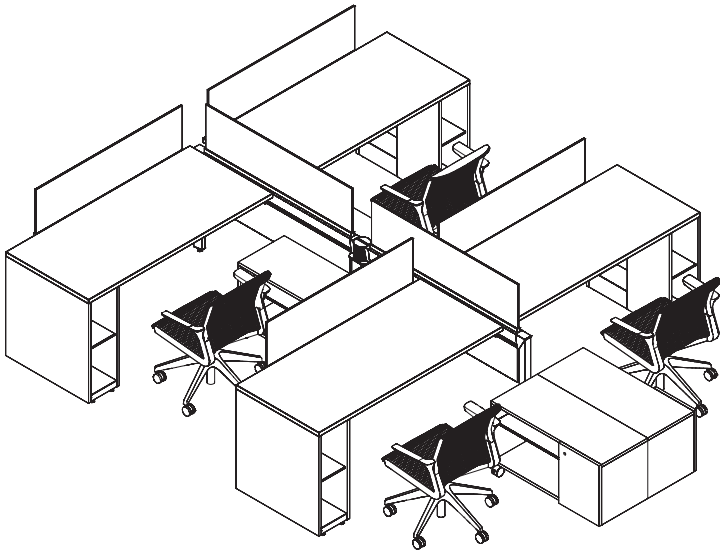

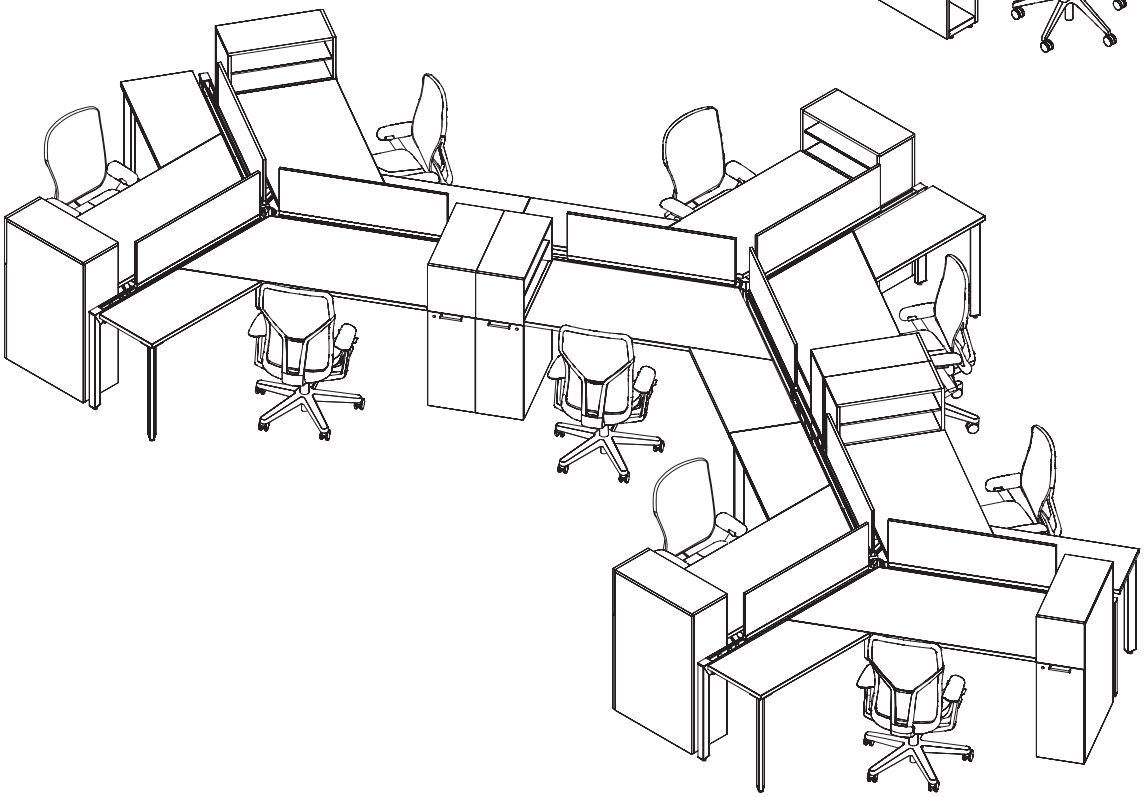

HUBS, BEAMS, and SUPPORTS

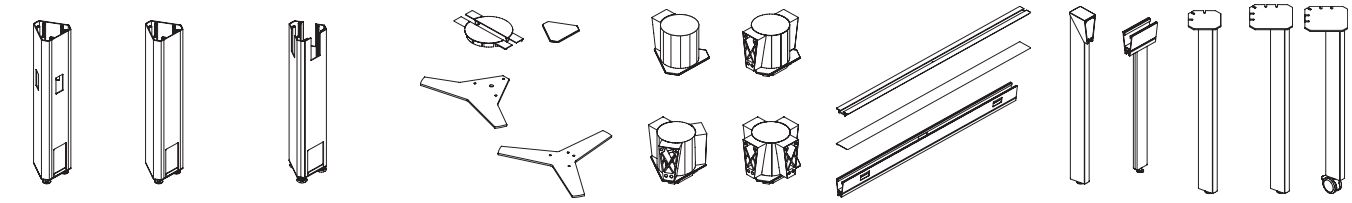

Ported Hub | Non-Ported Hub | High Capacity Hub | Hub Covers and Bases | Hub Connectors | Beams and Trim | Legs

WORKSURFACES — Laminate

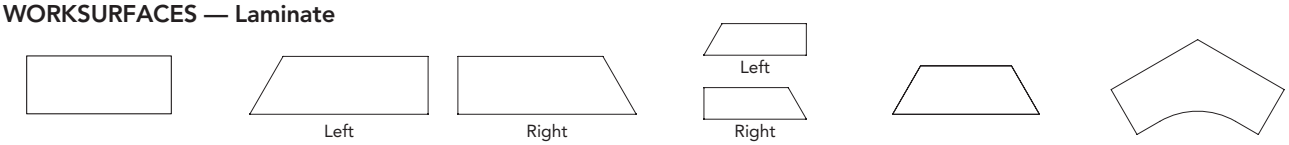

Rectangular | Trapezoid | Runoff | Symmetrical Trapezoid | 120°

ELECTRICAL & DATA — Power Kit

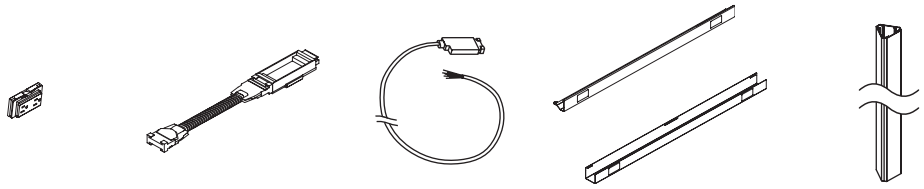

Duplexes | Harnesses | In-feeds | Wire Managers | Power Pole

SCREENS

Glass

Fabric

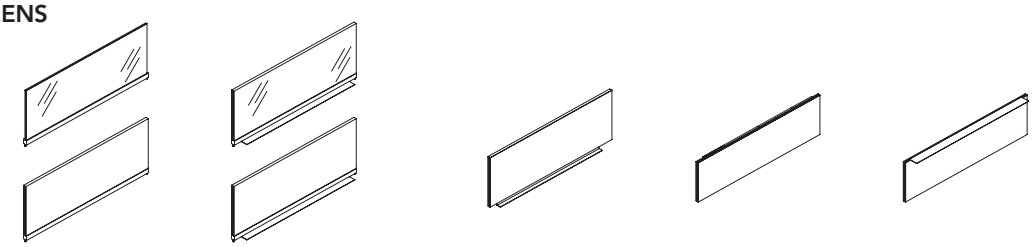

Beam Mounted Screen | Table Mounted Screen | User Movable Screen | Beam Mounted Modesty | Table Mounted Modesty

STORAGE

Horizontal — Laminate with Metal

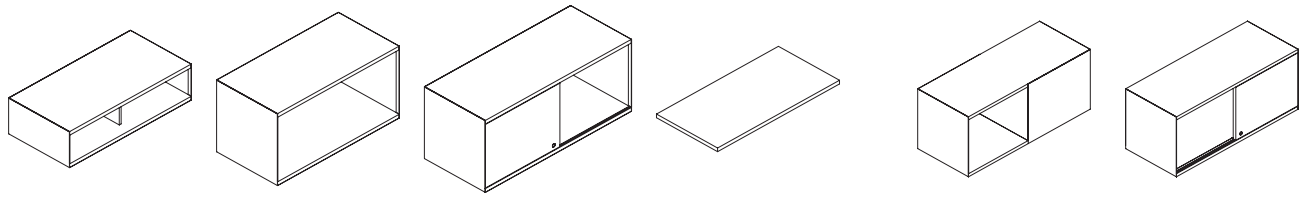

Nitch | Open | Sliding Door | Beam Mounted Shelf | Dual-Sided Open | Dual-Sided Sliding Door

Floor Based — Laminate with Metal

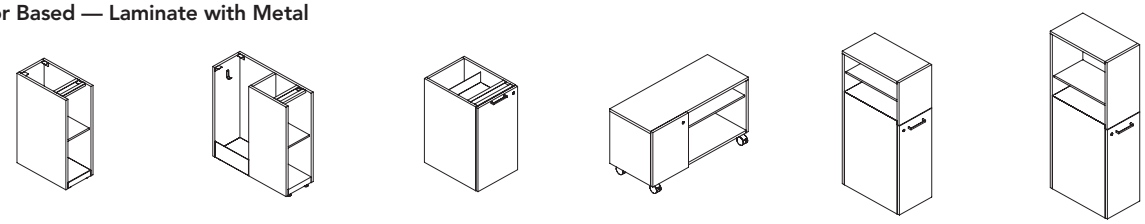

Open Support Pedestal | Open w/Bin Pedestal | Pull Out Drawer Support Pedestal | Mobile Credenza | 42½"H Tower | 50"H Tower

Worksurfaces and Supports

GSA Reference Page

Flat Edge Detail

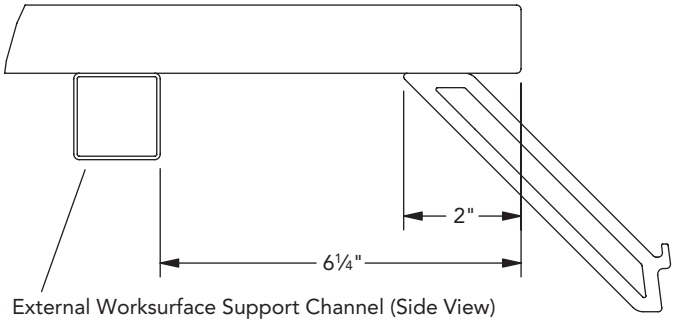

External Worksurface Support Channel (Side View)

Trapezoid and Runoff Worksurfaces (Top View)

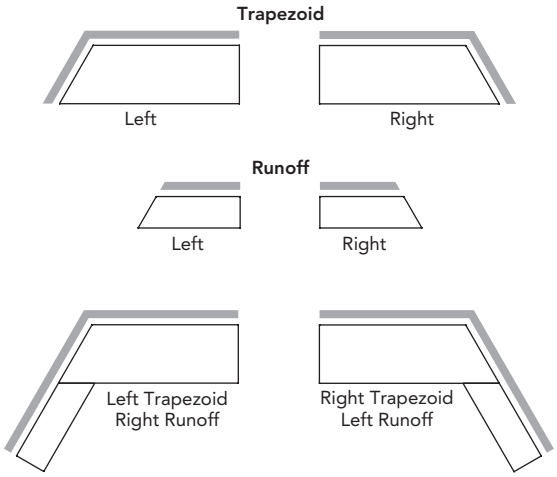

Shaded edge is side to attach to beam to be on module.

All Worksurfaces (pages 28-33)

- All worksurfaces for Further are 1¼" thick particle board core with top surfaces finished in high pressure laminate, bottom surfaces covered with a backer sheet, and with a flat edge.
- Edge band is 2mm thick ABS plastic on all edges.
- All worksurfaces exclude grommets or scallops.
- 24"D worksurfaces support the use of storage from other Allsteel product lines.
- The gap from the back edge of the worksurface to the beam is 1⅞".
- Back edge of the worksurface to the beam centerline distance is 3".
- Maximum worksurface overhang of a parent run is 12". Worksurfaces that overhang the parent run by more than 12" require system legs or supporting storage to support the overhanging edge.
- Maximum 12" overhang when worksurfaces are used in freestanding or adjustable-height applications.
- Distance from floor to top of worksurface is 29½" with glides fully retracted.
- External worksurface support channels are required for unsupported spans greater than 60" — see description below.
- Legs and supports from other product lines (Stride post legs, Involve open legs, etc.) can be used but there are no pilot holes or threaded metal inserts to support ease of installation and reconfiguration.

Rectangular Worksurfaces (page 29)

- Primary worksurface depths are 21", 24", and 27" (allows for gap and 24", 27", or 30" dimension to center of beam).
- Actual width and depth are equal to the nominal width and depth.

External Worksurface Support Channel (page 28)

- Must be added to unsupported spans greater than 60". Pilot holes are included on worksurface to ensure accurate placement to avoid interference with screens, mounting plates etc.
- Extends 1¼" below the worksurface. Stiffener is 5⅝" from the back edge of the worksurface (measured from back edge of surfaces to flange of stiffener); 6½" from back edge of the worksurface to the vertical wall of the stiffener.
- May interfere with storage or mounting of accessories.
- When using tethered surfaces order to match the size of worksurface. *Example:* Z5SC72 goes with an 72"W worksurface. Stiffener is 12" shorter than worksurface. For worksurfaces over 84", add a worksurface support leg or support storage centered along the width of the surface.
- If floor support storage is used, subtract width of storage from size of stiffener.
- For freestanding tables order one size down. Stiffener is 18" shorter than worksurface. Example: Z5SC66 is used with a 72"W worksurface.

Trapezoid Worksurfaces (pages 30-32)

- Primary worksurface depths are 21", 24", and 27".
- When using trapezoid surfaces beams will be on module when short side is oriented toward the beam. Using long side oriented to beam will be a non-modular application, specify nearest beam length.

Trapezoid Runoff Worksurfaces (pages 30-32)

- Run off worksurface depths are 15" and 18".
- When using run off surfaces the hand of the run off should be opposite the hand of the parent to match beam lengths.
- Flat bracket T612FB and system support leg U6L2FG are required when using run off surfaces with primary surfaces in 120 degree applications.
- Are not allowed to be used for freestanding tables.

GSA Reference Page

Flat Edge Detail

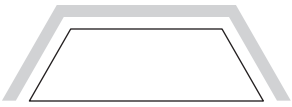

Symmetrical Trapezoid Worksurfaces (page 33)

- Symmetrical Trapezoid worksurface depths are 21", 24", and 27". Sized for intended gap on three sides of worksurface.
- When using trapezoid surfaces beams will be on module when short side is oriented toward the beam. Using long side oriented to beam will result in a non-modular application, specify nearest beam length.
- Back edge widths 39"- 57"W require 4 worksurface brackets U6WBTF. Back edge widths over 57"W require 5 brackets.
- Models with a front edge length of 70" and wider require a support leg centered and no more than 18" from front edge in both tethered and freestanding applications
- Models with back edge of 60" in length and wider require external stiffener. Stiffener should be undersized by 12" from length of front edge.

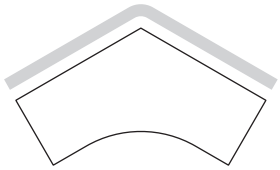

120˚ Worksurfaces (page 33)

- 120˚ worksurface depths are 21", 24", and 27".
- Requires 3 system legs U6L2FG for support when mounted perpendicular to beam – 2 at the end and one at the outside corner.
- Can be configured with Altitude™ height-adjustable bases.
- Can be configured with support storage on either side of the worksurface.
- Cannot be used as a freestanding table.
- Requires 4 worksurface brackets U6WBTF when primary sides of surface are parallel with beams.
- Requires 2 worksurface brackets U6WBTF when being used perpendicular to beam.

Shaded edge is side to attach to beam to be on module.

Worksurfaces and Supports

Further™ — Working with Hubs

GSA Reference Page

The Hub is at the heart of Further. A hub can be freestanding to support the electrical and data needs of a collaborative space, as a powered spine paired with freestanding tables, or to serve as the power and structural support when integrated with beams, legs, and beam supported worksurfaces.

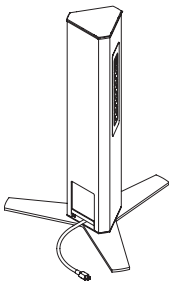

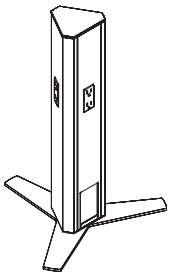

Collaborative Standalone Hubs provide access to power and data in teaming spaces in areas outside of the primary work area. See pages 60-63.

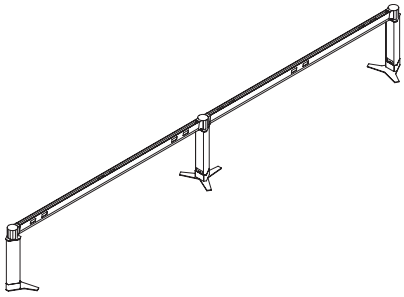

Multiple Hubs with Beam(s) freestanding provide the framework to dock mobile tables. High capacity hubs have additional cutouts to support external electrical and data applications.

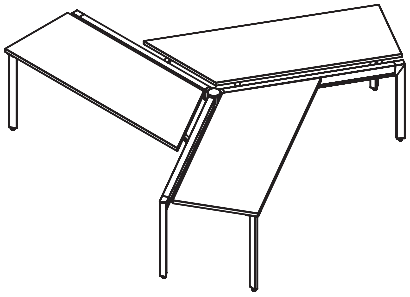

Hubs and Beams can provide support to worksurfaces in a beam connected configuration.

Hub Dimensions

23⅜"H Hub with top cap, hub with connector kits are 28"H and add 6" per hub to length of run with beams.

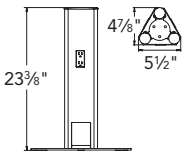

Hub with U3HAL base

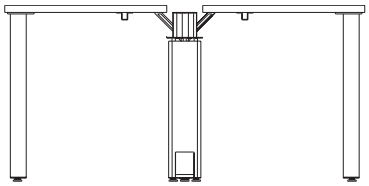

Hub to Beam Connectors

1 Beam to Hub Model U3CHB1

2 Beams to Hub — Model U3CHB2

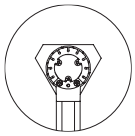

Single

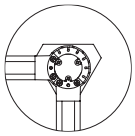

2-Way 90°

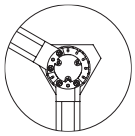

2-Way 120°

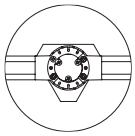

2-Way 180°

3 Beams to Hub — Model U3CHB3

4 Beams to Hub — Model U3CHB4

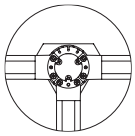

3-Way 90°

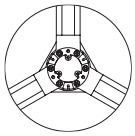

3-Way 120°

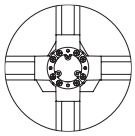

4-Way 90°

HUB CONNECTOR KITS		Hub to Beam Connector Block(s)	Gap Filler Kits (3 pack)	Top Casting & Mounting Bracket	Full Top Trim
Model #	Description				
U3CHB1	1 Beam to Hub Connector Kit	1	3 kits (9 fillers)	1	1
U3CHB2	2 Beams to Hub Connector Kit	2	2 kits (6 fillers)	1	1
U3CHB3	3 Beams to Hub Connector Kit	3	1 kit (3 fillers)	1	1
U3CHB4	4 Beams to Hub Connector Kit	4	0	1	1
ALA CARTE					
U3CHBG	Hub to Beam Gap Filler (3 – 30° fillers, fills 90°)		1 kit (3 fillers)		
U3CHBC	Hub to Beam Connector Block	1			

Hubs (page 34)

- Hubs can carry power and/or serve as beam support.
- Hubs can be ordered as non ported or ported. For ported hub see pages 60-63.
- Hubs have one removable face for installation of power and data.
- Removable face has a sliding access door for in-feed cabling. In-feed can also enter through cut-out in underside of unit — see page 40 for dimensions.
- Ported hubs require power kits and circuit specific receptacles – each ordered separately. See pages 60-63.
- Hub units include 2" leveling glides for beam-supported applications. Hub base kits can be specified with or without leveling for various applications (See page 60).
- High capacity hub U6H2SHC has cut outs on the large face of hub and cover at the top to allow for added data capacity and external electrical to exit hub below the beam. See page 40.
- High capacity hub is designed for use with external electrical and data applications - 42 data cables with electrical or 72 cables without electrical.
- Data filler is not required for high capacity hubs.
- Quantity of hubs required depends on configuration — see pages 19-27.

U6H2SHC

Hub to Beam Connector Kits (page 34)

- Reconfigurable connector kits used in conjunction with hubs to support beams.
- Ordered by quantity of beams joined to hub — 1, 2, 3, or 4 beams; or connector gap filler and connector blocks can be ordered ala carte to aid in reconfiguration.
- Kits include top casting mounting bracket, top casting, hub to beam connector(s), gap fillers, connector gap fillers, and full top trim. See table below.
- Beams can be mounted in 30 degree increments using the same hub and beam connector kit. *Example:* 3 beam connector kit can make a 120 degree or a "T" arrangement. See beam connector kit illustration at left.
- When hub connector kit is mounted on the hub unit, a gap is created to pass data cords out of the hub.

Data Gap Filler — included with hub (page 34)

- Black plastic components (model U3THG) can be inserted to fill in the data routing gap. Ordered as a 3 pack and can be placed on 1, 2 or 3 sides of the hub.

Freestanding Hubs with Beam(s)

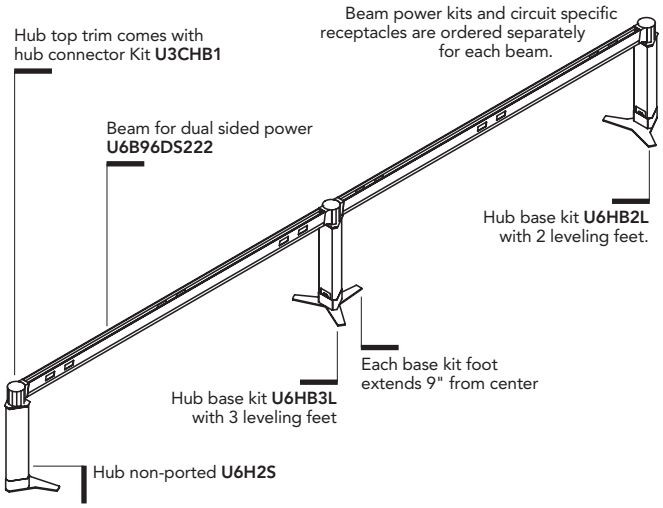

Hub with Beam Supported Worksurfaces

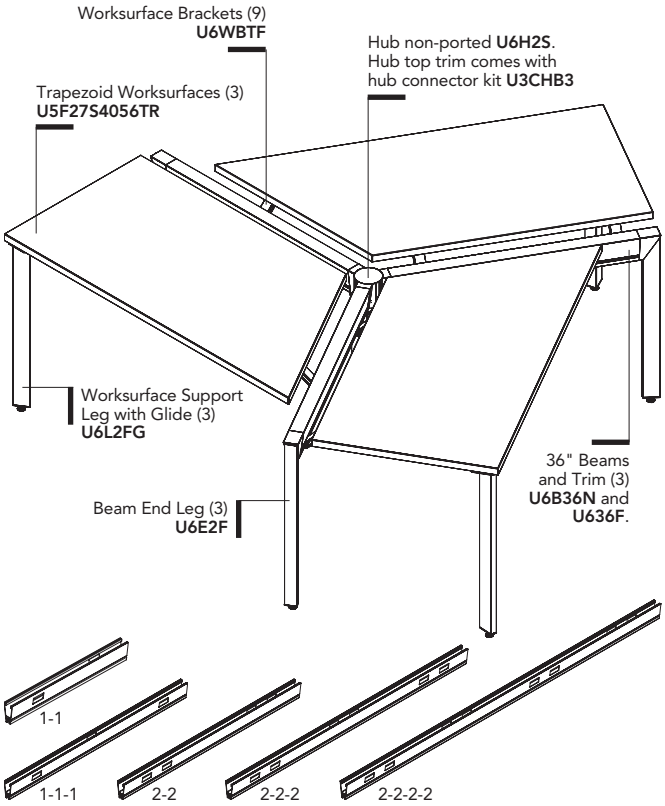

Beam Electrical Knockout Configurations

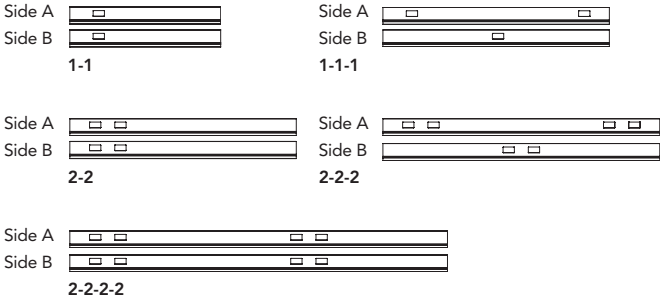

Hub Split Top Trim (page 34)
- Required when passing screen(s) over a hub (ordered separately).

Hub Feet Kits (page 34)
- Used in applications where hubs and beams are freestanding (no attached worksurfaces).
- Units available with two or three feet. Each foot extends 9" from center, see illustration at left. Three feet required for collaborative standalone hub (see page 60).
- Available as leveling when using beams; or non-leveling for collaborative standalone hubs.
- Leveling kits are used with hubs with beams and provide 2" of adjustment. Feet stay on floor and hub unit levels within sleeve.

Carpet Grippers (page 34)
- Required for placement under hub leveling glides in single sided benching applications when beam supported station is on a carpeted surface and not floor anchored. The kit (U3CG12) contains 12 carpet grippers — enough for 4 hub units.

Beams (page 35)
- Available in 6" increments non-ported in lengths 18"-96" and dual-sided powered in lengths 36"-96". See illustrations at left.
- Flat or mounting top trim required to finish off beams — order separately.
- Usage rules vary depending on configuration — see pages 19-27.
- Height from floor to bottom of beam is 23⅞"; and to top of the beam with top trim installed is 28⅛".
- Beams do not connect directly in-line with one another, use in conjunction with hubs, in-line leg, or benching end connector.
- Beams must be finished off with a beam end leg, hub, or benching end connector.
- Beams can be used in conjunction with beam end legs and benching end connector to create a benching end condition. See example on page 10 — Typical # FTR 209.
- Further beams can be ported or non-ported for power and come in various power ready configurations.
- All beams include a reveal that can be used in conjunction with worksurface mounting brackets to mount worksurfaces at 29½" high.
- Continuous reveal in beam, allows for worksurfaces to be mounted off-modularly concurrent with specification rules.

Cantilevered Beams (page 35)
- Cantilevered beams can be attached to a hub to extend the length of a run. Available in 6", 9", or 12".
- Model includes a finished end cap.
- Must order flat or mounting top trim separately.
- Worksurfaces can be mounted on a cantilevered beam when used in conjunction with a worksurface support bracket.
- Horizontal storage cannot be mounted to a cantilevered beam.

Beam Top Trim and Top Trim Filler (page 36)
- Available in 6"-96" lengths in flat or mounting and is required to finish off a beam. Must match beam lengths. No exceptions.
- Flat top trim snaps onto the top of the beam.
- Flat top trim is required on beams used in benching end condition.
- Mounting top trim contains a reveal for mounting screens and upmount storage and is attached to the beam with included hardware.
- Chicago mounting top trim must be used for Chicago Code.
- Optional beam top trim filler snaps into open channel on mounting top trim for improved aesthetic on unused portion of channel. 12" or 60" length can be cut to size in the field to be used with beam mounted stanchions and screens. ABS plastic in flat platinum color.

Worksurfaces and Supports

Further™ — Working with Supports

GSA Reference Page

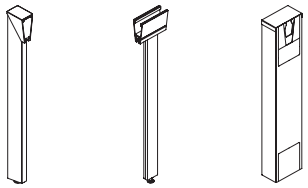

Beam End Leg (Adds 3") | In-Line Beam Leg (Adds 6") | Wall Mount (Adds 3")

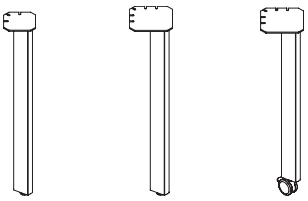

Worksurface Support Leg | Table Leg w/Glide | Table Leg w/Caster

Return Beam - Single Sided

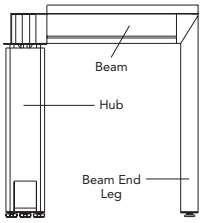

Return Beams - Double Sided

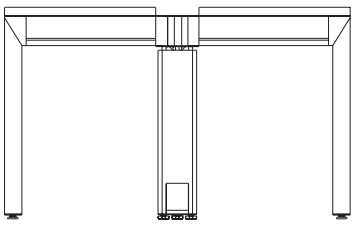

Bench End

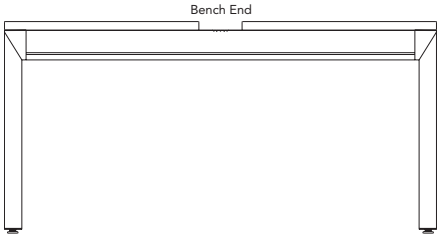

Pedestal Storage

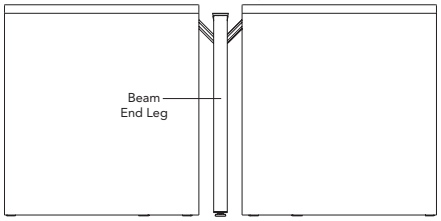

Worksurface Support Leg With Beam End Leg

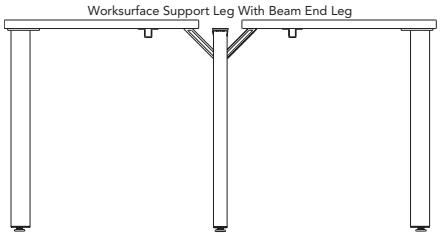

Worksurface Support Legs With Hub

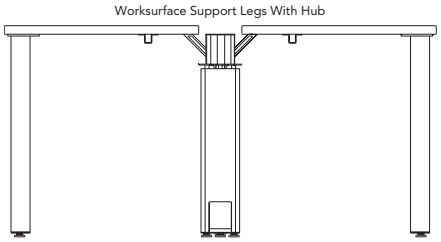

Beam End Support Leg (page 37)
- Utilized to finish off a beam run when a hub is not used.
- Usage rules vary depending on configuration, see specification rules and examples on pages 19-27.
- Beam end leg includes: leg, die-cast connector, and top trim.
- Beam end legs add 3" to run.
- End legs are a fixed height to support worksurfaces at 29½"H, with leveling glides that provide 3⅝" of adjustment.

In-Line Beam Support Leg (page 37)
- Inline beam support leg is for use in a 180º condition in beam supported environment. Does not come with top trim, must order 6" trim piece U6B06F (flat trim) or U6B06M (mounting trim for screens).
- Usage rules vary depending on configuration — see pages 19-27.
- In-Line Beam legs are a fixed height to support worksurfaces at 29½"H, with leveling glides that provide 3⅝" of adjustment.

Wall Mount (page 37)
- Allows for beam run to start from wall.
- Works with both internal and external electrical.
- Cover has knockouts for external electrical and data routing.
- Capacity for two electrical in-feeds and 72 data cables.
- Mounting hardware for attaching to wall is to be supplied by installer. Requires hitting wall stud.
- Exterior dimensions: 5½"W x 3"D x 28⅛"H.
- Can be used in freestanding beam applications.

Bench End Connector Kit (page 37)
- Used only with non-powered beams to create end supports. Each end support adds 3" to the length of run.
- Bench end support components are ordered separately and assembled in the field. It requires 2 – beam end legs U6E2F, 1 – bench end connector kit U3CBBE, 2 – worksurface brackets U6WBTF, and applicable non-powered beam and beam trim:
  - U6B42N beam for 2 – 21"D worksurfaces and U6B42F beam trim — flat
  - U6B54N beam for 2 – 27"D worksurfaces and U6B54F beam trim — flat
- 42" and 54" non-powered beams come with pilot holes for installing the bench end connector kit to help ensure that the parent beams are centered on the bench end beam.
- When used this will deface the user side of the end beam due to self drilling screws used to attach bench end connector kit.
- Power cannot be carried through from parent run to bench end beam.
- Cannot use beam mounted modesty panels.

Worksurface Support Leg (page 37)
- Worksurface support leg U6L2FG requires one side of worksurface to be tethered to a beam. Same leg can be used as a shared support leg centered between worksurfaces. Hardware pack includes tie bracket for use in shared applications.
- When used as a shared support leg on 27" deep worksurface, must not be more than 18" back from front edge of worksurface; and on 15", 18" and 21" deep worksurfaces not be more than 12" back from front edge.
- Worksurface support legs are a fixed height to support worksurfaces at 29½"H, with leveling glides that provide 3⅝" of adjustment.

Table Legs (page 37)
- Freestanding tables require either table legs with glides U6T2FG or table legs with casters U6T2FC.
- Leveling glides provide 3⅝" of adjustment.
- Unsupported spans over 60" require external support channel.
- Tables 78" or greater require 2 additional legs in the center of the table (6 legs total) to resist bowing.
- If using 24" or 30" deep surfaces from other product lines table legs will have to be mounted in a non-standard location as the insert and pilot hole locations on these surfaces interfere with the mounting plates.

GSA Reference Page

Worksurface Brackets Required for Attaching to Beams
(Additional Supports Required)

WORKSURFACE SHAPE:	QTY OF WORKSURFACE SUPPORT BRACKETS (Model U6WBTF)			
	1	2	3	4
Rectangular* Perpendicular		21"W–60"W**	Wider than 60"	
Trapezoid* **			28"W–58"W	Wider than 58"
Runoff** **	15"W–39"W	Wider than 39"		
120°		21"D–27"D**		46"W–52"W

*Rectangular ends in return applications require an additional bracket.
**Depth dimension when worksurface is run perpendicular to beam.
***Dimensions are taken from the short width side of surface.
****Runoff worksurface dimension is taken from short side of worksurface.

Worksurface Support Brackets (pages 28 or 37)

- Worksurface support brackets U6WBTF are used to tether worksurface to beam. Further workurface models contain threaded metal inserts at standard locations for brackets along the back edge of worksurface.
- For surfaces that overhang the parent run the worksurface support bracket cannot be more than 12" from the edge of the worksurface.
- For surfaces extending perpendicular to the beam two worksurface brackets are required and the worksurface support brackets cannot be more than 6" from the edge of the worksurface.
- Quantity of worksurface support brackets varies by shape and size of worksurface, and use of supporting storage — see chart at left. Additional supports are required — see pages 19-27.
- When supporting storage is specified at least two worksurface support brackets are required to ensure proper locating of the worksurface relative to the beam. One bracket may be subtracted for each supporting storage unit if worksurface would normally require more than two support brackets.

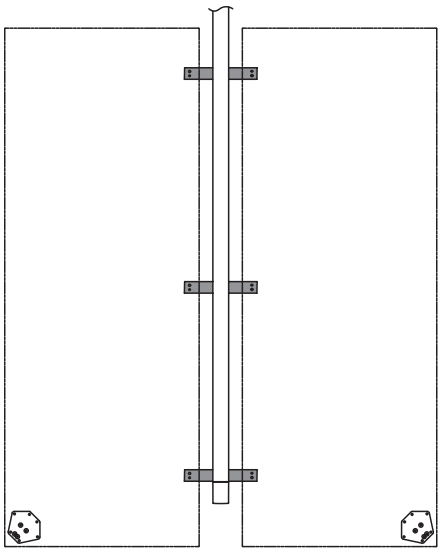

Rectangular with System Legs

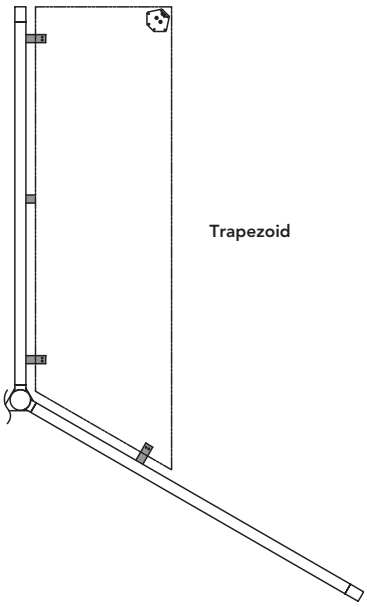

Trapezoid

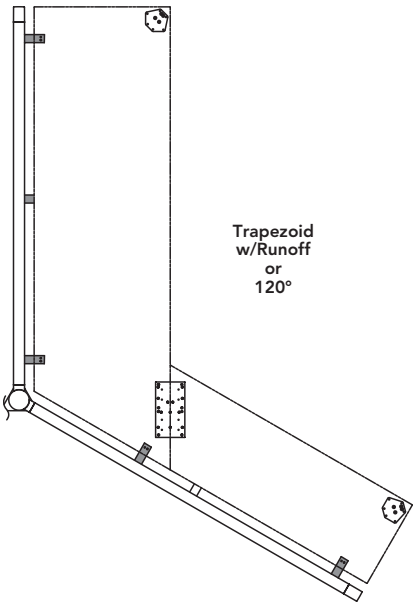

Trapezoid w/Runoff or 120°

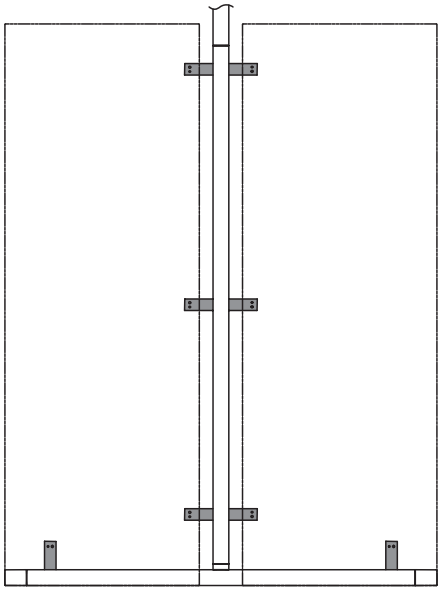

Rectangular with Bench End

Worksurfaces and Supports

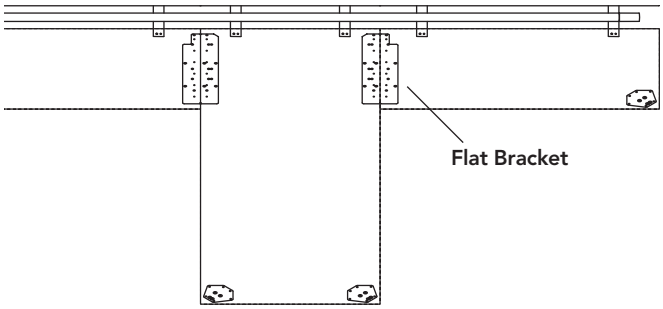

A Flat Bracket is required between the two surfaces when one worksurface is parallel to the beam and another is perpendicular.

Further Stability Requirements
A hub provides the most robust beam support in Further configurations. The stability of a hub can be accomplished by combining other supports as shown:

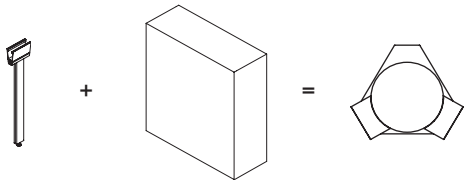

In-Line Beam Leg + Floor Storage* = Stability of Hub

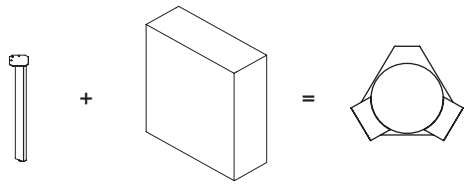

Worksurface Support Leg + Floor Storage* = Stability of Hub

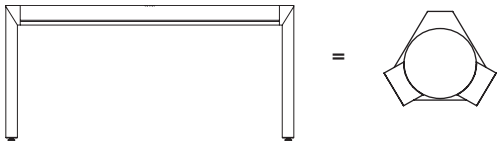

Benching End **= Stability of Hub**

Beam End Leg + Beam and Beam Trim + Beam End Leg

*Floor support storage needs to be within 5" of worksurface leg and on both sides of an in-line beam leg.

Flat Brackets (page 37)
- Flat bracket T612FB is required when using 15" or 18" deep run off surfaces with primary surfaces in 120 degree applications.
- Flat bracket T624FB is used with 21" and 24" deep worksurfaces.
- Flat bracket T630FB is used with 27" deep worksurfaces.

Beam Mounted Shelf — U9XXMS (page 83)

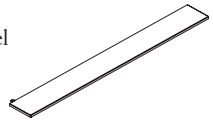

- Mounts to beam using wire manager clip model U9BWMC (ordered separately).
- Widths 24" through 60" in 6" increments.
- 0.429" thick sheet metal x 5"D.
- Cannot be used in conjunction with low capacity wire managers (U9XXBWLCM).
- Can be used in conjunction with high capacity wire managers (U9XXBWHCM).
- Can pass across in-line support leg but not across a hub.
- Cannot be used with below beam electrical.

Single Sided Bench — Beam Connected (Tethered)

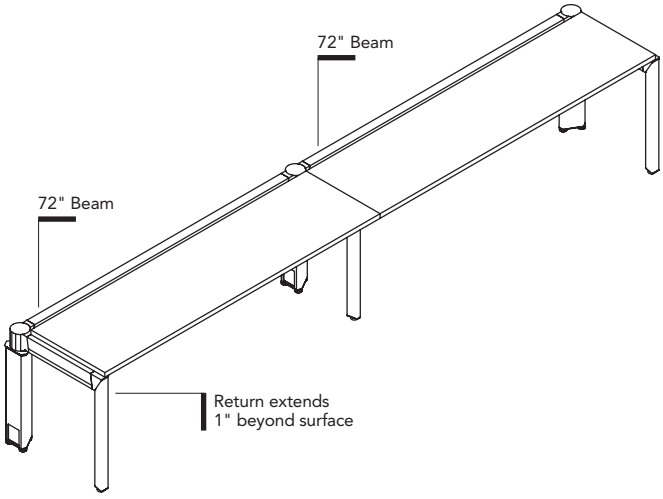

Example Shown (NOTE: Listing below does not include electrical components)

Qty	Model #	Description	List Price	Total
2	U5F2178S	21"D x 78"W Worksurface	$ 623	$1246
2	Z5SC78	66"W External Support Channel	$ 84	$ 168
3	U6H2S	Hub Non-Ported	$ 517	$1551
3	U3CHB2	2 Beams to Hub Connector Kit	$ 228	$ 684
2	U6B72DS222	72"W Beam for Dual Sided Power A2-B2-A2	$ 568	$1136
2	U6B72F	72"W Beam Trim Flat	$ 207	$ 414
1	U6L2FG	Worksurface Support Leg w/Glide	$ 197	$ 197
2	U6E2F	Beam End Support Leg	$ 269	$ 538
8	U6WBTF	Worksurface Support Bracket	$ 55	$ 440
2	U6B18N	18"W Beam Non-Powered	$ 186	$ 372
2	U6B18F	18"W Beam Trim – Flat	$ 83	$ 166
1	U3CG12	Carpet Grippers – 12 Pack	$ 16	$ 16
			TOTAL	$ 6,928

- Maximum single-sided benching length is 26'. Every 13' a full depth return beam off of a hub or floor storage is required. 72" beam maximum.
- A hub is required for end run and mid run support for stability – no inline or beam end legs allowed unless used within 6" of floor supported storage.
- When station is on a carpeted surface carpet grippers are required on hubs, beam end legs, and worksurface support legs.
- Surface depth return runs are required at each end of parent run. Order two beam end leg supports; and 24" beam and top trim for 27"D worksurfaces, or 18" beam and top trim for 21"D worksurfaces.
- Consideration to the parent run length is important as it impacts the aesthetic. If the parent run is 6" shorter than worksurfaces, surfaces will overhang the return run by 2". If specified as normal then the return run will extend beyond edge of surfaces by 1". See illustrations at left.
- Support legs used in a shared application must not be more than 18" back from front edge of worksurface on 27"D worksurfaces, 15" on 24"D worksurfaces, or 12" on 21"D worksurfaces.
- Beam mounted shelf is allowed.
- Beam mounted screens are allowed on spine.

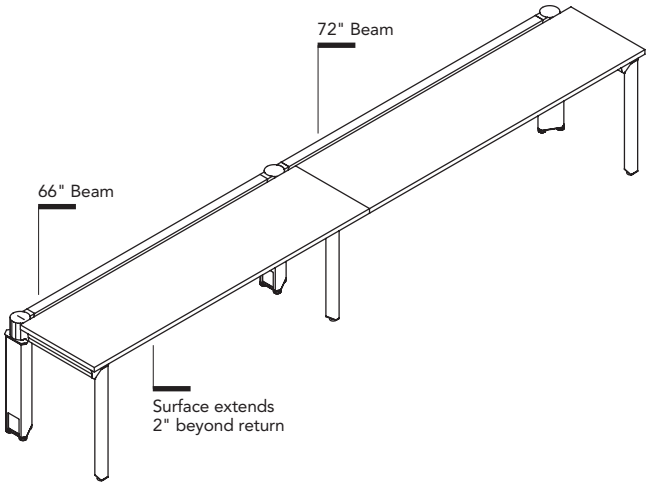

Example Shown (NOTE: Listing below does not include electrical components)

Qty	Model #	Description	List Price	Total
2	U5F2178S	21"D x 78"W Worksurface	$ 623	$ 1246
2	Z5SC78	66"W External Support Channel	$ 84	$ 168
3	U6H2S	Hub Non-Ported	$ 517	$ 1551
3	U3CHB2	2 Beams to Hub Connector Kit	$ 228	$ 684
1	U6B72DS222	72"W Beam for Dual Sided Power A2-B2-A2	$ 568	$ 568
1	U6B72F	72"W Beam Trim Flat	$ 207	$ 207
1	U6B66DS222	66"W Beam for Dual Sided Power A2-B2-A2	$ 517	$ 517
1	U6B66F	66"W Beam Trim Flat	$ 197	$ 197
1	U6L2FG	Worksurface Support Leg w/Glide	$ 197	$ 197
2	U6E2F	Beam End Support Leg	$ 269	$ 538
8	U6WBTF	Worksurface Support Bracket	$ 55	$ 440
2	U6B18N	18"W Beam Non-Powered	$ 186	$ 372
2	U6B18F	18"W Beam Trim – Flat	$ 83	$ 166
1	U3CG12	Carpet Grippers – 12 Pack	$ 16	$ 16
			TOTAL	$6,867

Worksurfaces and Supports

Dual Sided Bench — Beam Connected (Tethered)

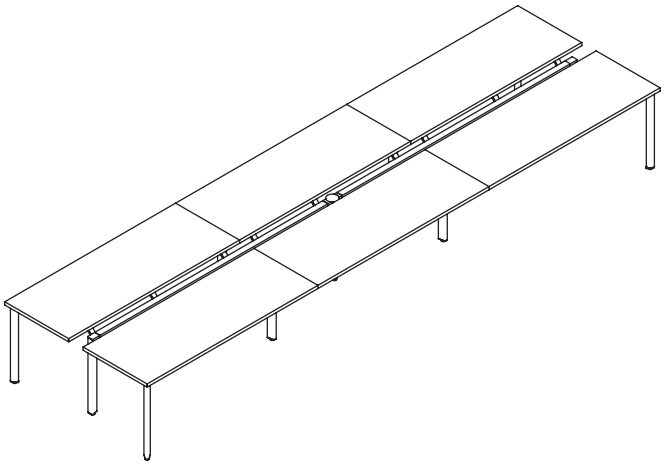

- Maximum benching length is 60' with worksurfaces tethered on both sides of beam.
- A support "to the edge" of worksurface is required on both sides of the worksurfaces every 18' of run. A "to the edge" support could be one of the following: a.) return beam b.) floor support storage c.) bench end d.) worksurface support leg at front edge of worksurface.
- When two worksurfaces are side by side parallel to the beam, a worksurface support leg in a shared application or floor supported storage is required.
- When using an inline support leg either hub or bench end support are required at either end of connected beams if no supporting storage is specified. Powered applications require a hub.
- A hub is required for mid run support when using beam end support legs at end of parent run and support storage is not specified.
- Beam mounted screens allowed.
- Horizontal storage is allowed as long as worksurface stanchions have a surface to rest on.
- Support legs used in a shared application must not be more than 18" back from front edge of worksurface on 27"D worksurfaces, 15" on 24" worksurfaces, or 12" on 21"D worksurfaces.

Example Shown (NOTE: Listing below does not include electrical components)

Qty	Model #	Description	List Price	Total
6	**U5F2772S**	27"D x 72"W Worksurface	$ 543	$ 3258
6	**Z5SC72**	60"W External Support Channel	$ 78	$ 468
1	**U6H2S**	Hub Non-Ported	$ 517	$ 517
1	**U3CHB2**	2 Beams to Hub Connector Kit	$ 228	$ 228
2	**U6B96DR4**	96"W Beam for Dual Sided Power – Right A2-B2-A2-B2	$ 878	$ 1756
2	**U6B96F**	96"W Beam Trim – Flat	$ 248	$ 496
8	**U6L2FG**	Worksurface Support Leg w/Glide	$ 197	$ 1576
2	**U6E2F**	Beam End Support Leg	$ 269	$ 538
18	**U6WBTF**	Worksurface Support Bracket	$ 55	$ 990
			TOTAL	**$9,827**

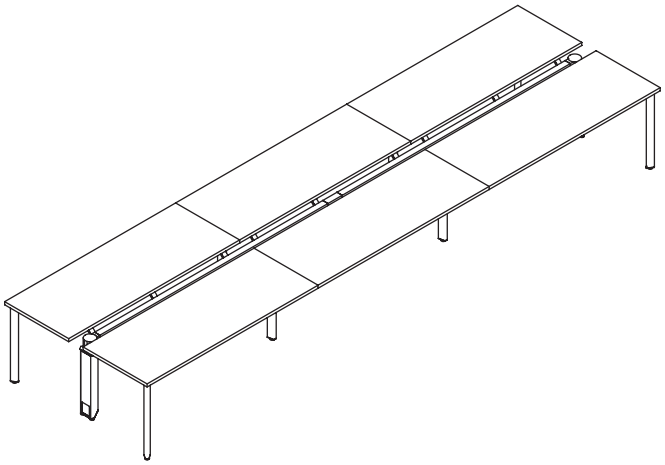

Example Shown (NOTE: Listing below does not include electrical components)

Qty	Model #	Description	List Price	Total
6	**U5F2772S**	27"D x 72"W Worksurface	$ 543	$ 3258
6	**Z5SC72**	60"W External Support Channel	$ 78	$ 468
2	**U6H2S**	Hub Non-Ported	$ 517	$ 1034
2	**U3CHB1**	1 Beam to Hub Connector Kit	$ 192	$ 384
2	**U6B96DR4**	96"W Beam for Dual Sided Power – Right A2-B2-A2-B2	$ 878	$ 1756
2	**U6B96F**	96"W Beam Trim - Flat	$ 248	$ 496
1	**U6B06F**	6"W Beam Trim - Flat	$ 62	$ 62
8	**U6L2FG**	Worksurface Support Leg w/Glide	$ 197	$ 1576
1	**U6S2F**	In-Line Beam Support Leg	$ 217	$ 217
18	**U6WBTF**	Worksurface Support Bracket	$ 55	$ 990
			TOTAL	**$10,241**

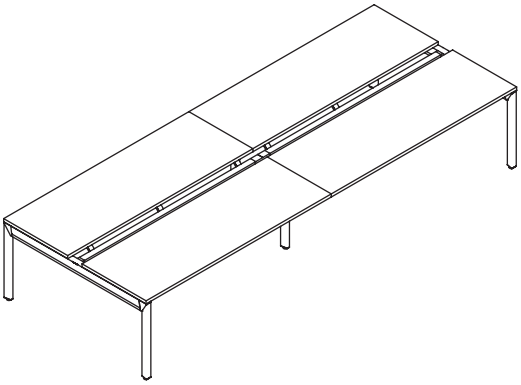

Example Shown (NOTE: Listing below does not include electrical components)

Qty	Model #	Description	List Price	Total
4	**U5F2778S**	27"D x 78"W Worksurface	$ 703	$ 2812
4	**Z5SC78**	66"W External Support Channel	$ 84	$ 336
2	**U6B72DS222**	72"W Beam for Dual Sided Power A2-B2-A2	$ 568	$ 1136
2	**U6B72F**	72"W Beam Trim – Flat	$ 207	$ 414
2	**U6B54N**	54"W Beam Non-Powered	$ 419	$ 838
2	**U6B54F**	54"W Beam Trim – Flat	$ 114	$ 228
1	**U6B06F**	6"W Beam Trim – Flat	$ 62	$ 62
2	**U6L2FG**	Worksurface Support Leg w/Glide	$ 197	$ 394
1	**U6S2F**	In-Line Beam Support Leg	$ 217	$ 217
2	**U6E2F**	Beam End Support Leg	$ 269	$ 538
2	**U3CBBE**	Bench End Connector Kit	$ 62	$ 124
16	**U6WBTF**	Worksurface Support Bracket	$ 55	$ 880
			TOTAL	**$7,979**

Worksurfaces and Supports

Perpendicular to Beam

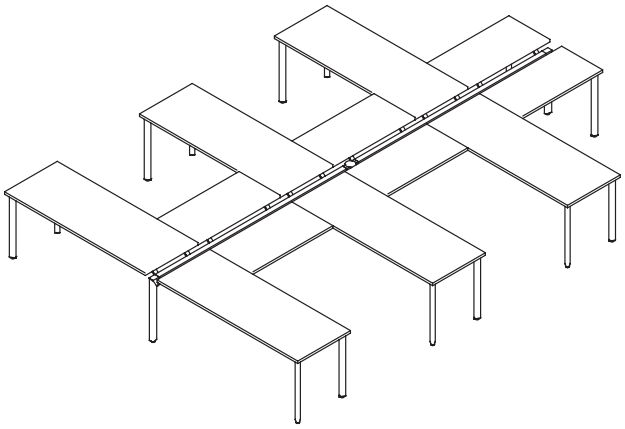

Example Shown (NOTE: Listing below does not include electrical components)

Qty	Model #	Description	List Price	Total
6	**U5F2772S**	27"D x 72"W Worksurface	$ 543	$ 3258
6	**Z5SC72**	60"W External Support Channel	$ 78	$ 468
6	**U5F2142S**	21"D x 42"W Worksurface	$ 320	$ 1920
1	**U6H2S**	Hub Non-Ported	$ 517	$ 517
1	**U3CHB2**	2 Beams to Hub Connector Kit	$ 228	$ 228
2	**U6B96DS222**	96"W Beam for Dual Sided Power A2-B2-A2	$ 878	$ 1756
2	**U6B96F**	96"W Beam Trim – Flat	$ 248	$ 496
14	**U6L2FG**	Worksurface Support Leg w/Glide	$ 197	$ 2758
2	**U6E2F**	Beam End Support Leg	$ 269	$ 538
24	**U6WBTF**	Worksurface Support Bracket	$ 55	$ 1320
10	**T624FB**	24"D Flat Brackets	$ 44	$ 440
			TOTAL	**$13,699**

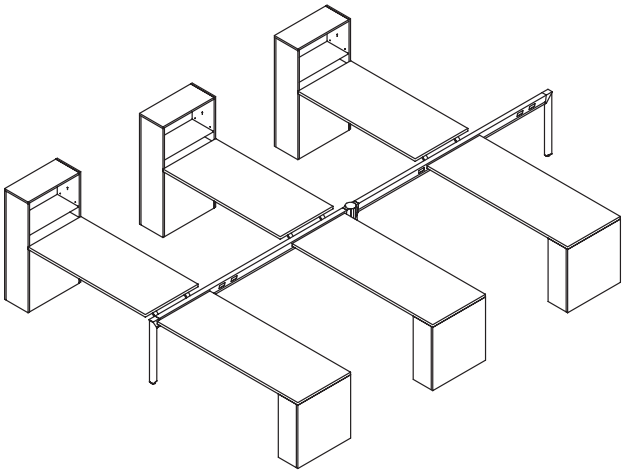

Example Shown (NOTE: Listing below does not include electrical components)

Qty	Model #	Description	List Price	Total
3	**U5F2772S**	27"D x 72"W Worksurface	$ 543	$1629
3	**Z5SC72**	60"W External Support Channel	$ 78	$ 234
3	**U5F2760S**	27"D x 60"W Worksurface	$ 463	$1389
1	**U6H2S**	Hub Non-Ported	$ 517	$ 517
1	**U3CHB2**	2 Beams to Hub Connector Kit	$ 228	$ 228
2	**U6B96DS222**	96"W Beam for Dual Sided Power A2-B2-A2	$ 878	$1756
2	**U6B96F**	96"W Beam Trim – Flat	$ 248	$ 496
2	**U6E2F**	Beam End Support Leg	$ 269	$ 538
12	**U6WBTF**	Worksurface Support Bracket	$ 55	$ 660
3	**U7P1027PBL**	28"H x 10"W x 27"D Open Support Pedestal – Left	$ 1262	$3786
3	**U7T501227ADR**	50"H Side Access Tower – RH Side Access	$ 2405	$7215
3	**Z6LB**	"L" Tower Bracket for 20"D or 24"D	$ 46	$ 138
			TOTAL	**$18,586**

- Maximum length is 60'.
- Maximum of two 96" long beams in parent run.
- Requires hubs for both end and mid run supports when perpendicular surfaces are used without storage or parent surfaces. Inline support leg cannot be used as the beam structure.
- When worksurface is attached perpendicular to the beam, two worksurface support brackets U6WBTF are required to attach worksurface to beam. Brackets cannot be more than 6" from edge of the worksurface.
- When one worksurface is parallel to beam and another is perpendicular, a flat bracket is required between the two surfaces and a worksurface support leg may not be required.
- When only perpendicular worksurfaces are specified supporting storage is required to add stability.
- Beam end legs can be used only when supporting storage is specified. Storage can be used to support either parent or perpendicular worksurfaces.
- When using angled J shaped worksurfaces three support legs U6L2FG are required for adequate support of the worksurface — two at the end of the surface and one at the outside corner.
- Beam mounted screens are allowed.
- Horizontal storage is allowed as long as worksurface stanchions have a surface to rest on.

Worksurfaces and Supports

120° Pinwheel — Beam Connected (Tethered) Worksurfaces or Freestanding

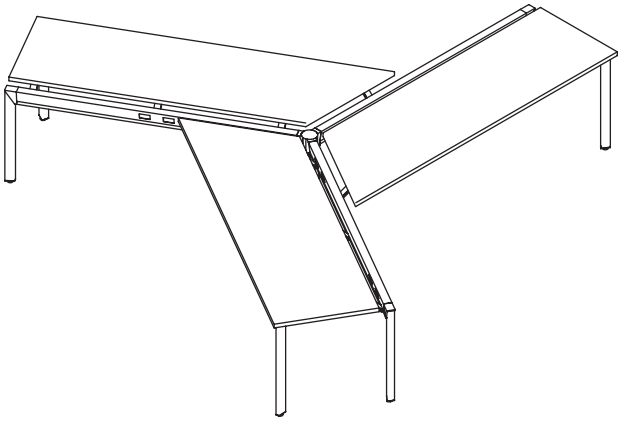

- Beam lengths match on module to short side of trapezoid surfaces only.
- Hub used in center of layout.
- Beams finished off with beam end leg or hub.
- Run off worksurface hand must be the opposite of the parent worksurface hand to match beam lengths.
- Horizontal storage allowed with no restrictions.
- When only 2 worksurfaces are tethered to beam structure, the beam with only diagonal worksurface edge tethered cannot overhang the worksurface by more than 6". A system leg can be used in place of the shortened beam if desired.
- Freestanding set ups require freestanding hub base kits (U6HB2L or U6HB3L) at all end locations (center hub does not require a freestanding base kit). Maximum individual beam length is 72" and no beam end legs are allowed.

Example Shown (NOTE: Listing below does not include electrical components)

Qty	Model #	Description	List Price	Total
3	**U5F27S7692TL**	27"D x 76¼" x 91⅞" Trapezoid – Left	$ 878	$ 2634
3	**Z5SC78**	66"W External Support Channel	$ 84	$ 252
1	**U6H2S**	Hub Non-Ported	$ 517	$ 517
1	**U3CHB3**	3 Beams to Hub Connector Kit	$ 259	$ 259
3	**U6B72DS222**	72"W Beam for Dual Sided Power A2-B2-A2	$ 568	$ 1704
3	**U6B72F**	72"W Beam Trim Flat	$ 207	$ 621
3	**U6L2FG**	Worksurface Support Leg w/Glide	$ 197	$ 591
3	**U6E2F**	Beam End Support Leg	$ 269	$ 807
12	**U6WBTF**	Worksurface Support Bracket	$ 55	$ 660
			TOTAL	**$8,045**

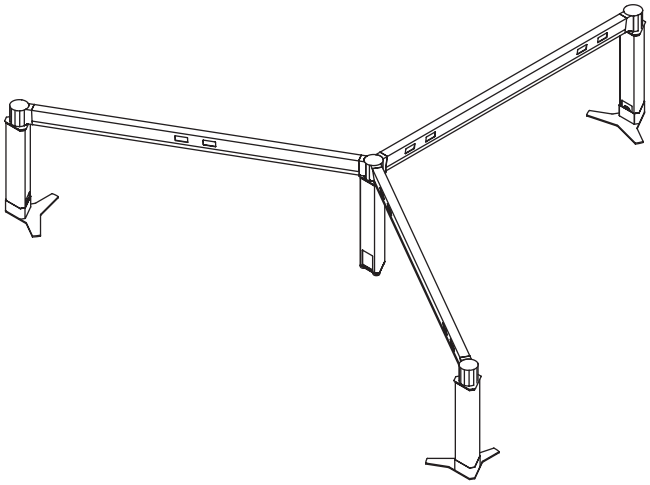

Example Shown (NOTE: Listing below does not include electrical components)

Qty	Model #	Description	List Price	Total
4	**U6H2S**	Hub Non-Ported	$ 517	$ 2068
3	**U6HB2L**	Hub Base Kit – 2 Feet w/leveling	$ 259	$ 777
1	**U3CHB3**	3 Beams to Hub Connector Kit	$ 259	$ 259
3	**U3CHB1**	1 Beam to Hub Connector Kit	$ 192	$ 576
3	**U6B72DS222**	72"W Beam for Dual Sided Power A2-B2-A2	$ 568	$ 1704
3	**U6B72F**	72"W Beam Trim Flat	$ 207	$ 621
			TOTAL	**$6,005**

120° Pinwheel — Beam Connected (Tethered) Worksurfaces or Freestanding

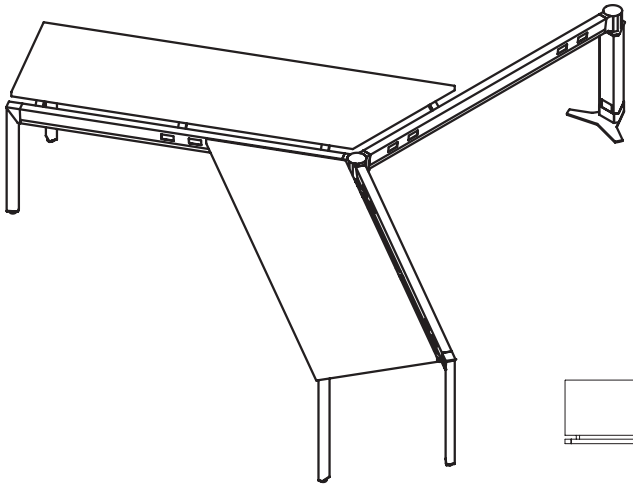

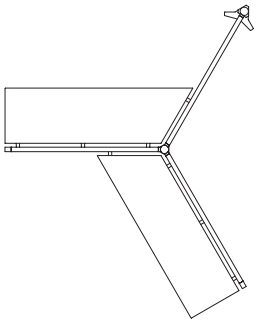

Example Shown (NOTE: Listing below does not include electrical components)

Qty	Model #	Description	List Price	Total
2	U5F27S7692TL	27"D x 76¼" x 91⅞" Trapezoid – Left	$ 878	$ 1756
2	Z5SC78	66"W External Support Channel	$ 84	$ 168
2	U6H2S	Hub Non-Ported	$ 517	$ 1034
1	U3CHB3	3 Beams to Hub Connector Kit	$ 259	$ 259
1	U3CHB1	1 Beam to Hub Connector Kit	$ 192	$ 192
1	U6HB2L	Hub Base Kit – 2 Feet w/leveling	$ 259	$ 259
3	U6B72DS222	72"W Beam for Dual Sided Power A2-B2-A2	$ 568	$ 1704
3	U6B72F	72"W Beam Trim – Flat	$ 207	$ 621
2	U6L2FG	Worksurface Support Leg w/Glide	$ 197	$ 394
2	U6E2F	Beam End Support Leg	$ 269	$ 538
8	U6WBTF	Worksurface Support Bracket	$ 55	$ 440
			TOTAL	$7,365

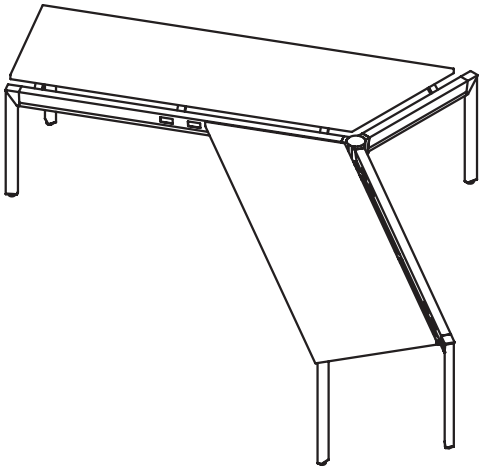

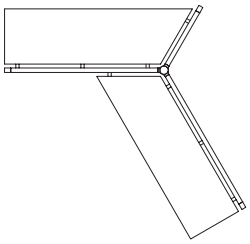

Example Shown (NOTE: Listing below does not include electrical components)

Qty	Model #	Description	List Price	Total
2	U5F27S7692TL	27"D x 76¼" x 91⅞" Trapezoid – Left	$ 878	$ 1756
2	Z5SC78	66"W External Support Channel	$ 84	$ 168
1	U6H2S	Hub Non-Ported	$ 517	$ 517
1	U3CHB3	3 Beams to Hub Connector Kit	$ 259	$ 259
2	U6B72DS222	72"W Beam for Dual Sided Power A2-B2-A2	$ 568	$ 1136
2	U6B72F	72"W Beam Trim – Flat	$ 207	$ 414
1	U6B30N	30"W Beam (Non-Powered)	$ 274	$ 274
1	U6B30F	30"W Beam Trim – Flat	$ 93	$ 93
2	U6L2FG	Worksurface Support Leg w/Glide	$ 197	$ 394
3	U6E2F	Beam End Support Leg	$ 269	$ 807
8	U6WBTF	Worksurface Support Bracket	$ 55	$ 440
			TOTAL	$6,258

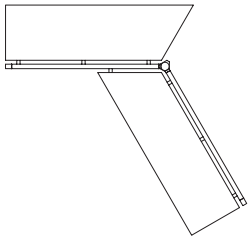

Example Shown (NOTE: Listing below does not include electrical components)

Qty	Model #	Description	List Price	Total
2	U5F27S7692TL	27"D x 76¼" x 91⅞" Trapezoid – Left	$ 878	$ 1756
2	Z5SC78	66"W External Support Channel	$ 84	$ 168
1	U6H2S	Hub Non-Ported	$ 517	$ 517
1	U3CHB3	3 Beams to Hub Connector Kit	$ 259	$ 259
2	U6B72DS222	72"W Beam for Dual Sided Power A2-B2-A2	$ 568	$ 1136
2	U6B72F	72"W Beam Trim – Flat	$ 207	$ 414
3	U6L2FG	Worksurface Support Leg w/Glide	$ 197	$ 591
2	U6E2F	Beam End Support Leg	$ 269	$ 538
7	U6WBTF	Worksurface Support Bracket	$ 55	$ 385
			TOTAL	$5,764

Worksurfaces and Supports

120° Dogbone — Beam Connected (Tethered) Worksurfaces

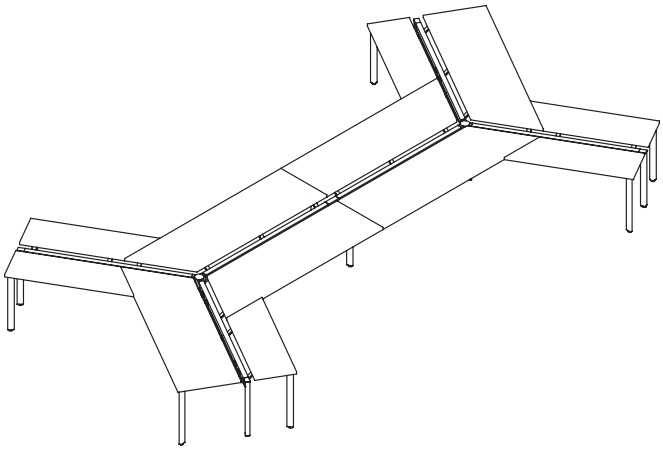

- No restrictions on overall length or individual beam length due to nature of set up.
- Inline leg requires hub at opposite end of connected beams unless supporting storage is within 6" of inline leg.
- Run off worksurface hand must be opposite the parent worksurface hand to match beam lengths.
- When run off surfaces are used in all location there is not restriction to beam lengths.
- If only primary surfaces are specified (no run offs) then the beam where only a diagonal edge is tethered cannot overhang worksurface by more than 6". A system leg can be used in place of the shortened beam.

Example Shown (NOTE: Listing below does not include electrical components)

Qty	Model #	Description	List Price	Total
4	**U5F27S7692TL**	27"D x 76¼" x 91⅞" Trapezoid – Left	$ 878	$ 3512
2	**U5F27S7692TR**	27"D x 76¼" x 91⅞" Trapezoid – Right	$ 878	$ 1756
6	**Z5SC72**	60"W External Support Channel	$ 78	$ 468
4	**U5F18E45RR**	18"D x 45" Trapezoid Runoff – Right	$ 378	$ 1512
2	**U5F18E45RL**	18"D x 45" Trapezoid Runoff – Left	$ 378	$ 756
2	**U6H2S**	Hub Non-Ported	$ 517	$ 1034
2	**U3CHB3**	3 Beams to Hub Connector Kit	$ 259	$ 518
6	**U6B72DS222**	72"W Beam for Dual Sided Power A2-B2-A2	$ 568	$ 3408
6	**U6B72F**	72"W Beam Trim Flat	$ 207	$ 1242
10	**U6L2FG**	Worksurface Support Leg w/Glide	$ 197	$ 1970
1	**U6S2F**	In-Line Beam Support Leg	$ 217	$ 217
1	**U6B06F**	6" Beam Trim - Flat	$ 62	$ 62
36	**U6WBTF**	Worksurface Support Bracket	$ 55	$ 1980
6	**T612FB**	12"D Flat Bracket	$ 39	$ 234
			TOTAL	**$ 18,669**

Freestanding Beams

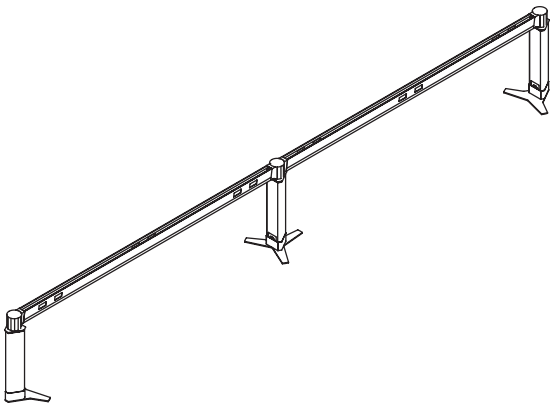

- Requires hubs for both end and mid run supports — inline support leg cannot be used as the beam structure.
- Freestanding base kit with leveling U6H2BL or U6HB3L are required for hubs, except at two-way 90°, three-way, or four-way connections.
- Minimum 54" long beam in a one beam with two hubs application.
- Minimum return run length is 36".
- No restrictions on maximum length for a freestanding beam.
- Maximum return run length using a beam end support leg is 36".
- Beam mounted glass screens are only allowed on freestanding beams between three- or four-way connections.
- Beam mounted fabric screens available in 13"H and 20"H.
- Horizontal storage cannot be used in a freestanding application.
- Use of hub is recommended on end of beams more than 36".

Example Shown (NOTE: Listing below does not include electrical components)

Qty	Model #	Description	List Price	Total
3	**U6H2S**	Hub Non-Ported	$ 517	$ 1551
1	**U3CHB2**	2 Beams to Hub Connector Kit	$ 228	$ 228
2	**U3CHB1**	1 Beam to Hub Connector Kit	$ 192	$ 384
2	**U6HB2L**	Hub Base Kit – 2 Feet with Leveling	$ 259	$ 518
1	**U6HB3L**	Hub Base Kit – 3 Feet with Leveling	$ 274	$ 274
2	**U6B96DS222**	96"W Beam for Dual Sided Power A2-B2-A2	$ 878	$ 1756
2	**U6B96F**	96"W Beam Trim – Flat	$ 248	$ 496
			TOTAL	$5,207

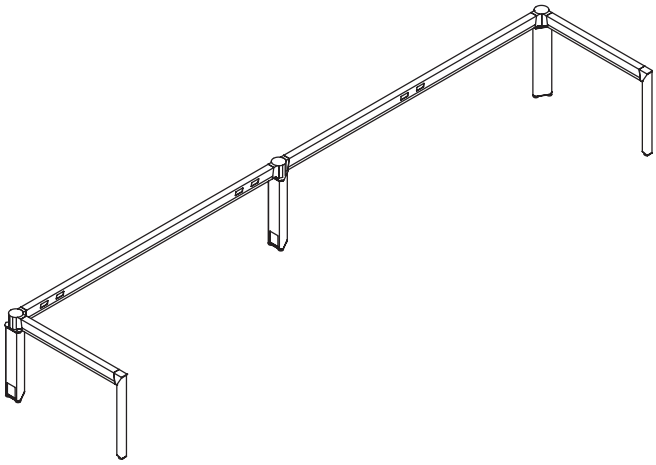

Example Shown (NOTE: Listing below does not include electrical components)

Qty	Model #	Description	List Price	Total
3	**U6H2S**	Hub Non-Ported	$ 517	$ 1551
3	**U3CHB2**	2 Beams to Hub Connector Kit	$ 228	$ 684
2	**U6B96DS222**	96"W Beam for Dual Sided Power A2-B2-A2	$ 878	$ 1756
2	**U6B96F**	96"W Beam Trim – Flat	$ 248	$ 496
2	**U6B36N**	36"W Beam Non-Powered	$ 315	$ 630
2	**U6B36F**	36"W Beam Trim – Flat	$ 99	$ 198
2	**U6E2F**	Beam End Support Leg	$ 269	$ 538
			TOTAL	$5,853

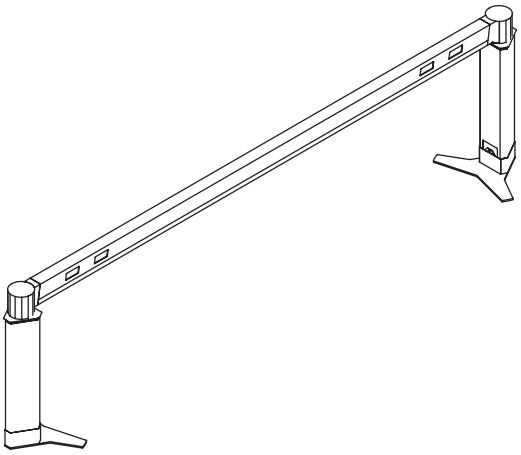

Example Shown (NOTE: Listing below does not include electrical components)

Qty	Model #	Description	List Price	Total
2	**U6H2S**	Hub Non-Ported	$ 517	$ 1034
2	**U3CHB1**	1 Beam to Hub Connector Kit	$ 192	$ 384
1	**U6B96DS222**	96"W Beam for Dual Sided Power A2-B2-A2	$ 878	$ 878
1	**U6B96F**	96"W Beam Trim – Flat	$ 248	$ 248
2	**U6HB2L**	Hub Base Kit – 2 Feet with Leveling	$ 259	$ 518
			TOTAL	$3,062

Altitude® Tables — See Seating, Collaboration, and Tables Price List

2- and 3-Stage Height-Adjustable Tables

Allsteel's new Altitude electric height-adjustable tables provide the perfect combination of functionality and user control.

The sit-to-stand adjustment encourages posture changes throughout the day and has been shown to increase workplace satisfaction and overall comfort. These easy-to-operate tables can accommodate different workstyles, making it an ideal solution for any work environment.

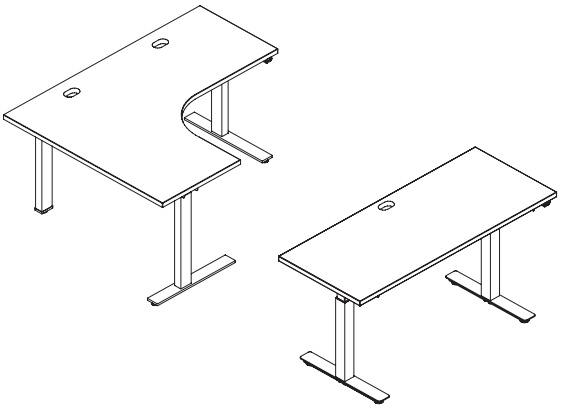

Worksurfaces

Further™ — Brackets and Supports

For specification information see pages 14-27.

Laminate

GSA SIN 711-1

U6WBTF

Z5SC72

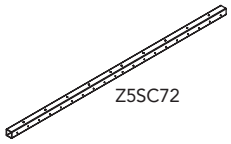

Description	Model	List Price
Worksurface Support Brackets		
Worksurface Support Bracket — Tethered fixed height	**U6WBTF** S	$ 55
External Worksurface Support Channel (no color option) — 1½"H		
30"W External Support Channel for 42"W Worksurface	**Z5SC42** S	$ 48
36"W External Support Channel for 48"W Worksurface	**Z5SC48** S	$ 51
42"W External Support Channel for 54"W Worksurface	**Z5SC54** S	$ 57
48"W External Support Channel for 60"W Worksurface or 66" Table	**Z5SC60**	$ 63
54"W External Support Channel for 66"W Worksurface or 72" Table	**Z5SC66**	$ 72
60"W External Support Channel for 72"W Worksurface or 78" Table	**Z5SC72**	$ 78
66"W External Support Channel for 78"W Worksurface	**Z5SC78**	$ 84
72"W External Support Channel for 84"W Worksurface	**Z5SC84**	$ 92

How to specify —

Select the Model Number from above.

1st Option:

Paint
(if applicable):

C S A

_ _ _ _ _ . _ _ _

Examples: **U6WBTF.P02** **U6WBTF.P7G** **Z5SC60**

S ***Shippable by small-package carrier.***

Worksurfaces

Further™ — Rectangular

For specification information see pages 14-27.

Laminate

GSA SIN 711-1

Flat Edge Detail

U5F2160S

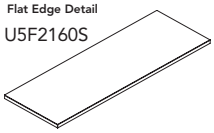

Description	Laminate w/Flat Edge Model	Beam Size	Laminate w/Flat Edge L1	L2	L3
21"D Rectangular Worksurfaces					
30"W	**U5F2130S**	24"W	$ 256	$ 268	$ 282
36"W	**U5F2136S**	30"W	$ 288	$ 302	$ 317
42"W	**U5F2142S**	36"W	$ 320	$ 335	$ 352
48"W	**U5F2148S**	42"W	$ 346	$ 364	$ 381
54"W	**U5F2154S**	48"W	$ 373	$ 392	$ 410
60"W	**U5F2160S**	54"W	$ 404	$ 425	$ 444
66"W	**U5F2166S**	60"W	$ 448	$ 471	$ 492
72"W	**U5F2172S**	66"W	$ 490	$ 515	$ 539
78"W	**U5F2178S**	72"W	$ 623	$ 654	$ 685
84"W	**U5F2184S**	78"W	$ 649	$ 681	$ 714
90"W	**U5F2190S**	84"W	$ 767	$ 805	$ 843
96"W	**U5F2196S**	90"W	$ 799	$ 839	$ 879

U5F2466S

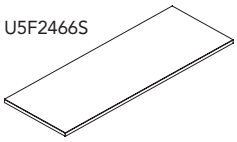

24"D Rectangular Worksurfaces (27" to center of beam)					
30"W	**U5F2430S**	24" Beam	$ 282	$ 296	$ 310
36"W	**U5F2436S**	30" Beam	$ 309	$ 324	$ 340
42"W	**U5F2442S**	36" Beam	$ 336	$ 353	$ 369
48"W	**U5F2448S**	42" Beam	$ 360	$ 378	$ 396
54"W	**U5F2454S**	48" Beam	$ 395	$ 415	$ 434
60"W	**U5F2460S**	54" Beam	$ 434	$ 456	$ 477
66"W	**U5F2466S**	60" Beam	$ 474	$ 498	$ 521
72"W	**U5F2472S**	66" Beam	$ 517	$ 543	$ 569
78"W	**U5F2478S**	72" Beam	$ 663	$ 696	$ 729
84"W	**U5F2484S**	76" Beam	$ 692	$ 726	$ 761
90"W	**U5F2490S**	84" Beam	$ 820	$ 861	$ 902
96"W	**U5F2496S**	90" Beam	$ 852	$ 894	$ 937

U5F2760S

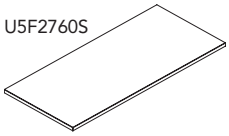

27"D Rectangular Worksurfaces					
30"W	**U5F2730S**	24"W	$ 309	$ 324	$ 340
36"W	**U5F2736S**	30"W	$ 330	$ 347	$ 363
42"W	**U5F2742S**	36"W	$ 352	$ 370	$ 387
48"W	**U5F2748S**	42"W	$ 373	$ 392	$ 410
54"W	**U5F2754S**	48"W	$ 416	$ 437	$ 457
60"W	**U5F2760S**	54"W	$ 463	$ 486	$ 509
66"W	**U5F2766S**	60"W	$ 500	$ 525	$ 550
72"W	**U5F2772S**	66"W	$ 543	$ 570	$ 598
78"W	**U5F2778S**	72"W	$ 703	$ 738	$ 773
84"W	**U5F2784S**	78"W	$ 735	$ 772	$ 808
90"W	**U5F2790S**	84"W	$ 873	$ 916	$ 961
96"W	**U5F2796S**	90"W	$ 905	$ 950	$ 996

How to specify —	*1st Option:*	*2nd Option:*
Select the Model Number from above.	**Laminate** *(if applicable)*:	**Edge** *(if applicable)*:
U 5 F _ _ _ _ S . _ _ _ _ .		_ _

Examples: **U5F2130S.LM11.EV** **U5F2730S.LWBR.DB** **Z5SC60.P02**

S *Shippable by small-package carrier.*

Worksurfaces

Further™ — 21"D Trapezoid and Runoffs

For specification information see pages 14-27.

Laminate

GSA SIN 711-1

Flat Edge Detail

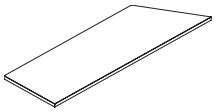

"L" Left

"R" Right

Description	Beam Size	Laminate w/Flat Edge Model — Add suffix "L" or "R"	Laminate w/Flat Edge L1	L2	L3
21"D Trapezoid Worksurfaces (24" to center of beam)					
28¼"W Back / 40⅜"W Front	24" Beam	**U5F21S2840T** ⊔	$ 346	$ 364	$ 381
34¼"W Back / 46⅜"W Front	30" Beam	**U5F21S3446T** ⊔	$ 373	$ 392	$ 410
40¼"W Back / 52⅜"W Front	36" Beam	**U5F21S4052T** ⊔	$ 426	$ 448	$ 468
46¼"W Back / 58⅜"W Front	42" Beam	**U5F21S4658T** ⊔	$ 453	$ 476	$ 498
52¼"W Back / 64⅜"W Front	48" Beam	**U5F21S5264T** ⊔	$ 480	$ 504	$ 527
58¼"W Back / 70⅜"W Front	54" Beam	**U5F21S5870T** ⊔	$ 505	$ 530	$ 556
64¼"W Back / 76⅜"W Front	60" Beam	**U5F21S6476T** ⊔	$ 639	$ 671	$ 703
70¼"W Back / 82⅜"W Front	66" Beam	**U5F21S7082T** ⊔	$ 745	$ 782	$ 819
76¼"W Back / 88⅜"W Front	72" Beam	**U5F21S7688T** ⊔	$ 824	$ 865	$ 907
82¼"W Back / 94⅜"W Front	78" Beam	**U5F21S8294T** ⊔	$ 878	$ 922	$ 966

NOTE: Add suffix "L" for Left- or "R" for Right-handed version of worksurface. (See illustration)
Examples: **U5F21S2840TL** **U5F21S2840TR**

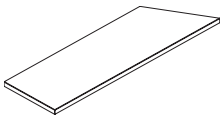

"L" Left

"R" Right

15"D Runoff Worksurfaces for use with 21"D Trapezoids					
22"W	42" Beam	**U5F15C22R** ⊔	$ 218	$ 229	$ 240
28"W	48" Beam	**U5F15C28R** ⊔	$ 240	$ 252	$ 264
34"W	54" Beam	**U5F15C34R** ⊔	$ 261	$ 274	$ 287
40"W	60" Beam	**U5F15C40R** ⊔	$ 282	$ 296	$ 310
46"W	66" Beam	**U5F15C46R** ⊔	$ 304	$ 319	$ 334
52"W	72" Beam	**U5F15C52R** ⊔	$ 325	$ 342	$ 357
58"W	78" Beam	**U5F15C58R** ⊔	$ 346	$ 364	$ 381

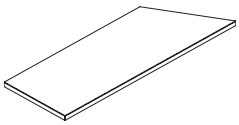

"L" Left

"R" Right

18"D Runoff Worksurfaces for use with 21"D Trapezoids					
22"W	42" Beam	**U5F18C22R** ⊔	$ 245	$ 257	$ 270
28"W	48" Beam	**U5F18C28R** ⊔	$ 267	$ 280	$ 294
34"W	54" Beam	**U5F18C34R** ⊔	$ 288	$ 302	$ 317
40"W	60" Beam	**U5F18C40R** ⊔	$ 309	$ 324	$ 340
46"W	66" Beam	**U5F18C46R** ⊔	$ 330	$ 347	$ 363
52"W	72" Beam	**U5F18C52R** ⊔	$ 352	$ 370	$ 387
58"W	78" Beam	**U5F18C58R** ⊔	$ 373	$ 392	$ 410

How to specify —	*1st Option:*	*2nd Option:*
Select the Model Number from above.	**Laminate:**	**Edge:**

Suffix
L Left-handed
R Right-handed

U 5 F _ _ _ _ _ _ _ _ _ _ . _ _ _ _ . _ _

Examples: **U5F21S2840TL.LM11.EV** **U5F15C22RL.LM11.EV**

Worksurfaces

Further™ — 24"D Trapezoid and Runoffs

For specification information see pages 14-27.

Laminate

GSA SIN 711-1

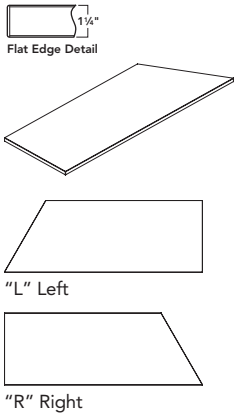

Description	Beam Size	Laminate w/Flat Edge Model — Add suffix "L" or "R"		Laminate w/Flat Edge L1	L2	L3
24"D Trapezoid Worksurfaces (27"D to center of beam)						
28"W Back / 42"W Front	24" Beam	**U5F24S2842T** ⊔	S	$ 373	$ 392	$ 410
34"W Back / 48"W Front	30" Beam	**U5F24S3448T** ⊔	S	$ 400	$ 420	$ 440
40"W Back / 54"W Front	36" Beam	**U5F24S4054T** ⊔	S	$ 453	$ 476	$ 498
46"W Back / 60"W Front	42" Beam	**U5F24S4660T** ⊔	S	$ 480	$ 504	$ 527
52"W Back / 66"W Front	48" Beam	**U5F24S5266T** ⊔	S	$ 506	$ 531	$ 557
58"W Back / 72"W Front	54" Beam	**U5F24S5872T** ⊔	S	$ 532	$ 559	$ 586
64"W Back / 78"W Front	60" Beam	**U5F24S6478T** ⊔	S	$ 665	$ 698	$ 731
70"W Back / 84"W Front	66" Beam	**U5F24S7084T** ⊔	S	$ 772	$ 810	$ 849
76"W Back / 90"W Front	72" Beam	**U5F24S7690T** ⊔	S	$ 851	$ 893	$ 936

NOTE: Add suffix "L" for Left- or "R" for Right-handed version of worksurface. (See illustration)

Examples: **U5F24S2842TL** **U5F24S2842TR**

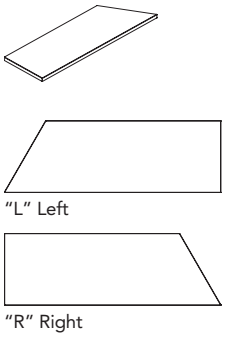

15"D Runoff Worksurfaces for 24"D Trapezoids						
19"W	42" Beam	**U5F15D19R** ⊔	S	$ 232	$ 243	$ 255
25"W	48" Beam	**U5F15D25R** ⊔	S	$ 253	$ 265	$ 279
31"W	54" Beam	**U5F15D31R** ⊔	S	$ 274	$ 287	$ 302
37"W	60" Beam	**U5F15D37R** ⊔	S	$ 296	$ 310	$ 326
43"W	66" Beam	**U5F15D43R** ⊔	S	$ 317	$ 332	$ 349
49"W	72" Beam	**U5F15D49R** ⊔	S	$ 338	$ 355	$ 372
55"W	78" Beam	**U5F15D55R** ⊔	S	$ 360	$ 378	$ 396

NOTE: Add suffix "L" for Left- or "R" for Right-handed version of worksurface. (See illustration)

Examples: **U5F15D19RL** **U5F15D19RR**

Use Left Runoff with Right Trapezoid worksurfaces; and Right Runoff with Left Trapezoid worksurfaces.

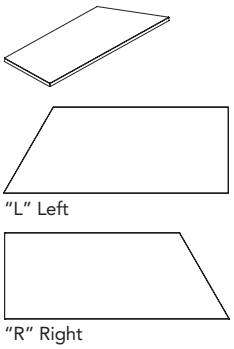

18"D Runoff Worksurfaces for 24"D Trapezoids						
19"W	42" Beam	**U5F18D19R** ⊔	S	$ 259	$ 272	$ 285
25"W	48" Beam	**U5F18D25R** ⊔	S	$ 280	$ 294	$ 308
31"W	54" Beam	**U5F18D31R** ⊔	S	$ 301	$ 316	$ 331
37"W	60" Beam	**U5F18D37R** ⊔	S	$ 323	$ 340	$ 355
43"W	66" Beam	**U5F18D43R** ⊔	S	$ 343	$ 361	$ 377
49"W	72" Beam	**U5F18D49R** ⊔	S	$ 365	$ 384	$ 401
55"W	78" Beam	**U5F18D55R** ⊔	S	$ 387	$ 407	$ 425

NOTE: Add suffix "L" for Left- or "R" for Right-handed version of worksurface. (See illustration)

Examples: **U5F18D19RL** **U5F18D19RR**

Use Left Runoff with Right Trapezoid worksurfaces; and Right Runoff with Left Trapezoid worksurfaces.

How to specify —	*1st Option:*	*2nd Option:*
Select the Model Number from above.	**Laminate:**	**Edge:**

Suffix
L Left-handed
R Right-handed

U 5 F _____ . _____ . ___

Examples: **U5F24S2842TL.LM11.EV** **U5F15D19RR.LWBR.DB**

S *Shippable by small-package carrier.*

Worksurfaces

Further™ — 27"D Trapezoids and Runoffs

For specification information see pages 14-27.

Laminate

GSA SIN 711-1

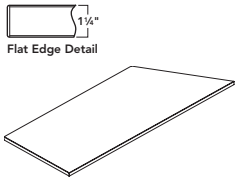

Flat Edge Detail

"L" Left

"R" Right

Description	Beam Size	Laminate w/Flat Edge Model — Add suffix "L" or "R"	Laminate w/Flat Edge L1	L2	L3
27"D Trapezoid Worksurfaces (30" to center of beam)					
28¼"W Back / 43⅞"W Front	24" Beam	**U5F27S2844T** ⊔	$ 399	$ 419	$ 439
34¼"W Back / 49⅞"W Front	30" Beam	**U5F27S3450T** ⊔	$ 426	$ 448	$ 468
40¼"W Back / 55⅞"W Front	36" Beam	**U5F27S4056T** ⊔	$ 480	$ 504	$ 527
46¼"W Back / 61⅞"W Front	42" Beam	**U5F27S4662T** ⊔	$ 505	$ 530	$ 556
52¼"W Back / 67⅞"W Front	48" Beam	**U5F27S5268T** ⊔	$ 532	$ 559	$ 586
58¼"W Back / 73⅞"W Front	54" Beam	**U5F27S5874T** ⊔	$ 559	$ 587	$ 615
64¼"W Back / 79⅞"W Front	60" Beam	**U5F27S6480T** ⊔	$ 692	$ 727	$ 761
70¼"W Back / 85⅞"W Front	66" Beam	**U5F27S7086T** ⊔	$ 799	$ 839	$ 879
76¼"W Back / 91⅞"W Front	72" Beam	**U5F27S7692T** ⊔	$ 878	$ 922	$ 966

NOTE: Add suffix "L" for Left- or "R" for Right-handed version of worksurface. (See illustration)
Examples: **U5F27S2840TL** **U5F27S2840TR**

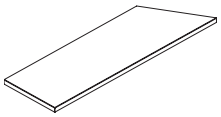

"L" Left

"R" Right

15"D Runoff Worksurfaces for use with 27"D Trapezoids					
15"W	42" Beam	**U5F15E15R** ⊔	$ 245	$ 257	$ 270
21"W	48" Beam	**U5F15E21R** ⊔	$ 267	$ 280	$ 294
27"W	54" Beam	**U5F15E27R** ⊔	$ 288	$ 302	$ 317
33"W	60" Beam	**U5F15E33R** ⊔	$ 309	$ 324	$ 340
39"W	66" Beam	**U5F15E39R** ⊔	$ 330	$ 347	$ 363
45"W	72" Beam	**U5F15E45R** ⊔	$ 352	$ 370	$ 387
51"W	78" Beam	**U5F15E51R** ⊔	$ 373	$ 392	$ 410

NOTE: Add suffix "L" for Left- or "R' for Right-handed version of worksurface. (See illustration)

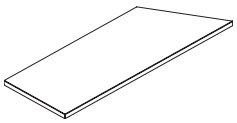
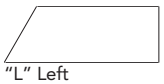
"L" Left

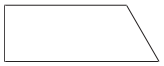
"R" Right

18"D Runoff Worksurfaces for use with 27"D Trapezoids					
15"W	42" Beam	**U5F18E15R** ⊔	$ 272	$ 285	$ 299
21"W	48" Beam	**U5F18E21R** ⊔	$ 293	$ 307	$ 322
27"W	54" Beam	**U5F18E27R** ⊔	$ 314	$ 329	$ 345
33"W	60" Beam	**U5F18E33R** ⊔	$ 335	$ 352	$ 368
39"W	66" Beam	**U5F18E39R** ⊔	$ 357	$ 375	$ 393
45"W	72" Beam	**U5F18E45R** ⊔	$ 378	$ 397	$ 416
51"W	78" Beam	**U5F18E51R** ⊔	$ 399	$ 419	$ 439

NOTE: Add suffix "L" for Left- or "R" for Right-handed version of worksurface. (See illustration)

How to specify —	*1st Option:*	*2nd Option:*
Select the Model Number from above.	**Laminate:**	**Edge:**

Suffix
L Left-handed
R Right-handed

U 5 F _ _ _ _ _ _ _ _ _ _ . _ _ _ _ . _ _

Examples: **U5F21S2840TL.LM11.EV** **U5F18E21RR.LWBR.DB**

Worksurfaces

Further™ — Symmetrical Trapezoids and 120°

For specification information see pages 14-27.

Laminate

GSA SIN 711-1

Flat Edge Detail

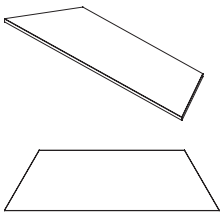
U5F21S5175TS

Description	Beam Size	Laminate w/Flat Edge Model		Laminate w/Flat Edge L1	L2	L3
21"D Symmetrical Trapezoid Worksurfaces (24"D to center of beam)						
39"W Back / 63"W Front	36" Beam	**U5F21S3963TS**	S	$ 447	$ 470	$ 491
45"W Back / 69"W Front	42" Beam	**U5F21S4569TS**	S	$ 473	$ 497	$ 520
51"W Back / 75"W Front	48" Beam	**U5F21S5175TS**	S	$ 500	$ 525	$ 550
57"W Back / 81"W Front	54" Beam	**U5F21S5781TS**	S	$ 526	$ 552	$ 579
63"W Back / 87"W Front	60" Beam	**U5F21S6387TS**	S	$ 659	$ 692	$ 725
69"W Back / 93"W Front	66" Beam	**U5F21S6993TS**	S	$ 766	$ 804	$ 842

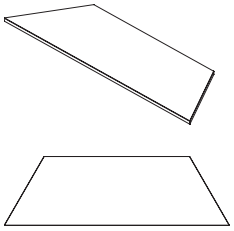
U5F24S5178TS

24"D Symmetrical Trapezoid Worksurfaces (27"D to center of beam)						
39"W Back / 66"W Front	36" Beam	**U5F24S3966TS**	S	$ 473	$ 497	$ 520
45"W Back / 72"W Front	42" Beam	**U5F24S4572TS**	S	$ 500	$ 525	$ 550
51"W Back / 78"W Front	48" Beam	**U5F24S5178TS**	S	$ 527	$ 553	$ 580
57"W Back / 84"W Front	54" Beam	**U5F24S5784TS**	S	$ 553	$ 581	$ 609
63"W Back / 90"W Front	60" Beam	**U5F24S6390TS**	S	$ 686	$ 720	$ 754
69"W Back / 96"W Front	66" Beam	**U5F24S6996TS**	S	$ 790	$ 829	$ 870

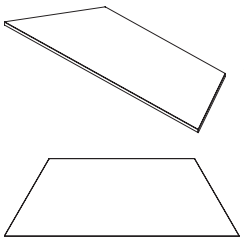
U5F27S5182TS

27"D Symmetrical Trapezoid Worksurfaces (30"D to center of beam)						
39"W Back / 70"W Front	36" Beam	**U5F27S3970TS**	S	$ 500	$ 525	$ 550
45"W Back / 76"W Front	42" Beam	**U5F27S4576TS**	S	$ 526	$ 552	$ 579
51"W Back / 82"W Front	48" Beam	**U5F27S5182TS**	S	$ 553	$ 581	$ 609
57"W Back / 88"W Front	54" Beam	**U5F27S5788TS**	S	$ 580	$ 609	$ 638
63"W Back / 94"W Front	60" Beam	**U5F27S6394TS**	S	$ 713	$ 749	$ 784

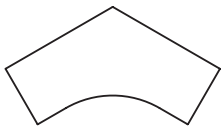
U5F244646C

21"D 120° Worksurfaces (24"D to center of beam)					
46¼"W Back Left and Right	42" Beam	**U5F214646C**	$ 620	$ 651	$ 682
52¼"W Back Left and Right	48" Beam	**U5F215252C**	$ 672	$ 706	$ 739
24"D 120° Worksurfaces (27"D to center of beam)					
46¼"W Back Left and Right	42" Beam	**U5F244646C**	$ 635	$ 667	$ 699
52¼"W Back Left and Right	48" Beam	**U5F245252C**	$ 692	$ 727	$ 761
27"D 120° Worksurfaces (30"D to center of beam)					
46¼"W Back Left and Right	42" Beam	**U5F274646C**	$ 651	$ 684	$ 716
52¼"W Back Left and Right	48" Beam	**U5F275252C**	$ 713	$ 749	$ 784

How to specify —	*1st Option:*	*2nd Option:*
Select the Model Number from above.	**Laminate:**	**Edge:**

U 5 F _ _ _ _ _ _ _ _ . _ _ _ _ . _ _

Examples: **U5F21S3963TS.LM11.EV** **U5F24S3966TS.LWBR.DB**

S *Shippable by small-package carrier.*

Worksurface Supports

Further™ — Hub and Components

For specification information see pages 14-27.

Painted Metal

GSA SIN 711-1

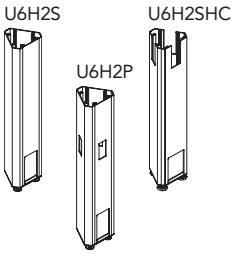

Description	Model	List Price Core	List Price Select	List Price Accent
Hub — Seated Height				
Hub Non-Ported	U6H2S S	$ 517	$ 532	$ 553
High Capacity Hub	U6H2SHC S	$ 543	$ 558	$ 579
Collaborative Hub Ported (3 Side Ports)	U6H2P S	$ 568	$ 583	$ 604

NOTE: Order electrical components separately on pages 48-50.

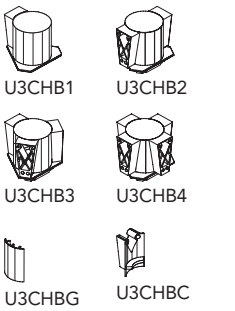

Hub to Beam Connectors — configure as needed, see page 10				
1 Beam to Hub Connector Kit with Top Trim and Hub Gap Filler	U3CHB1 S	$ 192	$ 202	$ 233
2 Beams to Hub Connector Kit with Top Trim and Hub Gap Filler	U3CHB2 S	$ 228	$ 238	$ 269
3 Beams to Hub Connector Kit with Top Trim and Hub Gap Filler	U3CHB3 S	$ 259	$ 269	$ 300
4 Beams to Hub Connector Kit with Top Trim and Hub Gap Filler	U3CHB4 S	$ 274	$ 284	$ 315
Connector Gap Filler (3 pack) — fills 90° of Hub Connector*	U3CHBG S	$ 52	$ 55	$ 60
Connector Block — fills 90° of Hub Connector*	U3CHBC S	$ 68	$ 71	$ 76

*Order ala carte to aid in reconfiguration of hub connector kit.

Hub Top Trim				
Split Top Trim (Round with slot for mounting Screens)	U3THCS S	$ 99	$ 102	$ 107

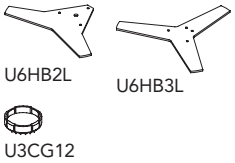

Hub Base Kits and Anchors				
Hub Base Kit — 2 Feet with leveling	U6HB2L S	$ 259	$ 269	$ 285
Hub Base Kit — 3 Feet with leveling	U6HB3L S	$ 274	$ 284	$ 300
Carpet Grippers – 12 pack	U3CG12 S	$ 16	N/A	N/A

How to specify —	*1st Option:*
Select the Model Number from above.	**Paint** *(if applicable)*: C S A

Examples: **U6H2S.P02** **U3CHB1.P7B**

S *Shippable by small-package carrier.*

Worksurface Supports

Further™ — Beams

For specification information see pages 14-27.

Painted Metal

GSA SIN 711-1

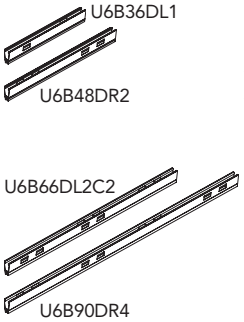

Description	Model Add "L" for Left or "R" for Right	Applicable Beam Power Kit Model*	List Price Core	Select	Accent
Beams for Dual Sided Power — Left or Right-Hand					
36" Left "L" or Right "R" A1-B1	**U6B36D ⊔ 1** S	U8K36DE1	$ 331	$ 338	$ 350
42" Left "L" or Right "R" A1-B1	**U6B42D ⊔ 1** S	U8K42DE1	$ 362	$ 369	$ 381
48" Left "L" or Right "R" A2-B2	**U6B48D ⊔ 2** S	U8K48DE2	$ 393	$ 403	$ 419
54" Left "L" or Right "R" A2-B2	**U6B54D ⊔ 2** S	U8K54DE2	$ 434	$ 444	$ 460
60" Left "L" or Right "R" A2-B2	**U6B60D ⊔ 2** S	U8K60DE2	$ 475	$ 487	$ 506
66" Left "L" or Right "R" A2-2-B2	**U6B66D ⊔ 2C2** S	U8K66D222	$ 517	$ 529	$ 548
72" Left "L" or Right "R" A2-2-B2	**U6B72D ⊔ 2C2** S	U8K72D222	$ 568	$ 582	$ 604
78" Left "L" or Right "R" A2-2-B2	**U6B78D ⊔ 2C2** S	U8K78D222	$ 697	$ 711	$ 733
84" Left "L" or Right "R" A2-2-B2	**U6B84D ⊔ 2C2** S	U8K84D222	$ 775	$ 792	$ 816
90" Left "L" or Right "R" A2-B2-A2-B2	**U6B90D ⊔ 4** S	U8K90DE4	$ 826	$ 843	$ 867
96" Left "L" or Right "R" A2-B2-A2-B2	**U6B96D ⊔ 4** S	U8K96DE4	$ 878	$ 897	$ 924

*Order applicable Beam Power Kit separately — see page 36.

Beam Electrical Covers		Chicago Code Model			
2 Pack	**USBEC2** S	**USBEC2CH**	$ 37	$ 37	$ 37
12 Pack	**USBEC12** S	**USBEC12CH**	$ 130	$ 130	$ 130

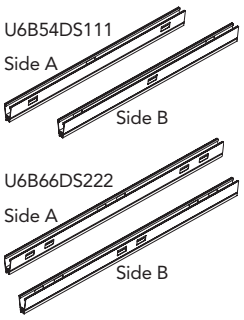

Description	Model	Applicable Beam Power Kit Model*	List Price Core	Select	Accent
Beams for Dual Sided Power — Side A Left/Right and Side B Centered					
54" A1-B1-A1	**U6B54DS111** S	U8K54DS111	$ 434	$ 444	$ 460
60" A1-B1-A1	**U6B60DS111** S	U8K60DS111	$ 475	$ 487	$ 506
66" A2-B2-A2	**U6B66DS222** S	U8K66D222	$ 517	$ 529	$ 548
72" A2-B2-A2	**U6B72DS222** S	U8K72D222	$ 568	$ 582	$ 604
78" A2-B2-A2	**U6B78DS222** S	U8K78D222	$ 697	$ 711	$ 733
84" A2-B2-A2	**U6B84DS222** S	U8K84D222	$ 775	$ 792	$ 816
90" A2-B2-A2	**U6B90DS222** S	U8K90D222	$ 826	$ 843	$ 867
96" A2-B2-A2	**U6B96DS222** S	U8K96D222	$ 878	$ 897	$ 924

*Order applicable Beam Power Kit separately — see page 36.

Beams (Non-Ported)				
18"	**U6B18N** S	$ 186	$ 191	$ 199
21"	**U6B21N** S	$ 210	$ 215	$ 223
24"	**U6B24N** S	$ 233	$ 238	$ 246
30"	**U6B30N** S	$ 274	$ 279	$ 287
36"	**U6B36N** S	$ 315	$ 322	$ 334
42"	**U6B42N** S	$ 346	$ 353	$ 365
48"	**U6B48N** S	$ 377	$ 387	$ 403
54"	**U6B54N** S	$ 419	$ 429	$ 445
60"	**U6B60N** S	$ 460	$ 472	$ 491
66"	**U6B66N**	$ 501	$ 513	$ 532
72"	**U6B72N**	$ 543	$ 557	$ 579
78"	**U6B78N**	$ 594	$ 608	$ 630
84"	**U6B84N**	$ 672	$ 689	$ 713
90"	**U6B90N**	$ 749	$ 766	$ 790
96"	**U6B96N**	$ 826	$ 845	$ 872

Cantilevered Beams				
6" Cantilevered Beam	**U6B06CN** S	$ 114	$ 119	$ 127
9" Cantilevered Beam	**U6B09CN** S	$ 124	$ 129	$ 137
12" Cantilevered Beam	**U6B12CN** S	$ 135	$ 140	$ 148

How to specify —

Select the Model Number from above.

U _ _ _ _ _ _ _ . _ _ _

1st Option:

Paint:

C S A

Examples: **U6B36DL1.P02** **U6B66DL2C2.P7B** **U6B90DL4.P02** **U6B24N.P02** **U6B06CN.P02**

S ***Shippable by small-package carrier.***

Worksurface Supports

Further™ — Beam Trim

For specification information see pages 14-27.

Painted Metal

GSA SIN 711-1

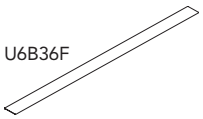

U6B36F

Description	Model	Chicago Code Trim Models	List Price Core	List Price Select	List Price Accent
Beam Trim — Flat					
6"	U6B06F S		$ 62	$ 64	$ 67
9"	U6B09F S		$ 68	$ 73	$ 81
12"	U6B12F S		$ 68	$ 73	$ 81
18"	U6B18F S		$ 83	$ 88	$ 96
21"	U6B21F S		$ 86	$ 91	$ 99
24"	U6B24F S		$ 88	$ 93	$ 101
30"	U6B30F S		$ 93	$ 98	$ 106
36"	U6B36F S		$ 99	$ 105	$ 114
42"	U6B42F S		$ 104	$ 110	$ 119
48"	U6B48F S		$ 109	$ 117	$ 130
54"	U6B54F S		$ 114	$ 122	$ 135
60"	U6B60F S		$ 119	$ 129	$ 145
66"	U6B66F S		$ 197	$ 207	$ 223
72"	U6B72F S		$ 207	$ 219	$ 238
78"	U6B78F S		$ 233	$ 245	$ 264
84"	U6B84F S		$ 238	$ 252	$ 274
90"	U6B90F S		$ 243	$ 257	$ 279
96"	U6B96F		$ 248	$ 265	$ 289

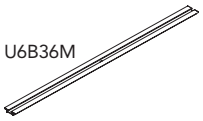

U6B36M

Beam Trim for Mounting Screens and Storage		Chicago Code			
6"	U6B06M S		$ 83	$ 85	$ 88
9"	U6B09M S		$ 88	$ 93	$ 101
12"	U6B12M S		$ 88	$ 93	$ 101
18"	U6B18M S		$ 109	$ 114	$ 122
24"	U6B24M S		$ 114	$ 119	$ 127
30"	U6B30M S		$ 119	$ 124	$ 132
36"	U6B36M S	U6B36MCH S	$ 130	$ 136	$ 145
42"	U6B42M S	U6B42MCH S	$ 135	$ 141	$ 150
48"	U6B48M S	U6B48MCH S	$ 140	$ 148	$ 161
54"	U6B54M S	U6B54MCH S	$ 145	$ 153	$ 166
60"	U6B60M S	U6B60MCH S	$ 150	$ 160	$ 176
66"	U6B66M S	U6B66MCH S	$ 238	$ 248	$ 264
72"	U6B72M S	U6B72MCH S	$ 264	$ 276	$ 295
78"	U6B78M S	U6B78MCH S	$ 284	$ 296	$ 315
84"	U6B84M S	U6B84MCH S	$ 290	$ 304	$ 326
90"	U6B90M S	U6B90MCH S	$ 295	$ 309	$ 331
96"	U6B96M S	U6B96MCH S	$ 300	$ 317	$ 341

U3THCS

Hub Trim					
Split Trim for mounting Screens	U3THCS S		$ 99	$ 102	$ 107

Description	Model	List Price
Beam Trim Filler		
12" Trim Filler Strip	U6B12MGF S	$ 26
60" Trim Filler Strip	U6B60MGF S	$ 99

How to specify —

Select the Model Number from above.

1st Option:

Paint
(if applicable):

C S A

U _ _ _ _ _ . _ _ _

Examples: **U6B06F.P02** **U6B06M.P7B** **U6B12MGF**

S ***Shippable by small-package carrier.***

Worksurface Supports

For specification information see pages 14-27.

Painted Metal

GSA SIN 711-1

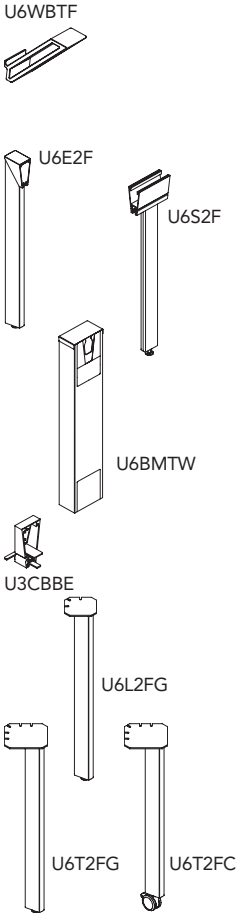

Description	Model	List Price Core	List Price Select	List Price Accent
Worksurface Support Brackets				
Worksurface Support Bracket — Tethered fixed height	U6WBTF S	$ 55	N/A	N/A
Beam Legs — Seated Height				
Beam End Support Leg — Adds 3" to run	U6E2F S	$ 269	$ 281	$ 295
In-Line Beam Support Leg — Adds 6" to run	U6S2F S	$ 217	$ 232	$ 248
Beam Wall Mount — Adds 3" to run				
Attaches Beam Run to Wall — requires attachment to stud in wall	U6BMTW S	$ 310	$ 325	$ 346
Beam Connector				
Bench End Connector Kit	U3CBBE S	$ 62	$ 65	$ 70
Worksurface Leg — Seated Height				
Worksurface Support Leg w/Glide	U6L2FG S	$ 197	$ 209	$ 223
Table Legs — Seated Height				
Table Support Leg w/Glide	U6T2FG S	$ 212	$ 224	$ 238
Table Support Leg w/Caster	U6T2FC S	$ 212	$ 224	$ 238
Flat Brackets (no color option)				
For 12"D	T612FB S	$ 39	N/A	N/A
For 24"D	T624FB S	$ 44	N/A	N/A
For 30"D	T630FB S	$ 51	N/A	N/A
Ganging Brackets with Screws (no color option)				
2 Ganging Links	AW4GANG S	$ 55	N/A	N/A

How to specify —

Select the Model Number from above.

1st Option:

Paint
(if applicable):

C S A

Examples: **U6WBTF.P7B** **U6E2F.P02** **T612FB**

S ***Shippable by small-package carrier.***

Electrical

Further features capabilities for cable management, including electrical, voice, and data. The 8-wire electrical system can be integrated within beams. Voice and data cables are routed horizontally using beam mounted wire managers. The hub allows voice and data cables to be routed both vertically.

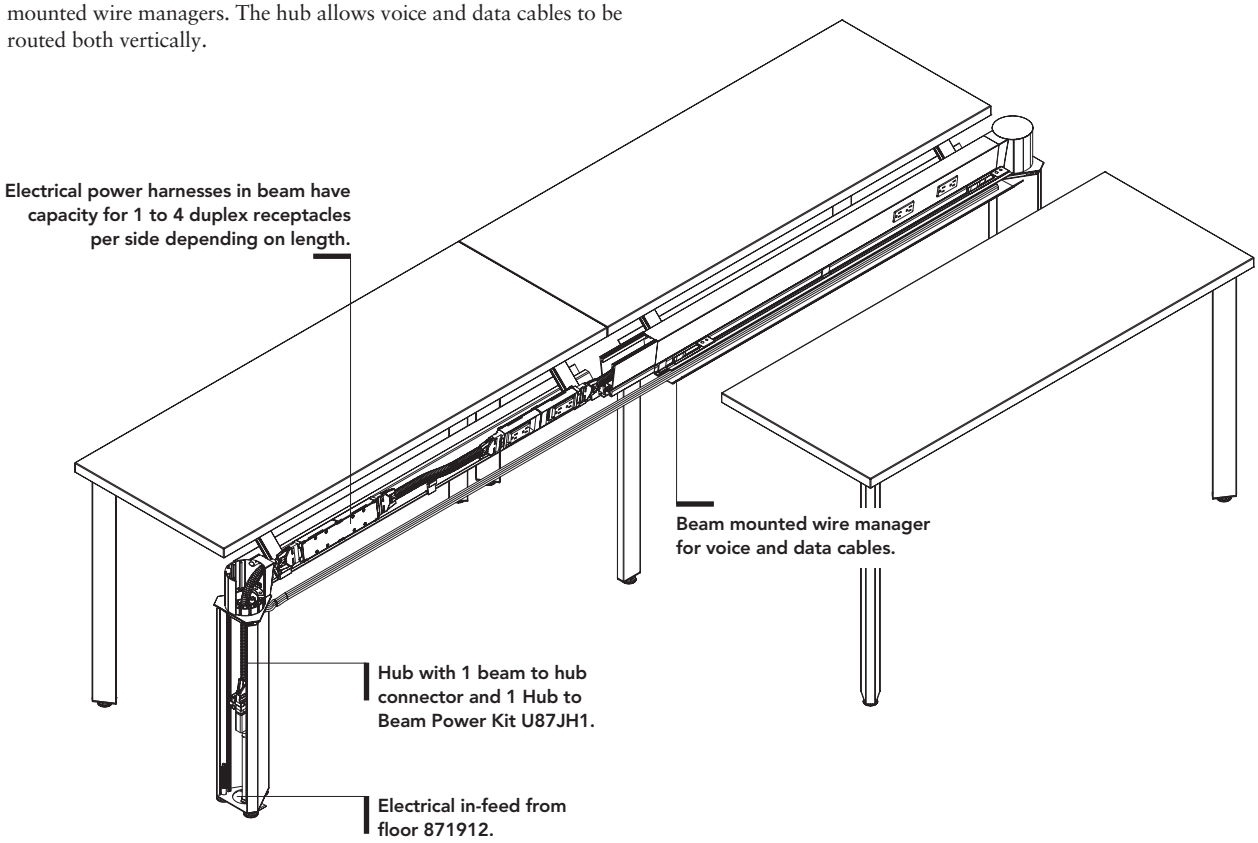

Further Electrical Systems

The electrical system for Further offers two options: four circuit, 3+1; or four circuit, 2+2. Both systems utilize an 8-wire electrical system, rated at 20 amps (15 amps Canadian). Connect a maximum of 13 receptacles (12 in Canada, and fewer in certain U.S. locales) to one circuit. Consult your electrician to ensure the planned electrical load is within permissible limits.

1. Determine which electrical system you will use after consulting with your electrician and computer support personnel (see page 41). The four circuit system (4–Hot/2–Neutral/2–Ground) offers either a 3 + 1 option or 2 + 2 option by choosing different receptacles.
2. Determine location, quantity, and circuit number for duplex receptacles including the use of isolated and isolated/dedicated circuits.
3. Specify appropriate power kits to match hubs and beams — see beam chart on page 42.
4. Determine the location, quantity and type of power in-feeds and jumpers needed.

It is the customer's responsibility to ensure that the installation of the electrical components meets all local and national building codes and all other applicable regulations.

Electrical In-Feed (page 54)
- In-feed ordered separately for all hardwired applications.

Hub (page 34)
- A hub allows for a maximum of two in-feeds and 24 CAT6 data cables (.300" diameter) per hub. See page 40.
- Up to three beams joined to a hub can be powered.
- If hub is placed over a floor box then data and electrical can be run directly up hub from bottom cut out. Otherwise data and electrical can be run through the access door on the bottom of the side cover.
- Use beam-to-beam jumper kit U87JB to pass power through hub from one beam to another beam.

Hub-to-Beam Power Kits (page 55)
- Use hub-to-beam power kits to jump power from hub to one, two or three beams. Kit indicates quantity of beams.
- Only one beam can be powered when using the 3-sided power kit in a hub. Use beam-to-beam jumper model U87JB.
- When using 877012 (12' seal tight) for one beam connection use hub to beam jumper kit U87JH1, for two beam connection use hub to beam jumper kit U87JH2, and for three beam connection use hub to beam jumper kit U87JH3.

Beam-to-Beam Jumper (page 55)
- Use beam-to-beam jumper kit U87JB to pass power over a hub or support leg from one beam to another beam.

GSA Reference Page

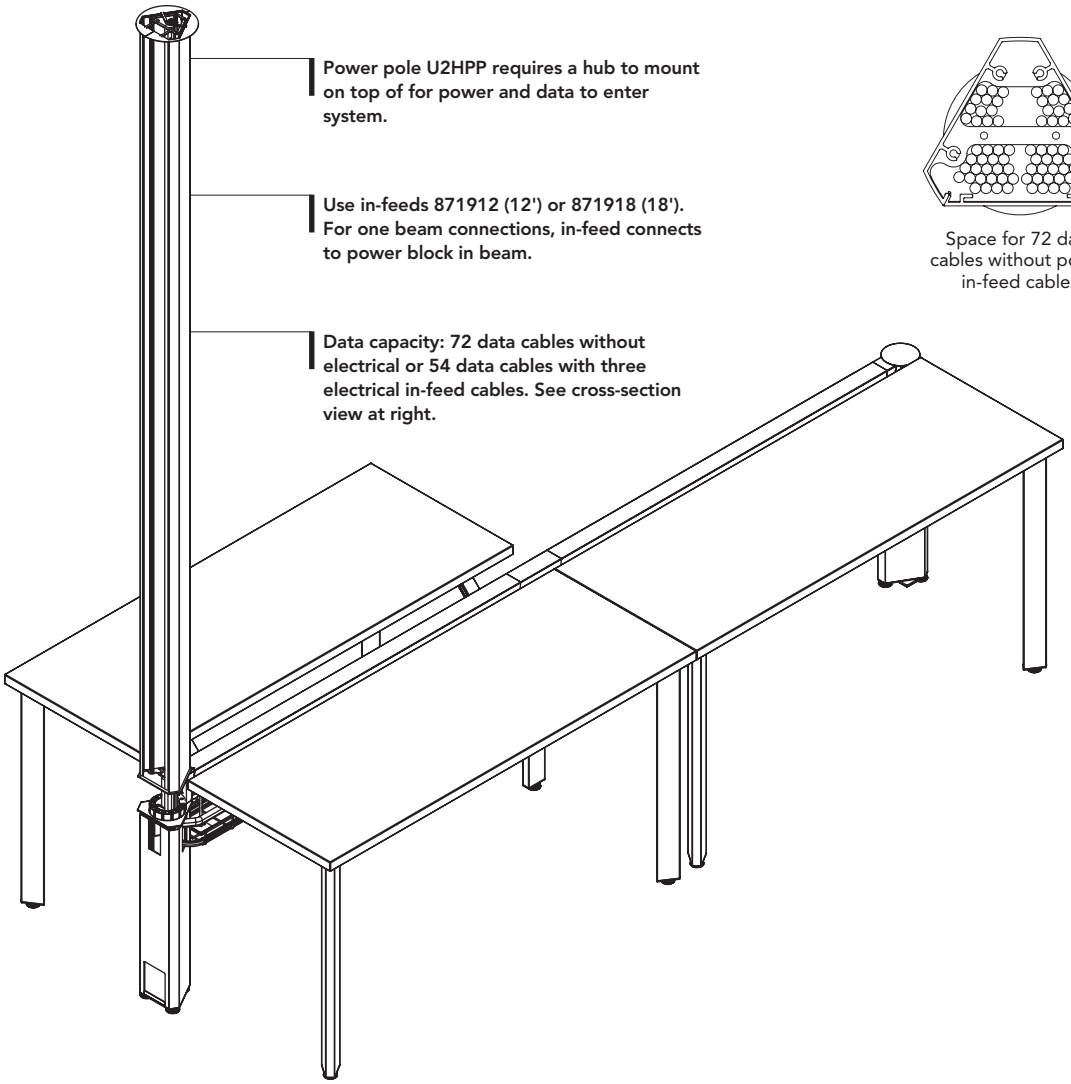

Model U2HPP

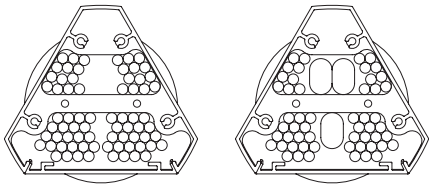

Space for 72 data cables without power in-feed cables

Space for 54 data cables with three power in-feed cables

Power /Communication Pole U2HPP (page 54)

- Requires a hub to mount on top of for power/data to enter system.
- Pole mounts to hub that has any number of connectors and connector gap fillers.
- Kit includes mounting bracket, top/bottom plates, power pole body, power pole cover, ceiling trim and hardware.
- Hub to beam connector kits ordered separately — see U2HPPEC for one beam hub connection application.
- Can power up to three beams.
- Can be used with both internal and external electrical.
- In-feed ordered separately.
- When using 871912 (12' length) or 871918 (18' length) for one beam connection in-feed connects directly to power block in connected beam, for two beam connection use hub to beam jumper kit U87JH2, and for three beam connection use hub to beam jumper kit U87JH3.
- Important that connector gap fillers be removed for two and three beam hub connections in order for data cables to exit the hub/power pole.

End Condition Application U2HPPEC (page 54)

- Kit includes different bottom plate and transition piece for more appealing aesthetic of end condition applications.
- Includes bottom mounting plate, transition piece, hub to beam connector, connector top trim, gap fillers, and hardware.
- Transition piece has two knockouts to allow for data cables to exit.

Electrical

Top Views of Hub

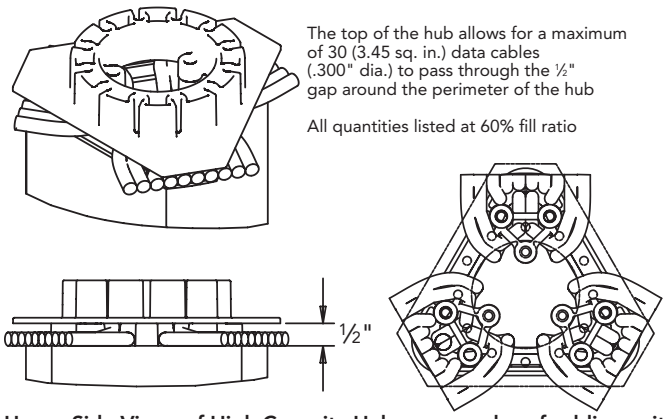

The top of the hub allows for a maximum of 30 (3.45 sq. in.) data cables (.300" dia.) to pass through the ½" gap around the perimeter of the hub

All quantities listed at 60% fill ratio

Electrical In-Feeds Cables (page 54)

- In-feed cable connects to a power kit in the hub or beam, transverses through the beam, hub and/or power pole and terminates in a junction box.
- Available in sealtight cable in 12', or in flex cable in 12' or 18' lengths. Consult your electrician to ensure the planned electrical load and cabling is within permissible national and local code limits.

Cable capacities for routing voice and data cables through hub are provided at left for top, side, and bottom of hub.

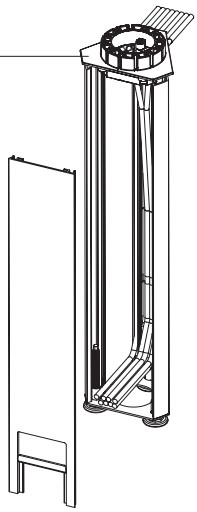

Upper Side Views of High Capacity Hub — examples of cabling exiting out three sides

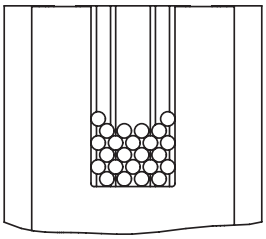

High capacity top port (6.5625 sq. in.). Accepts 24 voice/data cables (.300" dia.).

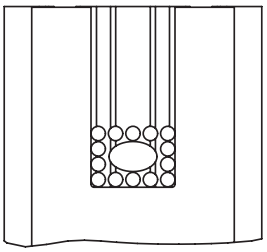

High capacity top port (6.5625 sq. in.). Accepts 14 voice/data cables (.300" dia.) and 1 conduit.

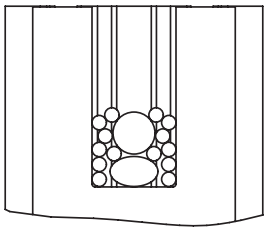

High capacity top port (6.5625 sq. in.). Accepts 14 voice/data cables (.300" dia.), 1 conduit, and 1 infeed.

Upper Side Views of High Capacity Hub — examples of all cabling exiting out one side

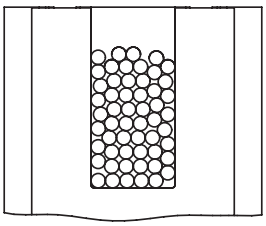

High capacity hub top exit for power/voice/data. Data only – 55 cables (.300 diameter) at 60% fill ratio. Opening area is 6.5625 sq in.

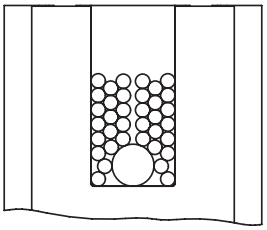

High capacity hub top exit. Conduit and data – 36 cables (.300 diameter) at 60% fill ratio. Opening area is 6.5625 sq in.

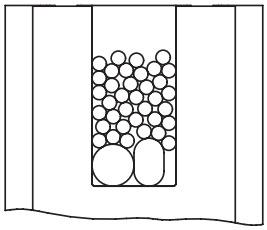

High capacity hub top exit. In-feed, conduit and data – 36 cables (.300 diameter) at 60% fill ratio. Opening area is 6.5625 sq in.

Lower Side Views of Hub

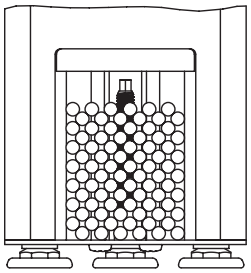

Front access door of hub accepts up to 84 (9.84 sq. in.) voice/data cables (.300" dia.) without power.

All quantities listed at 60% fill ratio

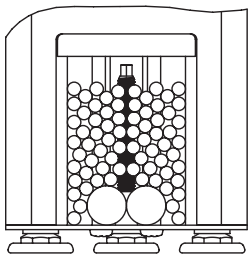

Front access door of hub accepts up to 72 (8.64 sq. in.) voice/data cables (.300" dia.) when electrical shares opening with two in-feeds

All quantities listed at 60% fill ratio

Bottom Views of Hub

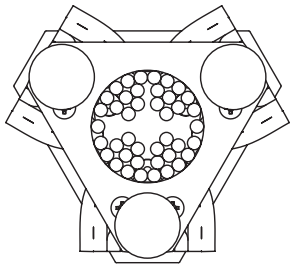

Bottom 2½" dia. opening of hub (4.91 sq. in.) accepts up to 42 voice/data cables (.300" dia.) without power.

All quantities listed at 60% fill ratio

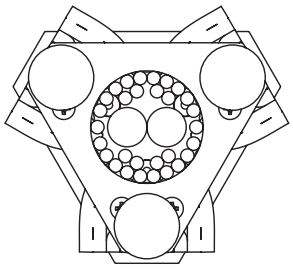

Bottom 2½" dia. opening of hub (3.71 sq. in.) accepts up to 30 voice/data cables (.300" dia.) when electrical shares opening with two in-feeds.

All quantities listed at 60% fill ratio

Flexconnect™ Electrical System Options

The four-circuit, eight-wire electrical system is widely specified and trusted by hundreds of thousands of end-users. This proven system delivers four circuits for every power infeed in either a 3 + 1 or 2 + 2 configuration. The isolated/dedicated circuits are ideal for sensitive computing equipment, while the common circuits are suitable for faxes, copiers, task lights and other peripherals. Both the 3 + 1 and 2 + 2 systems use the same pre-wired components, making it easy to adjust as electrical needs change.

Four-circuit, 3 + 1 Receptacle Option

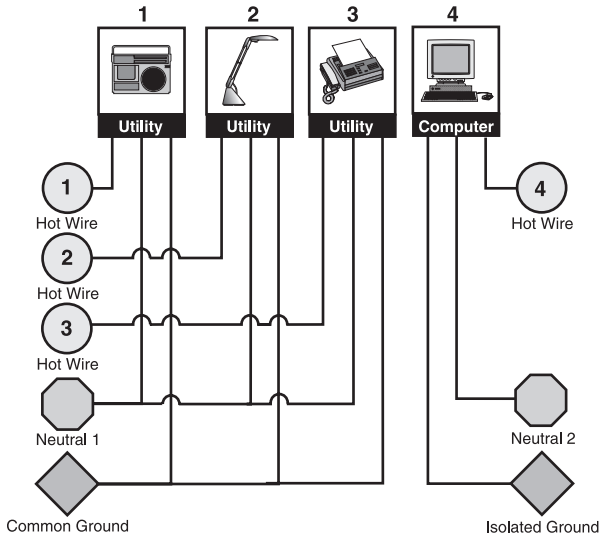

The 3 + 1 option is the electrical standard used on Allsteel systems for many years in most installations. This wiring option provides three utility circuits plus an isolated/dedicated circuit for more sensitive equipment. Circuit 2 (one of the 3 common circuits sharing a neutral wire) cannot be used with single-phase building electrical supply.

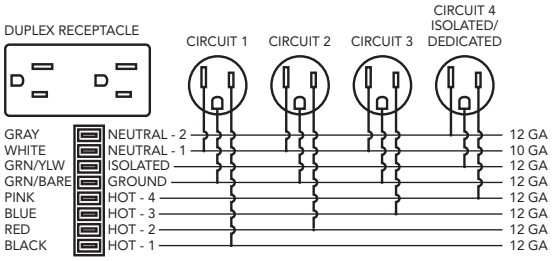

Four-circuit, 2 + 2 Receptacle Option

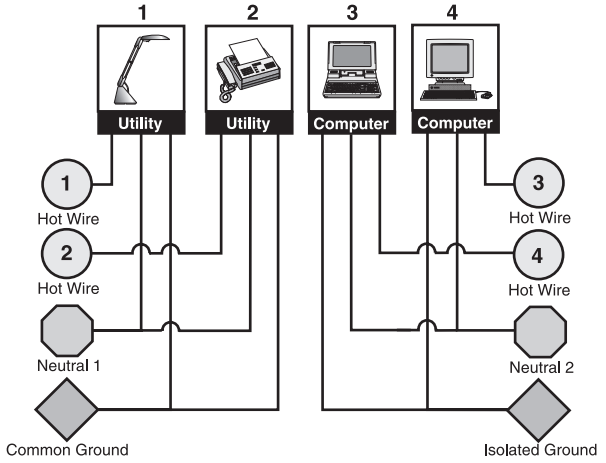

The 2 + 2 option is a wiring option that provides two utility circuits and two isolated circuits for more extensive computer usage applications.

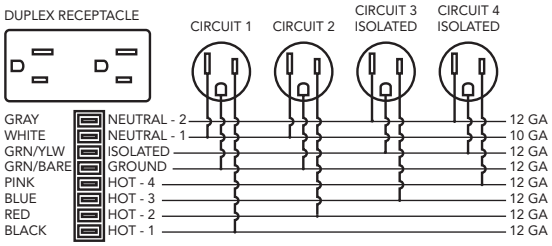

Typical power usage by the most commonly specified office equipment.

EQUIPMENT	AMPS
Computers	
Personal Computer	3
Notebook Computer	3
Monitors	
13" Color Monitor	2
17" Color Monitor	3
21" Color Monitor	4
15" Plasma Monitor	0.5
20" Plasma Monitor	1

EQUIPMENT	AMPS
Copiers	
Desktop Copier	15
Console Copier	20
Copier/Duplicator	30
Printers	
InkJet	less than 1
Personal Laser or LED	8
Workgroup Laser or LED	15

EQUIPMENT	AMPS
Fax Machines	
InkJet Fax	less than 1
Plain paper Fax	8
Task Lights	
30" T5 Fluorescent	0.12/bulb
60" T5 Fluorescent	0.24/bulb

Source: Industry Analysis, Inc., Rochester, NY

Electrical

Further™ — Working with In Beam Electrical

GSA Reference Page

Already having beams specified will have predetermined the power kits needed for the beams. The chart below shows beam model and required power kit. Simply match the kit to the beam and everything is included for that beam, except circuit specific receptacles. In-feed cable and jumpers to span hubs are ordered separately. The beam only carries power, no data - no need to leave ports open for data.

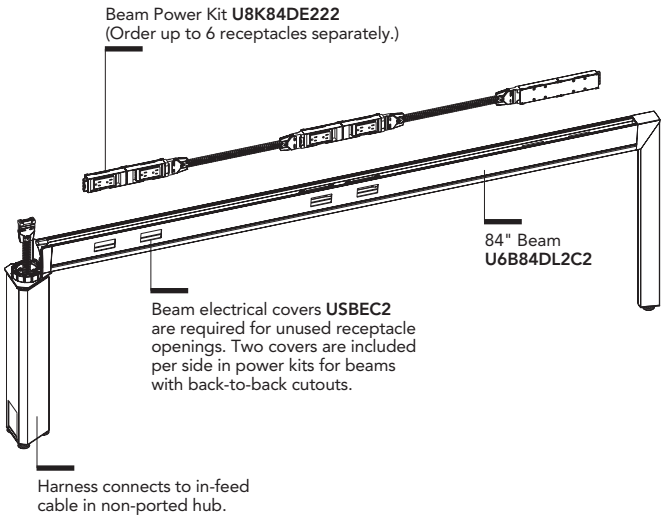

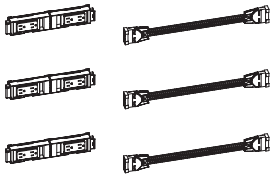

Example of connector blocks and jumpers that are included in Beam Power Kit **U8K84DE222** are shown above. Order receptacles separately, see page 56 for options.

Beam Electrical Knockout / Power Kit Configurations

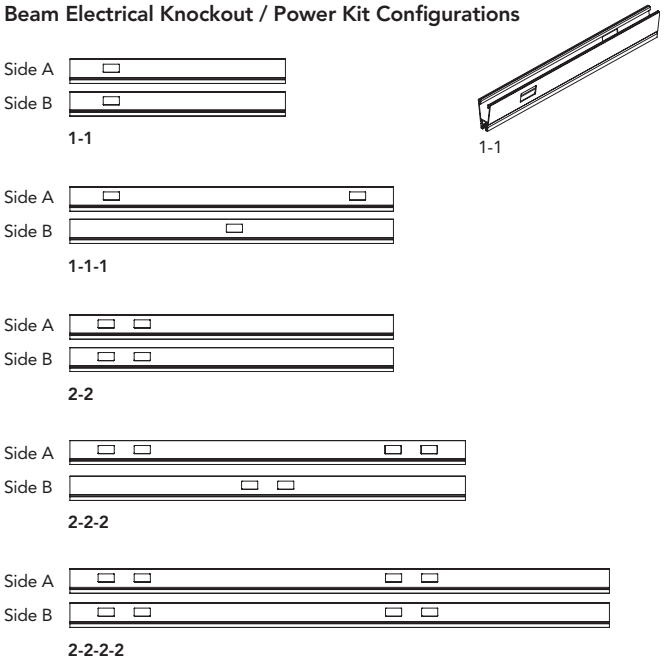

Beam Power Kits (page 55)

- Beam power kits are beam specific, the chart below shows beam model and required power kit (jumpers and power blocks). Simply match the kit to the length/configuration of the beam and everything is included for that beam, except circuit specific receptacles. The quantity of duplex receptacles required is noted. In-feed cable and jumpers to span hubs are ordered separately.
- Power is completely internal to beam. Beam allows for a single line of conduit in series. The beam only carries power no data, there is no need to leave ports open for data.
- Handed beam models 66" though 84" in length are provided with back-to-back cut outs in the center of the beam allowing for a choice on which side to position power – opposite side is covered with beam electrical covers included in a hardware pack. Additional covers can be ordered separately.

Beam Width and Description	Beam Model # Insert "L" for Left or "R" for Right	Dual Sided Power Kit – Width and Description	Power Kit Model #	Duplex Receptacle Locations Available
36" A1-B1	U6B36D ⊔ 1	36" 1-1	U8K36DE1	2
42" A1-B1	U6B42D ⊔ 1	42" 1-1	U8K42DE1	2
48" A2-B2	U6B48D ⊔ 2	48" 2-2	U8K48DE2	4
54" A2-B2	U6B54D ⊔ 2	54" 2-2	U8K54DE2	4
54" A1-B1-A1	U6B54DS111	54" 1-1-1	U8K54DS111	3
60" A2-B2	U6B60D ⊔ 2	60" 2-2	U8K60DE2	4
60" A1-B1-A1	U6B60DS111	60" 1-1-1	U8K60DS111	3
66" A2-2-B2	U6B66D ⊔ 2C2	66" 2-2-2	U8K66D222	6
66" A2-B2-A2	U6B66DS222	66" 2-2-2	U8K66D222	6
72" A2-2-B2	U6B72D ⊔ 2C2	72" 2-2-2	U8K72D222	6
72" A2-B2-A2	U6B72DS222	72" 2-2-2	U8K72D222	6
78" A2-2-B2	U6B78D ⊔ 2C2	78" 2-2-2	U8K78D222	6
78" A2-B2-A2	U6B78DS222	78" 2-2-2	U8K78D222	6
84" A2-2-B2	U6B84D ⊔ 2C2	84" 2-2-2	U8K84D222	6
84" A2-B2-A2	U6B84DS222	84" 2-2-2	U8K84D222	6
90" A2-B2-A2-B2	U6B90D ⊔ 4	90" 2-2-2-2	U8K90DE4	8
90" A2-B2-A2	U6B90DS222	90" 2-2-2	U8K90D222	6
96" A2-B2-A2-B2	U6B96D ⊔ 4	96" 2-2-2-2	U8K96DE4	8
96" A2-B2-A2	U6B96DS222	96" 2-2-2	U8K96D222	6

Duplex Receptacles (page 56)

- Duplex receptacles snap into power blocks of power kits.
- Receptacles cannot be back-to-back.
- Ordered separately, receptacles are available in eight colors and are labeled to indicate circuit number: 1, 2, 3, or 4.

Receptacle Color Recommended to Coordinate with Paint Color

Recommended Paint Color	Receptacle Color
Brilliant White — PQ8	White — EW
Carob — P52	Black — E4
Champagne Metallic — PR5	Muslin — EU
Fossil — P28	Flint — E9
Gunmetal Metallic— PR3	Brownstone — EY
Parchment — P93	Muslin — EU
Platinum Metallic — PR2	Loft — EV

Electrical Covers (page 56)

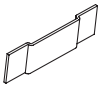

- Fits into duplex receptacle openings in Further ported beams or hubs in place of duplex receptacle.
- Specify paint color.
- Chicago code models available.

Side Views of Wire Managers

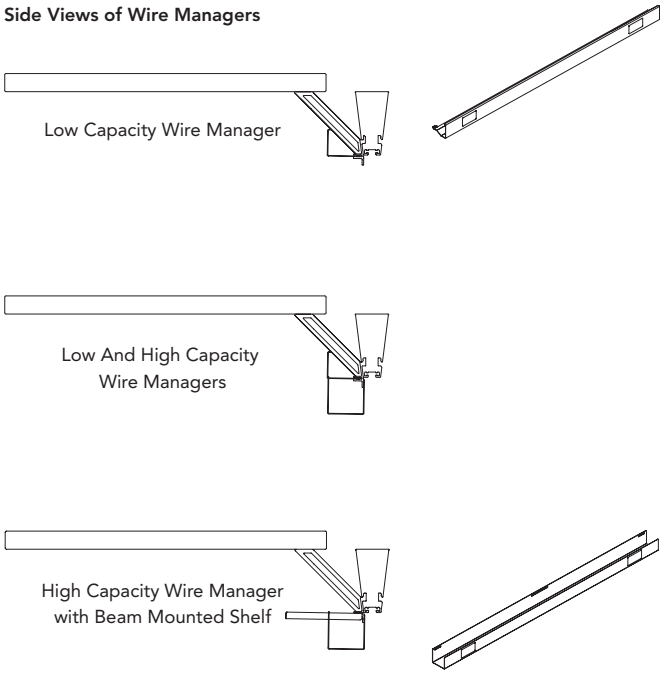

Data
- Data can enter hub through bottom if placed directly over floor box or through hub side access door on cover — see below and page 40.
- Data exits hub only through gap at top of hub — see page 40.
- Data is external to beam, cabling is routed to users by use of a wire manager mounted to beam. See illustration at left.

Painted Metal Wire Manager — Low Capacity (page 57)
- Available core, select, and accent paint. Mounts to beam using wire manager clip U9BWMC (ordered separately).
- Widths from 24" up to 78" in 6" increments.
- Holds up to 18 data cables.
- Made from sheet metal.
- Cannot be used in conjunction with beam mounted shelves (U9XXBMS).
- Can be used in conjunction with high capacity wire managers (U9XXBWHCM).
- Can pass across in-line support leg but not across a hub.
- Cannot be used with below beam electrical.

Painted Metal Wire Manager — High Capacity (page 57)
- Mounts to beam using wire manager clip model U9BWMC (ordered separately).
- Widths 24" through 78" in 6" increments.
- Made from sheet metal.
- Can be used in conjunction with low capacity wire manager or beam mounted shelf. See illustration at left.
- Low capacity tray and beam mounted shelf can act as covers for data when using the high capacity tray.
- Holds up to 36 data cables.
- Can pass across in-line support leg but not across a hub.
- Cannot be used with below beam electrical.

Number of U9BWMC Wire Manager Clips Required		Component Length			
		24"	30"– 36"	42"– 48"	54"– 78"
Model	Low Capacity Wire Manager U9XXBWLCM	2	3	4	5
	High Capacity Wire Manager U9XXBWHCM	2	3	4	5
	Beam Mounted Shelf U9XXBMS	2	3	4	5 (60" Max.)

Wire Manager Clips U9BWMC (page 57)

- Used to mount metal wire manager or beam mounted shelf to beam.
- See chart at left for clips required.
- Model comes with 5 clips.

Wire Basket attaches under worksurface or beam

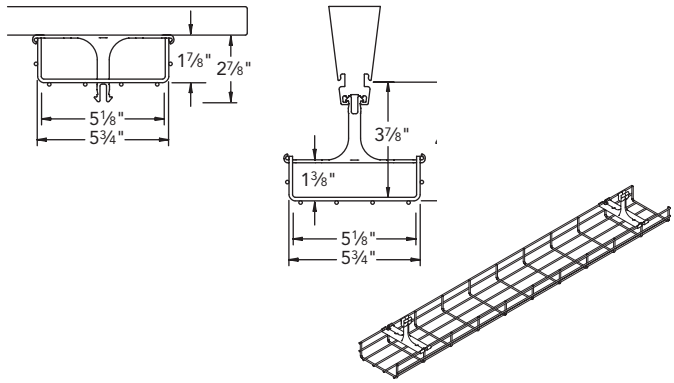

Wire Basket (page 57)
- Offered in 42", 54", and 66" widths – actual dimensions are 40⅛", 52⅛", 64⅛". Can mount to beam or below a worksurface.
- Model includes basket and two vertical hanging supports.
- Verticals must be placed 18" or more apart from one another and must be within 15" from each end of a basket.
- Vertical must be centered on basket width
- Cannot be used with beam mounted modesties.
- Wire basket is made of 0.148" diameter steel wire.
- Basket is PR6 (silver) powder paint and support verticals are silver ABS plastic.
- Data capacity: 72 cables.
- Maximum load is 25 pounds.

Data Faceplates

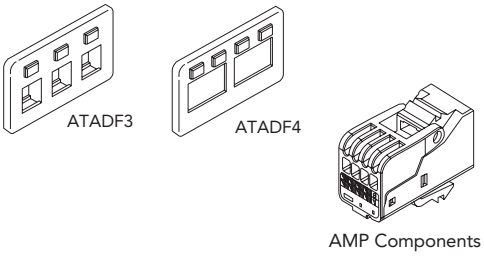

Data Faceplates (page 56)
- Fits into receptacle and data port openings on above wire management or below beam data mount U8BBDM.
- Data modules do not work in beam.

AMP® NETCONNECT® Components (page 56)
- AMP NETCONNECT® Components are supported by AMP's 25 year warranty, including reconfiguration.

Electrical

Further™ — Working with Chicago & New York Electrical

GSA Reference Page

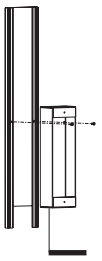

Chicago code junction box
U8IKCH mounts to hub cover.

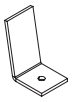

U8EBKCH4

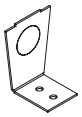

U8BBKCH

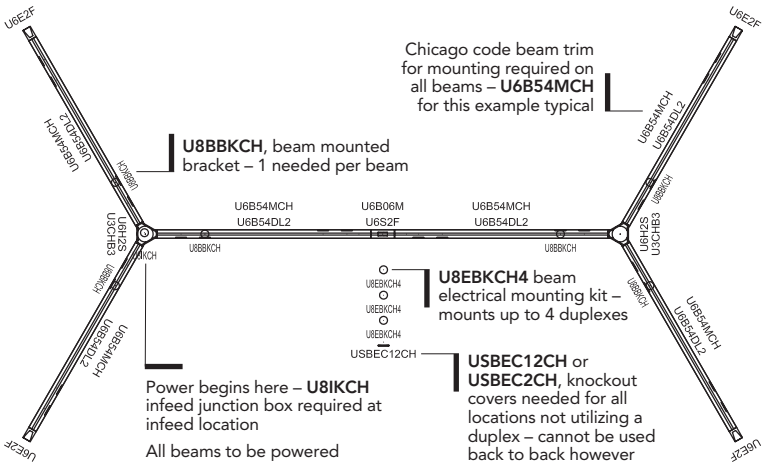

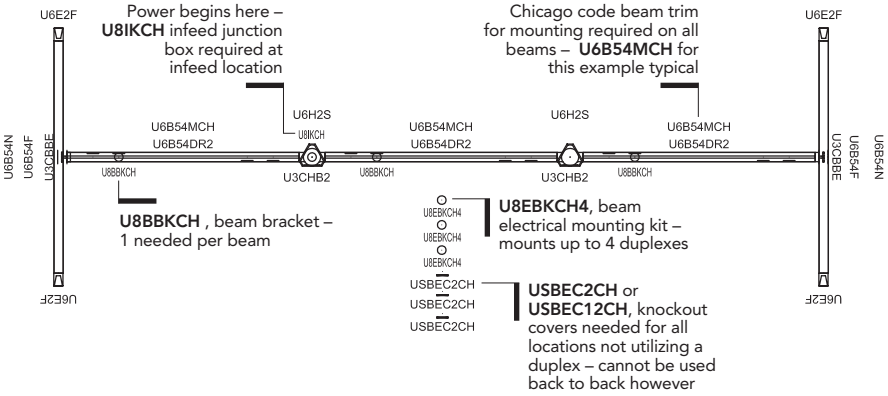

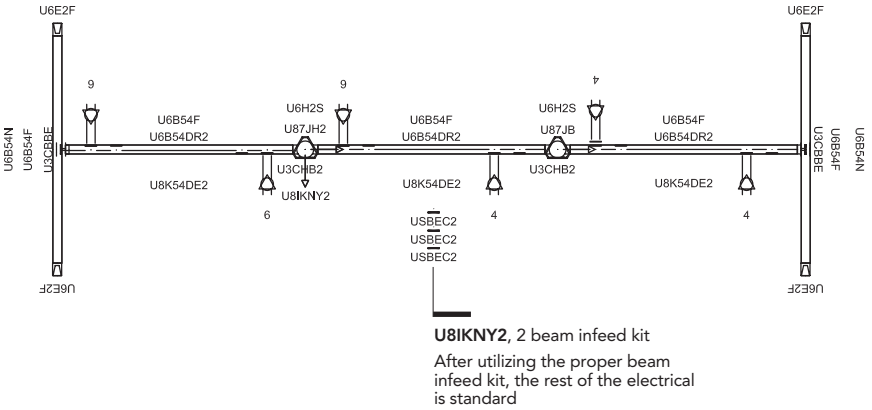

Hardwire — Chicago Code (page 54)

- Requires Chicago code beam mounting top trim (see page 36) for all powered beams.
- Requires Chicago code junction box U8IKCH. Kit includes hardware and template for mounting junction box to hub cover. Up to three in-feeds can be run from a single junction box.
- A ⅜" diameter box connector cable screw connector must be used at the knockout locations on the junction box and brackets in order to fit within enclosures.
- Requires Chicago code in-feed to beam kit U8BBKCH. Kit includes bracket to close off one end of a beam and installation hardware. Kit is used to enclose beam runs to meet code. Beams must be enclosed where they meet a hub.
- Requires Chicago beam electrical mounting kit U8EBKCH4 that includes hardware to mount 4 duplexes and installation hardware pack.
- Beam electrical cut-out covers cannot be back-to-back with Chicago code electrical.
- Unused electrical cut outs on beams must be closed using covers. Electrical mounting brackets from U8EBKCH4 are to be used for securing covers from models USBEC2CH or USBEC12CH instead of the supplied VHB tape in the hardware pack.
- Standard hub models required when using powered beams, ported hub models cannot be used.

New York Code (page 54)

- Requires New York code hardwire in-feed kits:
  - U8IKNY1 for single beam in-feed kit.
  - U8IKNY2 for two beam in-feed kit (includes hub jumper kit U87JH2).
  - U8IKNY3 for three beam in-feed kit (includes hub jumper kit U87JH3).
- All New York in-feed kits include hardware and template for mounting junction box to hub cover.
- Standard hub models required when using powered beams. Powered hub models cannot be used with powered beams.

Further Electrical Example 1

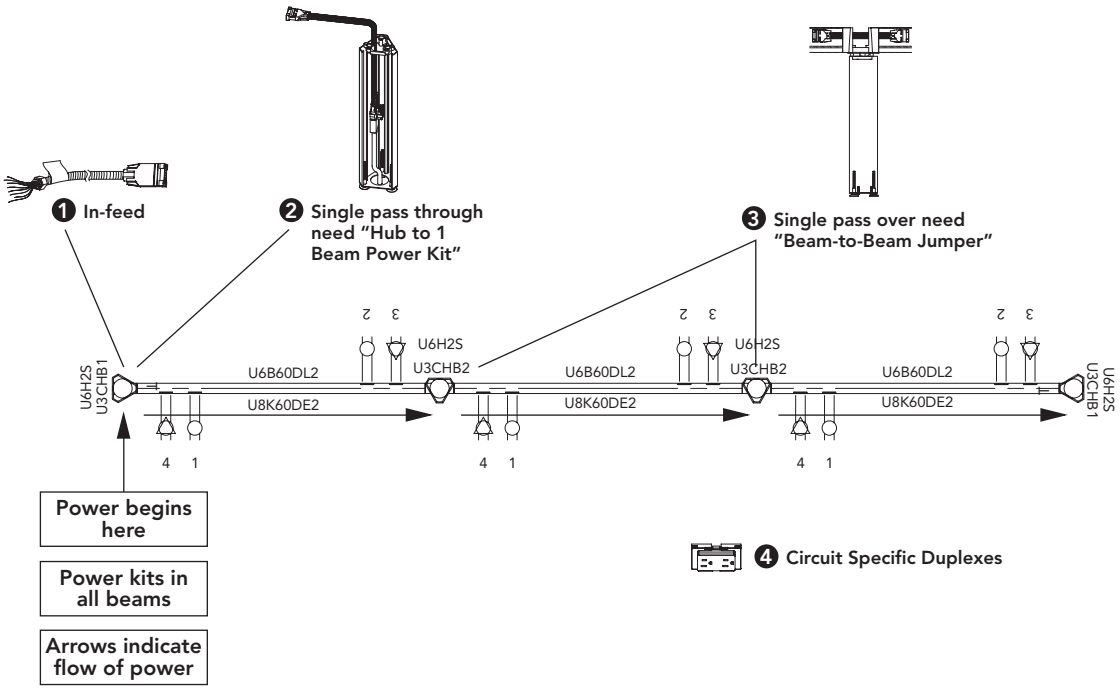

Further Electrical Example 2

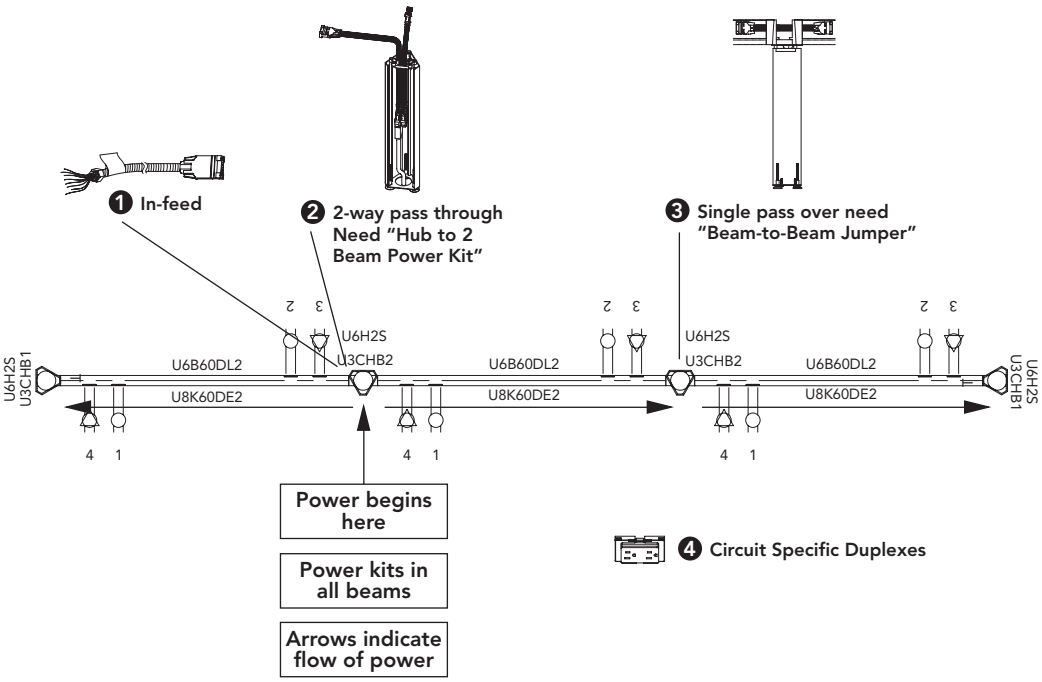

Electrical

Further Electrical Example 3

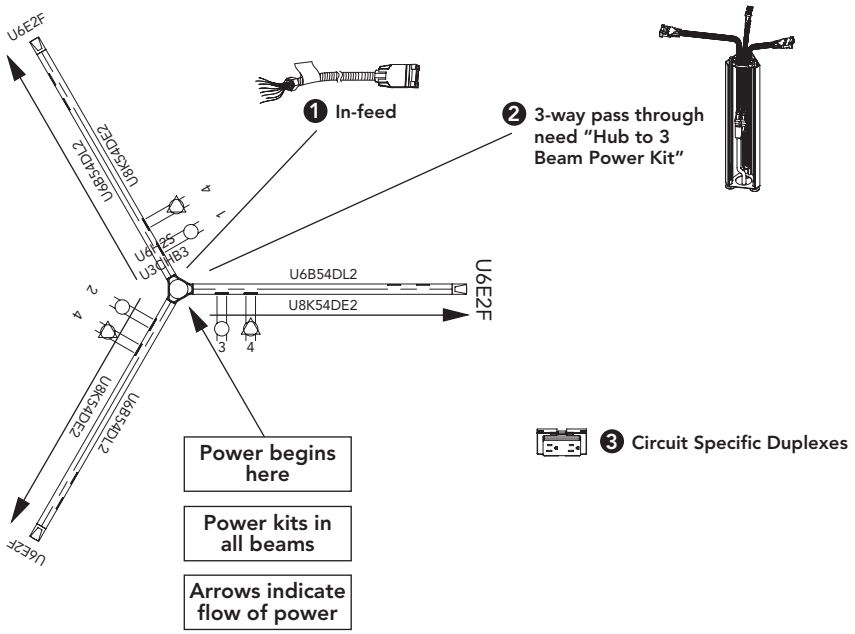

Further Electrical Example 4

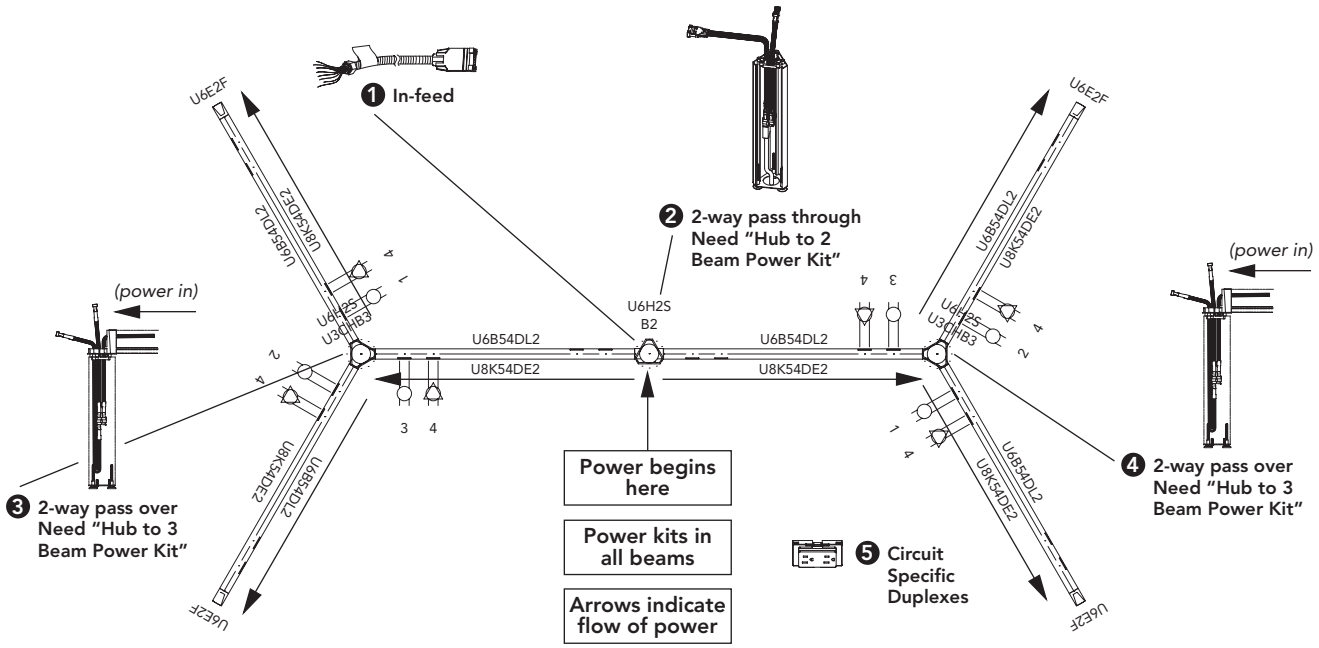

Further Electrical Example 5

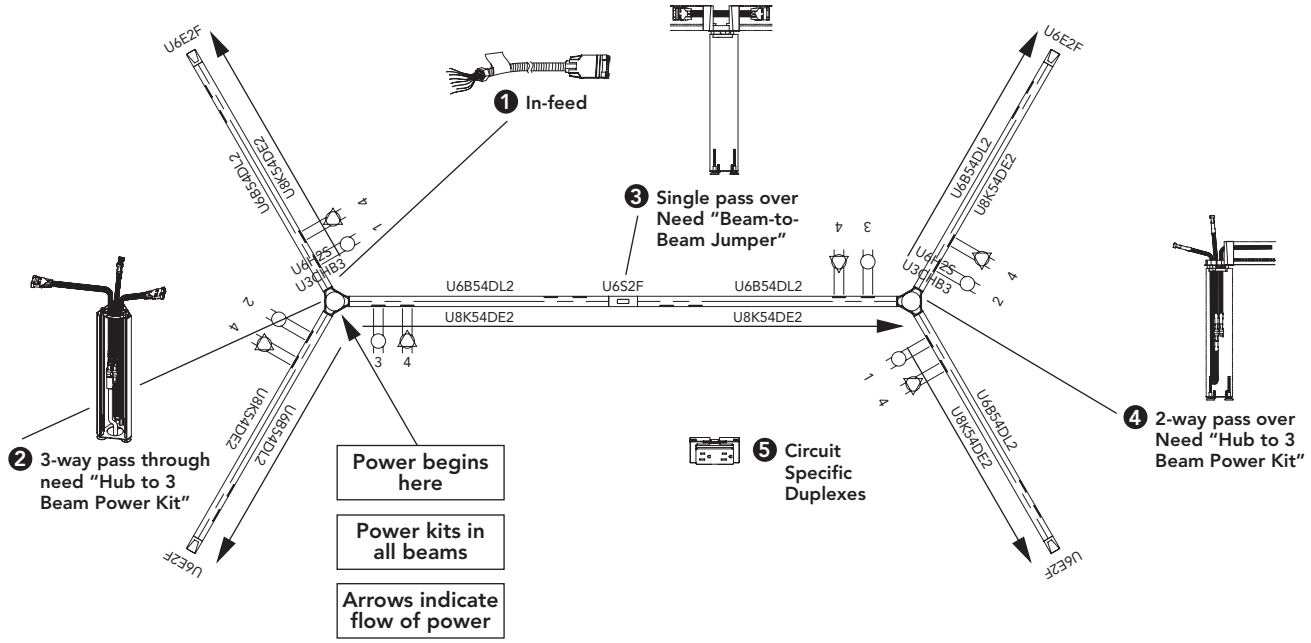

Further Electrical Example 6

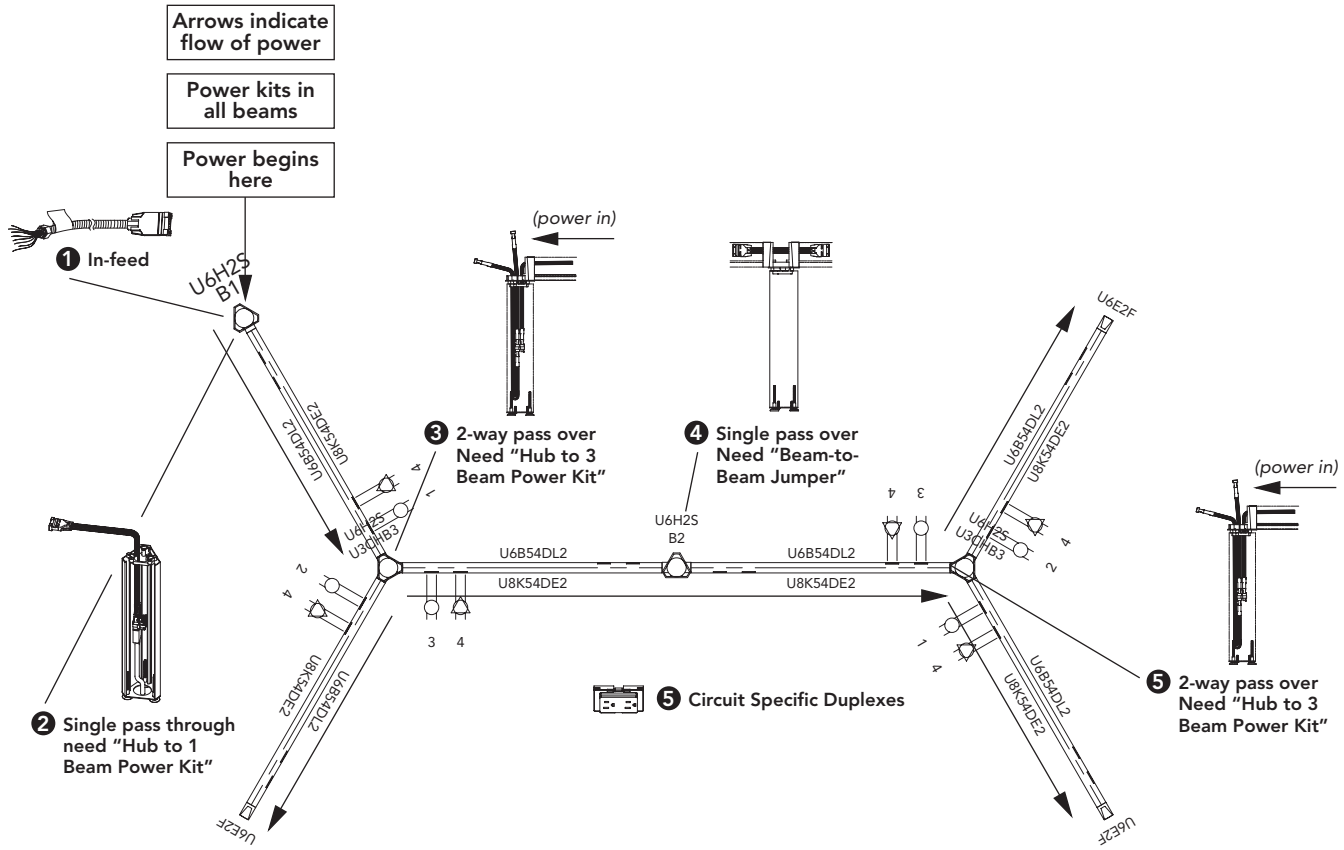

Electrical

Further Electrical Example 7

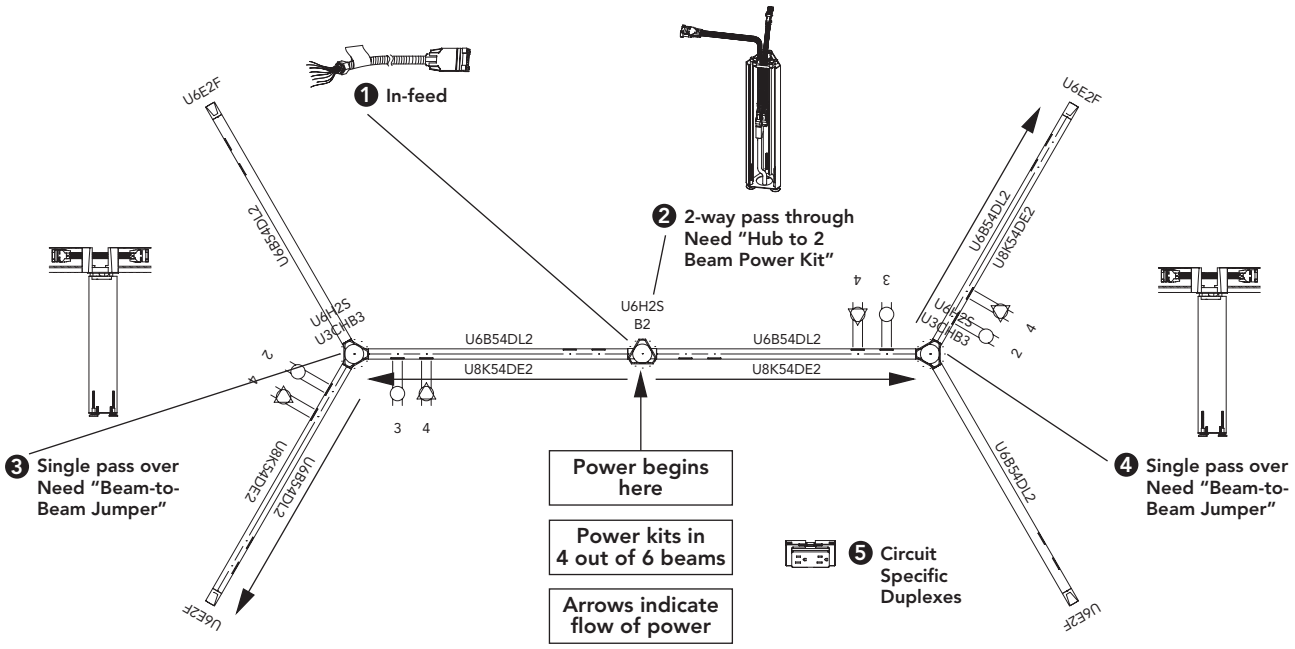

Further Electrical Example 8

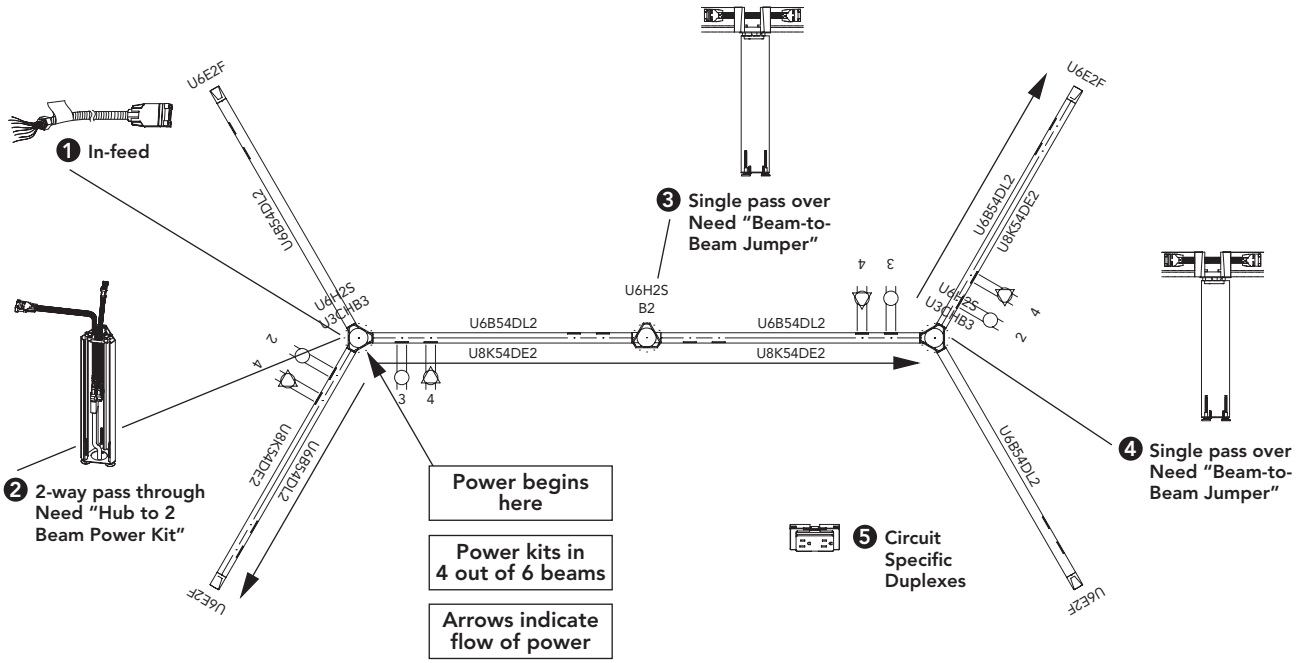

Electrical

Further Electrical Example 1

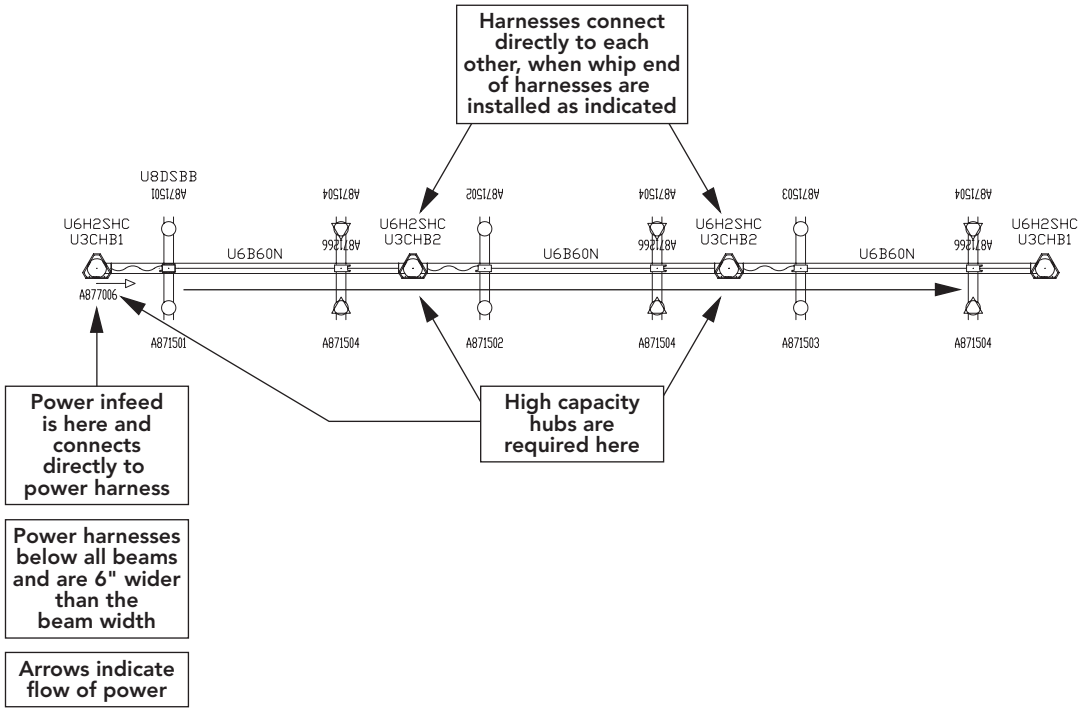

Further Electrical Example 2

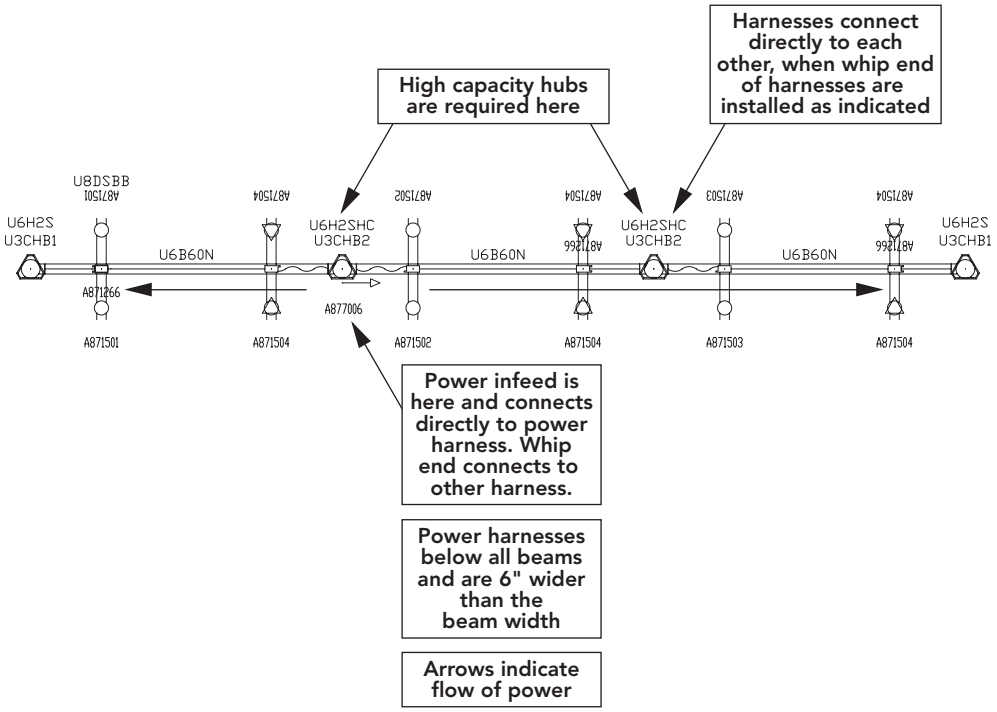

Further Electrical Example 3

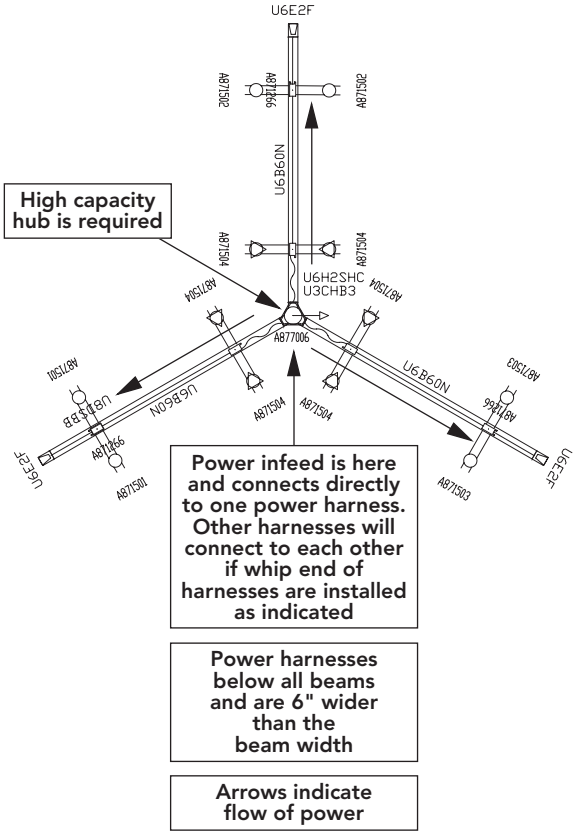

Further Electrical Example 4

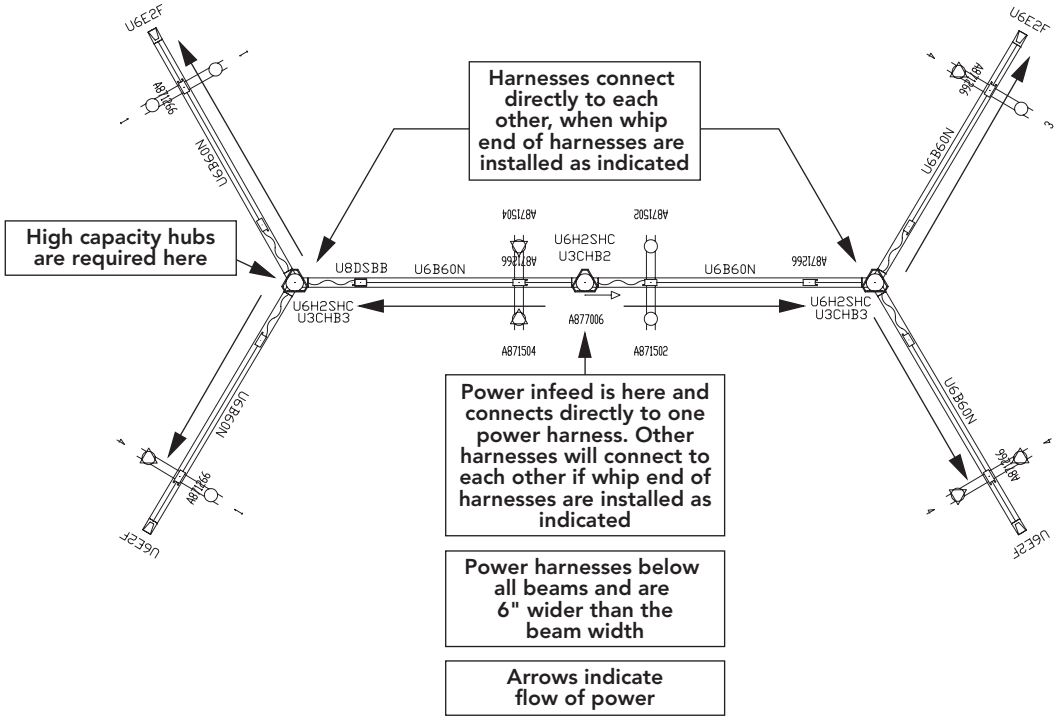

Electrical

Further Electrical Example 5

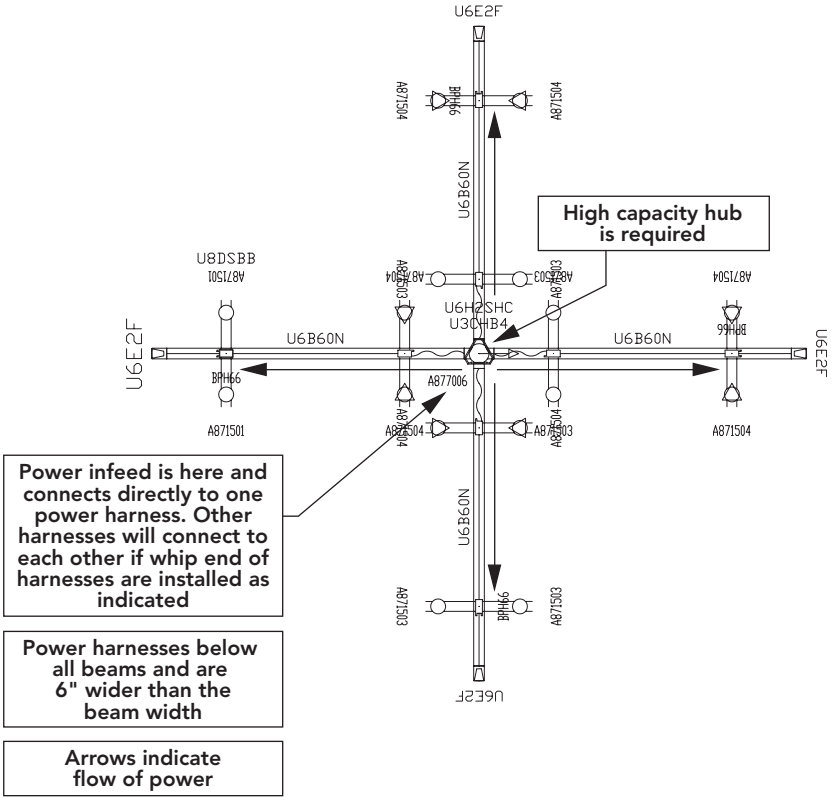

Electrical

Further™ — Working with Below Beam Electrical

GSA Reference Page

BEAMS — NORMAL POWER USER

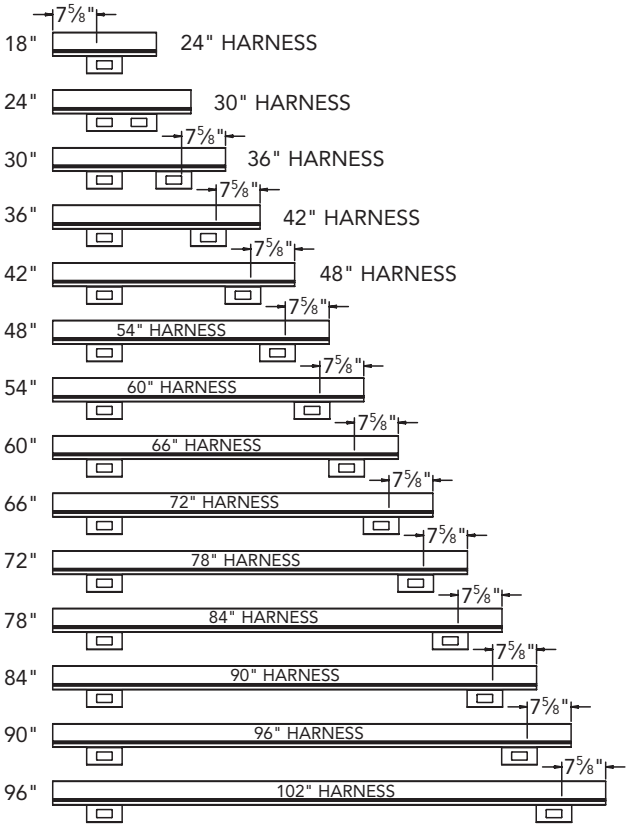

BEAMS — HEAVY POWER USER

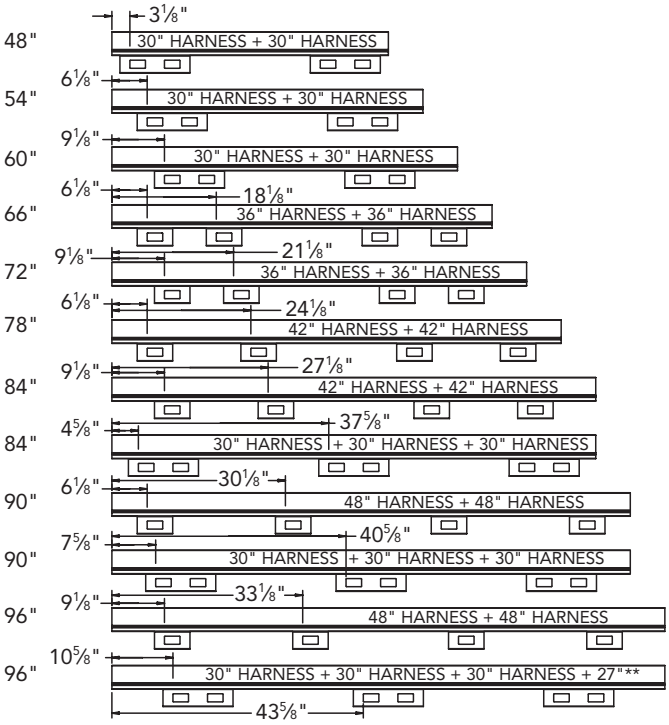

NOTE: All Duplexes Are Symmetrical On Beam

**NOTE: 96" Beam with 3-30" Harnesses requires 27" Jumper model U87U327A to connect to other beams.

Below Beam Electrical

- In-feeds will plug directly into harnesses to begin power.
- Harnesses plug into one another on beams and across/around hubs and in-line legs. See examples on pages 50-52.

Below Beam Shrouds U8DSPSS and U8DSPSD (page 56)

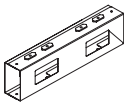

- Required below beam to cover power block and to provide a clean aesthetic.
- U8DSPSS for use with single block duplex electrical harnesses. One shroud for 24"W harness, two units required for harnesses 36"W to 102"W.
- U8DSPSD for use with 30"W double block duplex electrical harnesses.
- Refer to illustrations at left to determine quantity of single or double shrouds required to cover power blocks.
- Includes shroud, mounting bracket(s) and hardware.
- Does not cover conduit. Open on ends, no end caps.

Below Beam Data Mount U8BBDM (page 56)

- Mounts to bottom channel of beam.
- 4"W x 4⅞"D with two 1.375" x 2.600" cutouts, one facing each side of beam.
- Accepts Allsteel standard 3 or 4 port faceplate (models TADF3 AND TADF4) ordered separately. See page 56.

U8DSPSS

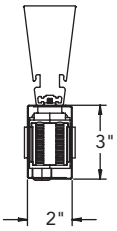

U8BBDM

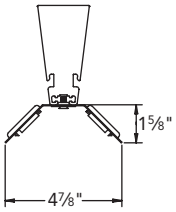

Electrical

Further™ — Electrical In-Feed Components

For specification information see pages 38-53.

GSA SIN 711-1

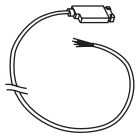

Description	Four-circuit 3 + 1 2 + 2	List Price
Electrical In-Feed Cables		
12' Flex Cable	A871912 S	$ 244
18' Flex Cable	A871918 S	$ 306
6' Sealtight Cable Power In-Feed	A877006 S D	$ 247
12' Sealtight Cable Power In-Feed	A877012 S	$ 298

U2HPP

U2HPPEC

Description	Model	List Price Core	Select	Accent
Power Pole for use with Further Hub				
96"H Power/Communication Pole (mounts on top of hub)	U2HPP	$ 1239	$ 1285	$ 1347
End Condition Kit (for single beam applications)	U2HPPEC S	$ 155	$ 174	$ 201

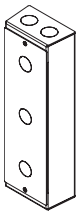

U8IKCH

U8BBKCH

U8EBKCH4

Description	Model	List Price
Chicago Code Electrical		
In-Feed Junction Box 3" x 10½" x 2"	U8IKCH S	$ 140
In-Feed to Beam Bracket	U8BBKCH S	$ 31
Beam Electrical Mounting Kit (to mount 6 duplexes)	U8EBKCH4 S	$ 68
New York Code Electrical		
Single Beam In-Feed Kit	U8IKNY1 S	$ 310
Two Beam In-Feed Kit	U8IKNY2 S	$ 568
Three Beam In-Feed Kit	U8IKNY3 S	$ 672

D *Discontinued 12/31/2015*

How to specify —	*1st Option:*	*1st Option:*
Select the Model Number from above.	**Electrical Infeed Color** *(if applicable)*: P Black	**Paint Color** *(if applicable)*: C S A
_ _ _ _ _ _ .	P	_ _ _

Examples: **A871912.P** **U2HPP.P7G**

S *Shippable by small-package carrier.*

For specification information see pages 38-53.

GSA SIN 711-1

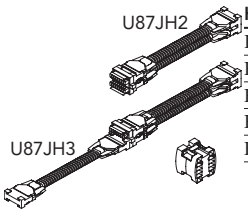

Description	Model		List Price
Hub Jumpers			
Beam-to-Beam Jumper (through Hub)	**U87JB**	S	$ 83
Hub to 1 Beam Power Kit	**U87JH1**	S	$ 130
Hub to 2 Beam Power Kit	**U87JH2**	S	$ 248
Hub to 3 Beam Power Kit	**U87JH3**	S	$ 362
H-Connector	**U87UH**	S	$ 37

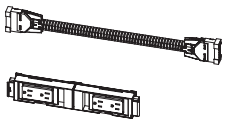

Beam Power Kits include jumpers and blocks for specific beam models — see matrix on page 42. Order receptacles separately on page 56.

Beam Power Kits			Applicable Beam(s)	
36" Dual Sided End 1-1	**U8K36DE1**	S	U6B36D ⊔ 1	$ 217
42" Dual Sided End 1-1	**U8K42DE1**	S	U6B42D ⊔ 1	$ 248
48" Dual Sided End 2-2	**U8K48DE2**	S	U6B48D ⊔ 2	$ 290
54" Dual Sided End 2-2	**U8K54DE2**	S	U6B54D ⊔ 2	$ 300
54" Dual Sided 1-1-1	**U8K54DS111**	S	U6B54DS111	$ 372
60" Dual Sided End 2-2	**U8K60DE2**	S	U6B60D ⊔ 2	$ 310
60" Dual Sided 1-1-1	**U8K60DS111**	S	U6B60DS111	$ 383
66" Dual Sided 2-2-2	**U8K66D222**	S	U6B66DS222 or U6B66D ⊔ 2C2	$ 444
72" Dual Sided 2-2-2	**U8K72D222**	S	U6B72DS222 or U6B72D ⊔ 2C2	$ 455
78" Dual Sided 2-2-2	**U8K78D222**	S	U6B78DS222 or U6B78D ⊔ 2C2	$ 465
84" Dual Sided 2-2-2	**U8K84D222**	S	U6B84DS222 or U6B84D ⊔ 2C2	$ 475
90" Dual Sided End 2-2-2-2	**U8K90DE4**	S	U6B90D ⊔ 4	$ 589
90" Dual Sided 2-2-2	**U8K90D222**	S	U6B90DS222	$ 486
96" Dual Sided End 2-2-2-2	**U8K96DE4**	S	U6B96D ⊔ 4	$ 599
96" Dual Sided 2-2-2	**U8K96D222**	S	U6B96DS222	$ 496

Example below shows jumpers and blocks included with Beam Power Kit **U8K48DE2**. Receptacles are ordered separately on page 56 to allow circuit(s) to be specified.

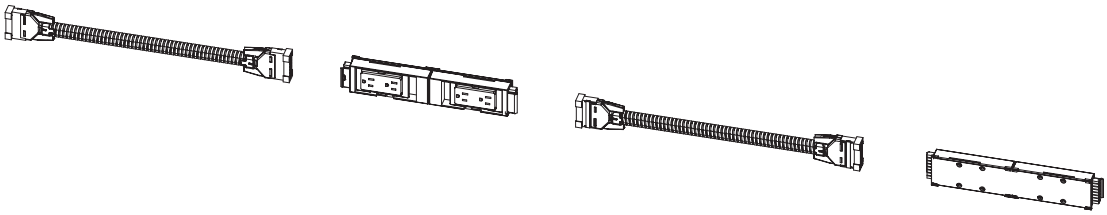

How to specify —	*1st Option:*
Select the Model Number from above.	**Color** *(if applicable)*: **P** Black
U 8	P

Examples: **U87JB.P** **U8K36DE1.P** **U8K54DS111.P**

S *Shippable by small-package carrier.*

Electrical

For specification information see pages 38-53.

GSA SIN 711-1

U87U501

Description	Model	List Price
Duplex Receptacles		
Circuit 1	**U87U501** S	$ 38
Circuit 2	**U87U502** S	$ 38
Circuit 3 (3 + 1)	**U87U503** S	$ 38
Circuit 3 (2 + 2)	**U87U506** S	$ 38
Circuit 4 — isolated/dedicated	**U87U504** S	$ 38

USBEC2

Description	Model	Chicago Code Model	List Price Core	List Price Select	List Price Accent
Electrical Accessories					
Beam Electrical Covers — 2 Pack	**USBEC2** S	**USBEC2CH** S	$ 37	$ 37	$ 37
Beam Electrical Covers — 12 Pack	**USBEC12** S	**USBEC12CH** S	$ 130	$ 130	$ 130

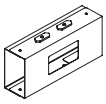
U8DSPSS

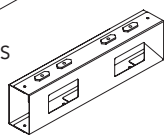
U8DSPSD

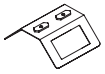
U8BBDM

Description	Model	List Price Core	List Price Select	List Price Accent
Mounting Components for Below Beam Electrical				
Below Beam Shroud* — For Single Power Block (one unit for 24"W power harness, two units for 36"W to 102"W harnesses)	**U8DSPSS** S	$ 104	$ 109	$ 114
Below Beam Shroud* — For Double Power Block (for 30"W Power Harness)	**U8DSPSD** S	$ 130	$ 135	$ 140
Below Beam Data Mount 4"W x 4⅞"D (2 – 1.375" x 2.600" cutouts, one facing each side of beam)	**U8BBDM** S	$ 52	$ 55	$ 60

*Includes mounting components.

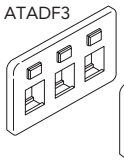
ATADF3

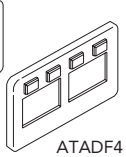
ATADF4

Description	Model	List Price
AMP Data Faceplates (will not work in beams)		
Three-Port Flex-Mode Faceplate, Black (E4)	**ATADF3** S	$ 20
Four-Port Flex-Mode Faceplate, Black (E4)	**ATADF4** S	$ 20

Notes: TADF3 can install up to 3 jacks (CAT 3, 5E or 6). TADF4 can install 4 jacks (CAT 3, 5E or 6).

ATADJ5

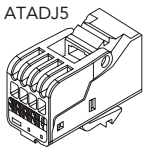

Jacks		
AMP RJ45 CAT 5E Jack — Black only (AMP model # 1116604-2) Toolless	**ATADJ5** S	$ 41
AMP RJ45 CAT 6 Jack — Black only (AMP model # 1375055-2) Requires Tool	**ATADJ6** S	$ 55

How to specify — Select the Model Number from above.	*1st Option:* Electrical Receptacle Color *(if applicable)*:	*1st Option:* Paint Color *(if applicable)*:	*1st Option:* Data Faceplate Color *(if applicable)*:
_ _ _ _ _ _ .	E _	C S A	E _

Examples: **U87U501.E9** **USBEC2.P7G** **ATADF4.E4**

S *Shippable by small-package carrier.*

For specification information see page 43 and for beam mounted shelf page 80.

GSA SIN 711-1

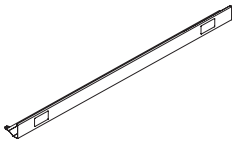

U942BWLCM

Description	Model	List Price Core	List Price Select	List Price Accent
Beam Mounted User Wire Manager — *Low Capacity Painted Metal (order clips below)*				
24"W Beam Mounted	**U924BWLCM** S	$ 83	$ 88	$ 96
30"W Beam Mounted	**U930BWLCM** S	$ 99	$ 104	$ 112
36"W Beam Mounted	**U936BWLCM** S	$ 114	$ 120	$ 129
42"W Beam Mounted	**U942BWLCM** S	$ 130	$ 136	$ 145
48"W Beam Mounted	**U948BWLCM** S	$ 145	$ 153	$ 166
54"W Beam Mounted	**U954BWLCM** S	$ 161	$ 169	$ 182
60"W Beam Mounted	**U960BWLCM** S	$ 171	$ 181	$ 197
66"W Beam Mounted	**U966BWLCM** S	$ 233	$ 243	$ 259
72"W Beam Mounted	**U972BWLCM** S	$ 259	$ 271	$ 290
78"W Beam Mounted	**U978BWLCM** S	$ 295	$ 307	$ 326

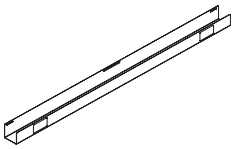

U942BWHCM

Beam Mounted Wire Manager — *High Capacity Painted Metal (order clips below)*				
24"W Beam Mounted	**U924BWHCM** S	$ 114	$ 120	$ 129
30"W Beam Mounted	**U930BWHCM** S	$ 119	$ 125	$ 134
36"W Beam Mounted	**U936BWHCM** S	$ 140	$ 148	$ 161
42"W Beam Mounted	**U942BWHCM** S	$ 161	$ 169	$ 182
48"W Beam Mounted	**U948BWHCM** S	$ 181	$ 191	$ 207
54"W Beam Mounted	**U954BWHCM** S	$ 181	$ 191	$ 207
60"W Beam Mounted	**U960BWHCM** S	$ 212	$ 224	$ 243
66"W Beam Mounted	**U966BWHCM** S	$ 253	$ 265	$ 284
72"W Beam Mounted	**U972BWHCM** S	$ 279	$ 293	$ 315
78"W Beam Mounted	**U978BWHCM** S	$ 308	$ 322	$ 344

U9BWMC

Wire Manager Clips (also used for Beam Mounted Shelf)		
5 Pack of Clips	**U9BWMC** S	$ 52 / $ 55 / $ 60

Note: See chart on page 43 for quantity of clips required.

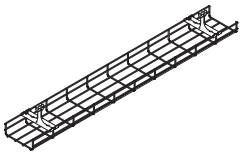

U942BWB

Description	Model	List Price
Wire Basket— PR6 Silver Only		
42"W Mounted Below Beam	**U942BWB** S	$ 186
54"W Mounted Below Beam	**U954BWB** S	$ 202
66"W Mounted Below Beam	**U966BWB** S	$ 212

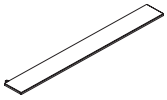

Description	Model	List Price Core	List Price Select	List Price Accent
Beam Mounted Metal Shelf — 5"D (order mounting clips separately — see page 43)				
24"W	**U924BMS**	$ 99	$ 105	$ 114
30"W	**U930BMS**	$ 109	$ 115	$ 124
36"W	**U936BMS**	$ 119	$ 127	$ 140
42"W	**U942BMS**	$ 130	$ 138	$ 151
48"W	**U948BMS**	$ 140	$ 150	$ 166
54"W	**U954BMS**	$ 155	$ 165	$ 181
60"W	**U960BMS**	$ 176	$ 188	$ 207

How to specify —

Select the Model Number from above.

U 9 _ _ _ _ _ _ _ . _ _ _

1st Option:

Paint:

C S A

Wire Basket PR6 only.

Examples: **U924BWLCM.PR6** **U9BWMC.PR6** **U942BWB.PR6**

S ***Shippable by small-package carrier.***

Electrical & Data

Power Harnesses, Pass-Thru Cables, and Dual Eight-Circuit

Electrical power harnesses can be used to distribute power by attaching them below Further beams. **Power blocks** on electrical power harness and pass-thru harness accept duplex receptacles.

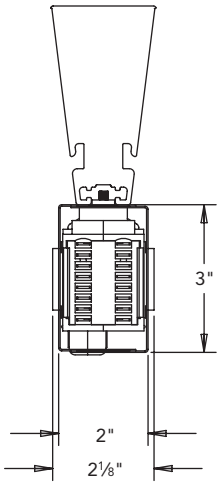

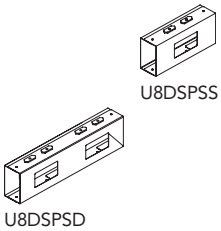

Below Beam Electrical

- In-feed and duplexes ordered separately.
- Can be used with any Allsteel standard 15 amp or 20 amp duplex.
- Cannot be used with beam mounted modesties.
- Utilizes standard panel system electrical harnesses 8712XX, pass thru cables 8710XX (w/o power block) and 8711XX (w/power block).
- Harnesses snap onto mounting brackets installed into bottom channel of beam.

Average Power User

- Recommend harness(es) 6" longer than beam length. See illustration on page 53.
- Duplexes will be 7⅝" from end of beam on either end.
- Each user will have two duplexes.
- 24" power harness requires 1–U8DSPSS, 30" power harness requires 1–U8DSPSD, all other power harnesses require 2–U8DSPSS shrouds. See illustration on page 53.

Heavy Power User

- Recommend following illustrations on page 53.
- Duplexes will be centered on beams.
- Each user will have at least four duplexes.
- Each 30" power harness requires 1–U8DSPSD. Each 36", 42", or 48" power harness requires 2–U8DSPSS shrouds. See illustration on page 53.

For specification information see page 58.

GSA SIN 711-1

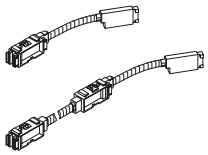

Description	Max. Recept. Cap. per Panel Side	Four-circuit 3 + 1 2 + 2		Three-circuit Separate Neutrals	List Price
Electrical Power Harnesses					
24"W	1	A871224	S	A871224A	$ 212
30"W	2	A871230	S	A871230A	$ 212
36"W	2	A871236*	S	A871236A	$ 212
42"W	2	A871242*	S	A871242A	$ 226
48"W	2	A871248*	S	A871248A	$ 226
54"W	2	A871254	S	A871254A	$ 226
60"W	2	A871260*	S	A871260A	$ 226
66"W	2	A871266	S	A871266A	$ 226
72"W	2	A871272	S	A871272A	$ 227
78"W	2	A871278	S	A871278A	$ 250
84"W	2	A871284	S	A871284A	$ 250
90"W	2	A871290	S	A871290A	$ 270
96"W	2	A871296	S	A871296A	$ 270
102"W	2	A8712102	S	A8712102A	$ 290

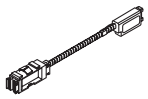

Electrical Pass-Thru Harnesses with Power Block					
24"W	1	A871124	S	A871124A	$ 132
30"W	1	A871130	S	A871130A	$ 132
36"W	1	A871136*	S	A871136A	$ 132
42"W	1	A871142*	S	A871142A	$ 139
48"W	1	A871148*	S	A871148A	$ 139
60"W	1	A871160*	S	A871160A	$ 139
72"W	1	A871172	S	A871172A	$ 186
96"W	1	A871196	S	A871196A	$ 217
120"W	1	A8711120	S	A8711120A	$ 251
144"W	1	A8711144	S	A8711144A	$ 287

*Electrical harnesses are intended for use with Allsteel systems furniture and are approved under GSA SIN 711-1. When purchased separately and used without Allsteel systems furniture, those electrical harnesses marked by (*) are considered Open Market.

Electrical Pass-Thru Cable without Power Block					
18"W	0	A871018	S	A871018A	$ 119
20"W	0	A871020	S	A871020A	$ 119
24"W	0	A871024	S	A871024A	$ 119
30"W	0	A871030	S	A871030A	$ 119
36"W	0	A871036	S	A871036A	$ 119
42"W	0	A871042	S	A871042A	$ 125
48"W	0	A871048	S	A871048A	$ 125
60"W	0	A871060	S	A871060A	$ 125
72"W	0	A871072	S	A871072A	$ 173
96"W	0	A871096	S	A871096A	$ 207
120"W	0	A8710120	S	A8710120A	$ 241
144"W	0	A8710144	S	A8710144A	$ 271

Note: Four-circuit components and Three-circuit components (with an "A" suffix) cannot be connected together.

Jumpers					
27" Jumper		U87U327A	S		$ 100

How to specify —	*1st Option:*
Select the Model Number from above.	**Color:** **P** Black
	P

Examples: **A871224.P** **A871224A.P** **A871124.P**

S *Shippable by small-package carrier.*

Collaborative Hub

A Collaborative Standalone Hub provides access to power and data in teaming spaces in areas outside of the primary work area.

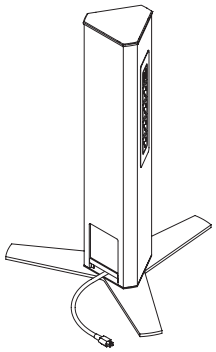

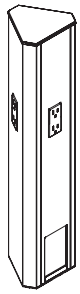

Hardwired — requires floor anchor

	Multiple simplexs/USB on a single face		Duplexes on 3 sides – Modular Power System*	
Step 1 — Power arrangement				
Hardwired	U8HU1P4H	1 USB 4 Simplex Hardwired	U8HSK3H	3 Sided Power Block Kit – Hardwired
Corded	U8HU1P4C	1 USB 4 Simplex Corded	N/A	
Step 2 — Hub				
	U6H2S	Hub – Non-Ported	U6H2P	Hub – Ported (3 Side Ports)
Step 3 — Faceplate				
	U3HTPCF	Collaborative Hub Faceplate	NA	
Step 4 — Top Trim				
	U3THFW Hub Trim for Freestanding w/o Beams			
Step 5 — Freestanding or Floor Anchored				
Freestanding**	U6HB3	Hub Base 3 Feet	NA	
Floor Anchored (hardware not supplied)	U3HAI	Hub Anchor – Internal		
	U3HAE	Hub Anchor – External (for use over floor box)		

*Order duplexes and base infeed separately for 3-sided hub.
**Freestanding hub needs 3 feet (U6HB3) unless anchored to floor.

Collaborative Hub (Page 62)
- Hubs can carry power and data.
- Hubs can be ordered as ported or non ported. For non ported hub see page 34.
- Hubs have one removable face for installation of power and data.
- Removable face has a sliding access door for in-feed cabling. In-feed can also enter through cut-out in underside of unit — see page 40 for dimensions.
- Collaborative ported hubs require power kits and circuit specific receptacles – each ordered separately. See pages 60-63.
- Hub base kits can be specified without leveling for collaborative applications.

Hub Faceplate (Page 62)
- Replaces the one removable hub face for installation of collaborative simplex power and data kit.

Hub Top Trim (Page 62)
- Required to finish top of a standalone hub where no beams are utilized.

Hub Base Kits (Page 62)
- Used in applications where hub is freestanding. Required when anchor kits are not used.
- Units have three feet. Each foot extends 9" from center, see illustration at left.
- Use non-leveling under U6H83 for collaborative standalone hubs.

Hub Floor Anchor Kits (Page 62)
- Floor anchor kits can be used to anchor a stand-alone hub to the floor and cannot be used in conjunction with a footed base.
- A floor anchor kit may be required with hard wired electrical depending on local code.
- Fastener hardware not supplied — use appropriate hardware for floor type.
- Use internal anchor kit U3HAI when hub is not directly over data or electrical floor box. Bracket and fasteners are under hub and not visible.
- Use external anchor kit U3HAE when hub is directly over data or electrical floor box. Brackets and fasteners are visible outside of the hub.
- Floor anchor kits can also be used to anchor hubs supporting beams if desired.

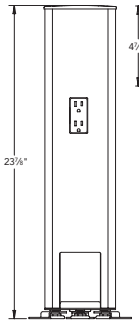

Hub with U3HAI base

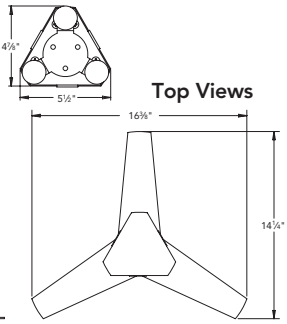

Top Views

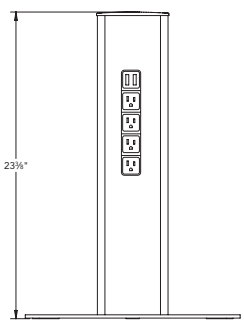

Hub with U6HB3 base

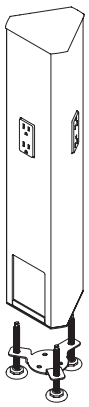

U3HAI Internal

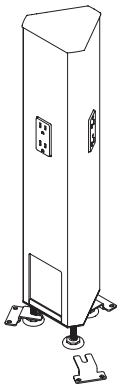

U3HAE External

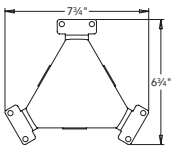

Collaborative Hub

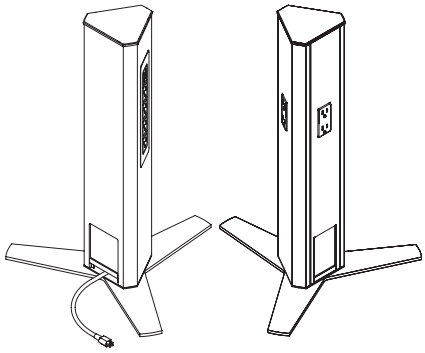

Description, Quantity, and Model Numbers for Collaborative Hubs (shown above)

	Non-Ported	Ported
Hub	1 – U6H2S	1 – U6H2P
Top Trim	1 – U3THFW	1 – U3THFW
Hub Faceplate	1 – U3HTPCF	N/A
Power Kit(s)	1 – U8HU1P4C	1 – U8HSK3H
Receptacles	N/A	3 – U87U501
In-feed	N/A	877006
Base	1 – U6HB3	1 – U6HB3

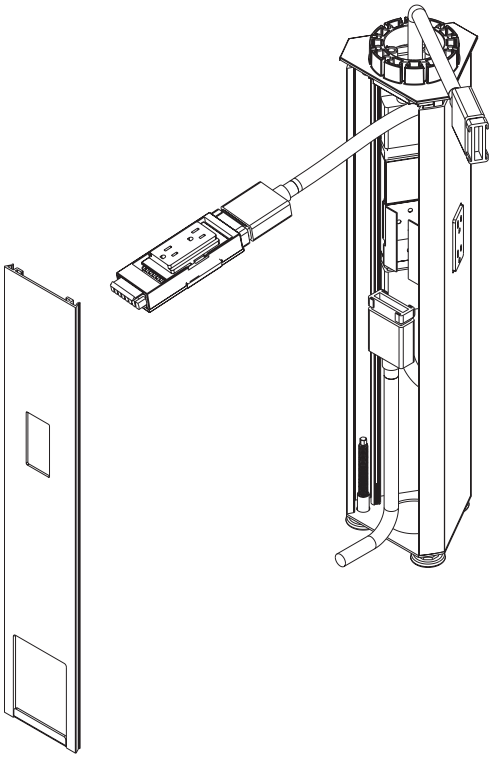

GSA Reference Page

Hub Collaborative Power Kits (page 63)

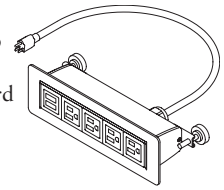

- Single sided power that can be located on hub cover face only.
- Can be either hardwired or corded — 72" cord or whip is standard.
- Requires collaborative hub faceplate model U3HTPCF, ordered separately, to replace standard faceplate on U6H2S hub non-ported.
- Cannot be used with powered beams or as a part of modular power system.
- Four power outlets and one USB are standard, anywhere from 2-8 outlets can be ordered as a special.
- One active USB and four power can be ordered as standard. Any combination can be ordered as a special.
- Simplexes can be oriented in any direction as a special.
- Outlet and cord color are available in black or white. Other colors are available as a special with extended lead times. Special colors are not color matched to any Allsteel colors.
- Face plate of power module can be specified in Black P27, Brilliant White PQ8, Silver PR6 and Brownstone P7D. Other core, select, and accent colors available as special order with extended lead times.

Hub 3-Sided Power Block Kits (page 63)

- 3-Sided power kit U8HSK3H requires hub ported U6H2P and can be used for either collaborative hub applications, freestanding beam applications, or in tethered beam applications. See illustration at left.
- Order in-feed and circuit specific duplex receptacles separately.
- Only one beam can be powered from a ported hub when using the 3-sided power kit. Requires beam-to-beam jumper U87JB, order separately.
- Requires in-feed cable.

Duplex Receptacles (page 63)

- Duplex receptacles snap into power blocks of power kits.
- Receptacles cannot be back-to-back in beam applications.
- Ordered separately, receptacles are available in eight colors and are labeled to indicate circuit number: 1, 2, 3, or 4.

Receptacle Color Recommended to Coordinate with Paint Color

Recommended Paint Color	Receptacle Color
Brilliant White — PQ8	White — EW
Carob — P52	Black — E4
Champagne Metallic — PR5	Muslin — EU
Fossil — P28	Flint — E9
Gunmetal Metallic— PR3	Brownstone — EY
Parchment — P93	Muslin — EU
Platinum Metallic — PR2	Loft — EV

Electrical Covers (page 63)

- Fits into duplex receptacle openings in Further ported beams or hubs in place of duplex receptacle.
- Specify paint color.

Electrical In-Feeds Cables (page 63)

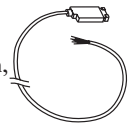

- In-feed cable connects to a power kit in the hub or beam, transverses through the beam, hub and/or power pole and terminates in a junction box.
- Available in sealtight cable in 6' or 12', or in flex cable in 12' or 18' lengths. Consult your electrician to ensure the planned electrical load and cabling is within permissible national and local code limits.

Collaborative Hub

For specification information see page 60.

GSA SIN 711-1

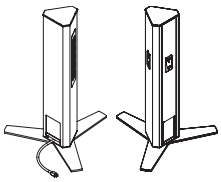

Description	Model	List Price Core	Select	Accent
Collaborative Hub — Kits (must order feet or anchor kit)				
Single Sided Hardwire (1 USB, 4 Simplex)	U6H2SCU1P4H S	$ 1565	$ 1580	$ 1601
Single Sided Corded (1 USB, 4 Simplex)	U6H2SCU1P4C S	$ 1508	$ 1523	$ 1544
Three Sided Hardwire (3 Duplexes — order duplexes and in-feed separately)	U6H2PC3 S	$ 1028	$ 1043	$ 1064

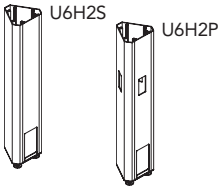

Hub — Seated Height				
Hub Non-Ported	U6H2S	$ 517	$ 532	$ 553
Collaborative Hub Ported (3 Side Ports)	U6H2P S	$ 568	$ 583	$ 604

NOTE: Order electrical components separately on page 63.

U3HTPCF

Hub Faceplate				
Collaborative Hub Faceplate	U3HTPCF S	$ 68	$ 71	$ 76

NOTE: Order electrical components separately on page 63.

U3THFW

Hub Top Trim				
Freestanding Top Trim (Triangular for hub without beams)	U3THFW S	$ 73	$ 76	$ 81

U6HB3

U3HAI

U3HAE

Hub Base Kit and Anchors				
Hub Base Kit — 3 Feet non-leveling	U6HB3 S	$ 155	$ 165	$ 181
Anchor — Internal (Black only)	U3HAI S	$ 42	N/A	N/A
Anchor — External (Core or Select)	U3HAE S	$ 42	$ 42	N/A

How to specify —	*1st Option:*	*2nd Option:*	*3rd Option:*	*4th Option:*
Select the Model Number from above.	**Electrical Color for Single Sided Hub Kit** *(if applicable)*:	**Trim Faceplate for Single Sided Hub Kit** *(if applicable)*:	**Paint** *(if applicable)*:	**Electrical Color for Three Sided Hub Kit** *(if applicable)*:
	BLK Black **WHT** White	**P27** Black **P8Q** Brilliant White **P7D** Brownstone **PR6** Silver	C S A	**P** Black
_ _ _ _ _ .	_ _ _	_ _ _	_ _ _	P

Examples: **U6H2SCU1PH.WHT.PR6.PR6** **U6H2P.P02**
U3HTPCF.P7B **U3HAI.P** **U3HAE.PR6**

S *Shippable by small-package carrier.*

Collaborative Hub

For specification information see page 61.

GSA SIN 711-1

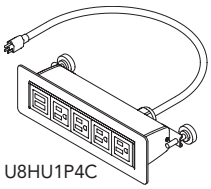

U8HU1P4C

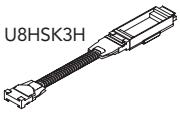

U8HSK3H

Description	Model	List Price
Hub Power Kits (Black or White)		
Collaborative — 1 USB / 4 Simplex (Hardwired)	**U8HU1P4H** S	$ 909
Collaborative — 1 USB / 4 Simplex (Corded)	**U8HU1P4C** S	$ 852
Hub 3-Sided Power Block Kit — Blocks for 3 Duplexes	**U8HSK3H** S	$ 388

U87U501

Duplex Receptacles		
Circuit 1	**U87U501** S	$ 38
Circuit 2	**U87U502** S	$ 38
Circuit 3 (3 + 1)	**U87U503** S	$ 38
Circuit 3 (2 + 2)	**U87U506** S	$ 38
Circuit 4 — isolated/dedicated	**U87U504** S	$ 38

USBEC2

Description	Model	Chicago Code Model	List Price Core	List Price Select	List Price Accent
Electrical Accessories					
Beam Electrical Covers — 2 Pack	**USBEC2** S	**USBEC2CH** S	$ 37	$ 37	$ 37
Beam Electrical Covers — 12 Pack	**USBEC12** S	**USBEC12CH** S	$ 130	$ 130	$ 130

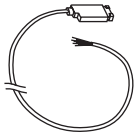

Description	Four-circuit 3 + 1 2 + 2	List Price
Electrical In-Feed Cables		
12' Flex Cable and Ceiling In-Feed	**A871912** S	$ 244
18' Flex Cable and Ceiling In-Feed	**A871918** S	$ 306
6' Sealtight Cable Power In-Feed	**A877006** S D	$ 247
12' Sealtight Cable Power In-Feed	**A877012** S	$ 298

D *Discontinued 12/31/2015*

How to specify —	*1st Option:*	*1st Option:*	*1st Option:*	*1st Option:*
Select the Model Number from above.	**Hub Collaborative Power Kits** *(if applicable)*: **BLK** Black **WHT** White	**Electrical Block or Infeed Color** *(if applicable)*: **P** Black	**Electrical Receptacle Color** *(if applicable)*:	**Paint Color Beam Electrical Covers** *(if applicable)*: G S A
U		P	E	

Examples: **U8HU1P4C.WHT** **U8HSK3H.P** **U87U501.E9**

S *Shippable by small-package carrier.*

Screens

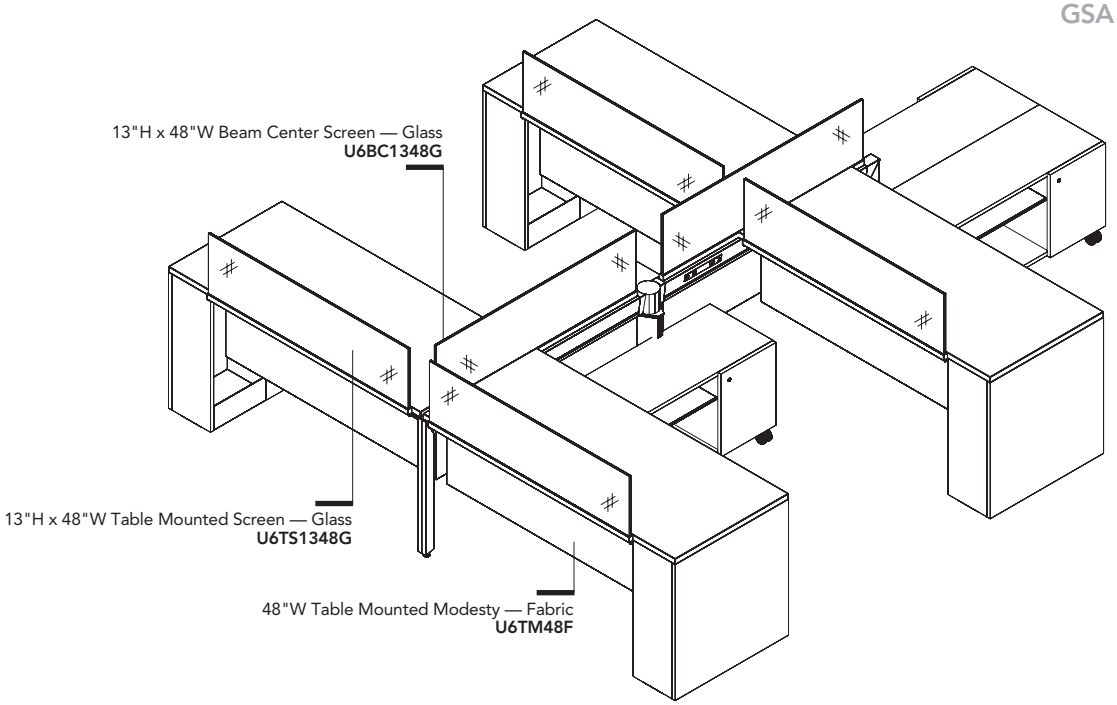

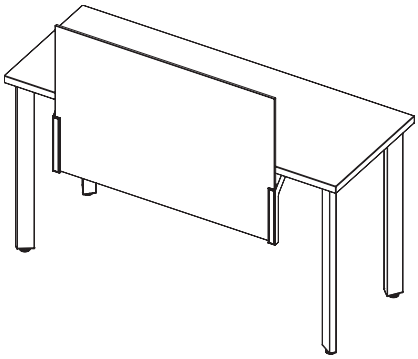

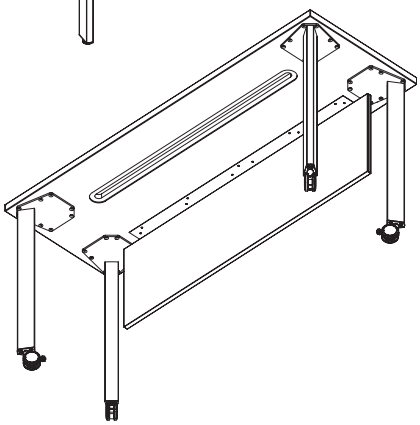

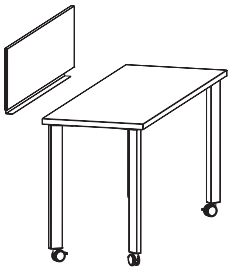

Fabric Beam Center Screens (page 66)
- Must use mounting top cap to secure to beam.
- Mounting top cap length must be equal to or less than total support run length.
- Must be equal to or less than total length of support run minus end supports.
- When using with a laterally mounted cubby with a screen, subtract at least 18" from width of screen.
- Must use split top cap kit when passing screen over a hub. The screen(s) must pass completely over hub or a gap will be present.

Fabric Beam Mounted Modesty Panels (page 66)
- Width must be equal to or less than beam length.

Fabric Table Mounted Screens (page 67)
- Subtract 12" from the width of the table/worksurface to allow for clearance of leg mounting plates. See illustration at left.

Fabric Table Mounted Modesty Panels (page 67)
- Subtract 12" from the width of the table/worksurface to allow for clearance of leg mounting plates. See illustration at left.
- Must be inset at least 3" from back edge of worksurface if used with table mounted or user-movable screens.

Glass Beam Center Screens (page 68)
- Must use mounting top cap to secure to beam.
- Mounting top cap length must be equal to or less than total support run length.
- Must be equal to or less than total length of support run minus end supports.
- When using with a laterally mounted cubby with a screen, subtract at least 18" from width of screen.
- Must use split top cap kit when passing screen over a hub. The screen(s) must pass completely over hub or a gap will be present.

Glass Table Mounted Screens (page 68)
- Subtract 12" from the width of the table/worksurface to allow for clearance of leg mounting plates. See illustration at left.
- Only allowed on 27" or deeper surfaces. Cannot be used as a modesty screen below a worksurface or beam.

Fabric User Movable Screens (page 69)
- Subtract 12" from the width of the table/worksurface to allow for clearance of leg mounting plates. See illustration at left.
- Screens are ¼" taller than 42½"H storage.

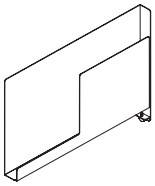

U6BL1221ML

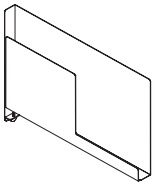

U6BL1221MR

Lateral Screen (page 69)

- Clamps to worksurface back edge via thumb screw. See illustrations at left.
- 1⅝" thick, 12"H x 20" or 26"D. Designed for front edge to sit back from edge of worksurface.
- Folder front stands 9"H from worksurface. Space for folders is 1½" and holds approximately 340 sheets of copy paper.
- Made from sheet metal.
- One sided storage (LH and RH options).

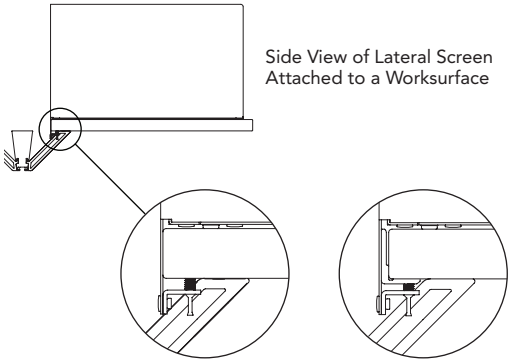

Side View of Lateral Screen
Attached to a Worksurface

Close-up of Attachment —
Without Accessories Rail and With Accessories Rail

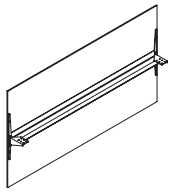

Z6DF2848L

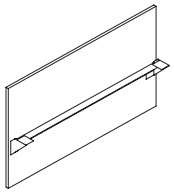

Z6DF2848D

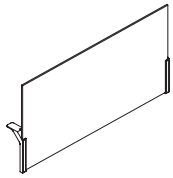

K6DFE2548G

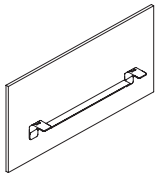

K6DFI2548L

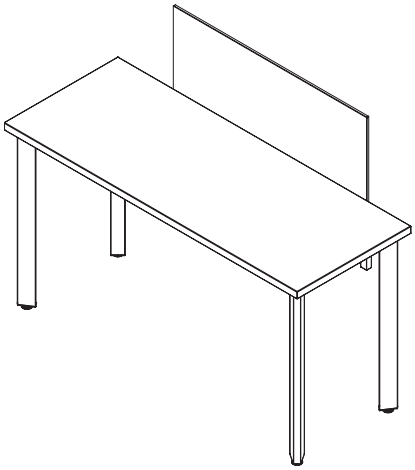

Using Stride® or Involve® Model Screens with Further

Stride Models w/Beam Mounted Surfaces (Stride page 143)

- All models — width must be at least 12" narrower than worksurface width to allow for clearance of leg mounting plates.

Involve Models w/Beam Mounted Surfaces (Storage page 148)

- Glass models — width must be at least 12" narrower than worksurface width to allow for clearance of leg mounting plates.
- Laminate models — width must be equal to, or less than worksurface width.

Stride Models w/Freestanding Tables (Stride page 143)

- Only allowed on 27" or deeper worksurfaces.
- All models — width must be at least 12" narrower than worksurface width to allow for clearance of leg mounting plates.

Involve Models w/Freestanding Tables (Storage page 148)

- Only allowed on 27" or deeper worksurfaces.
- Glass models — width must be at least 18" narrower than worksurface width to allow for clearance of leg mounting plates.
- Laminate models — width must be at least 6" narrower than worksurface width to allow for clearance of leg mounting plates.

Screens

Further™ — Fabric Screens and Modesty Panels

For specification information see page 64.

GSA SIN 711-1

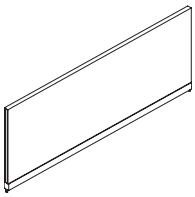

U6BC1336F

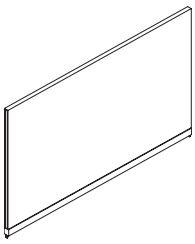

U6BC2036F

Description	Model	List Price Grade A	Grade B	Grade C	Grade D	Grade E	Grade F
13"H Beam Center Screens — Fabric							
24"W Beam Mounted	**U6BC1324F** S	$ 437	$ 455	$ 472	$ 513	$ 557	$ 607
30"W Beam Mounted	**U6BC1330F** S	$ 457	$ 478	$ 499	$ 550	$ 603	$ 664
36"W Beam Mounted	**U6BC1336F** S	$ 478	$ 503	$ 528	$ 587	$ 648	$ 721
42"W Beam Mounted	**U6BC1342F** S	$ 497	$ 525	$ 554	$ 622	$ 693	$ 777
48"W Beam Mounted	**U6BC1348F** S	$ 517	$ 549	$ 582	$ 658	$ 739	$ 833
54"W Beam Mounted	**U6BC1354F** S	$ 543	$ 578	$ 615	$ 701	$ 790	$ 895
60"W Beam Mounted	**U6BC1360F** S	$ 577	$ 616	$ 657	$ 751	$ 850	$ 965
20½"H Beam Center Screens — Fabric							
24"W Beam Mounted	**U6BC2024F** S	$ 497	$ 522	$ 548	$ 609	$ 670	$ 745
30"W Beam Mounted	**U6BC2030F** S	$ 517	$ 548	$ 579	$ 652	$ 728	$ 817
36"W Beam Mounted	**U6BC2036F** S	$ 536	$ 572	$ 608	$ 695	$ 784	$ 890
42"W Beam Mounted	**U6BC2042F** S	$ 556	$ 597	$ 639	$ 739	$ 841	$ 963
48"W Beam Mounted	**U6BC2048F** S	$ 596	$ 642	$ 690	$ 803	$ 918	$ 1055
54"W Beam Mounted	**U6BC2054F** S	$ 642	$ 694	$ 746	$ 872	$ 1001	$ 1154
60"W Beam Mounted	**U6BC2060F** S	$ 672	$ 729	$ 788	$ 926	$ 1068	$ 1238

How to specify —	*1st Option:*	*2nd Option:*	*3rd Option:*
Select the Model Number from above.	**Fabric:**	**Center Screens End Cap Paint Color** *(if applicable)*: C S A See inside front cover for finishes. Add $10 for Select or $26 for Accent Paints.	**Paint Color:** C S A See inside front cover for finishes. Add $10 for Select or $26 for Accent Paints.
U 6 B _ _ _ _ _ F .	_ _ _ _ _ .	_ _ _ .	_ _ _

Example: **U6BC1324F.APN911.PR6.PR6**

S *Shippable by small-package carrier.*

For specification information see page 64.

GSA SIN 711-1

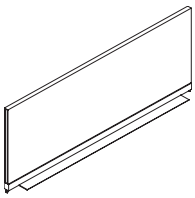

U6TS1336F

Description	Model	List Price Grade A	Grade B	Grade C	Grade D	Grade E	Grade F
13"H Table Mounted Screens — Fabric							
30"W Table Mounted	**U6TS1330F** S	$ 457	$ 478	$ 499	$ 550	$ 603	$ 664
36"W Table Mounted	**U6TS1336F** S	$ 478	$ 503	$ 528	$ 587	$ 648	$ 721
42"W Table Mounted	**U6TS1342F** S	$ 497	$ 525	$ 554	$ 622	$ 693	$ 777
48"W Table Mounted	**U6TS1348F** S	$ 517	$ 549	$ 582	$ 658	$ 739	$ 833
54"W Table Mounted	**U6TS1354F** S	$ 543	$ 578	$ 615	$ 701	$ 790	$ 895
60"W Table Mounted	**U6TS1360F** S	$ 577	$ 616	$ 657	$ 751	$ 850	$ 965

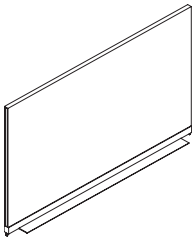

U6TS2036F

20½"H Table Mounted Screens — Fabric							
30"W Table Mounted	**U6TS2030F** S	$ 517	$ 542	$ 568	$ 629	$ 690	$ 765
36"W Table Mounted	**U6TS2036F** S	$ 536	$ 567	$ 598	$ 671	$ 747	$ 836
42"W Table Mounted	**U6TS2042F** S	$ 556	$ 592	$ 628	$ 715	$ 804	$ 910
48"W Table Mounted	**U6TS2048F** S	$ 596	$ 637	$ 679	$ 779	$ 881	$ 1003
54"W Table Mounted	**U6TS2054F** S	$ 642	$ 688	$ 736	$ 849	$ 964	$ 1101
60"W Table Mounted	**U6TS2060F** S	$ 672	$ 724	$ 776	$ 902	$ 1031	$ 1184

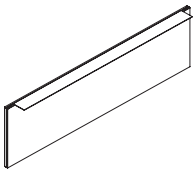

U6TM36F

14"H Table Mounted Modesty — Fabric							
18"W Table Mounted	**U6TM18F** S	$ 331	$ 345	$ 360	$ 394	$ 430	$ 471
24"W Table Mounted	**U6TM24F** S	$ 352	$ 371	$ 389	$ 433	$ 478	$ 531
30"W Table Mounted	**U6TM30F** S	$ 372	$ 394	$ 416	$ 470	$ 525	$ 590
36"W Table Mounted	**U6TM36F** S	$ 403	$ 429	$ 456	$ 518	$ 583	$ 659
42"W Table Mounted	**U6TM42F** S	$ 424	$ 454	$ 484	$ 556	$ 631	$ 718
48"W Table Mounted	**U6TM48F** S	$ 455	$ 489	$ 523	$ 605	$ 688	$ 788
54"W Table Mounted	**U6TM54F** S	$ 486	$ 523	$ 561	$ 652	$ 747	$ 858
60"W Table Mounted	**U6TM60F** S	$ 527	$ 568	$ 611	$ 711	$ 815	$ 937

How to specify —	*1st Option:*	*2nd Option:*	*3rd Option:*
Select the Model Number from above.	**Fabric:**	**Mounted Screens End Cap Paint Color** *(if applicable)*: C S A See inside front cover for finishes. Add $10 for Select or $26 for Accent Paints.	**Paint Color:** See inside front cover for finishes. Add $10 for Select or $26 for Accent Paints.
U 6 T _ _ _ _ _ F .	_ _ _ _ _ .	_ _ _ .	_ _ _

Examples: **U6BC1324F.APN911.PR6.PR6** **U6TM18F.APN911.PR6**

S *Shippable by small-package carrier.*

Screens

Further™ — Glass Screens

For specification information see page 64.

GSA SIN 711-1

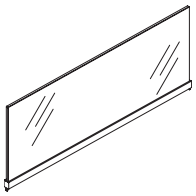
U6BC1336G

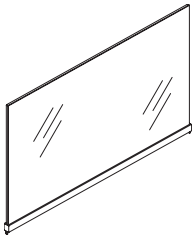
U6BC2036G

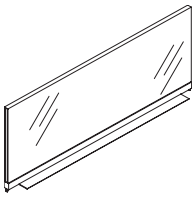
U6TS1336G

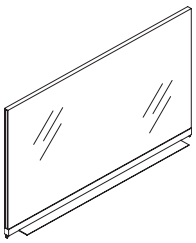
U6TS2036G

Description	Model	Core Paint Clear	Core Paint Frosted	Core Paint Writeable	Select Paint Clear	Select Paint Frosted	Select Paint Writeable	Accent Paint Clear	Accent Paint Frosted	Accent Paint Writeable
13"H Beam Center Screens — Glass										
24"W Beam Mounted	U6BC1324G S	$ 527	$ 568	$ 604	$ 537	$ 578	$ 614	$ 553	$ 594	$ 630
30"W Beam Mounted	U6BC1330G S	$ 543	$ 587	$ 626	$ 553	$ 697	$ 636	$ 569	$ 613	$ 652
36"W Beam Mounted	U6BC1336G S	$ 574	$ 623	$ 667	$ 584	$ 633	$ 677	$ 600	$ 649	$ 693
42"W Beam Mounted	U6BC1342G S	$ 616	$ 670	$ 719	$ 626	$ 680	$ 729	$ 642	$ 696	$ 745
48"W Beam Mounted	U6BC1348G S	$ 635	$ 694	$ 749	$ 645	$ 704	$ 759	$ 661	$ 720	$ 775
54"W Beam Mounted	U6BC1354G S	$ 682	$ 746	$ 801	$ 692	$ 756	$ 811	$ 708	$ 772	$ 827
60"W Beam Mounted	U6BC1360G S	$ 718	$ 787	$ 847	$ 728	$ 797	$ 857	$ 744	$ 813	$ 873
66"W Beam Mounted	U6BC1366G S	$ 801	$ 875	$ 940	$ 816	$ 890	$ 955	$ 840	$ 914	$ 979
72"W Beam Mounted	U6BC1372G S	$ 878	$ 958	$ 1028	$ 893	$ 973	$ 1043	$ 917	$ 997	$ 1067
78"W Beam Mounted	U6BC1378G S	$ 1007	$ 1092	$ 1167	$ 1022	$ 1107	$ 1182	$ 1046	$ 1131	$ 1206
84"W Beam Mounted	U6BC1384G S	$ 1043	$ 1136	$ 1219	$ 1058	$ 1151	$ 1234	$ 1082	$ 1175	$ 1258
90"W Beam Mounted	U6BC1390G S	$ 1085	$ 1188	$ 1276	$ 1100	$ 1203	$ 1291	$ 1124	$ 1227	$ 1315
96"W Beam Mounted	U6BC1396G S	$ 1136	$ 1244	$ 1343	$ 1151	$ 1259	$ 1358	$ 1175	$ 1283	$ 1382
20½"H Beam Center Screens — Glass										
24"W Beam Mounted	U6BC2024G S	$ 566	$ 620	$ 669	$ 576	$ 630	$ 679	$ 592	$ 646	$ 695
30"W Beam Mounted	U6BC2030G S	$ 582	$ 641	$ 696	$ 592	$ 651	$ 706	$ 608	$ 667	$ 722
36"W Beam Mounted	U6BC2036G S	$ 613	$ 677	$ 737	$ 623	$ 687	$ 747	$ 639	$ 703	$ 763
42"W Beam Mounted	U6BC2042G S	$ 676	$ 745	$ 810	$ 686	$ 755	$ 820	$ 702	$ 771	$ 836
48"W Beam Mounted	U6BC2048G S	$ 723	$ 797	$ 868	$ 733	$ 807	$ 878	$ 749	$ 823	$ 894
54"W Beam Mounted	U6BC2054G S	$ 775	$ 855	$ 930	$ 785	$ 865	$ 940	$ 801	$ 881	$ 956
60"W Beam Mounted	U6BC2060G S	$ 826	$ 911	$ 991	$ 836	$ 921	$ 1001	$ 852	$ 937	$ 1017
66"W Beam Mounted	U6BC2066G S	$ 909	$ 999	$ 1085	$ 924	$ 1014	$ 1100	$ 948	$ 1038	$ 1124
72"W Beam Mounted	U6BC2072G S	$ 987	$ 1082	$ 1173	$ 1002	$ 1097	$ 1188	$ 1026	$ 1121	$ 1212
78"W Beam Mounted	U6BC2078G S	$ 1239	$ 1347	$ 1446	$ 1254	$ 1362	$ 1461	$ 1278	$ 1386	$ 1485
84"W Beam Mounted	U6BC2084G S	$ 1296	$ 1415	$ 1523	$ 1311	$ 1430	$ 1538	$ 1335	$ 1454	$ 1562
90"W Beam Mounted	U6BC2090G S	$ 1374	$ 1498	$ 1611	$ 1389	$ 1513	$ 1626	$ 1413	$ 1537	$ 1650
96"W Beam Mounted	U6BC2096G S	$ 1549	$ 1678	$ 1797	$ 1564	$ 1693	$ 1812	$ 1588	$ 1717	$ 1836
13"H Table Mounted Screens — Glass										
30"W Table Mounted	U6TS1330G S	$ 543	$ 587	—	$ 553	$ 597	—	$ 569	$ 613	—
36"W Table Mounted	U6TS1336G S	$ 574	$ 623	—	$ 584	$ 633	—	$ 600	$ 649	—
42"W Table Mounted	U6TS1342G S	$ 616	$ 670	—	$ 626	$ 680	—	$ 642	$ 696	—
48"W Table Mounted	U6TS1348G S	$ 635	$ 694	—	$ 645	$ 704	—	$ 661	$ 720	—
54"W Table Mounted	U6TS1354G S	$ 682	$ 746	—	$ 692	$ 756	—	$ 708	$ 772	—
60"W Table Mounted	U6TS1360G S	$ 718	$ 787	—	$ 728	$ 797	—	$ 744	$ 813	—
20½"H Table Mounted Screens — Glass										
30"W Table Mounted	U6TS2030G S	$ 582	$ 641	—	$ 592	$ 651	—	$ 608	$ 667	—
36"W Table Mounted	U6TS2036G S	$ 613	$ 677	—	$ 623	$ 687	—	$ 639	$ 703	—
42"W Table Mounted	U6TS2042G S	$ 676	$ 745	—	$ 686	$ 755	—	$ 702	$ 771	—
48"W Table Mounted	U6TS2048G S	$ 723	$ 797	—	$ 733	$ 807	—	$ 749	$ 823	—
54"W Table Mounted	U6TS2054G S	$ 775	$ 855	—	$ 785	$ 865	—	$ 801	$ 881	—
60"W Table Mounted	U6TS2060G S	$ 826	$ 911	—	$ 836	$ 921	—	$ 852	$ 937	—

How to specify —

Select the Model Number from above.

1st Option:

Glass:

LC Clear
LF Frosted
LM Writeable

2nd Option:

Paint Color:

C S A

U 6 B C _ _ _ _ G . L _ . _ _ _

Examples: **U6BC1324G.LF.PR6** **U6TS1330G.LC.PR6**

S *Shippable by small-package carrier.*

For specification information see pages 64-65.

GSA SIN 711-1

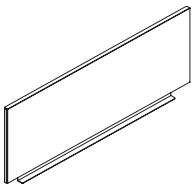

U6TU1336F

Description	Model	List Price Grade A	Grade B	Grade C	Grade D	Grade E	Grade F
13"H User Movable Screens — Fabric							
18"W Movable	**U6TU1318F** S	$ 405	$ 419	$ 434	$ 468	$ 504	$ 545
24"W Movable	**U6TU1324F** S	$ 426	$ 444	$ 461	$ 502	$ 546	$ 596
30"W Movable	**U6TU1330F** S	$ 457	$ 478	$ 499	$ 550	$ 603	$ 664
36"W Movable	**U6TU1336F** S	$ 478	$ 503	$ 528	$ 587	$ 648	$ 721
42"W Movable	**U6TU1342F** S	$ 497	$ 525	$ 554	$ 622	$ 693	$ 777
48"W Movable	**U6TU1348F** S	$ 517	$ 549	$ 582	$ 658	$ 739	$ 833
54"W Movable	**U6TU1354F** S	$ 543	$ 578	$ 615	$ 701	$ 790	$ 895
60"W Movable	**U6TU1360F** S	$ 577	$ 616	$ 657	$ 751	$ 850	$ 965

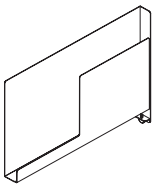

U6BL1221ML

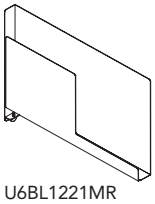

U6BL1221MR

Description	Model	List Price Core	Select	Accent
12"H Lateral Screens — Metal				
20"D Left	**U6BL1221ML** S	$ 295	$ 316	$ 347
26"D Left	**U6BL1227ML** S	$ 314	$ 335	$ 366
20"D Right	**U6BL1221MR** S	$ 295	$ 316	$ 347
26"D Right	**U6BL1227MR** S	$ 314	$ 335	$ 366

How to specify —	*1st Option:*	*2nd Option:*	*3rd Option:*
Select the Model Number from above.	**Fabric** *(if applicable)*:	**Movable Screen End Cap or Lateral Screen Paint Color** *(if applicable)*: C S A See inside front cover for finishes. Add $10 for Select or $26 for Accent Paints on movable screens.	**Movable Screen Mounting Bracket Paint Color:** C S A See inside front cover for finishes. Add $10 for Select or $26 for Accent Paints on movable screens.
U 6 T U 1 3 _ _ F .	_ _ _ _ _ .	_ _ _ .	_ _ _

Example: **U6TU1324F.APN911.PR6.PR6** **U6BL1221ML.PR6**

S *Shippable by small-package carrier.*

Storage

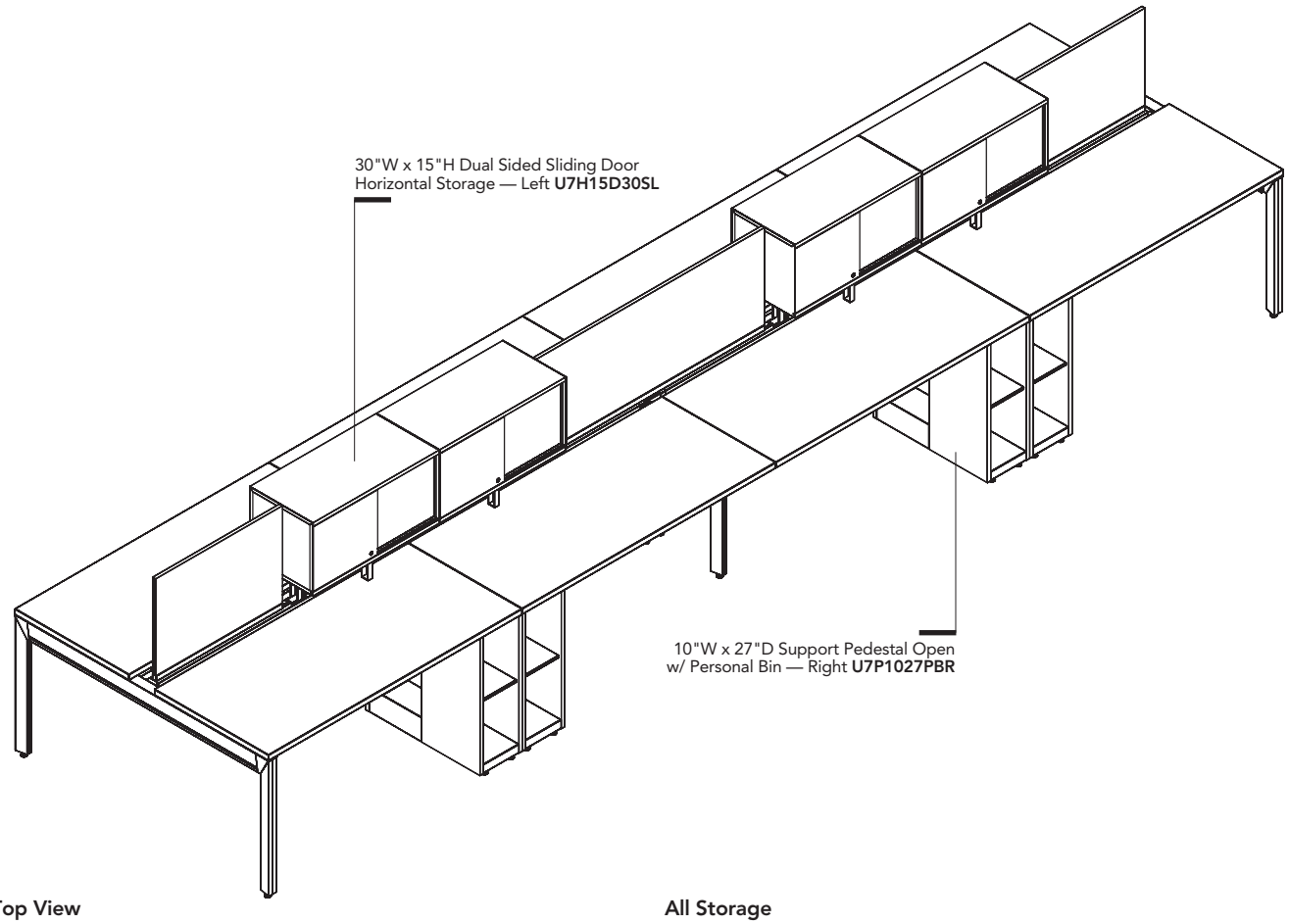

Top View

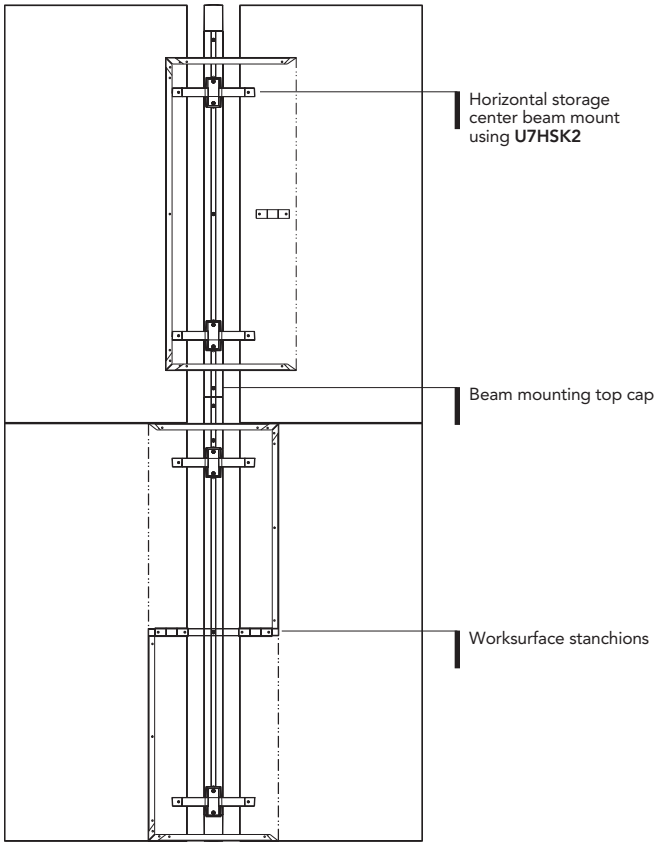

All Storage

- All storage is made from ¾" thick with particle board core with top and bottom surfaces finished in high pressure laminate. Horizontal storage sides and back are painted steel.
- Edge band is laser fused edge banding made of 1mm thick ABS plastic — flat edge trim only.
- Cam and pin construction. Storage is plinth base only unless unit is mobile.
- Available in solid and woodgrain laminates, models with doors or drawers are available with a two-tone option.
- Pull options: arch, square, linear, straight. All standard in PR6 Silver.
- Locks have a silver finish.

Horizontal Storage (pages 74-75)

- Available in open and sliding door models, as single sided or dual sided.
- Top and bottom are high pressure laminate, sides and back are painted steel.
- Beam mounting top cap must be used, length must match length of beam.
- Horizontal storage cannot be panel or wall mounted.
- Units cannot be mounted directly on worksurface, requires stanchion kit ordered separately. Kit includes stanchions and installation hardware.
- Laterally mounted storage can overhang worksurface a maximum of 12". Worksurface stanchion is flush to edge of the worksurface when storage is overhanging worksurface, and is 8½" from edge of worksurface when storage is not overhanging worksurface.
- Beam mounted lateral stanchion kit (4-pack) U7HSK2 is used for single standard mounted storage or for dual laterally mounted storage. Kit includes ganging bracket for dual mounted storage units. See illustration and matrix at left.
- Beam mounted stanchion (2-pack) U7HSB2 is used for mounting a laminate shelf to beam. See illustrations and matrix on page 65.

Mounting Horizontal Storage

Top View

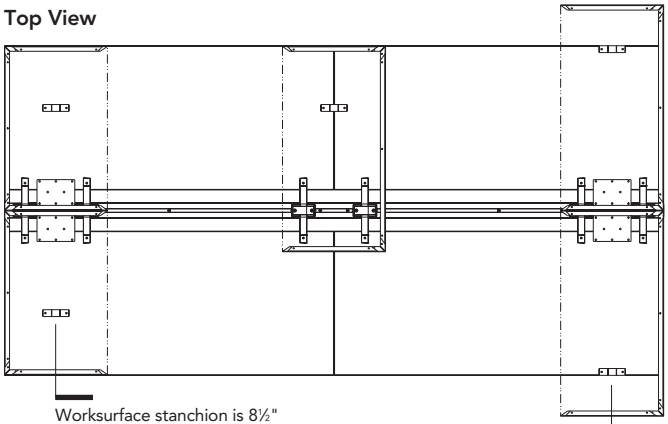

Worksurface stanchion is 8½" from edge of worksurface when storage is not overhanging worksurface

Worksurface stanchion is flush to edge of the worksurface when storage is overhanging worksurface

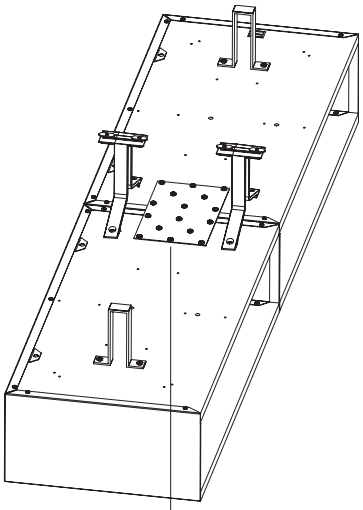

Kit **U7HSK2** includes ganging bracket for dual mounted storage units

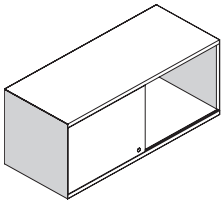

U7H15S36S

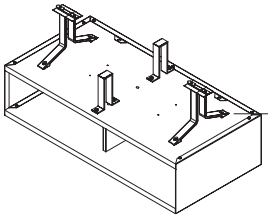

Center beam mount using **U7HSK2**

Storage Width	Center Beam Mount	Dual Lateral with 21"D Worksurfaces	Dual Lateral with 27"D Worksurfaces
24"	U7HSK2	U7HSK2	U7HSK2
30"	U7HSK2	U7HSK2	U7HSK2
36"	U7HSK2	U7HSK2	U7HSK2
42"	U7HSK2	N/A	U7HSK2
48"	U7HSK2	N/A	N/A
54"	U7HSK2	N/A	N/A
60"	U7HSK2	N/A	N/A
72"	U7HSK2	N/A	N/A

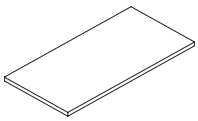

U7HS30

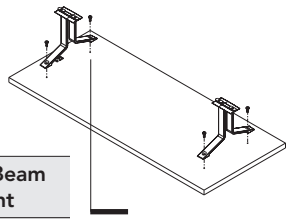

Beam mounted stanchion (2-pack) **U7HSB2** is used for mounting laminate shelf to beam

Shelf Width	Center Beam Mount
24"	U7HSB2
30"	U7HSB2
36"	U7HSB2
42"	U7HSB2

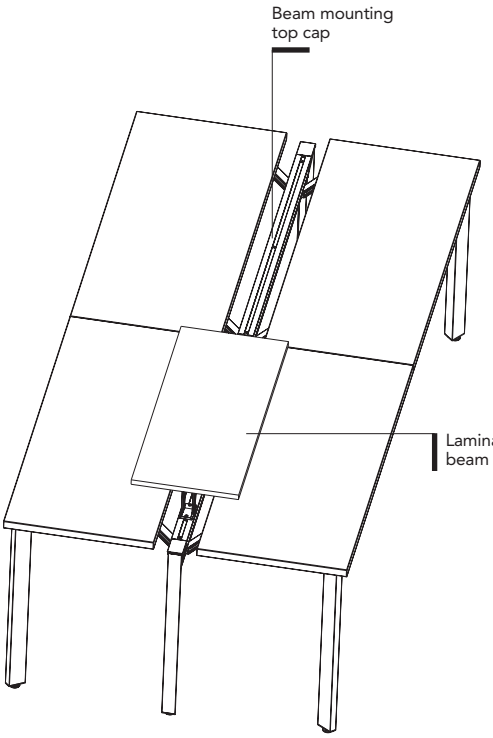

Beam mounting top cap

Laminate shelf to beam using **U7HSB2**

Storage

GSA Reference Page

Mounting Horizontal Storage with Surface Mounted

Worksurface Storage Stanchion Kit U7HSK1

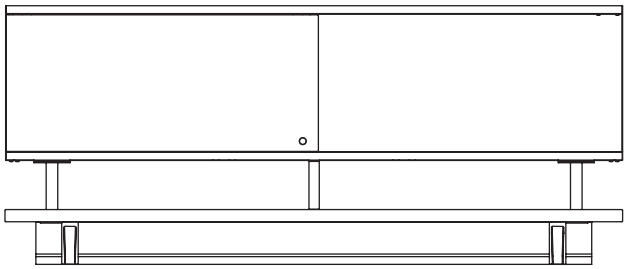

Front View

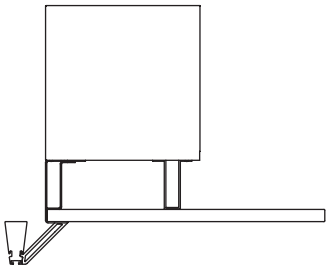

Side View

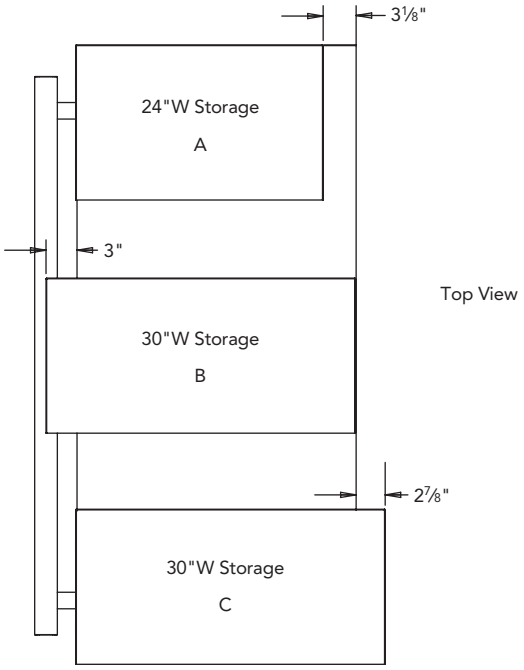

Top View

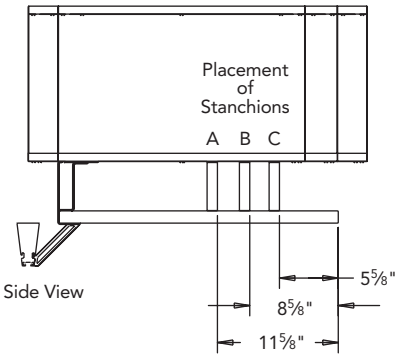

Side View

Worksurface Storage Stanchion Kit — U7HSK1 (page 74)

- Allows for use with beam mounted screens in conjunction with horizontal storage.
- Works with single sided applications such as aisle ways or up against a wall.
- Back stanchions mount to underside of worksurface — no pilot holes on surface.
- Back stanchions are made of 10 gauge steel.
- Front stanchion rests on worksurface top.
- Front stanchion is aluminum extrusion.
- Storage unit can be mounted such that back of unit is flush with back edge of worksurface or such that back of unit is centered on beam.
- When locating flush to back edge of worksurface uses pilot holes on bottom of horizontal storage to locate stanchions for proper support; no pilot holes for when mounting on beam centerline.
- Extending storage unit beyond beam centerline is not recommended — should be using standard beam mounted stanchion kit U7HSK2.
- Can be used to mount horizontal storage either parallel with beam or perpendicular to beam.
- Can be used with 7½"H or 15"H storage
  - 7½"H aligns to 13½"H Further/Stride screens/42½"H towers
  - 15"H aligns to Further/Stride 20"H screens/50"H towers
- Recommended for use only on tethered set ups.

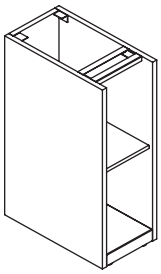

U7P1021P

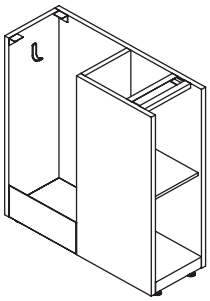

U7P1027PBR

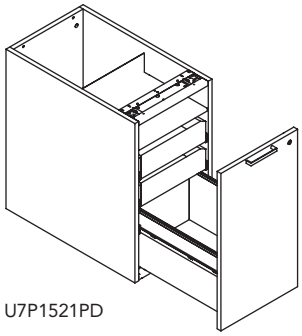

U7P1521PD

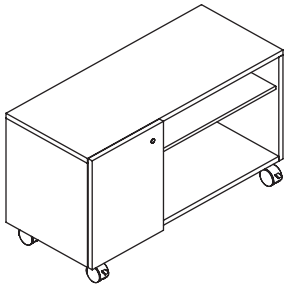

U7MC203615HL

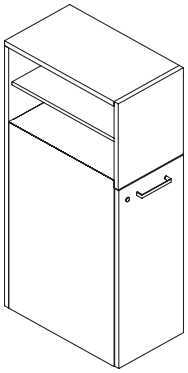

U7T421221ADR

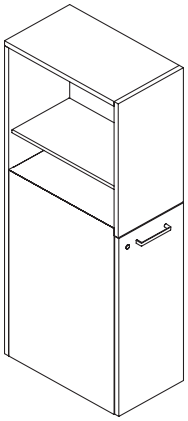

U7T501221ADR

Open Support Pedestals (page 76)
- Constructed of high pressure laminate, shelves are painted steel.
- Open Support Pedestals may be used to add additional stability — see Further Stability Requirements on page 20.
- Support pedestals may be used to create freestanding desks, storage depth must match worksurface depth.
- 27"D models have a coat/bag hook located in back of unit.

Pull-Out Drawer Support Pedestal (page 76)
- Case is constructed of high pressure laminate with fused laser edge banding. Shelf is painted steel.
- Box and file drawers are miter fold, ½" thick particle board, polypropylene wrapped.
- Configuration is box/box/file and one shelf at top of unit.
- Shelf is not adjustable but can be removed.
- All drawers hidden behind single laminate front.
- Straight , linear, arch and square pulls available as options.
- 1⅝" leveling.
- Cannot be used as a freestanding, standalone unit.
- Outside overall dimensions: 15⅝"W and 21" or 27"D
- Box drawers extend 16" for both model depths.
- File drawers extend 16" on 21"D models and 20" on 27"D models.
- Front to back filing, standard letter size
- One lock, located in upper right hand corner of drawer front.
- Two-tone laminate option for drawer fronts
- Can be used to make a freestanding desk.

Mobile Credenza (page 76)
- Constructed of high pressure laminate, shelf is painted steel.
- Mobile credenza has a hinged door with lock, no pull.
- Front casters are locking, back casters are non-locking.

Side Access Towers (page 77)
- Top and sides are high pressure laminate, shelves are painted steel.
- Side Access Towers may be used to add additional stability — see Further Stability Requirements on page 20.
- 12" wide towers must be attached to a worksurface.
- Z6LB tower "L" bracket required when supporting a worksurface with a tower — storage depth must match worksurface depth.
- Tower drawers do not extend fully — 27"D towers have a 25"D drawer with 20" travel slides; 21"D towers have a 19"D drawer with 16" travel slides.
- 27"D models have a coat/bag hook located in back of drawer.

"L" Tower Bracket (page 77)
- Z6LB tower "L" bracket required when supporting a worksurface with a tower.
- Storage depth must match worksurface depth.

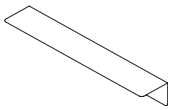

Storage

Further™ — Horizontal

Laminate with Metal

GSA SIN 711-1

For specification information see pages 70-73.

Shaded surfaces — sides, back, and nitch septum are metal.

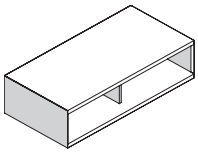

U7H07S30P

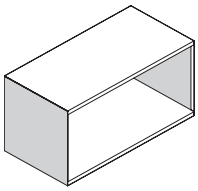

U7H15S30P

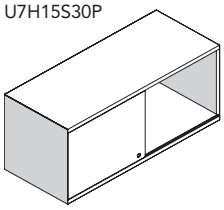

U7H15S36S

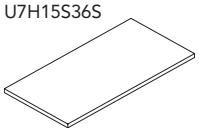

U7HS30

Description	Model	List Price L1	L2	L3
7½"H Nitch — Single Sided 15"D				
24"W	U7H07S24P S	$ 718	$ 754	$ 790
30"W	U7H07S30P S	$ 820	$ 861	$ 902
36"W	U7H07S36P S	$ 923	$ 969	$ 1015
42"W	U7H07S42P S	$ 1025	$ 1076	$ 1128
15"H Open Horizontal Storage — Single Sided 15"D				
24"W	U7H15S24P S	$ 872	$ 916	$ 959
30"W	U7H15S30P S	$ 1025	$ 1076	$ 1128
36"W	U7H15S36P S	$ 1179	$ 1238	$ 1297
15"H Horizontal Storage — Single Sided with Sliding Door 15"D				
24"W	U7H15S24S S	$ 1284	$ 1349	$ 1412
30"W	U7H15S30S S	$ 1323	$ 1390	$ 1455
36"W	U7H15S36S S	$ 1382	$ 1451	$ 1520
42"W	U7H15S42S S	$ 1442	$ 1514	$ 1587
48"W	U7H15S48S S	$ 1481	$ 1555	$ 1629
54"W	U7H15S54S S	$ 1521	$ 1597	$ 1673
60"W	U7H15S60S S	$ 1579	$ 1658	$ 1737
Beam Mounted Shelf 15"D				
24"W	U7HS24 S	$ 410	$ 431	$ 451
30"W	U7HS30 S	$ 436	$ 458	$ 480
36"W	U7HS36 S	$ 462	$ 486	$ 508
42"W	U7HS42 S	$ 487	$ 512	$ 536

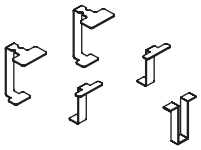

Description	Model	List Price Core	Select	Accent
Worksurface Storage Stanchion				
Horizontal Storage Single Sided Stanchion Kit	U7HSK1	$ 259	$ 265	$ 274

How to specify —

Select the Model Number from above.

U 7 H _ _ _ _ _ _ . _ _ _ _ . _ _ _ . _ _ _ _

1st Option:

Paint *(if applicable)*:

C S A

Upcharge:	Select	Accent
Nitch	$ 21	$ 51
Open	$ 31	$ 77
24"– 42"W Sliding	$ 31	$ 77
48"– 60"W Sliding	$ 36	$ 90

2nd Option:

FSC Certified Wood *(if applicable)*:

FSC Select for FSC Certified Wood

X No FSC

3rd Option:

Laminate *(if applicable)*:

Continued below ▼

4th Option:

Matching Edge *(if applicable)*:

_ _ .

5th Option:

Door Laminate *(if applicable)*:

_ _ _ _

6th Option:

Matching Edge *(if applicable)*:

_ _ .

7th Option:

Lock Option *(if applicable)*:

STD Standard

OMT Omit Lock Core (deduct $18)

8th Option:

Lock Color *(if applicable)*:

EL Silver

E L

Examples: U7H15S24S.PR6.FSC. LM11EV.LM11EV.STDEL
U7HS24.X.LM11EV U7HSK1.PR6

S *Shippable by small-package carrier.*

Storage

Further™ — Dual Sided Horizontal

Laminate with Metal

GSA SIN 711-1

For specification information see pages 70-73.

Shaded surfaces — sides, back, and septum are metal.

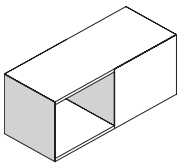

"L" Storage Left

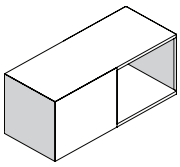

"R" Storage Right

Description	Model Add "L" for Left or "R" for Right	List Price L1	L2	L3
15"H Open Horizontal Storage — Dual Sided 15"D				
24"W	**U7H15D24P** ⊔ S	$ 974	$ 1023	$ 1071
30"W	**U7H15D30P** ⊔ S	$ 1025	$ 1076	$ 1128
36"W	**U7H15D36P** ⊔ S	$ 1066	$ 1119	$ 1173
42"W	**U7H15D42P** ⊔ S	$ 1097	$ 1152	$ 1207
48"W	**U7H15D48P** ⊔ S	$ 1128	$ 1184	$ 1241
54"W	**U7H15D54P** ⊔ S	$ 1210	$ 1270	$ 1331
60"W	**U7H15D60P** ⊔ S	$ 1241	$ 1304	$ 1365
66"W	**U7H15D66P** ⊔ S	$ 1292	$ 1355	$ 1416
72"W	**U7H15D72P** ⊔ S	$ 1343	$ 1411	$ 1477

NOTE: Add suffix "L" for storage on the Left or "R" for storage on the Right.

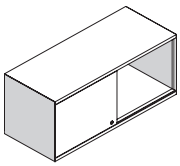

"L" Storage Left

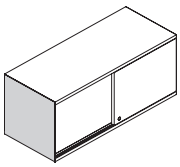

"R" Storage Right

15"H Horizontal Storage — Dual Sided with Sliding Door 15"D				
24"W	**U7H15D24S** ⊔ S	$ 1521	$ 1597	$ 1673
30"W	**U7H15D30S** ⊔ S	$ 1560	$ 1638	$ 1716
36"W	**U7H15D36S** ⊔ S	$ 1599	$ 1679	$ 1759
42"W	**U7H15D42S** ⊔ S	$ 1658	$ 1741	$ 1824
48"W	**U7H15D48S** ⊔ S	$ 1717	$ 1803	$ 1889
54"W	**U7H15D54S** ⊔ S	$ 1816	$ 1907	$ 1997
60"W	**U7H15D60S** ⊔ S	$ 1914	$ 2009	$ 2106
66"W	**U7H15D66S** ⊔ S	$ 1957	$ 2052	$ 2149
72"W	**U7H15D72S** ⊔ S	$ 1999	$ 2095	$ 2193

NOTE: Add suffix "L" for storage on the Left or "R" for storage on the Right.

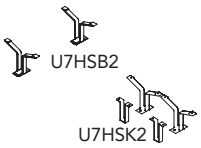

Description	Model	List Price Core	Select	Accent
Beam Mounted Storage Stanchions				
Shelf Stanchion Kit 2-Pack	**U7HSB2** S	$ 157	$ 163	$ 172
Horizontal Storage Stanchion Kit 4-Pack	**U7HSK2** S	$ 314	$ 322	$ 335

How to specify —

Select the Model Number from above.

Suffix for Storage

L Left
R Right

U 7 H _ _ _ _ _ _ _ . _ _ _ _ . _ _ _ . _ _ _ _

1st Option:

Paint
(if applicable):

C S A

Storage Upcharge:	Select	Accent
24"– 36"W	$ 36	$ 90
42"– 48"W	$ 41	$103
54"– 60"W	$ 46	$116
66"– 72"W	$ 51	$128

2nd Option:

FSC Certified Wood
(if applicable):

FSC Select for FSC Certified Wood
X No FSC

3rd Option:

Case Laminate
(if applicable):

Continued below ▼

4th Option:

Matching Edge
(if applicable):

_ _ .

5th Option:

Door Laminate
(if applicable):

_ _ _ _

6th Option:

Matching Edge
(if applicable):

_ _ .

7th Option:

Lock Option
(if applicable):

STD Standard
OMT Omit Lock Core (deduct $18)

8th Option:

Lock Color
(if applicable):

EL Silver

E L

Examples: **U7H15D24SL.PR6.FSC.LM11EV.LM11EV.STDEL** **U7HSK2.PR6** S *Shippable by small-package carrier.*

Storage

Further™ — Pedestals and Credenzas

For specification information see pages 70-73.

Laminate

GSA SIN 711-1

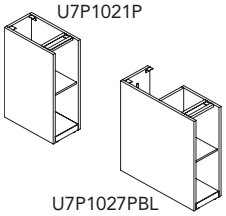

Description	Model	List Price L1	L2	L3
Open Support Pedestal — 10"W x 28"H				
21"D	**U7P1021P** S	$ 1077	$ 1131	$ 1185
27"D w/Personal Bin Left	**U7P1027PBL** S	$ 1262	$ 1326	$ 1388
27"D w/Personal Bin Right	**U7P1027PBR**	$ 1262	$ 1326	$ 1388

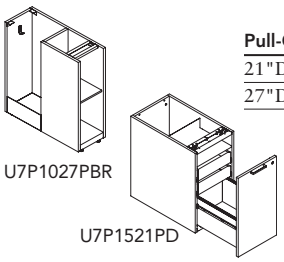

Description	Model	L1	L2	L3
Pull-Out Drawer Support Pedestal — 15"W x 28"H				
21"D — Shelf/Box/Box/File	**U7P1521PD** S	$ 1538	$ 1615	$ 1692
27"D — Shelf/Box/Box/File	**U7P1527PD** S	$ 1640	$ 1722	$ 1804

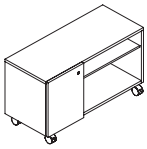

Description	Model	L1	L2	L3
Mobile Credenza — 15"D x 20"H				
36"W — Hinged Door Left	**U7MC203615HL** S	$ 1903	$ 1997	$ 2093
36"W — Hinged Door Right	**U7MC203615HR** S	$ 1903	$ 1997	$ 2093

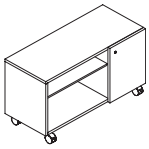

Description	Model	List Price Grade 1	Grade 2	Grade 3	Grade 4	Grade 5	Grade 6	Grade 7	Grade 8	Grade 9	Grade 10	Grade 11	Grade 12
Seat Cushion — For Further Mobile Credenza only (Specify seating fabric — no leathers)													
36"W x 15"D	**K5CT1536SC**	$ 236	$ 270	$ 293	$ 318	$342	$ 364	$ 387	$ 412	$ 435	$458	$ 483	$ 518

How to specify —

Select the Model Number from above.

U 7 _ _ _ _ _ _ _ .

1st Option:

Pull Type *(if applicable)*:

- **AP** Arch
- **HP** Straight (Involve)
- **LP** Linear (Stride)
- **SP** Square

2nd Option:

Pull Color *(if applicable)*:

- **PR6** Silver

3rd Option:

Metal Shelves Paint Color *(if applicable)*:

C S A

Upcharge:

	Select	Accent
Open/21"D Pull-Out	$ 12	$ 31
Open w/Bin/27"D Pull-Out	$ 15	$ 39
Credenza	$ 15	$ 40

_ _ _ .

4th Option:

FSC Certified Wood *(if applicable)*:

- **FSC** Select for FSC Certified Wood
- **X** No FSC

_ _ _ .

Continued below ▼

5th Option:

Laminate *(if applicable)*:

_ _ _ _

6th Option:

Matching Edge *(if applicable)*:

_ _ _ .

7th Option:

Door Laminate *(if applicable)*:

_ _ _ _

8th Option:

Matching Edge *(if applicable)*:

_ _ _ .

9th Option:

Lock Option *(if applicable)*:

- **STD** Standard
- **OMT** Omit Lock Core (deduct $18)

_ _ _

10th Option:

Lock Color *(if applicable)*:

- **EL** Silver

E L

Only Option for Seat Cushion:

Specify Seating Upholstery

_ _ _ _ _ _

Examples: **U7P1027PBL.PR6.FSC.LM11EV.LM11EV.STDEL**
K5CT1536SC.PNS012

S ***Shippable by small-package carrier.***

For specification information see pages 70-73.

Laminate

GSA SIN 711-1

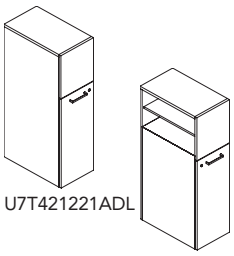

Description	Model	List Price L1	List Price L2	List Price L3
42½"H Side Access Towers — 12"W				
21"D w/Left Hand Side Access (shown)	**U7T421221ADL** S	$ 2168	$ 2277	$ 2385
27"D w/Left Hand Side Access	**U7T421227ADL** S	$ 2268	$ 2382	$ 2495
21"D w/Right Hand Side Access (shown)	**U7T421221ADR** S	$ 2168	$ 2277	$ 2385
27"D w/Right Hand Side Access	**U7T421227ADR** S	$ 2268	$ 2382	$ 2495

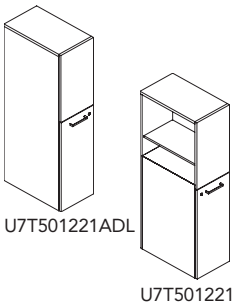

Description	Model	List Price L1	List Price L2	List Price L3
50"H Side Access Towers — 12"W				
21"D w/Left Hand Side Access (shown)	**U7T501221ADL** S	$ 2307	$ 2423	$ 2538
27"D w/Left Hand Side Access	**U7T501227ADL** S	$ 2405	$ 2525	$ 2646
21"D w/Right Hand Side Access (shown)	**U7T501221ADR** S	$ 2307	$ 2423	$ 2538
27"D w/Right Hand Side Access	**U7T501227ADR** S	$ 2405	$ 2525	$ 2646

Description	Model	Core Paint List Price	Select Paint List Price
"L" Tower Bracket — for Towers			
"L" Tower Bracket for 21"D or 27"D	**Z6LB**	$ 46	$ 58

How to specify —	*1st Option:*	*2nd Option:*	*3rd Option:*	*4th Option:*
Select the Model Number from above.	**Pull Type** *(if applicable)*: **AP** Arch Pull **LP** Linear Pull (Stride) **SP** Square Pull **HP** Straight Pull (Involve)	**Paint Color:** **Arch Pull** **E4** Black **EL** Silver **EZ** Bronze **Linear and Straight Pull** **PR6** Silver **Square Pull** **EL** Silver	**Metal Shelves Paint Color** *(if applicable)*: C S A Upcharge: Select $26 Accent $65	**FSC Certified Wood** *(if applicable)*: **FSC** Select for FSC Certified Wood **X** No FSC
_ _ _ _ _ _ _ _ .	_ _	_ _ _ .	_ _ _ .	_ _ _ .

Continued below ▼

5th Option:	*6th Option:*	*7th Option:*	*8th Option:*	*9th Option:*	*10th Option:*
Laminate *(if applicable)*:	**Matching Edge** *(if applicable)*:	**Door Laminate** *(if applicable)*:	**Matching Edge** *(if applicable)*:	**Lock Option** *(if applicable)*: **STD** Standard **OMT** Omit Lock Core (deduct $18)	**Lock Color** *(if applicable)*: **EL** Silver
_ _ _ _	_ _ .	_ _ _ _	_ _ .	_ _ _	E L

Examples: **U7T421221ADL.SPEL.FSC.LM11EV.LM11EV.STDEL Z6LB.PR6** S *Shippable by small-package carrier.*

Extensions™

EXTENSIONS

Introduction

Overview 78

Organization Tools

Working with Organization Tools 79-81

Worksurface Mounted Rails and Accessories 82

Beam Mounted Shelves and Hook 83

Laptop Drawer and Technology Modules 83

Ergonomic Accessories

Working with Ergonomic Accessories 84-85

Monitor Arms, Tablet Holders, Keyboard Support, and CPU Hammock 86

Illumination

Working with Illumination 88

Link™ LED Lights and Wand™ LED Light 89

Extensions — Introduction

Extensions accessory line by Allsteel is designed to help you create your own space.

- **Create a unique space**

  Each person is unique, no one person works exactly like another, and different tasks require different tools. Extensions work tools allow each person the ability to create a unique environment that is all their own. Lots of paper to manage? Need active files within arm's reach? Want to maximize your worksurface space? Need light somewhere other than below a cabinet? Whatever the task, we have the tools to accommodate your workstyle.

- **Create a comfortable space**

  With a full line of organization, ergonomic, and illumination tools, Extensions allow you to create a comfortable, ergonomic work area. Organization tools keep important items visible and within your reach. Ergonomic tools help you stay comfortable while working. Illumination tools allow you to put your light where it suits you.

- **Create an organized space**

  Tired of all the piles of paper building up on your worksurface? Organization tools house your materials and keep them in an orderly fashion. With a combination of hanging or freestanding organizational accessories, Extensions let you manage everything from paper to your phone.

- **Organization tools**

  Work tools are a durable metal construction. Extensions allow you to manage your workspace smartly with tools like the phone stand to elevate the phone off the worksurface, vertical paper tray, and pencil holder.

  Increase your efficiency with organization!

- **Ergonomic tools**

  Ergonomics is more than just comfort, it's flexibility and safety. Monitor Arms offer versatile adjustability while providing optimum comfort for the eyes, neck, and shoulders.

- **Illumination tools**

  Sleek and flexible, our lighting components offer you choices. LED tasklights' slim design blends in with its surrounding while utilizing energy-efficient LED technology. The Link light offers award-winning style to a highly versatile and energy efficient light.

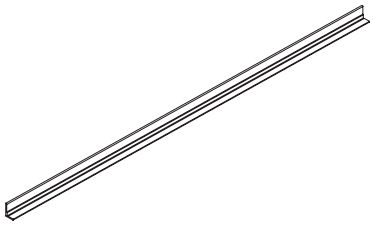

Worksurface Mounted Rail (page 82)
- Aluminum extrusion designed to mount to flat edge worksurfaces. Comes with rail and hardware for mounting.
- Mounted rail extends ¾" on underside of worksurface which may interfere with the mounting of storage.
- Widths available 12" through 96" in 6" increments.
- Passes behind worksurface bracket on tethered applications.
- Can pass across seams of ganged worksurfaces in tethered applications.
- For freestanding applications rail should be 6" shorter than worksurface (i.e. 54" rail for 60" worksurface).

Rail Accessories

Side View

Top View

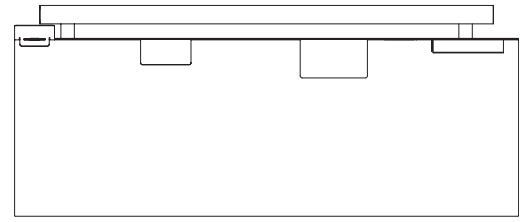

Phone/ Tablet Stand | Pencil Holder | Rail Mounted Shelf | Vertical Paper Tray

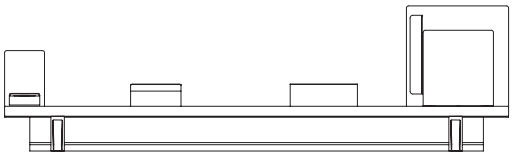

Front View

Rail Mounted Accessories

Not recommended for use on panel systems due to fit up issues created with worksurface and panel. Adding accessory rail shifts worksurface — 3/16" away from panel along that edge. Forcing worksurface into place crushes fabric tile and with tiles of other material (steel, marker board, etc) is likely to scratch, dent, or otherwise damage tile during installation.

U9TM Phone/Tablet Stand (page 82)
- 6⅝"H x 4¾"W and angles back 1¾".
- Has a ¼" x 1" slot in bottom flange to allow for routing cables. Requires 1¾" space behind worksurface edge in order to be used.

U9TP Pencil Holder (page 82)
- 2⅝"H x 6"W x 3"D.
- Holds approximately twenty #2 pencils.

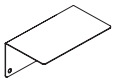

U9TS Rail Mounted Shelf (page 82)
- 8"W x 4½"D and sits 2⅝" higher than top of worksurface.
- Holds up to 8 pounds.

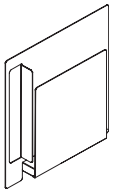

U9TF Vertical Paper Tray (page 82)
- Sits 12"H x 1½"W x 12"D from back of worksurface.
- Folder front stands 9" high from worksurface top, 1¼" space holds about 280 sheets of copy paper.

U9WTC Cord Organizer (page 82)
- Can attach to both bottom of worksurface or slides into rail.
- 4"W x ⅞"D, made from sheet metal.
- Top sits flush with worksurface if mounted to worksurface.
- 4 cable cut outs: 2 – .250" diameter and 2 – 0.147" diameter; .250" diameter cut outs are centered between the .147" diameter cut outs.

Extensions™

Organization — Working with Rail and Accessories

GSA Reference Page

U9BH Beam Mounted Hook (page 83)
- 1" wide, made from sheet metal.
- User movable along slot on beam side.
- Holds 25 pounds.

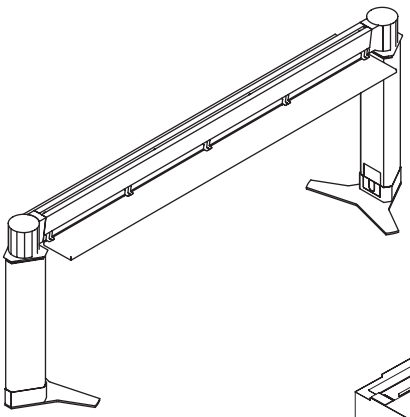

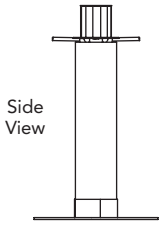

Beam Mounted Shelf — U9XXBMS (page 83)
- Mounts to beam using wire manager clip model U9BWMC (ordered separately — see page 43).
- Widths 24" through 60" in 6" increments.
- 0.429" thick sheet metal x 5"D.
- Cannot be used in conjunction with low capacity wire managers (U9XXBWLCM).
- Can be used in conjunction with high capacity wire managers (U9XXBWHCM). See page 43.
- Can pass across in-line support leg but not across a hub.
- Cannot be used with below beam electrical.

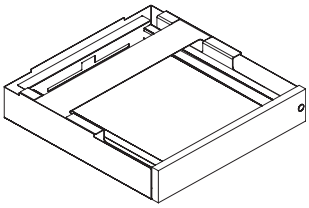

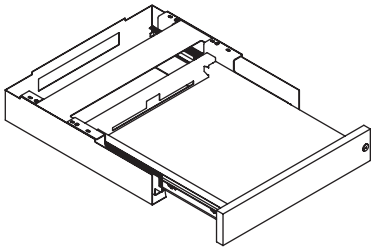

Laptop Drawer — U7WDA (page 83)
- Drawer body made of sheet metal.
- Drawer front made of ¾" particle board with high pressure laminate on both sides and fused laser edge banding.
- Core removable lock is located on right side drawer front
- 17⅝"W x 18"D x 3⅜"H Outside (interior 13"W x 16"D x 1⅞"H)
- Minimum surface depth is 21" for surfaces not using an external stiffener; and 27" for surfaces using an external stiffener.
- Drawer extends 16"
- Maximum load: 45 lbs (functional BIFMA load)
- Drawer assembly and cover have cut out in back to allow for cables to exit drawer.
- Distance from floor to bottom of unit w/glides fully retracted is 24¾".
- Does not interfere with Further leg mounting plates so drawer can be placed directly next to either a system or table leg.
- When being placed next tower storage using the tower ell bracket (Z6LB) to support surface the drawer must be inset 3" to clear the ell bracket.
- Can be placed directly next to any support storage from any Allsteel product line (excluding towers).
- Flat brackets — drawer must be offset 3" from seam between surfaces to clear the bracket. See illustration at left.
- Can be used with rabbet edge worksurface models but there will be a larger reveal between surface and drawer.
- Can be used with knife edge worksurface models but reveal and depth need to be considered.

Flat Brackets

Front View

Top View

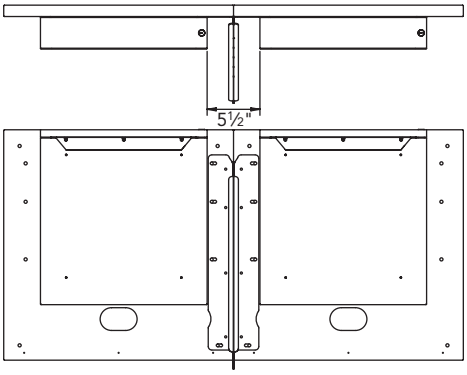

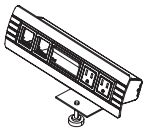

Technology Modules (page 83)

- Can be mounted by clamping to worksurface.
- Must be installed at time of initial worksurface installation if mounting between a worksurface and panel.
- The USB hub allows simultaneous powering of four USB-A devices. The USB hub is a charger only, no ability to connect to a PC. The charging capability is limited and may not charge all devices.

Byrne's Docking Station for iPod® and iPhone® (page 83)

- The iDoc charges and syncs with patent pending Roc.in.Doc™ technology eliminating the need for charging adapters.
- The mount provides quick access to the iPod or iPhone display for easy user control.
- Contact Byrne to check for compatibility with the latest technology.

Worksurface Power/Data Module (page 83)

- Provides easy access to technology at primary worksurface.
- Mounts to edge of a worksurface and requires ⅜" gap. Consider whether ⅜" gap will work with layout.
- Must be mounted at time of initial worksurface installation if mounting between a worksurface and a panel. Maintaining ⅜" gap may not be possible with worksurfaces that are panel wrapped.

Accessories

Further™ — Worksurface Mounted Rail and Accessories

For specification information see page 79.

GSA SIN 711-1

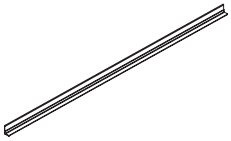

Description	Model	List Price Core	Select	Accent
Accessories Rail — Worksurface Mounted				
12"W	U912WTR S	$ 68	$ 70	$ 73
18"W	U918WTR S	$ 73	$ 75	$ 78
24"W	U924WTR S	$ 83	$ 85	$ 88
30"W	U930WTR S	$ 93	$ 98	$ 103
36"W	U936WTR S	$ 104	$ 109	$ 114
42"W	U942WTR S	$ 114	$ 119	$ 124
48"W	U948WTR S	$ 119	$ 127	$ 131
54"W	U954WTR S	$ 124	$ 132	$ 136
60"W	U960WTR S	$ 130	$ 140	$ 145
66"W	U966WTR S	$ 155	$ 165	$ 170
72"W	U972WTR S	$ 176	$ 186	$ 191
78"W	U978WTR S	$ 248	$ 258	$ 263
84"W	U984WTR S	$ 259	$ 271	$ 280
90"W	U990WTR S	$ 274	$ 286	$ 295
96"W	U996WTR S	$ 290	$ 305	$ 316
Rail Mounted Accessories				
Phone/Tablet Stand — 6½"H x 4¾"W	U9TM S	$ 102	$ 108	$ 117
Pencil Holder — 2½"H x 6"W x 3"D	U9TP S	$ 62	$ 67	$ 72
Shelf — 8"W x 4½"D; 2½" above top of worksurface	U9TS S	$ 75	$ 81	$ 90
Vertical Paper Tray — 12"H x 1⅜"W x12"D	U9TF S	$ 112	$ 118	$ 127
Cord Organizer				
4"W x ⅞"D Metal with 4 cable cutouts	U9WTC S	$ 111	$ 114	$ 119

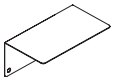

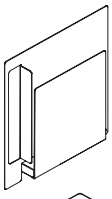

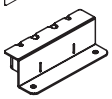

How to specify —	*1st Option:*
Select the Model Number from above.	**Paint:**

U 9 .

Examples: **U912WTR.PR6** **U9TF.P7G**

S *Shippable by small-package carrier.*

Accessories

Further™ — Hook, Shelf, Drawer, and Tech Modules

For specification information see pages 80-81.

GSA SIN 711-1

Description	Model	List Price Core	List Price Select	List Price Accent
Beam Mounted Hook				
1"W Metal Beam Hook for backpack or bag	**U9BH** S	$ 52	$ 54	$ 60

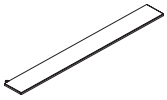

Beam Mounted Metal Shelf — 5"D (order mounting clips separately — see page 43)				
24"W	**U924BMS**	$ 99	$ 105	$ 114
30"W	**U930BMS**	$ 109	$ 115	$ 124
36"W	**U936BMS**	$ 119	$ 127	$ 140
42"W	**U942BMS**	$ 130	$ 138	$ 151
48"W	**U948BMS**	$ 140	$ 150	$ 166
54"W	**U954BMS**	$ 155	$ 165	$ 181
60"W	**U960BMS**	$ 176	$ 188	$ 207

U9BWMC

Wire Manager Clips (also used for Beam Mounted Shelf)				
5 Pack of Clips	**U9BWMC** S	$ 52	$ 55	$ 60

Note: See chart on page 41 for quantity of clips required.

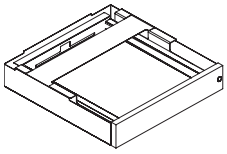

Laptop Drawer - Locking, laminate front, metal case				
17⅝"W x 18"D x 3⅜"H (Interior 13"W x 16"D x 1⅞"H)	**U7WDA** S	$ 961	$ 976	$ 992

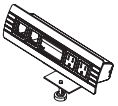

Description	Model	List Price
Technology Modules — Worksurface Clamp (EL Silver only)		
2 Power, 4 USB Hub	**A87P2U1C** S	$ 580
2 Power, 1 iPod Hub	**A87P2D1C** S	$ 708
2 Power, 1 USB, and 1 iPod Hub	**A87P2U1D1C** S	$ 863

Worksurface Power/Data Module (PR6 Silver only)		
2 Simplex receptacles, 1 data position	**A870302**	$ 218

How to specify —	*1st Option:*	*2nd Option:*	*3rd Option:*	*4th Option:*	*5th Option:*	*6th Option:*
Select the Model Number from above.	**Laminate** *(Drawer front if applicable)*: See inside front cover for finishes.	**Edge** *(Drawer edge if applicable)*: See inside front cover for finishes.	**Paint** *(If drawer, list exterior case color here)*: See inside front cover for finishes. Power/Data Module PR6 Silver only.	**Paint** *(Interior Drawer if applicable)*: See inside front cover for finishes.	**Lock** *(if applicable)*: **STD** Standard **OMT** Omit Lock Core (Deduct $18)	**Lock Color and Tech Modules** *(if applicable)*: **EL** Silver
_____ .	____	___ .	___ .	___ .	___ .	E L

Examples: **U9BH.PR6** **U7WDA.LM11EV.P27.PR6.STDEL**

S ***Shippable by small-package carrier.***

Extensions™

Working with Ergonomic Accessories

GSA Reference Page

MONITOR ARMS	ZW8 for Tool Tile	ZW8 Single	ZW8 Dual	ZW8 Single-HD	ZW8 Dual-HD
Allsteel Model:	**ZW810T**	**ZW810S**	**ZW820D**	**ZW810H**	**ZW820DH**
		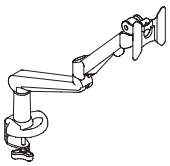	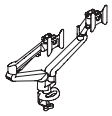	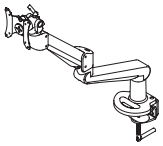	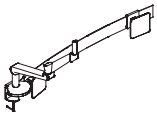
Features:					
Monitor rotation	180°	180°	180°	180°	180°
Monitor Extension	15"	21"	21"	22¼"	26¾"
Monitor retraction	3½"	3½"	3½"	3½"	3½"
Monitor tilt adjustment	+30°/-25°	+30°/-25°	+30°/-25°	+85°/-25°	+35°/-25°
Arm Height adjustment	11¾"	6½" to 19½" (13")	6½" to 19½" (13")	9" to 23" (14")	9" to 23" (14")
Monitor Weight capacity (maximum approved weight)	6½ to 16 lbs.	6½ to 18 lbs.	6½ to 18 lbs. per arm	17½ to 44 lbs.	12 to 38.5 lbs. each
Mounting option	Stride rail mount*	Desk clamp or grommet included	Desk clamp or grommet included	Desk clamp or grommet included	Desk clamp or grommet included
360° lockout feature	No	Yes	Yes	No	No
VESA compatibility	75mm and 100mm	75mm and 100mm	75mm and 100mm	75mm and 100mm	75mm and 100mm
Laptop Tray compatible	Yes	Yes	Yes	No	No
Tool Tile / Stride Bench compatible	Yes	No	No	No	No
Pole height	N/A	N/A	N/A	N/A	N/A
Maximum width per monitor	N/A	N/A	25"	25"	25"
Worksurface requirements — Desk Clamp	N/A	⅞" to 2" thick	⅞" to 2" thick	⅞" to 2" thick	⅞" to 2" thick
Worksurface requirements — Grommet Mount	N/A	⅞" to 2" thick; hole diameter 5/16" to 2"	⅞" to 2" thick; hole diameter 5/16" to 2"	⅞" to 2" thick; hole diameter 5/16" to 2"	⅞" to 2" thick; hole diameter 5/16" to 2"
Environmental info	99% Recycled content	99% Recycled content	99% Recycled content	99% Recycled content	99% Recycled content

*ZW810T is NOT approved for Tool Rail Models EASRxx or EAHSRxx that attach to system panel slots or hutches.

ZW8 Series Monitor Arms (page 86)

- Versatile adjustability with a refined design and effortless, pneumatic fingertip adjustment.
- Multiple points of adjustment, including 360° swivel at two points, 21" extension and 13" of height adjustment, and a 180° lockout feature.
- Monitor tilts +30°/-25°.
- Tension adjustment feature at two locations to accommodate monitor weight and desired tilt tension.
- Maximize use of worksurface with ability to retract to minimal footprint of 3½", making ZW8 ideal for shallow worksurfaces.
- Model includes grommet and worksurface mounting options.
- Integrated cable management.
- Desk clamp mounts to surfaces ⅞" to 2" thick; grommet mount requires hole diameter of 5/16" to 2" wide, and accommodates surfaces up to 2" thick.
- Single arm supports 6½ to 18 lbs.; dual arm offers perfect horizontal alignment, and each arm supports 6½ to 18 lbs.
- ZW8 for tool tile is compatible on Allsteel tool tiles and Stride bench rail includes one dynamic extension limb. Arm extension is 15" from tile/rail, height adjustment 12".
  (**Not approved for tool rail models EASRxx or EAHSRxx that attach to system panel vertical slots or hutches.**)
- ZW810S and ZW820D will fit all depths of Stride double-sided benches. Interference with support beam on 54" bench, desk clamp will not install flush to edge of worksurface, but will allow power access door to close completely.
- Mounting location on Stride single-sided bench and screen-based bench may be impacted by location of connecting brackets and supports.
- VESA 75mm and VESA 100mm compatible.
- Quick release feature simplifies monitor installation and exchanges.

ZW8 Heavy Duty Series (page 86)

- ZW810H heavy duty arm supports 7.6 to 44 lbs. in total weight.
- ZW820DH supports weight capacity 12 to 38.5 lbs. combined (to accommodate 5.5 lbs. weight of crossbar).
- Single arm features 22¼" extension, dual arm extends 26¾".
- Height adjustment range of 9" to 23" (14" total).
- Features 360° rotation at 3 points.
- Integrated cable management.
- Tension adjustment feature at two locations to accommodate monitor weight and desired tilt tension.
- Quick release feature simplifies monitor installation and exchanges.
- Monitor rotates 180° and tilts +85°/-35°.
- Dual arm crossbar length of 41"; monitors can be positioned by sliding along crossbar to accommodate various sizes. Can accommodate up to two 24" diagonal monitors (total outside casing dimension of 38" wide).
- Cannot be installed on 54" Stride double-sided bench due to interference with support beam.
- Mounting location on Stride single-sided bench and screen-based bench may be impacted by location of connecting brackets and supports.

Laptop Tray (page 86)

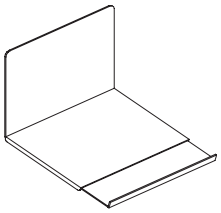

- Adjustable laptop tray can be used on Z W810S and ZW820D.
- Features adjustable depth of 11¾" to 17¼" to accommodate docking stations along with laptop computer.
- Width 12".
- Designed with ventilation holes for adequate heat dissipation.
- Non-skid protective pads included to prevent laptop from sliding.
- Weight of laptop tray 7 lbs; include when calculating total weight of tray + laptop to comply with weight capacity.

AKM1 Keyboard Support w/Mousepad (page 86)

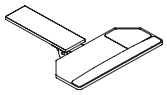

- Simple, spring-assisted mechanism provides 6¼" of height adjustment.
- Features soft-touch knob for simultaneous height and tilt adjustments.
- +10°/-15° tilt adjustment and 360° rotation provides support of neutral position of shoulders, arms, and wrists while accommodating multiple working postures.
- Accommodates keyboard and mouse on the same level
- Includes detachable leatherette-covered gel palm rest, nonslip pad, mouse pad, mouse guard, and cord management clips.
- Keyboard platform made of 90% post-consumer recycled materials and completely recyclable. Free of formaldehydes and carcinogens and emits no VOCs.

CPU Hammock™ (page 86)

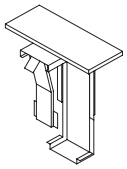

- Features 360° swivel with 13½" ball bearing glide track.
- Load capacity 55 lbs.
- Fits CPUs 5" to 20" in overall height and 3" to 6" in width.
- Height adjustable from 16" to 23" below worksurface.
- No tools required to make adjustments.
- Features a textured, silver paint finish.

Extensions™

Ergonomics — Monitor Arms / Keyboard Supports / CPU Holder

For specification information see pages 84-85.

GSA SIN 711-1

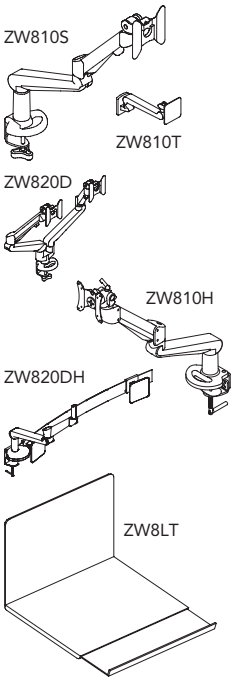

Description	Model		List Price
Monitor Arms — ZW8 Series			
Single — Desk Clamp	**ZW810S**	S	$ 354
Single — Mounts to Toolrail or Tool Tile	**ZW810T**	S	$ 354
Dual — Desk Clamp	**ZW820D**	S	$ 606
Conversion Kit — from Single-to-Dual	**ZW82KIT**	S	$ 354
Single Monitor — for Heavy Duty Monitor	**ZW810H**	S	$ 537
Dual Monitor — for Heavy Duty Monitors	**ZW820DH**	S	$ 920
Laptop Tray	**ZW8LT**	S	$ 227

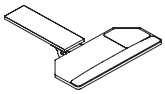

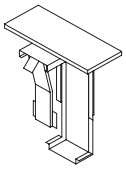

Articulating Keyboard Support with Integrated Mousepad (Black only)			
25"W x 10½"D (Mounting clearance 17"D)	**AKM1**	S	$ 296
CPU Hammock™ (Silver only)			
Adustable Height CPU Holder with 360° swivel	**ACPU4**	S	$ 178

How to specify —	*1st Option:*
Select the Model Number from above.	**Color for ZW Series:** **SVR** Silver

_ _ _ _ _ _ . S V R

Examples: **ZW810S.SVR** **ZW8LT.SVR** **AKM1** **ACPU4**

S *Shippable by small-package carrier.*

Extensions™

Link™ Light

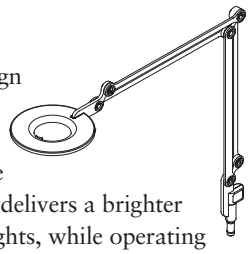

Link's simple forms, slim profile, and expressive details make a surprising design statement in any workplace. The playful lamp head offers 180-degree movement for natural and precise adjustability. The concentrated array of high-power LEDs delivers a brighter light output than standard fluorescent lights, while operating cooler for consistent, long-lasting, and uniform-quality light. Plus, its efficient design elegantly conserves the amount of materials required, paring them down to their most essential. Engineered for effortless disassembly, Link is 97 percent recyclable.

Wand™ Task Light

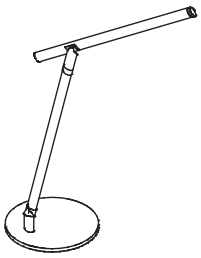

Wand freestanding task light offers a clean, simple design along with powerful LED technology to illuminate the workspace. The swivel base and arm tilt allow users to position the light just where they need it. The 7.7 watt LED light offers efficiency and long life, providing up to 25 years of daily use. The slim, sleek design makes it easy to integrate into any workspace. Wand task light is 97% recyclable. Optional Occupancy Sensor available.

Link Light (page 89)

- Single- or dual-arm style.
- 3300K color temperature, 7.5 watts.
- Available in two soft-touch colors (Silver and Black).
- Mounting options include a freestanding base, worksurface edge clamp, or tool rail bracket. Each allows for unobstructed lamp rotation.
- Freestanding base is 9½" x 9½".
- Cord length: 9' with detachable power adapter.
- The lamp head forms the handle, offering 180-degree up/down movement.
- Low Profile worksurface clamp allows for minimal clearance conditions but must be installed before worksurface.
- Power is delivered through a conductive aluminum skin, eliminating internal wiring.
- L-shaped base sits in the corner, using minimal workspace.
- Meets California Title 24 Energy Efficiency Standards.
- Link Light is UL, CE, and RoHS compliant.
- Actual length of model LED18U is 19".
  Actual length of model LED36U is 37¼".

Wand LED Freestanding Task Light (page 89)

- Available in Silver or White. 9'4" cord is Silver.
- Full range dimming from 100% — 10% with last state memory.
- More efficient than original Wand light with brighter and broader range of light.
- Uses 7.7 watts at highest setting and as low as 1 watt at its lowest setting, providing 85 to 12 footcandles of light, respectively (16" above worksurface).
- 7½" round swivel base and 16½"H tilt arm allow versatile positioning of the 13" lampshade.
- Designed for 50,000 hours of life, providing up to 25 years of daily use. Warranty — 5 years (fixture); 3 years (power supply).
- Color Temperature: 3500K. Color Rendering Index (CRI): 80.
- Materials: aluminum arm and lampshade, steel base.
- Weight: 4.4 lbs. 97% recyclable, 76% post-consumer.
- Certifications: UL and CUL. TAA compliant.
- Occupancy sensor available with automatic shut-off after 6 minutes if no motion is detected.

For specification information see pages 88.

Open Market / GSA SIN 711-1

Open Market

Description	NEW! Model	List Price
Link™ LED Light		
Link LED Lamp, 18" Single Arm	**LNKSA** S	$ 422
Link LED Lamp, 13"/13" Dual Arm	**LNKDA** S (shown)	$ 450
Link Freestanding Base	**LNKFS** S	$ 113
Link Low Profile Worksurface Clamp	**LNKCL** S	$ 70
Link Tool Tile Attachment	**LNKPM** S	$ 70

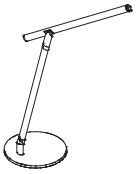

Wand™ LED Task Light (Silver or White)		
Freestanding LED Task Light w/base	**WANDFS** S	$ 258
Freestanding LED Task Light w/base and Occupancy Sensor	**WANDFSOC** S	$ 366

D *Discontinued 12/31/2015*

How to specify —

Select the Model Number from above.

| | | | | | | | | . | | | |

1st Option:

Color (for Link Light):

SVR Silver
BLK Black D

(for Wand LED):

SVR Silver
WHT White

Examples: **LNKDA.SVR** **WANDFS.WHT**

S *Shippable by small-package carrier.*

Appendix

Further Laminate Storage

Standard Options

- Random Keying — The factory will assign key(s) arbitrarily using key numbers from chart below.
- Omit Lock Core — The factory will omit lock cores. Removable lock core kits with specific key number must be ordered to facilitate keying alike in the field.

Replacing Lock Cores

- Lock must be in the unlocked position.
- Insert core removal key and pull core straight out.
- Insert new core with core removable key, hold core into lock and withdraw core removal key.
- Retain original core for future use.
- On Persona Pedestals, open top drawer and hold lock bars in unlocked position before removal of core.

	Random Keying	Omit Lock Core	Key Numbers	Lock Core Kit	Master Key
Further Laminate Storage	X	X	101E-225E	ALKF23C	AMKF22

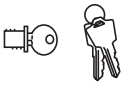

Description	Model	List Price
Brushed Chrome Removable Lock Core Kit	**Key Numbers 101E-225E**	
Used on metal and painted wood casegoods product produced after 2/3/97; A980, A990, and A940 Series Vertical Files; Persona Pedestals produced after 8/22/09; Reach Storage units produced after 10/5/09; and Receding Door Overheads produced after 8/1/10. Includes one core, two keys, one core removal tool, adapter and instructions	**ALKF23C** S	**$ 18**

Master Key		
(One key) Available to authorized dealers only on faxed orders. Will open LKF23C, LKF23CE4, LKF24, LKF25EL, and LKF25E4 locks numbered 101E-225E.	**AMKF22** S	**$ 15**

HOW TO ORDER:
NOTE: Numbers 101E-225E are available. Orders without numbers specified will be keyed at random.
SAMPLE ORDER:

Quantity	Model	Color
6	LKF23C	X121E
1	MKF22	X

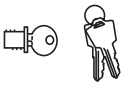

Brushed Chrome Removable Lock Core Kit*	**Key Numbers 101N-225N**	
Includes one core, two keys, one core removal tool, adapter and instructions	**ALKF23CN** S	**$ 18**

Master Key*		
(One key) Available to authorized dealers only on faxed orders.Will open LKF23CN locks numbered 101N-225N.	**AMF22** S	**$ 15**

S *Shippable by small-package carrier.*

SIN 711-1, 711-3

EASY LOCK PROGRAM

The Allsteel Easy Lock Program simplifies the lock-core ordering process when multiple cores are being specified. The Easy Lock cores can be used with Allsteel storage that currently uses the **ALKF23C** cores (all storage except Receding Door Overheads).

To ensure ease of ordering in different situations the Easy Lock cores can be specified in three different ways — Random, Specified or Sequential.

Random Keying

The Random Keying option is provided for instances where there are multiple orders or phases to a project and the offices need to be keyed alike but the key numbering is not required. With the random keying option key numbers are not specified, however, the core kits will be in sequential order from a random starting point.

Example: *There are 15 offices which each have 5 black locks that need to be keyed alike, but the actual key numbers are not important.*

This order would look like: **LKFE5BLK.X.15**

This specifies that 15 5-core kits are needed in black with random key numbers.

Specified Keying

The Specified Keying option is provided for the instances where there is a specific key number desired for all of the cores ordered.

Example: *There are 10 offices which each have 2 silver locks that need to be keyed-alike with key number 202.*

This order would look like: **LKFE2SLV.X202.10**

This specifies that 10 2-core kits are needed in silver with key number 202.

Sequential Keying

Allsteel Sequential Keying option is provided for the instances when there are multiple orders or phases to a project and it is imperative that key numbers are not duplicated.

Example: *A multiple phase project has 60 total offices — 40 offices in Phase I, and 20 offices in Phase II. The project manager has expressed a need to have keyed-alike offices but doesn't want any of the offices to use the same key numbers.*

The first 40 offices have 4 silver locks each that need to be keyed-alike.

This order would look like: **LKFE4SLV.SEQ/101.40**

This specifies that 40 4-core kits are needed in silver and the starting number is 101.

The second set of 20 offices only have 3 silver locks each that need to be keyed-alike; and it is important which key number starts off the sequence to ensure that no key number is duplicated. It is known that the first key range was key numbers 101-140.

The second order would look like: **LKFE3SLV.SEQ/141.20**

This specifies that 20 3-core kits are needed in silver and key sequence has to start at key number 141.

HOW TO ORDER:

Numbers 101-225 are available. Orders without key numbers specified will be keyed at random.

SAMPLE ORDER FOR EXAMPLES GIVEN:

Model	Key Type	Quantity
LKFE5BLK.	X.	15
LKFE2SLV.	X202.	10
LKFE4SLV.	SEQ/101.	40
LKFE3SLV.	SEQ/141.	20

NOTE: Quantity required is last number in model.option string.

Description	Model / Color	List Price
Easy Lock Lock-Core		
Lock Core Kit — 1 core, 2 keys	**LKFE1** ___	$ 19
Lock Core Kit — 2 cores, 2 keys	**LKFE2** ___	$ 38
Lock Core Kit — 3 cores, 2 keys	**LKFE3** ___	$ 57
Lock Core Kit — 4 cores, 2 keys	**LKFE4** ___	$ 76
Lock Core Kit — 5 cores, 2 keys	**LKFE5** ___	$ 95
Lock Core Kit — 6 cores, 2 keys	**LKFE6** ___	$ 114
Lock Core Kit — 7 cores, 2 keys	**LKFE7** ___	$ 133
Lock Core Kit — 8 cores, 2 keys	**LKFE8** ___	$ 152

Add color suffix to model: **SLV** Silver, **BLK** Black, **MTS** Matte Silver

Note: One core removal key minimum per order. One additional core removal key per 25 lock-cores will be shipped.

Master Key		
(One key) Available to authorized dealers only on faxed orders.	**AMKF22**	$ 15

How to specify using Easy Lock Program:

Step 1 — Count the number of lock cores and color required in each workstation that need to be keyed alike.

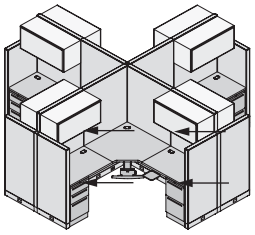

2 overheads with 1 lock-core each = 2
2 pedestals with 1 lock-core each = 2

Total silver lock-cores per station = 4

Step 2 — Count the total number of workstations needing 4 lock-cores.

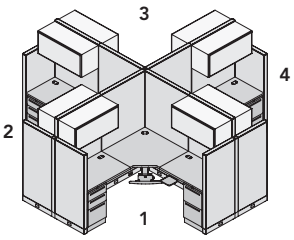

4 total workstations

Step 3 — Specify model number based on total number of lock-cores in a station and quantity of kits based on number of workstations.

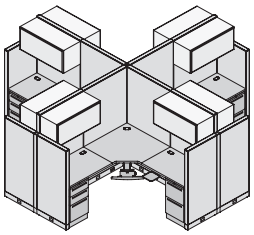

LKFE4SLV.X.4

Lock-Cores per station

Color of Core

Number of workstations

Appendix

16x20 Sample Yardage and Touch-Up Paint

Open Market / GSA SIN 711-1 (as noted)

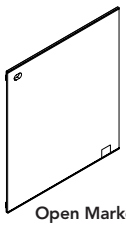

Open Market

Model	List Price by Grade 1	2	3	4	5	6
Seating Upholstery Sample — 16"H x 20"W						
SYSTG S	$ 110	$ 121	$ 129	$ 136	$ 149	N/A

Model	7	8	9	10	Leather 1	Leather 2	11	12
SYSTG S	$ 165	$ 176	$ 185	$ 193	$ 222	N/A	N/A	$ 214

• Samples have sewn edges, a grommet, and label.

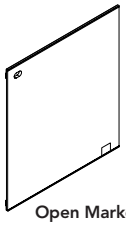

Open Market

Model	List Price by Grade A	B	C	D	E	F
Systems Fabric Sample — 16"H x 20"W						
SYSFS S	$ 88	$ 93	$ 98	$ 107	N/A	N/A

• Samples have sewn edges, a grommet, and label.

How to specify —

Select the Model Number from above.

S Y _ _ _ _ _ _ .

1st Option:

Fabric (applicable only to individual samples):

See inside back cover for fabrics.

_ _ _ _ _ _

Examples: **SYSFS.PNL06** **SYSTG.SWG904**

GSA SIN 711-1

Description	Model	Core List Price	Select List Price
Touch-Up Paint — Brush			
Bottle of Touch-Up Paint with Brush — 0.5 oz.	APTK S	$ 58	$ 63
Touch-Up Paint — Spray			
Spray Can of Touch-Up Paint — 12 oz.	ARSLCC S	$ 58	$ 63

Core Paint Colors	Code	Core Paint Colors	Code	Select Paint Colors	Code
Black	P27	Loft	P7B	Brilliant White	PQ8
Brownstone *(Brush Only)*	P7D	Muslin	P4J	Champagne Metallic	PR5
Bungalow	P7C	Parchment	P93	Gunmetal Metallic	PR3
Carob	P52	Pumice *(Spray Only)*	P92	Platinum Metallic	PR2
Flint	P02	Tan *(Spray Only)*	PRZ	Silver *(Brush Only)*	PR6
Fossil	P28	Warm Beige	P05	Tungsten	PR1

How to specify —

Select the Model Number from above.

A _ _ _ _ _ .

1st Option:

Paint Color:

C S

See available Touch-Up Paint colors listed above. Some colors are limited to brush or spray.

_ _ _ _ _ _

Examples: **APTK.P02** **ARSLCC.P02**

S *Shippable by small-package carrier.*

FSC Certified Wood at Allsteel

Allsteel has received FSC Chain of Custody certification from Scientific Certification Systems (SCS) and can now offer FSC certified products. Forest Stewardship Council (FSC) certification is intended to promote the sustainable harvesting of forests worldwide by setting requirements for the forest and everyone who handles the wood from forest to product. Certification provides a Chain of Customer number that we will pass on to customers who are pursuing LEED certification or who want to ensure that materials used to manufacture our wood products come from a well-managed forest. For more information, please contact Customer Support at 888-255-7833.

Load Capacity for Laminate Wood: Nitch, Horizontal Storage, Pedestals, Mobile Credenzas, and Towers

Product Description	Style	Depth	10"W	12"W	15⅝"W	24"W	30"W	36"W	42"W	48"W	54"W	60"W	72"W
7½"H Nitch	Open	15"D				36 lbs.	45 lbs.	54 lbs.	63 lbs.				
Horizontal	Open — Single Sided	15"D				81 lbs.	102 lbs.	122 lbs.					
	Open — Dual Sided	16"D				79 lbs.	99 lbs.	120 lbs.	140 lbs.	161 lbs.	181 lbs.	202 lbs.	243 lbs.
	Sliding Door — Single Sided	15"D				74 lbs.	94 lbs.	113 lbs.	133 lbs.	152 lbs.	171 lbs.	191 lbs.	
	Sliding Door — Dual Sided	16"D				68 lbs.	85 lbs.	103 lbs.	121 lbs.	138 lbs.	156 lbs.	174 lbs.	209 lbs.
Pedestal	Open Support	21"D	72 lbs.										
	Open Support w/Bin Left	27"D	79 lbs.										
	Open Support w/Bin Right	27"D	79 lbs.										
	Box Pull-Out Drawer	21"D			10 lbs.			124 lbs.					
		27"D			10 lbs.								
	File Pull-Out Drawer	21"D			35 lbs.								
		27"D			44 lbs.								
	Shelf Pull-Out Drawer	21"D			10 lbs.								
		27"D			10 lbs.								
Credenza	Mobile with Hinged Door Left				10 lbs.								
	Mobile with Hinged Door Right	15"D						124 lbs.					
Tower	42½"H Wardrobe Section	21"D		40 lbs.									
		27"D		53 lbs.									
	50"H Wardrobe Section	21"D		68 lbs.									
		27"D		90 lbs.									
	Tower Drawer	21"D		40 lbs.									
		27"D		53 lbs.									

Quantity of Locks for Laminate Wood: Horizontal Storage, Pedestals, Mobile Credenzas, and Towers

NOTE: Open units and shelves are non-locking and are therefore not included in the list below.

Product Description	Style	Depth	10"W	12"W	15⅝"W	24"W	30"W	36"W	42"W	48"W	54"W	60"W	72"W
Horizontal	Sliding Door — Single Sided	15"D				1 lock	1 lock	1 lock	1 lock	1 lock	1 lock	1 lock	
	Sliding Door — Dual Sided	16"D				2 locks	2 locks	2 locks	2 locks	2 locks	2 locks	2 locks	2 locks
Pedestal	Pull-Out Drawer Support	21"D			1 lock								
		27"D			1 lock								
Credenza	Mobile with Hinged Door Left	15"D						1 lock					
	Mobile with Hinged Door Right	15"D						1 lock					
Tower	42½"H Wardrobe Section	21"D		1 lock									
		27"D		1 lock									
	50"H Wardrobe Section	21"D		1 lock									
		27"D		1 lock									

Appendix

Further™ — Storage Dimensions

GSA Reference Page

Interior Dimensions for Nitch, Horizontal Storage, Pedestals, Credenzas, and Towers

Description		Height	Depth	Width
NITCH	24"W	5⅞"	12¾"	11⅝"
	30"W	5⅞"	14⅞"	14⅝"
	36"W	5⅞"	14⅞"	17⅝"
	42"W Side Cavities	5⅞"	14⅞"	13¾"
	42"W Center Cavity	5⅞"	14⅞"	13⅜"
HORIZONTAL STORAGE	24"W Open	13⅜"	14⅞"	23¾"
	30"W Open	13⅜"	14⅞"	29¾"
	36"W Open	13⅜"	14⅞"	35¾"
	24"W Slider	13⅜"	14⅛"	11½"
	30"W Slider	13⅜"	14⅛"	14½"
	36"W Slider	13⅜"	14⅛"	17½"
	42"W Slider	13⅜"	14⅛"	20½"
	48"W Slider	13⅜"	14⅛"	23½"
	54"W Slider	13⅜"	14⅛"	26½"
	60"W Slider	13⅜"	14⅛"	29½"
	24"W Shared Open	13⅜"	14⅞"	11½"
	30"W Shared Open	13⅜"	14⅞"	14½"
	36"W Shared Open	13⅜"	14⅞"	17½"
	42"W Shared Open	13⅜"	14⅞"	20½"
	48"W Shared Open	13⅜"	14⅞"	23½"
	54"W Shared Open	13⅜"	14⅞"	26½"
	60"W Shared Open	13⅜"	14⅞"	29½"
	66"W Shared Open	13⅜"	14⅞"	32½"
	72"W Shared Open	13⅜"	14⅞"	35½"
	24"W Shared Slider	13⅜"	12⅞"	11½"
	30"W Shared Slider	13⅜"	12⅞"	14½"
	36"W Shared Slider	13⅜"	12⅞"	17½"
	42"W Shared Slider	13⅜"	12⅞"	20½"
	48"W Shared Slider	13⅜"	12⅞"	23½"
	54"W Shared Slider	13⅜"	12⅞"	26½"
	60"W Shared Slider	13⅜"	12⅞"	29½"
	66"W Shared Slider	13⅜"	12⅞"	32½"
	72"W Shared Slider	13⅜"	12⅞"	35½"
PEDESTALS	Open — Bottom Shelf	12⅜"	19¾"	8⅜"
	Open — Top Shelf	12⅜"	20⅛"	8⅜"
	Side Access — Bottom Shelf	12⅜"	12⅞"	8⅜"
	Side Access — Top Shelf	12⅜"	12½"	8⅜"
	Side Access — Back Area	26⅛"	12¾"	9⅛"
	Pull-Out Drawer — Shelf	4"	12⅜"	14⅛
	Pull-Out Drawer — Box	2¾"	14½"	12⅛"
	21"D Pull-Out Drawer — File	9⅛"	14½"	12⅛"
	27"D Pull-Out Drawer — File	9⅛"	19"	12⅛"
CREDENZAS	Bottom Shelf	10¼"	14⅜"	22⅜"
	Top Shelf	4¾"	13⅝"	22⅜"
	Cubby	15½"	14⅜"	11¼"

Interior Dimensions for Nitch, Horizontal Storage, Pedestals, Credenzas, and Towers

Description		Height	Depth	Width
42"H TOWERS	21"D SA Bottom Shelf	5½"	19⅜"	11⅛"
	21"D SA Top Shelf	5½"	19⅜"	10⅝"
	21"D Drawer Bottom	12⅜"	18⅜"	7⅞"
	21"D Drawer Back	19⅜"	5⅜"	7⅞"
	21"D Drawer Shelf	4¼"	5⅜"	7"
	27"D SA Bottom Shelf	5½"	25⅜"	11⅛"
	27"D SA Top Shelf	5½"	25⅜"	10⅝"
	27"D Drawer Bottom	12⅜"	24⅜"	7⅞"
	27"D Drawer Back	19⅜"	11⅜"	7⅞"
	27"D Drawer Shelf	4¼"	11⅜"	7"
50"H TOWERS	21"D SA Bottom Shelf	4⅛"	19⅜"	11⅛"
	21"D SA Top Shelf	14¼"	19⅜"	10⅝"
	21"D Drawer Bottom	12⅜"	18⅜"	7⅞"
	21"D Drawer Back	19⅜"	5⅜"	7⅞"
	21"D Drawer Shelf	4¼"	5⅜"	7"
	27"D SA Bottom Shelf	4⅛"	25⅜"	11⅛"
	27"D SA Top Shelf	14¼"	25⅜"	10⅝"
	27"D Drawer Bottom	12⅜"	24⅜"	7⅞"
	27"D Drawer Back	19⅜"	11⅜"	7⅞"
	27"D Drawer Shelf	4¼"	11⅜"	7"
	Tower File Hanger (Same for all Towers)	11¼"	12¾"	7⅛"

Cross Reference Index

by Model Number

Model	Page
A87P2D1C	83
A87P2U1C	83
A87P2U1D1C	83
A870302	83
A871018	59
A871018A	59
A871020	59
A871020A	59
A871024	59
A871024A	59
A871030	59
A871030A	59
A871036	59
A871036A	59
A871042	59
A871042A	59
A871048	59
A871048A	59
A871060	59
A871060A	59
A871072	59
A871072A	59
A871096	59
A871096A	59
A871124	59
A871124A	59
A871130	59
A871130A	59
A871136	59
A871136A	59
A871142	59
A871142A	59
A871148	59
A871148A	59
A871160	59
A871160A	59
A871172	59
A871172A	59
A871196	59
A871196A	59
A871224	59
A871224A	59
A871230	59
A871230A	59
A871236	59
A871236A	59
A871242	59
A871242A	59
A871248	59
A871248A	59
A871254	59
A871254A	59
A871260	59
A871260A	59
A871266	59
A871266A	59
A871278	59
A871278A	59
A871284	59
A871284A	59
A871290	59
A871290A	59
A871296	59
A871296A	59
A871912	54, 63
A871918	54, 63
A877006	54, 63
A877012	54, 63
A8710120	59
A8710120A	59
A8710144	59
A8710144A	59
A8711120	59
A8711120A	59
A8711144	59
A8711144A	59
A8712102	59
A8712102A	59
ACPU4	86
AKM1	86
ALKF23C	90
ALKF23CN	90
AMF22	90
AMKF22	90
APTK	92
ARSLCC	92
ATADF3	56
ATADF4	56
ATADJ5	56
ATADJ6	56
AW4GANG	37
K5CT1536SC	76
LKFE	91
LNKCL	89
LNKDA	89
LNKFS	89
LNKPM	89
LNKSA	89
SYSFS	92
SYSTG	92
T612FB	37
T624FB	37
T630FB	37
U2HPP	54
U2HPPEC	54
U3CBBE	37
U3CG12	34
U3CHB1	34
U3CHB2	34
U3CHB3	34
U3CHB4	34
U3CHBC	34
U3CHBG	34
U3HAE	62
U3HAI	62
U3HTPCF	62
U3THCS	34, 36
U3THFW	62
U5F15C22RL	30
U5F15C22RR	30
U5F15C28RL	30
U5F15C28RR	30
U5F15C34RL	30
U5F15C34RR	30
U5F15C40RL	30
U5F15C40RR	30
U5F15C46RL	30
U5F15C46RR	30
U5F15C52RL	30
U5F15C52RR	30
U5F15C58RL	30
U5F15C58RR	30
U5F15D19RL	31
U5F15D19RR	31
U5F15D25RL	31
U5F15D25RR	31
U5F15D31RL	31
U5F15D31RR	31
U5F15D37RL	31
U5F15D37RR	31
U5F15D43RL	31
U5F15D43RR	31
U5F15D49RL	31
U5F15D49RR	31
U5F15D55RL	31
U5F15D55RR	31
U5F15E15RL	32
U5F15E15RR	32
U5F15E21RL	32
U5F15E21RR	32
U5F15E27RL	32
U5F15E27RR	32
U5F15E33RL	32
U5F15E33RR	32
U5F15E39RL	32
U5F15E39RR	32
U5F15E45RL	32
U5F15E45RR	32
U5F15E51RL	32
U5F15E51RR	32
U5F18C22RL	30
U5F18C22RR	30
U5F18C28RL	30
U5F18C28RR	30
U5F18C34RL	30
U5F18C34RR	30
U5F18C40RL	30
U5F18C40RR	30
U5F18C46RL	30
U5F18C46RR	30
U5F18C52RL	30
U5F18C52RR	30
U5F18C58RL	30
U5F18C58RR	30
U5F18D19RL	31
U5F18D19RR	31
U5F18D25RL	31
U5F18D25RR	31
U5F18D31RL	31
U5F18D31RR	31
U5F18D37RL	31
U5F18D37RR	31
U5F18D43RL	31
U5F18D43RR	31
U5F18D49RL	31
U5F18D49RR	31
U5F18D55RL	31
U5F18D55RR	31
U5F18E15RL	32
U5F18E15RR	32
U5F18E21RL	32
U5F18E21RR	32
U5F18E27RL	32
U5F18E27RR	32
U5F18E33RL	32
U5F18E33RR	32
U5F18E39RL	32
U5F18E39RR	32
U5F18E45RL	32
U5F18E45RR	32
U5F18E51RL	32
U5F18E51RR	32
U5F21S2840TL	30
U5F21S2840TR	30
U5F21S3446TL	30
U5F21S3446TR	30
U5F21S3963TS	33
U5F21S4052TL	30
U5F21S4052TR	30
U5F21S4569TS	33
U5F21S4658TL	30
U5F21S4658TR	30
U5F21S5175TS	33
U5F21S5264TL	30
U5F21S5264TR	30
U5F21S5781TS	33
U5F21S5870TL	30
U5F21S5870TR	30
U5F21S6387TS	33
U5F21S6476TL	30
U5F21S6476TR	30
U5F21S6993TS	33
U5F21S7082TL	30
U5F21S7082TR	30
U5F21S7688TL	30
U5F21S7688TR	30
U5F21S8294TL	30
U5F21S8294TR	30
U5F24S2842TL	31
U5F24S2842TR	31
U5F24S3448TL	31
U5F24S3448TR	31
U5F24S3966TS	33
U5F24S4054TL	31
U5F24S4054TR	31
U5F24S4572TS	33
U5F24S4660TL	31
U5F24S4660TR	31
U5F24S5178TS	33
U5F24S5266TL	31
U5F24S5266TR	31
U5F24S5784TS	33
U5F24S5872TL	31
U5F24S5872TR	31
U5F24S6390TS	33
U5F24S6478TL	31
U5F24S6478TR	31
U5F24S6996TS	33
U5F24S7084TL	31
U5F24S7084TR	31
U5F24S7690TL	31
U5F24S7690TR	31
U5F27S2844TL	32
U5F27S2844TR	32
U5F27S3450TL	32
U5F27S3450TR	32
U5F27S3970TS	33
U5F27S4056TL	32
U5F27S4056TR	32
U5F27S4576TS	33
U5F27S4662TL	32
U5F27S4662TR	32
U5F27S5182TS	33
U5F27S5268TL	32
U5F27S5268TR	32
U5F27S5788TS	33
U5F27S5874TL	32
U5F27S5874TR	32
U5F27S6394TS	33
U5F27S6480TL	32
U5F27S6480TR	32
U5F27S7086TL	32
U5F27S7086TR	32
U5F27S7692TL	32
U5F27S7692TR	32
U5F2130S	29
U5F2136S	29
U5F2142S	29
U5F214646C	33
U5F2148S	29
U5F215252C	33
U5F2154S	29
U5F2160S	29
U5F2166S	29
U5F2172S	29
U5F2178S	29
U5F2184S	29
U5F2190S	29
U5F2196S	29
U5F2430S	29
U5F2436S	29
U5F2442S	29
U5F244646C	33
U5F2448S	29
U5F245252C	33
U5F2454S	29
U5F2460S	29
U5F2466S	29
U5F2472S	29
U5F2478S	29
U5F2484S	29
U5F2490S	29
U5F2496S	29
U5F2730S	29
U5F2736S	29
U5F2742S	29
U5F274646C	33
U5F2748S	29
U5F275252C	33
U5F2754S	29
U5F2760S	29
U5F2766S	29
U5F2772S	29
U5F2778S	29
U5F2784S	29
U5F2790S	29
U5F2796S	29
U6B06CN	35
U6B06F	36
U6B06M	36
U6B09CN	35
U6B09F	36
U6B09M	36
U6B12CN	35
U6B12F	36
U6B12M	36
U6B12MGF	36
U6B18F	36
U6B18M	36
U6B18N	35
U6B21F	36
U6B21N	35
U6B24F	36
U6B24M	36
U6B24N	35
U6B30F	36
U6B30M	36
U6B30N	35
U6B36DL1	35
U6B36DR1	35
U6B36F	36
U6B36M	36
U6B36MCH	36
U6B36N	35
U6B42D	35
U6B42F	36
U6B42M	36
U6B42MCH	36
U6B42N	35
U6B48DL2	35
U6B48DR2	35
U6B48F	36
U6B48M	36
U6B48MCH	36
U6B48N	35
U6B54DL2	35
U6B54DR2	35
U6B54DS111	35
U6B54F	36
U6B54M	36
U6B54MCH	36
U6B54N	35
U6B60DL2	35
U6B60DR2	35
U6B60DS111	35
U6B60F	36
U6B60M	36
U6B60MCH	36
U6B60MGF	36
U6B60N	35
U6B66DL2C2	35
U6B66DR2C2	35
U6B66DS222	35
U6B66F	36
U6B66M	36
U6B66MCH	36
U6B66N	35
U6B72DL2C2	35
U6B72DR2C2	35
U6B72DS222	35
U6B72F	36
U6B72M	36
U6B72MCH	36
U6B72N	35
U6B78DL2C2	35
U6B78DR2C2	35
U6B78DS222	35
U6B78F	36
U6B78M	36
U6B78MCH	36

Cross Reference Index

by Model Number

Model	Page
U6B78N	35
U6B84DL2C2	35
U6B84DR2C2	35
U6B84DS222	35
U6B84F	36
U6B84M	36
U6B84MCH	36
U6B84N	35
U6B90DL4	35
U6B90DR4	35
U6B90DS222	35
U6B90F	36
U6B90M	36
U6B90MCH	36
U6B90N	35
U6B96DL4	35
U6B96DR4	35
U6B96DS222	35
U6B96F	36
U6B96M	36
U6B96MCH	36
U6B96N	35
U6BC1324F	66
U6BC1324G	68
U6BC1330F	66
U6BC1330G	68
U6BC1336F	66
U6BC1336G	68
U6BC1342F	66
U6BC1342G	68
U6BC1348F	66
U6BC1348G	68
U6BC1354F	66
U6BC1354G	68
U6BC1360F	66
U6BC1360G	68
U6BC1366G	68
U6BC1372G	68
U6BC1378G	68
U6BC1384G	68
U6BC1390G	68
U6BC1396G	68
U6BC2024F	66
U6BC2024G	68
U6BC2030F	66
U6BC2030G	68
U6BC2036F	66
U6BC2036G	68
U6BC2042F	66
U6BC2042G	68
U6BC2048F	66
U6BC2048G	68
U6BC2054F	66
U6BC2054G	68
U6BC2060F	66
U6BC2060G	68
U6BC2066G	68
U6BC2072G	68
U6BC2078G	68
U6BC2084G	68
U6BC2090G	68
U6BC2096G	68
U6BL1221ML	69
U6BL1221MR	69
U6BL1227ML	69
U6BL1227MR	69
U6BMTW	37
U6E2F	37
U6H2P	34, 62
U6H2PC3	62
U6H2S	34, 62
U6H2SCU1P4C	62
U6H2SCU1P4H	62
U6H2SHC	34
U6HB2L	34
U6HB3	62
U6HB3L	34
U6L2FG	37
U6S2F	37
U6T2FC	37
U6T2FG	37
U6TM18F	67
U6TM24F	67
U6TM30F	67
U6TM36F	67
U6TM42F	67
U6TM48F	67
U6TM54F	67
U6TM60F	67
U6TS1330F	67
U6TS1330G	68
U6TS1336F	67
U6TS1336G	68
U6TS1342F	67
U6TS1342G	68
U6TS1348F	67
U6TS1348G	68
U6TS1354F	67
U6TS1354G	68
U6TS1360F	67
U6TS1360G	68
U6TS2030F	67
U6TS2030G	68
U6TS2036F	67
U6TS2036G	68
U6TS2042F	67
U6TS2042G	68
U6TS2048F	67
U6TS2048G	68
U6TS2054F	67
U6TS2054G	68
U6TS2060F	67
U6TS2060G	68
U6TU1318F	69
U6TU1324F	69
U6TU1330F	69
U6TU1336F	69
U6TU1342F	69
U6TU1348F	69
U6TU1354F	69
U6TU1360F	69
U6WBTF	28, 37
U7H07S24P	74
U7H07S30P	74
U7H07S36P	74
U7H07S42P	74
U7H15D24PL	75
U7H15D24PR	75
U7H15D24SL	75
U7H15D24SR	75
U7H15D30PL	75
U7H15D30PR	75
U7H15D30SL	75
U7H15D30SR	75
U7H15D36PL	75
U7H15D36PR	75
U7H15D36SL	75
U7H15D36SR	75
U7H15D42PL	75
U7H15D42PR	75
U7H15D42SL	75
U7H15D42SR	75
U7H15D48PL	75
U7H15D48PR	75
U7H15D48SL	75
U7H15D48SR	75
U7H15D54PL	75
U7H15D54PR	75
U7H15D54SL	75
U7H15D54SR	75
U7H15D60PL	75
U7H15D60PR	75
U7H15D60SL	75
U7H15D60SR	75
U7H15D66PL	75
U7H15D66PR	75
U7H15D66SL	75
U7H15D66SR	75
U7H15D72PL	75
U7H15D72PR	75
U7H15D72SL	75
U7H15D72SR	75
U7H15S24P	74
U7H15S24S	74
U7H15S30P	74
U7H15S30S	74
U7H15S36P	74
U7H15S36S	74
U7H15S42S	74
U7H15S48S	74
U7H15S54S	74
U7H15S60S	74
U7HS24	74
U7HS30	74
U7HS36	74
U7HS42	74
U7HSB2	75
U7HSK1	74
U7HSK2	75
U7MC203615HL	76
U7MC203615HR	76
U7P1021P	76
U7P1027PBL	76
U7P1027PBR	76
U7P1521PD	76
U7P1527PD	76
U7T421221ADL	77
U7T421221ADR	77
U7T421227ADL	77
U7T421227ADR	77
U7T501221ADL	77
U7T501221ADR	77
U7T501227ADL	77
U7T501227ADR	77
U7WDA	83
U8BBDM	56
U8BBKCH	54
U8DSPSD	56
U8DSPSS	56
U8EBKCH4	54
U8HSK3H	63
U8HU1P4C	63
U8HU1P4H	63
U8IKCH	54
U8IKNY1	54
U8IKNY2	54
U8IKNY3	54
U8K36DE1	55
U8K42DE1	55
U8K48DE2	55
U8K54DE2	55
U8K54DS111	55
U8K60DE2	55
U8K60DS111	55
U8K66D222	55
U8K72D222	55
U8K78D222	55
U8K84D222	55
U8K90D222	55
U8K90DE4	55
U8K96D222	55
U8K96DE4	55
U9BH	83
U9BWMC	57, 83
U9TF	82
U9TM	82
U9TP	82
U9TS	82
U9WTC	82
U87JB	55
U87JH1	55
U87JH2	55
U87JH3	55
U87U327A	59
U87U501	56, 63
U87U502	56, 63
U87U503	56, 63
U87U504	56, 63
U87U506	56, 63
U87UH	55
U912WTR	82
U918WTR	82
U924BMS	83
U924BWHCM	57
U924BWLCM	57
U924WTR	82
U930BMS	83
U930BWHCM	57
U930BWLCM	57
U930WTR	82
U936BMS	83
U936BWHCM	57
U936BWLCM	57
U936WTR	82
U942BMS	83
U942BWB	57
U942BWHCM	57
U942BWLCM	57
U942WTR	82
U948BMS	83
U948BWHCM	57
U948BWLCM	57
U948WTR	82
U954BMS	83
U954BWB	57
U954BWHCM	57
U954BWLCM	57
U954WTR	82
U960BMS	83
U960BWHCM	57
U960BWLCM	57
U960WTR	82
U966BWB	57
U966BWHCM	57
U966BWLCM	57
U966WTR	82
U972BWHCM	57
U972BWLCM	57
U972WTR	82
U978BWHCM	57
U978BWLCM	57
U978WTR	82
U984WTR	82
U990WTR	82
U996WTR	82
USBEC2	35, 56, 63
USBEC2CH	35, 56, 63
USBEC12	35, 56, 63
USBEC12CH	35, 56, 63
WANDFS	89
WANDFSOC	89
Z5SC42	28
Z5SC48	28
Z5SC54	28
Z5SC60	28
Z5SC66	28
Z5SC72	28
Z5SC78	28
Z5SC84	28
Z6LB	77
ZW8LT	86
ZW82KIT	86
ZW810H	86
ZW810S	86
ZW810T	86
ZW820D	86
ZW820DH	86

Further™

Partnership Program

GSA Reference Page

SEATING UPHOLSTERY FOR SCREENS — RR CUT

GRADE 1 (Use Grade A Pricing)

PERENNIAL ***E*** **B, C, F, S, T**
(100% Recycled)

Bark	PNL04R
Bellflower	PNL13R
Daylily	PNL06R
Delphinium	PNL05R
Fennel	PNL07R
Fuchsia	PNL15R
Helenium	PNL17R
Iris	PNL01R
Ivy	PNL10R
Lilium	PNL14R
Phlox	PNL16R
Primrose	PNL12R
Sage	PNL03R
Zinnia	PNL09R

GRADE 2 (Use Grade B Pricing)

BURST F, S, T
(100% Recycled Polyester)
(Greenshield Stain-Resistant)

Auburn	BST05R
Cardinal	BST07R
Dove	BST06R
Indigo	BST02R
Leek	BST09R
Poolside	BST01R
Slate	BST03R
Zinnia	BST08R

GRADE 4 (Use Grade D Pricing)

Maharam **MEDIUM C, F, S, T**

Alloy	MDM003R
Bark	MDM006R
Blackberry	MDM052R
Cascade	MDM051R
Clover	MDM042R
Cosmic	MDM050R
Cream	MDM030R
Delight	MDM036R
Espresso	MDM007R
Flax	MDM004R
Furrow	MDM034R
Hazard	MDM035R
Hike	MDM047R
Honey	MDM033R
Iris	MDM037R
Laser	MDM014R
Lavender	MDM038R
Mallard	MDM041R
Marina	MDM022R
Nasturtium	MDM053R
Nautical	MDM039R
Pacific	MDM049R
Pecan	MDM008R
Persimmon	MDM013R
Pistachio	MDM029R
Pool	MDM040R
Port	MDM016R
Prospect	MDM032R
Pumpkin	MDM012R
Raven	MDM001R
Sculpture	MDM045R
Sift	MDM031 R
Smoke	MDM002R
Tangle	MDM048R
Thatched	MDM046R
Thistle	MDM043R
Washed	MDM044R
Wooded	MDM054R

GRADE 4 (Use Grade D Pricing)

Maharam **MESSENGER C, F, S, T**
(78% Recycled)

Ash	GRM977R
Aster	GRM967R
Azure	GRM941R
Balsa	GRM901R
Bayou	GRM908R
Beyond	GRM985R
Cactus	GRM945R
Capri	GRM961R
Cassis	GRM966R
Cherry	GRM969R
Chestnut	GRM952R
Chili	GRM983R
Cloud	GRM931R
Depth	GRM938R
Electric	GRM988R
Everglade	GRM987R
Fennel	GRM959R
Fireside	GRM982R
Fossil	GRM976R
Husk	GRM981R
Hydrangea	GRM950R
Ice	GRM946R
Lilac	GRM951R
Lumine	GRM954R
Mao	GRM925R
Neon	GRM948R
Nile	GRM940R
Onyx	GRM929R
Oyster	GRM979R
Pensive	GRM980R
Peridot	GRM960R
Poppy	GRM924R
Robust	GRM984R
Satchel	GRM975R
Satsuma	GRM971R
Shadow	GRM907R
Spice	GRM968R
Squall	GRM963R
Tangelo	GRM953R
Tobacco	GRM906R
Turf	GRM947R
Ultramarine	GRM962R
Vibrant	GRM970R
Voyage	GRM986R
Zinc	GRM910 R

GRADE 5 (Use Grade E Pricing)

WOOLY F

Bamboo	WOL008R
Black	WOL005R
Chaps	WOL014R
Charcoal Flannel	WOL004R
Framboise	WOL012R
Geranium	WOL011R
Grey Flannel	WOL003R
Lawn	WOL009R
Light Grey Mix	WOL002R
Marine	WOL007R
Natural Heather	WOL001R
Squash	WOL010R
Turquoise	WOL006R
Violet	WOL013R
Walnut	WOL015R

Multi-use fabrics are noted with the following designators: **B** – Tackboards, **C** – Concensys®, **F** – Further™, **O** – Optimize™, **S** – Stride®, **T** – Terrace®.

ALLSTEEL PARTNERSHIP PROGRAM

Allsteel understands that customers may at times want to specify panel fabrics and seating upholsteries outside of Allsteel's standard offering. **Allsteel's Partnership Program** consists of a select group of materials that have been tested and approved by Allsteel for use on Allsteel products. The current offering includes fabrics and upholsteries. These patterns are located in a separate section of the binders, upholsteries are listed above and are:

- Carded by the supplier, for memo samples call Maharam 1-800-645-3943; Momentum 1-800-366-6839; Edelman 1-800-886-8339; HBF 877-494-5727.
- **Not part of our standard offering and therefore subject to extended lead times** (please call Customer Support for current lead times).
- Not available on Allsteel's Express Solutions program.

The intent of the **Partnership Program** is to offer a wider variety of textiles to meet your needs. Because new materials will be introduced regularly, Allsteel reserves the right to change the offering at any time.

GRADE A

APPOINT PANEL
100% Polyester

Artichoke	APN911
Blackberry	APN932
Bronze	APN922
Carbon	APN928
Cherry	APN930
Copper	APN918
Dark Pewter	APN917
Espresso	APN923
Framboise	APN931
Hummus	APN914
Jet	APN927
Lawn	APN925
Mandarin	APN929
Morel	APN909
Nimbus	APN916
Platinum	APN924
Turmeric	APN910
Turquoise	APN926
Walnut	APN913

CELESTIAL D D
100% Polyester

Alumina	CS918
Linen	CS928
Obelisk	CS922
Stargaze	CS921
Woodsmoke	CS926
Zephr	CS914

ELEMENT
100% Polyester

Flint	GN965
Indigo	GN967
Latte	GN973
Millet	GN972
Parchment	GN953
Sea	GN974
Veil	GN913
Warm Beige	GN955
Wisp	GN975

ETCH
100% Polyester

Aquatint	ECH901
Crosshatch	ECH904
Engrave	ECH902
Intaglio	ECH906
Lithograph	ECH903
Mezzotint	ECH907
Woodcut	ECH905

EXCHANGE
100% Polyester

Florin	EXG908
Franc	EXG902
Krona	EXG907
Lira	EXG906
Riyal	EXG901
Rupee	EXG903
Tolar	EXG904

IMPRINT ◆ D
100% Polyester (57% Recycled)

Celestite	IMP911
Fossil	IMP910
Glacier	IMP902
Mineral	IMP905
Neolith	IMP907
Shell	IMP901

GRADE A – continued

LUCY
100% Recycled Polyester

Aspen	LC932
Cornsilk	LC930
Dusk	LC922
Fawn	LC933
Graphite	LC934
Mist	LC920
Neutra	LC924
Pewter	LC935
Snowdrop	LC928

REFLECTIONS
100% Recycled Polyester

Bamboo	REF926
Loggia	REF921
Mistral	REF928
Moonstone	REF923
Pewter	REF922
Stainless	REF924
Vanilla	REF925
Winter	REF927

REFUGE
64% Recycled Polyester
36% Polyester

Artesian	RFG996
Dune	RFG992
Frost †	RFG993
Hemp	RFG997
Mineral	RFG998
Sandbar	RFG995
Tidal	RFG994

TANGO
100% Polyester

Aficionado	TG994
Azul	TG993
Bongo	TG980
Dip	TG982
Palma	TG991
Pecan	TG985
Pistachio	TG986
Playa	TG933
Salsa	TG987
Sol	TG992
Tequila	TG990

TEMPEST
100% Recycled Polyester

Dragonfly	TP930
Frost	TP915
Full Steam	TP980
Ginger	TP925
Gold Rush	TP910
Sandstorm	TP950
Tumbleweed	TP970
Wind Chill	TP940

GRADE B

COAST †
100% Antimony-Free Polyester

Dune	COA903
Fjord	COA905
Headlands	COA910
Humus	COA907
Marsh	COA902
Shoal	COA901
Silt	COA906
Tide	COA908
Tombolo	COA909

GRADE B – continued

JET SET D
100% Recycled Polyester

Bali	JST901
Belize	JST904
Bogota	JST902
Dubai	JST910
Fiji	JST907
Marrakesh	JST909
Monaco	JST905
Riviera	JST908
Saigon	JST906
Zurich	JST903

MICA
100% Recycled Polyester

Anthracite	MCA911
Breeze	MCA918
Bronze	MCA913
Buff	MCA914
Cremini	MCA917
Crystal †	MCAWIT
Dew	MCA920
Dove	MCA912
Fresh	MCA916
Mineral	MCA915
Nectar	MCA919
Shale	MCA910

STAGGER D
60% Virgin Polyester,
40% Antimony-Free Polyester

Chalk	SGR901
Coast	SGR907
Gild	SGR904
Ivory	SGR902
Mask	SGR905
Shelter	SGR906
Shore	SGR903
Tender	SGR908

TASANEE
100% Polyester

Birch	TSN936
Cinder	TSN959
Citrus	TSN987
Cumin	TSN998
Feather	TSN924
Frost	TSN951
Pebble	TSN948
Silk	TSN912
Water	TSN963
Willow	TSN975

ALLSTEEL PARTNERSHIP PROGRAM

See page 98 for detailed explanation of Partnership Program.

GRADE C

PACT † ◆

Aloe**	PAC900
Azure	PAC911
Calla**	PAC922
Coastal	PAC933
Delft	PAC944
Dove**	PAC955
Dragon	PAC966
Eureka	PAC977
Fern	PAC988
Harour	PAC999
Lily	PAC910
Lime	PAC921
Midnight	PAC932
Nectar	PAC943
Patina	PAC954
Putty**	PAC965
Roast	PAC976
Roma	PAC987
Rubine	PAC998
Sketch	PAC909
Tanzanite	PAC920
Taupe**	PAC931
Toasty**	PAC942

**Colors not available on tackboards

D *Discontinued 7/3/2016*

D D *Discontinued 12/31/2016*

† Panel fabric is not available on Optimize or Concensys.

◆ Panel fabric is not available on Involve.

SPECIFICATION AND PRICE LIST 2015
prices effective March 29

RESOURCE CENTERS

Atlanta
Boston
Chicago
Dallas
New York
San Francisco
Santa Monica
Washington, DC

Allsteel®

Allsteel Inc.
Muscatine, Iowa 52761-5257
allsteeloffice.com

©2015 Allsteel Inc.
All registered trademarks and trademarks are the property of Allsteel Inc.

Form # A8329.B2 (1/16)