logiflex
OFFICE FURNITURE

RECEPTION

Price List

USA

Revision on July 21, 2015

Update Summary

The July 21, 2015 web revision of the Reception price list presents these principal modifications:

DATE	SECTION	MODIFICATION	PAGES
July 21, 2015	**TCPM**	TCPM went from $147 to $177	K-79

Previous updates:

DATE	SECTION	MODIFICATION	PAGES
January 5, 2015	**All the price list**	High pressure laminated products prices have been increased by 5% (MAL, MLL, REL, RECL)	-
August 1, 2014	**All the price list, exception of Inbox and M-Brace**	All products have been increased by 3%	A-1 to A18; D-1 to K-4
	Terms and conditions of sale	Limited lifetime warranty application	A-4
	Work desk	Price adjustments	I-1 to I-6

Table of Contents

A	**INTRODUCTION**	
	Product Map	A-2
	Conditions of Sale & Warranty	A-3
	Examples of Typicals	A-5
B	**M-BRACE**	
	Manufacturing Standard	B-2
	Straight Reception Counters	B-4
	Corner Reception Counters	B-6
C	**INBOX**	
	Manufacturing Standard	C-2
	L-Shape Reception Desk	C-4
	U-Shape Reception Desk	C-5
	Transaction Shelf	C-6
D	**SPHERIC**	
	Manufacturing Standard	D-2
	Quarter-Moon Reception Desk	D-3
	Inverted Quarter-Moon Reception Desk	D-6
	Straight Reception Desk	D-8
E	**MANHATTAN**	
	Manufacturing Standard	E-2
	Reception Desks	E-3
	Acrylic Panel	E-4
F	**3K**	
	Manufacturing Standard	F-2
	Reception Desks	F-3
	Returns	F-4
G	**C SERIES**	
	Manufacturing Standard	G-2
	Reception Desks	G-3
	Returns	G-5
H	**GALLERY**	
	Manufacturing Standard	H-2
	Reception Desks	H-3
	Returns	H-4
I	**WORK DESK**	
	Lateral Tables	I-2
	Returns	I-3
	Extended Corner Tables	I-4
J	**STORAGE FURNITURE**	
	Installed Pedestals	J-2
	Mobile Pedestals	J-3
	Lateral File Cabinets	J-4
	Multiple Units	J-5
	Cabinets	J-6
	Pigeonhole Units	J-7
K	**ACCESSORIES**	
	Lighting	K-2
	Trays, Drawers and Holders	K-3
	Hardware	K-4

Product Map

M-Brace

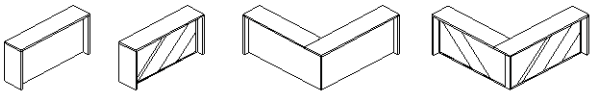

MS-M p. B-4 | MS-AD p. B-5 | MC-M p. B-6 | MC-AD p. B-7

Inbox

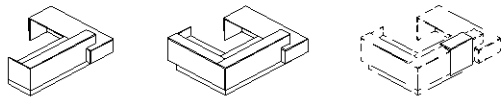

INBL p. C-4 | INBU p. C-5 | INBS p. C-6

Spheric

SPH F p. D-3 | SPH T / SPH P p. D-3 | SPH C p. D-4 | SPH A p. D-5 | SPH IF p. D-6

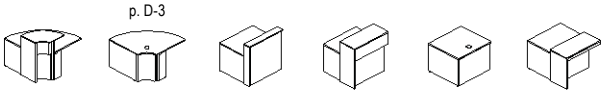

SPH IT / SPH IP p. D-6 | SPH IC p. D-7 | SPH SF p. D-8 | SPH ST / SPH SP p. D-8 | SPH SC p. D-9 | SPH SA p. D-10

Manhattan

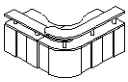

MAN p. E-3

3K

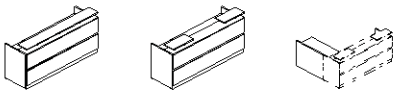

3K1 p. F-3 | 3K2 p. F-3 | RET 3K p. F-4

C

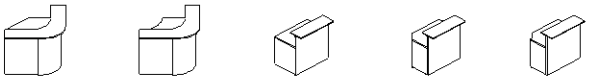

CXT p. G-3 | CXX p. G-3 | CTB p. G-4 | CTTB p. G-5 | CVTB p. G-7

Gallery

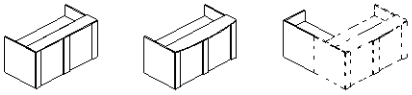

GA p. H-3 | GACX p. H-3 | GAR / GAL p. H-4

Work desks

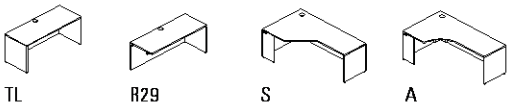

TL p. I-2 | R29 p. I-3 | S p. I-4 | A p. I-4

Installed pedestals

E p. J-2 | F p. J-2 | D p. J-2 | BCCL30 p. J-2 | CL30 p. J-2

Mobile pedestals

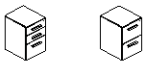

MOBE p. J-3 | MOBF p. J-3

Lateral file cabinets

CL2 p. J-4 | CL3 p. J-4 | CL4 p. J-4

Multiple units

UC1 p. J-5 | UC2 p. J-5 | UC3 p. J-5

Cabinets

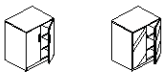

AR p. J-6 | ARPV p. J-6

Pigeonhole units

PG p. J-7 | PG30 p. J-7 | PGV p. J-8

Searching for more?

Reception collection integrates with all Logiflex 's collections! For more choices, visit our website to view other collections such as:

- Millenium, Manhattan and Level desks and storage furniture
- chairs, benches and lounge seating
- tables and wall units

Conditions of Sale & Warranty

Prices
The amounts listed in this document are suggested retail prices and may be changed without notice. Applicable taxes are not included. If you have an open and active account with Logiflex, merchandise will be invoiced at the prices prevailing at the time of shipment. A deposit may be requested if the opening of your account has not been completed or if your account has become inactive.

Terms of Payment
Net 30 days F.O.B. Sherbrooke, Quebec. The invoice will be assigned the shipping date and is payable 30 days from that date. Logiflex remains the owner of the merchandise until the invoice is paid in full.

Customized Products (Special Items)
Price requests for customized products or special items can be submitted via the “Online Services” section of our website, at www.logiflex.ca. Our quotation department will study your request and send you a quotation and a technical drawing for approval as soon as possible. Modifications to quotations or technical drawings can be requested the same way. The approved quotation(s) and technical drawing(s) can then be attached to your purchase order.

Orders
An official purchase order must be issued for all purchases. Your purchase order must contain the following information: your company letterhead, your reference number, the delivery address (with contact name and phone number), the complete product codes, furniture color(s), quantities, descriptions, retail prices and net prices, project registration number (if applicable) and your approved quotation and technical drawing (for special items). Please note that a quotation cannot serve as a purchase order.

Returns
All returns must first be approved by Logiflex. If the return is accepted, a Logiflex customer service representative will send you an official return authorization form in order to facilitate procedures between you, the carrier, and the Logiflex merchandise reception clerk. Additional costs for shipping or other expenses may be applied following any merchandise returns.

Modifications and/or Cancellations
You have 48 hours from the time we acknowledge receipt of your order to make any requests for corrections or modifications. You may cancel your order during this same 48-hour period. If you would like to modify or cancel your order after this 48-hour verification period, please check with a Logiflex customer service representative. Orders cannot be changed or cancelled if production has already begun or if Logiflex has already received the raw materials.

Liability
Logiflex’s liability ends once the carrier has delivered all items in good condition. A delivery receipt signed by the customer acknowledges that the shipment is complete and has been received in good condition.

Claims
Logiflex recommends inspecting the shipment before signing the carrier’s delivery receipt. You must notify Logiflex of any incomplete shipments or damaged furniture as soon as possible. Requests to replace damaged products can be made via the “Online Services” section of our website, at www.Logiflex.ca. Our after-sales service department will examine your request and help you correct the situation.

Changes
Logiflex reserves the right to make changes to the materials, accessories, components, specifications, design and to discontinue collections and/or models at any time and without prior notice.

Conditions of Sale & Warranty

Storage and/or Shipping Fees

If you would like to delay the delivery of an order already in production at Logiflex, weekly storage fees may be charged. The suggested retail prices in this list may include delivery; however, some conditions may apply. If your order is a minimum of $10,000 net, the order can be shipped directly to your customer. In this case, a 53-foot unloading dock must be available at the time of delivery. This information must first be validated with your Logiflex customer service representative. Direct shipping is subject to additional fees. Any delay experienced by Logiflex carriers during delivery may also result in additional charges.

Limited Lifetime Warranty

Logiflex warrants its products to the original purchaser for as long as the original purchaser owns the products. Logiflex guarantees that Reception products bought new from an authorized Logiflex distributor are free from defects in materials and workmanship for the lifetime of their use. This warranty applies to Reception products. Only if properly used, repair or replacement of any defect covered by the warranty will be at the discretion of Logiflex. Transportation and labor are not covered by this warranty. By accepting the product to its delivery, the buyer accepts its conditions.The warranty period shall be reduced proportionately if the products are used over a period exceeding the equivalent of a shift 40 hours/week. All replacement parts will be shipped to the original shipping address.

This warranty does not apply to defects or damages resulting from:
- Normal wear and tear occurring with the use of the product;
- Negligence, misuse, abuse or accident;
- Substitution, modification or use of components or materials that have not been authorized by Logiflex;
- Delivery by a freight carrier or handling/installation by a contractor other than Logiflex;
- Natural properties of materials;
- Exposure to sunlight or environments with extreme temperature/humidity conditions;
- Damage caused by a carrier in transit, or delivery/installation contractors.

This warranty does not include:
- Parts and materials supplied by the customer (COM);
- Special finishes applied to Logiflex products;
- The matching of colors, grains or textures of wood due to its natural properties;
- Products used for rental purposes;
- Non-standard Logiflex products;
- Logiflex product not installed or used in accordance with the Logiflex installation guidelines;
- Bulbs and ballasts.

Restrictions:
- Electrical components are guaranteed for 1 year from the date of delivery;
- Seat mechanisms, drawer slides and locks are guaranteed for 5 years from the date of delivery.

Linear Typical MB-TYP-A

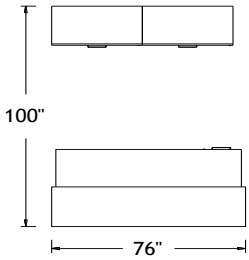

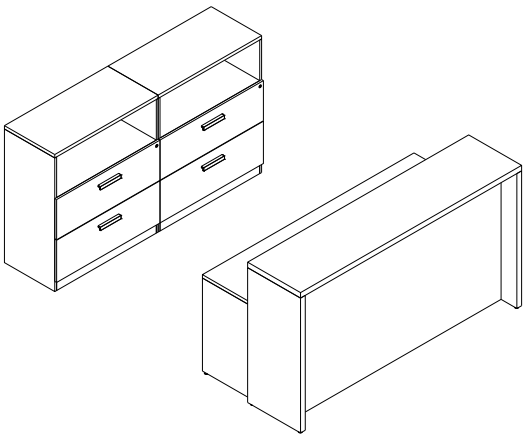

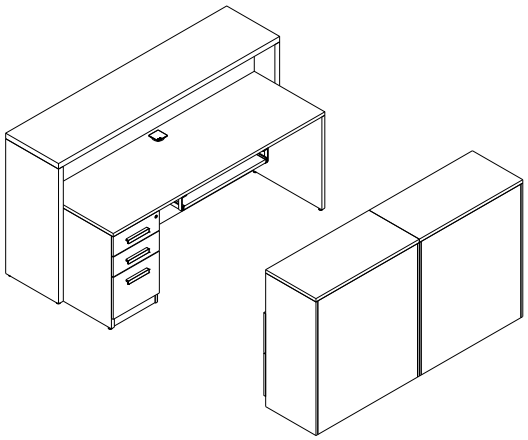

Items to Order

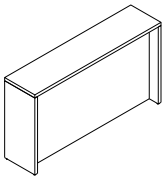

Reception Counter			
REC 18 76 41 MS-M	1 x	1012	**P. B-4**

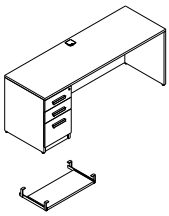

Lateral Table with Installed Pedestal			
RE [E] 24 72 TL LR	1 x	595	**P. I-2**
Installed Pedestal "E"	1 x	645	**P. J-2**
Keyboard Tray			
KBMOD 28	1 x	176	**P. K-3**

Multiple Unit			
RE 24 36 UC2	2 x	1235	**P. J-5**
Total		**4898**	

L-Shape Typical MB-TYP-B

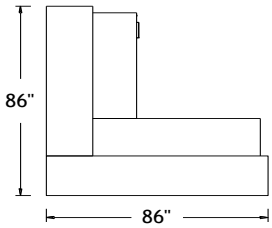

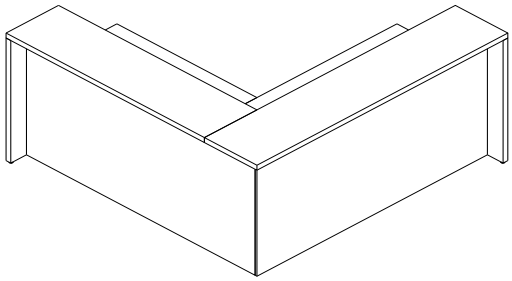

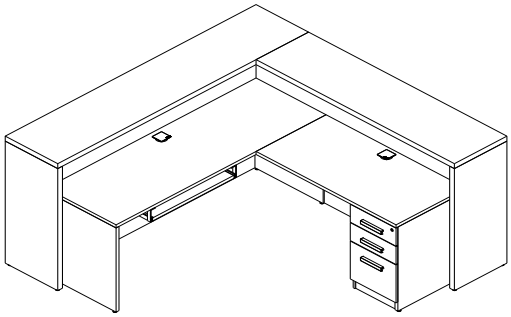

Items to Order

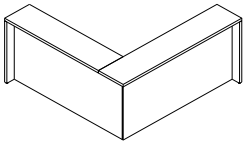

Reception Counter			
REC 18 86 86 18 41 MC-M R	1 x	1883	**P. B-6**

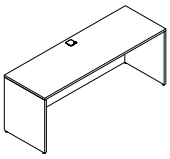

Lateral Table			
RE 24 72 TL LR	1 x	595	**P. I-2**

Keyboard Tray			
KBMOD 28	1 x	176	**P. K-3**

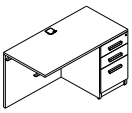

Return with Installed Pedestal			
RE 24 48 [E] R29	1 x	462	**P. I-3**
Installed Pedestal "E"	1 x	645	**P. J-2**
Total		**3761**	

L-Shape Typical MB-TYP-C

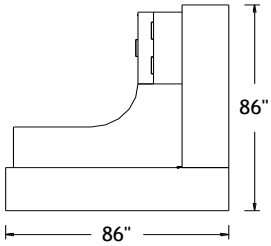

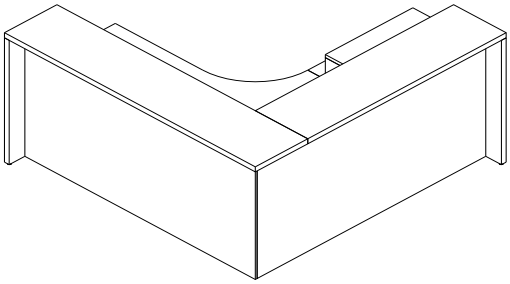

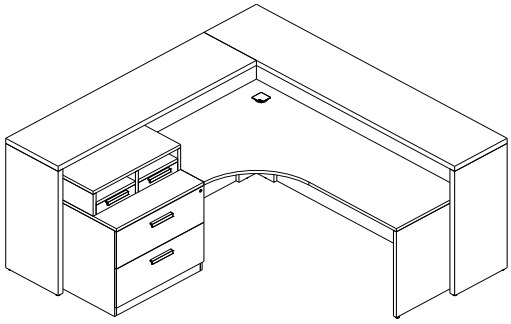

Items to Order

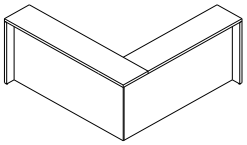

Reception Counter			
REC 18 86 86 18 41 MC-M L	1 x	1883	**P. B-6**

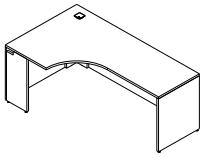

Extended Corner Table			
RE 24 42 72 24 R HR	1 x	1064	**P. I-4**

Lateral File Pedestal			
RE 24 30 CL2	1 x	837	**P. J-4**

Pigeonhole Unit with Drawers			
RE 16 PG30 [DR]	1 x	552	**P. J-7**
Drawer Option	1 x	437	
Total		**4773**	

L-Shape Typical MB-TYP-D

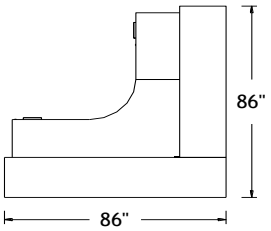

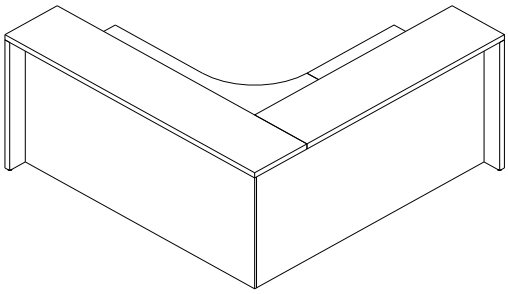

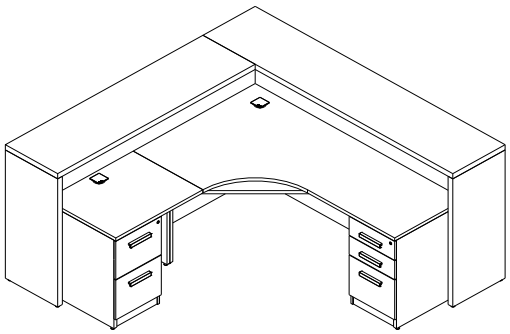

Items to Order

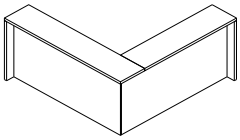

Reception Counter

REC 18 86 86 18 41 MC-M L	1 x	1883	**P. B-6**

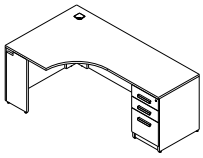

Extended Corner Table with Installed Pedestal

RE 24 42 72 24 [E] R HR	1 x	1064	**P. I-4**
Installed Pedestal "E"	1 x	645	**P. J-2**

Keyboard Tray

KBMOD 28	1 x	176	**P. K-3**

Lateral Table with Installed Pedestal

RE [F] 24 30 TL LH	1 x	433	**P. I-3**
	1 x	628	**P. J-2**

Total	**4829**

2 Levels Typical MB-TYP-E

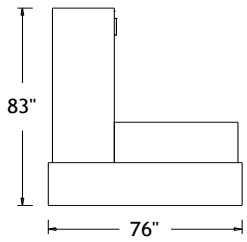

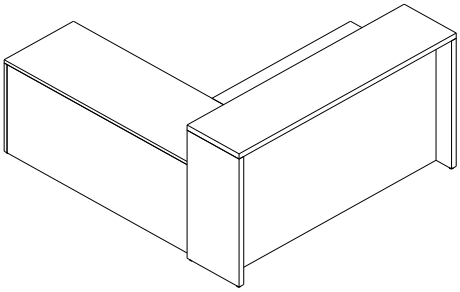

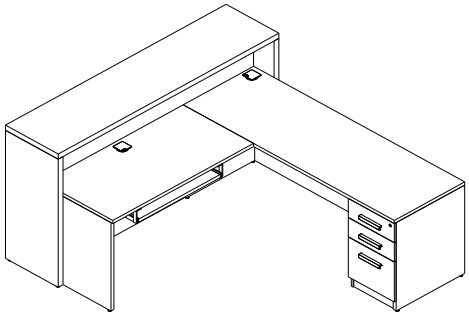

Items to Order

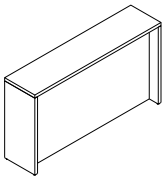

Reception Counter			
REC 18 76 41 MS-M	1 x	1012	**P. B-4**

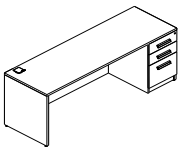

Lateral Table with Installed Pedestal			
RE 24 72 [E] TL LR FM GRL	1 x	595	**P. I-2**
Installed Pedestal "E"	1 x	645	**P. J-2**

Keyboard Tray			
KBMOD 28	1 x	176	**P. K-3**

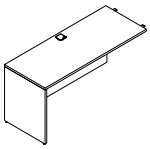

Return			
RE 24 48 L29 FM GRC	1 x	462	**P. I-3**
Total		**2890**	

U-Shape Typical INB-TYP-A

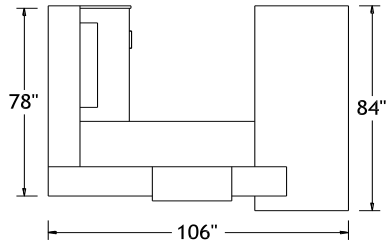

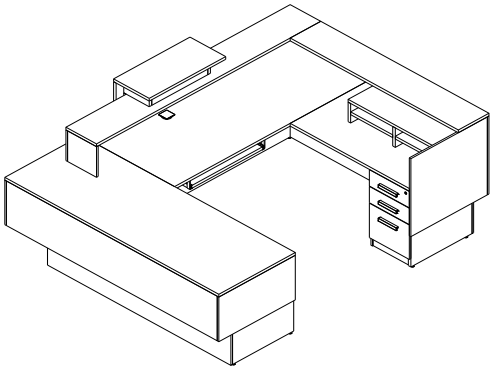

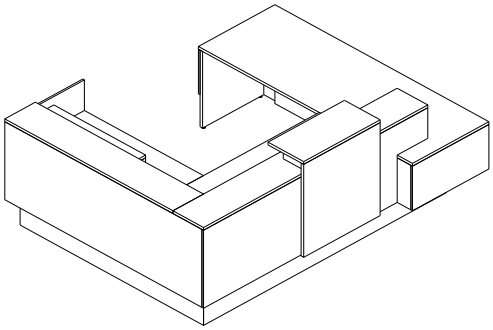

Items to Order

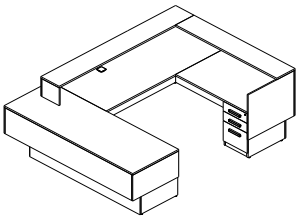

U-Shape Counter with Installed Pedestal			
RE 84 106 78 [E] INBU L	1 x	5445	**P. C-3**
Installed Pedestal "E"	1 x	645	**P. J-2**

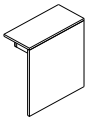

Transaction Shelf			
RE 30 INBS M	1 x	636	**P. C-6**

Keyboard Tray			
KBMOD 28	1 x	176	**P. K-3**

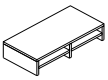

Pigeonhole Unit			
RE 16 PG36	1 x	578	**P. J-7**

Total		**7480**

L-Shape Typical INB-TYP-B

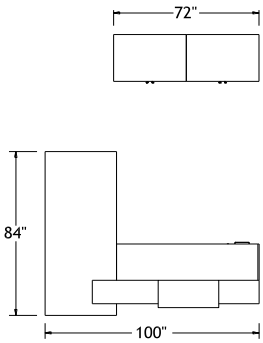

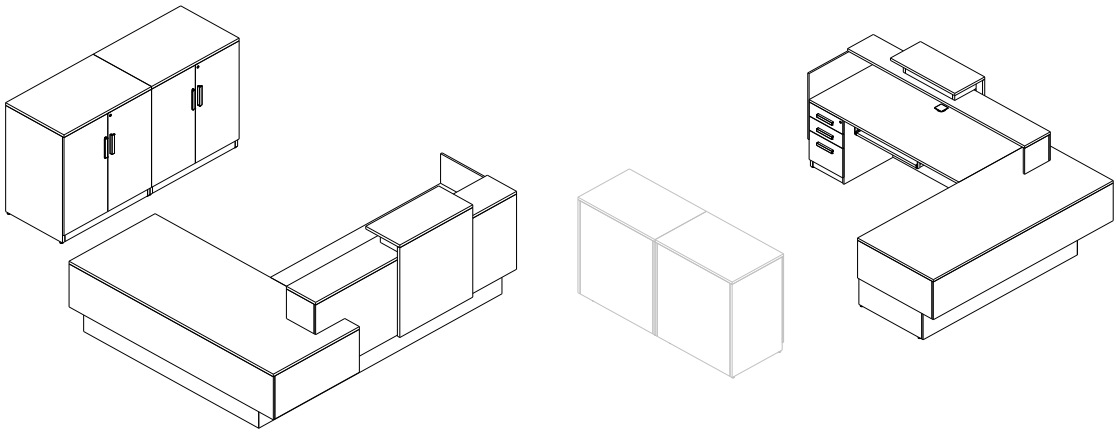

Items to Order

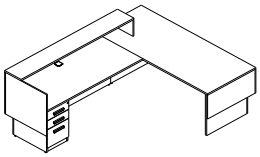

L-Shape Counter with Installed Pedestal			
RE [E] 84 100 INBL R	1 x	3477	**P. C-3**
Installed Pedestal "E"	1 x	645	**P. J-2**

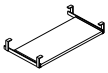

Keyboard Tray			
KBMOD 28	1 x	176	**P. K-3**

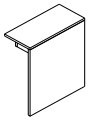

Transaction Shelf			
RE 30 INBS M	1 x	636	**P. C-6**

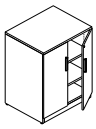

Cabinet			
RE 24 36 41 AR	2 x	935	**P. J-6**
Total		**6804**	

C-Shape Typical SP-TYPA

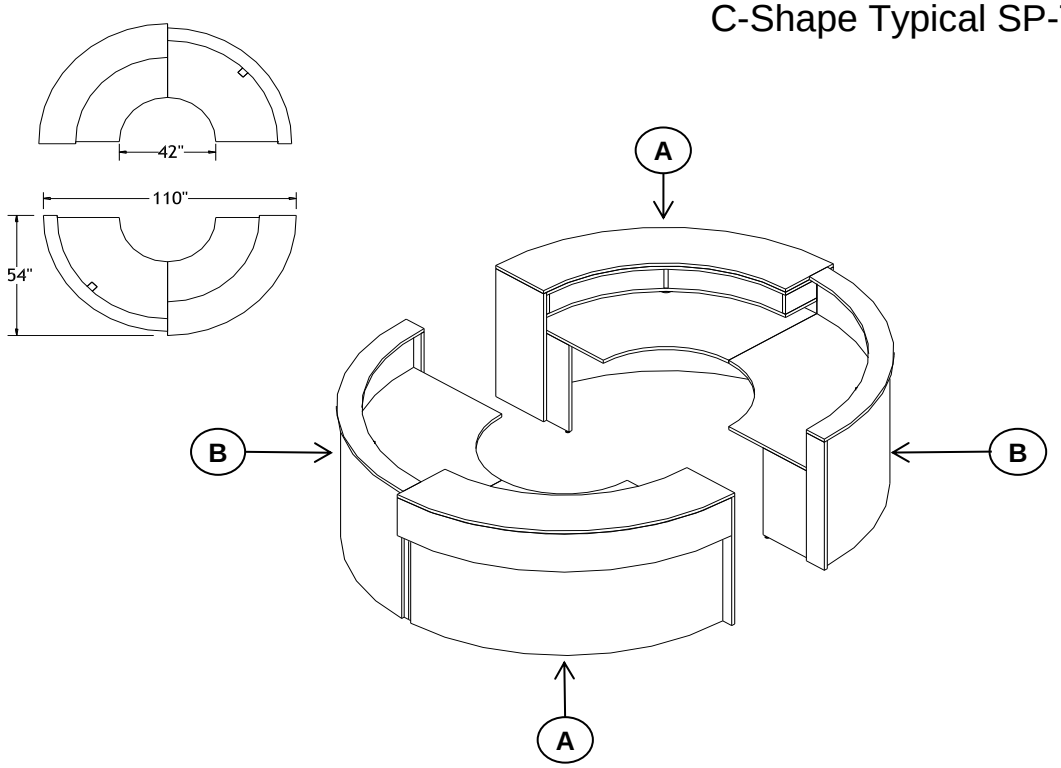

Items to Order

(A)	***Reception Desk | Pigeonhole Unit***			
	RE 30 54 SPH P L NGR	x 2	5113	**P. D-3**

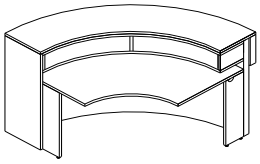

(B)	***Reception Desk | Finishing Shelf***			
	RE 30 54 SPH F R GRC	x 2	3239	**P. D-3**

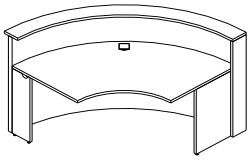

Total		**16704**

S-Shape Typical SP-TYPB

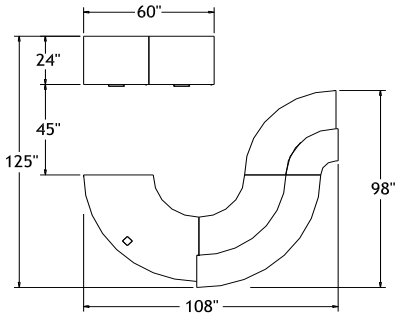

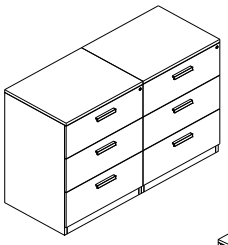

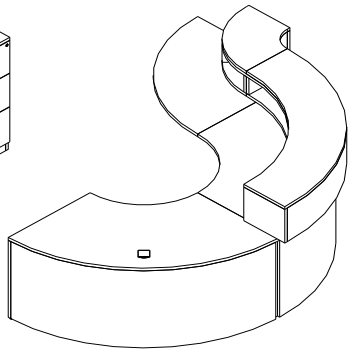

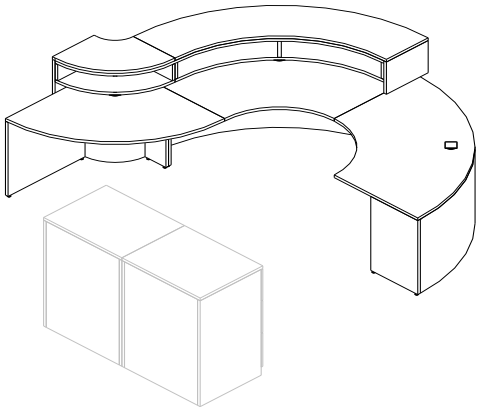

Items to Order

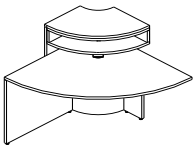

Inverted Reception Desk | Pigeonhole Unit			
RE 30 42 SPH IP L GRC	x 1	3971	**P. D-6**

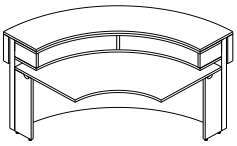

Reception Desk | Pigeonhole Unit			
RE 30 54 SPH P C	x 1	5113	**P. D-3**

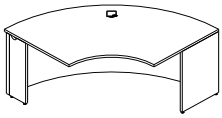

Consulting Desk			
RE 33 54 SPH C R GRC	x 1	2776	**P. D-4**

Lateral File Pedestal			
RE 24 30 CL3	x 2	1319	**P. J-5**

Total		**14498**

Accessible Typical SP-TYPC

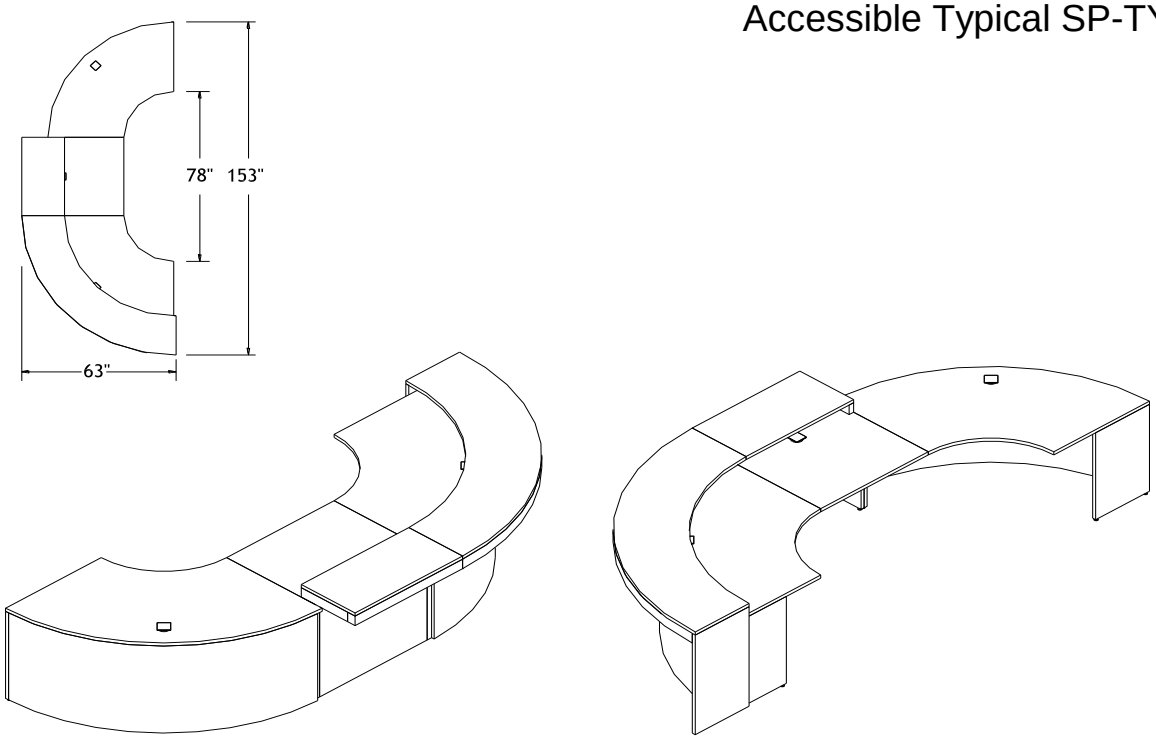

Items to Order

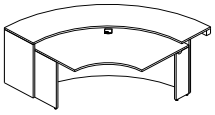	***Accessible Reception Desk*** *RE 30 54 SPH A L GRC*	x 1	4131	**P. D-5**
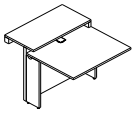	***Accessible Reception Desk*** *RE 30 36 SPH SA C GRC*	x 1	1190	**P. D-10**
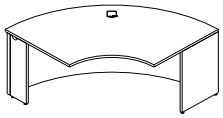	***Reception Consulting Desk*** RE 33 54 SPH C R GRC	x 1	2776	**P. D-4**
	Total		**8097**	

L-Shape Typical MAN-TYPA

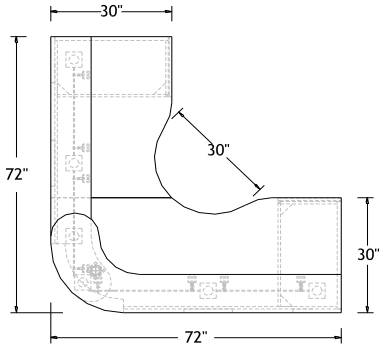

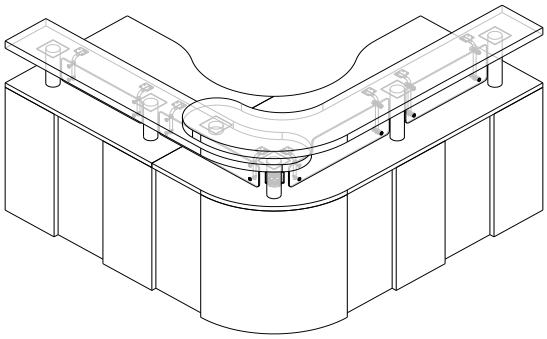

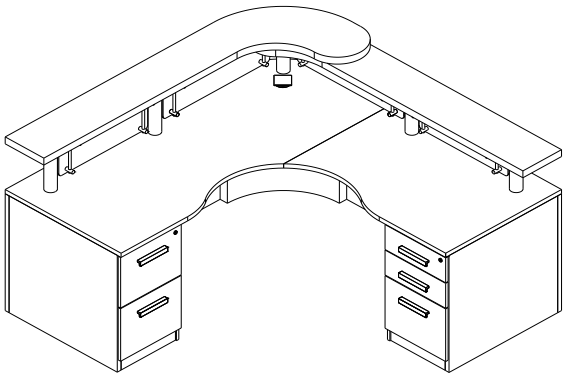

Items to Order

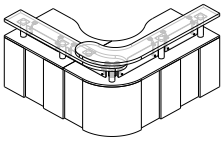

Manhattan Reception			
REC 72 72 MAN R	x 1	5127	**P. E-3**
Acrylic Panel Option [PL]	x 1	1641	**P. E-4**

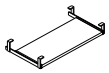

Keyboard Tray			
KBMOD 28	x 1	176	**P. K-3**

Installed Pedestal			
Installed Pedestal "E"	x 1	645	**P. J-2**

Installed Pedestal			
Installed Pedestal "F"	x 1	628	**P. J-2**

Total		**8217**	

L-Shape Typical 3K-TYPA

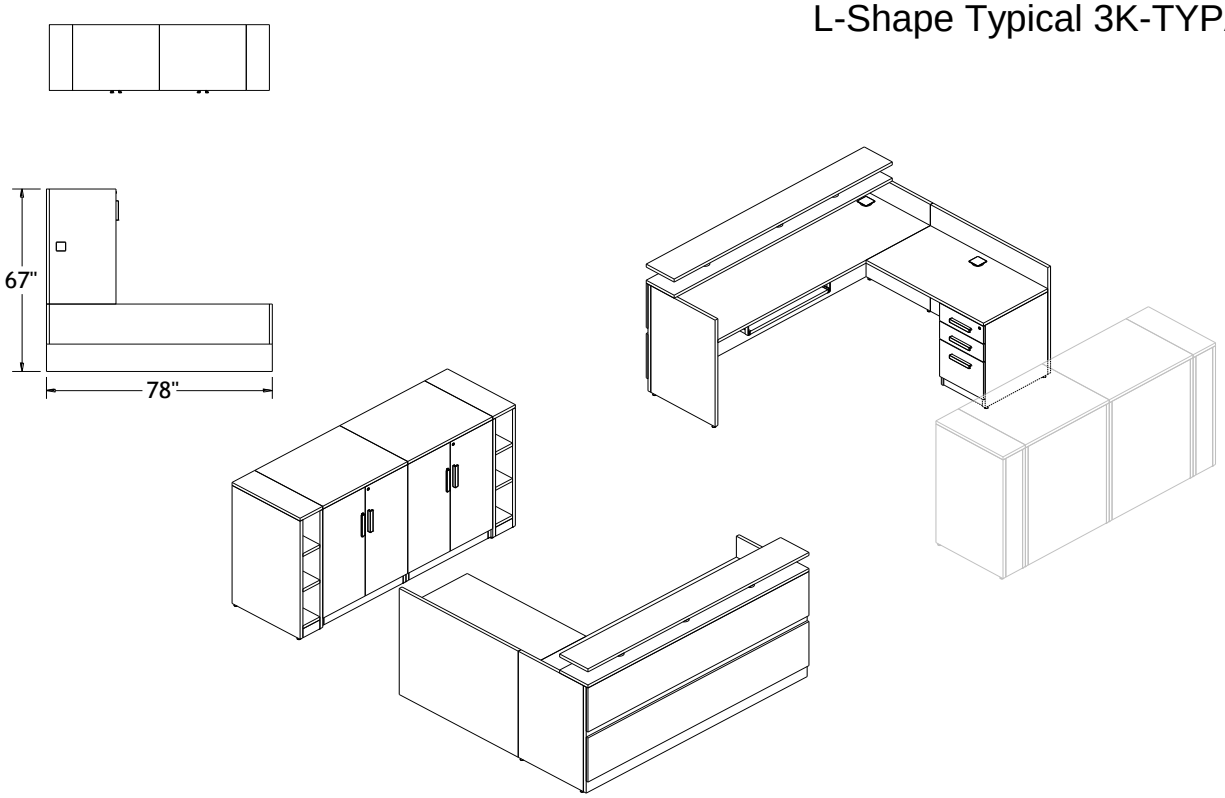

Items to Order

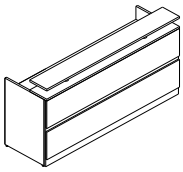	***3K1 Reception Desk***			
	RE 2478 3K1 GLR	1 x	2521	**P. F-3**
	3K Return			
	RE 24 42 [E] RET 3K R GRC	1 x	584	**P. F-4**
	Installed Pedestal "E"	1 x	645	**P. J-2**
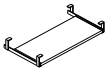	***Keyboard Tray***			
	KBMOD 28	1 x	176	**P. K-3**
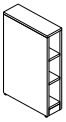	***Vertical Pigeonhole Unit***			
	RE 24 08 41 PGV	x 2	548	**P. J-8**
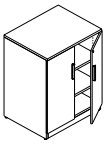	***Cabinet***			
	RE 24 30 41 AR	x 2	889	**P. J-6**
	Total		**6800**	

Typical GAL-TYPA

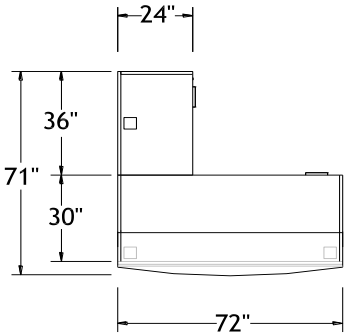

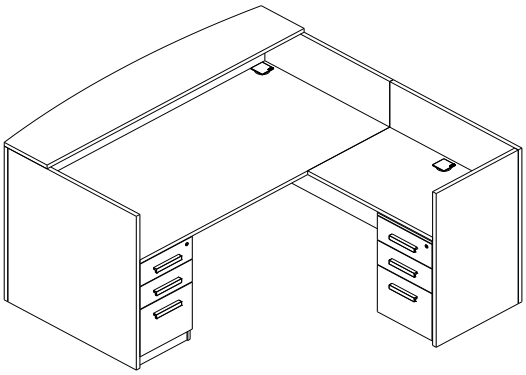

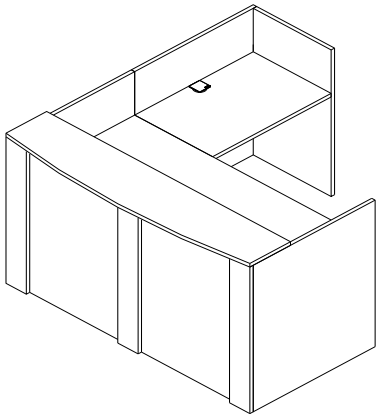

Items to Order

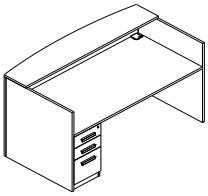

Reception Desk			
RE ML [E] 3072 TRECCX GLR CAPF	x 1	1214	**P. G-3**
Installed Pedestal "E"	x 1	645	**P. J-2**

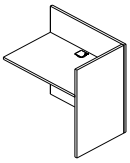

Return			
RE ML 2436 RREC GRC CAPF	x 1	561	**P. G-4**

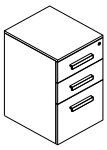

Mobile Pedestal			
RE 23 MOBE	x 1	713	**P. J-3**

Total		**3133**

Typical C-TYPA

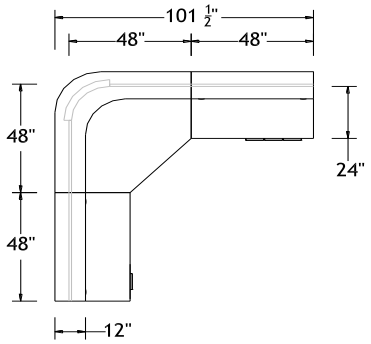

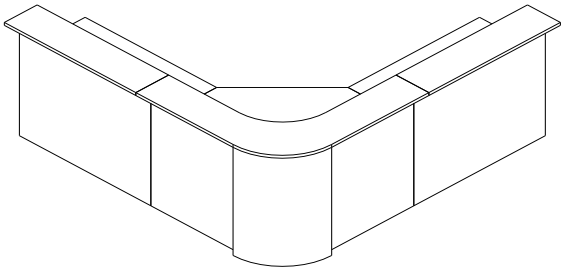

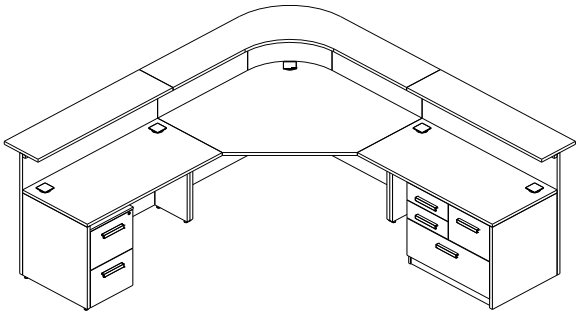

Items to Order

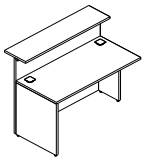

Return			
RE ML 24 48 TRECB LH GLR CAPF	x 1	781	**P. H-4**

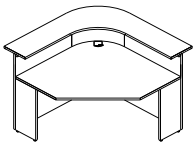

Corner Desk			
RE ML 24 48 24 RECXASY HH GRC CAPF	x 1	2752	**P. H-3**

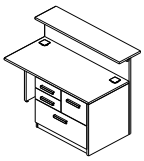

Return			
RE ML 24 48 [BCCL30] TRECB HR GLR CAPF	x 1	781	**P. H-4**
Installed Pedestal BCCL30	x 1	1039	**P. J-2**

Mobile Pedestal			
RE 23 MOBF	x 1	696	**P. J-3**

Total		**6049**

M-Brace

Manufacturing Standard

1. Top

Reception Counter tops and legs are 1-5/8" thick laminate and work desk tops and legs are 1" thick laminate.

2. Handle

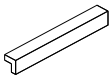

Handles are included with all storage furniture. The standard handle is H052CHR.

3. Grommet

Grommet is included with all work desks. The standard grommet is CAPF.

4. Lock

Locks are included with all storage furniture, except for the ones with aluminium doors. The lock included come in a satin nickel finish.

5. Wood Grain

The wood grain runs vertically all storage furniture fronts and is horizontal for all reception counter fronts.

6. Leveler

All furniture items sit on black plastic levelers.

7. Colors & Finishes

Colors have to be specify for all furniture items ordered. Consult the «How to Order» section of the product page for further details about the procedure. Consult the Logiflex Color Chart for the colors and finishes offered. The edge will match with the color and finish specified.

How to Build your M-Brace Reception Station?

With these simple and illustrated steps, design a Reception Station following your needs and your image!

1. Reception Counter (p.14 to 17)

Choose the form and the front finish of your reception counter.

Straight

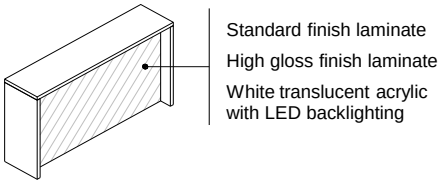

Corner Unit

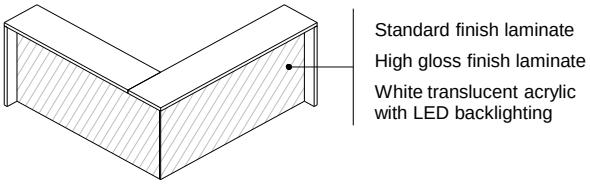

2. Work Desk (p.18 to 21)

Choose your work desks and the dimensions.

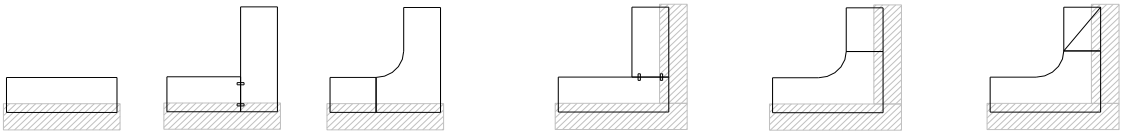

Lateral Table | Return & Lateral Table | Lateral Table & Extended Corner | Lateral Table & Return | Extended Corner & Lateral Table | Extended Corner & Storage

3. Storage & Accessories (p.22 to 30)

Choose the storage and accessories that meet your needs in order to complete your M-Brace Reception Station.

Examples:

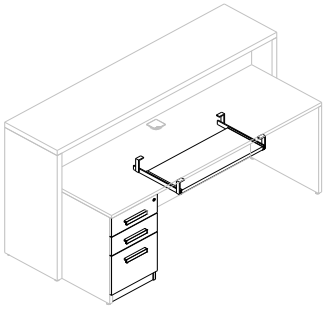

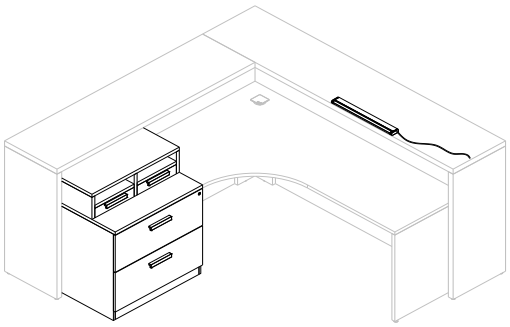

! Don't forget to consult the product page of each item for further details about the options, prices and product specification.

Reception Counter | M-Brace Straight

Manufacturing Standard: 1-5/8" thick laminate top and legs, 5-3/8" recessed laminate front (exterior) and 6" recessed modesty panel (interior).

MS-M

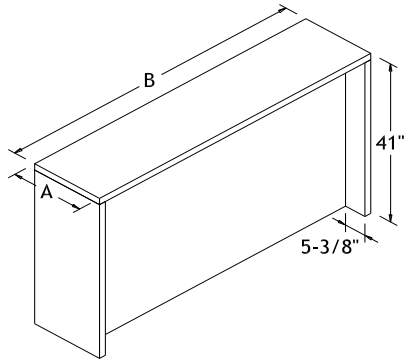

Dimensions	Front Finish		*Interior width*
A B* C	Std	HG	*for work desk*
18 64 41	937	1041	*60"*
18 76 41	1012	1126	*72"*
18 82 41	1045	1238	*78"*

**For specification reasons, the desk is 3/8" less than the dimension listed.*

Combination of colors? Specify:

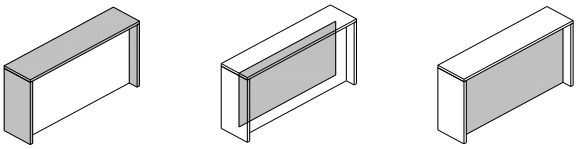

	Top & Legs	Base	Front*
Notes:	*Color available for 1-5/8" only.*	*1" structure and panel on user side.*	*Choice of 5/8" Std or HG color.*

**Fronts and front panels shown*

How to Order?

	A B C			Top & Legs	Base	Front
REC	_ _ _	**MS-M**	/	_ _	_ _	_ _
Series	Dimensions	Product		Colors		

See the Logiflex Color Chart.

Example **REC 18 82 41 MS-M / SW W W-H**

Reception Counter | M-Brace Straight

Manufacturing Standard: 1-5/8" thick laminate top and legs, 6" recessed translucent white acrylic front with laminate frame (interior and exterior), LED backlighting with 4-step tape dimmer fixed under the top on the right of the user side and removable front for access to the lighting.

MS-AD

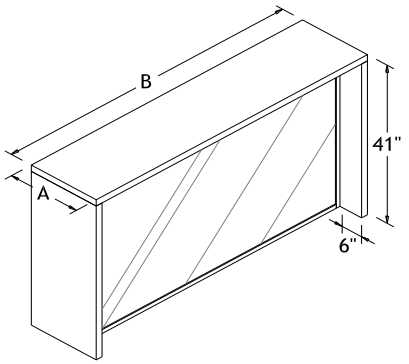

Dimensions A B* C	MS-AD1	MS-AD2	*Interior width for work desk*
18 64 41	1827	1958	*60"*
18 76 41	1911	2041	*72"*
18 82 41	1933	2084	*78"*

**For specification reasons, the desk is 3/8" less than the dimension listed.*

MS-AD1

LED on top only.

MS-AD2

LED on top and bottom.

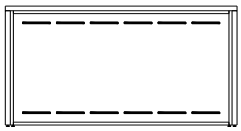

Combination of colors? Specify:

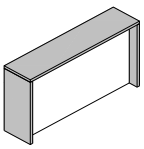

Top & Legs

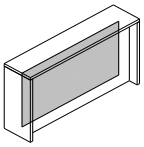

Base

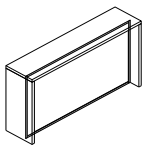

Front*

	Top & Legs	Base	Front*
Notes:	*Color available for 1-5/8" only.*	*1" panel on user side.*	*1" Laminate frame around acrylic panel.*

**Fronts and front panels shown*

How to Order?

		MS-AD1				
	A B C	MS-AD2		Top & Legs	Base	Front
REC	_ _ _	_ _	/	_ _	_ _	_ _
Series	Dimensions	Product			Colors	

See the Logiflex Color Chart.

Example **REC 18 82 41 MS-AD2 / SW W SW**

Reception Counter | M-Brace Corner

Manufacturing Standard: 1-5/8" thick laminate top and legs, 5-3/8" recessed laminate front (exterior) and 6" recessed modesty panel (interior)

MC-M

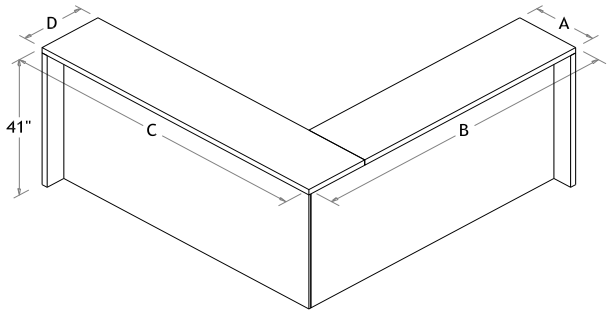

L

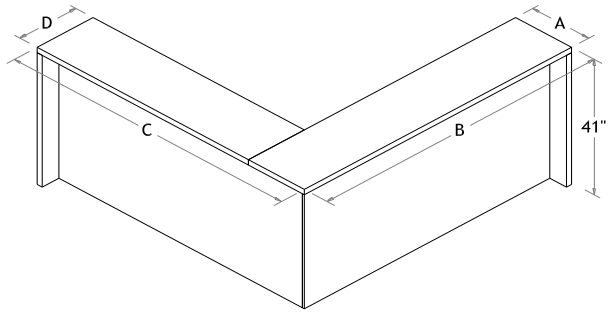

R

Dimensions A	B*	C*	D	E	Front Finish Std	HG	*Interior dimensions for work desk*
18	74	74	18	41	1767	2179	*60" x 60"*
18	80	80	18	41	1825	2274	*66" x 66"*
18	86	86	18	41	1883	2369	*72" x 72"*

**For specification reasons, the desk is 1/8" less than the dimension listed.*

Direction

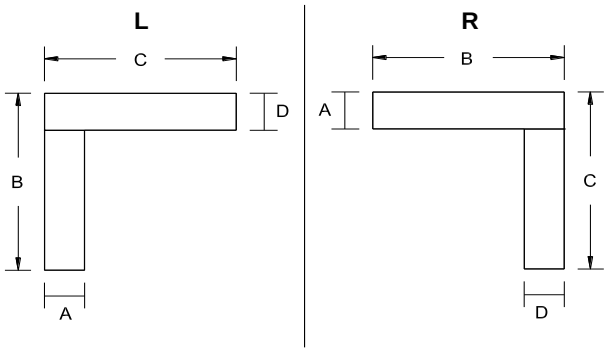

Combination of colors? Specify:

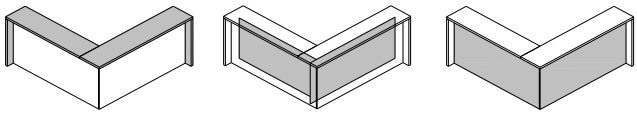

	Top & Legs	Base	Front*
Notes:	*Color available for 1-5/8" only.*	*1" structure and panels on user side.*	*Choice of 5/8" Std or HG color.*

**Fronts and front panels shown*

How to Order?

	A B C D E		R L		Top & Legs	Base	Front
REC	_ _ _ _	**MC-M**	_ _	/	_ _	_ _	_ _
Series	Dimensions	Product	Direction		Colors		

See the Logiflex Color Chart.

Example **REC 18 86 86 18 41 MC-M R / SW SW W-H**

Reception Counter | M-Brace Corner

Manufacturing Standard: 1-5/8" thick laminate top and legs, 6" recessed translucent white acrylic front with laminate frame (interior and exterior), LED backlighting with two 4-step tape dimmers fixed under the top on the user side on both left and right sides of the reception and removable fronts for access to the lighting.

MC-AD

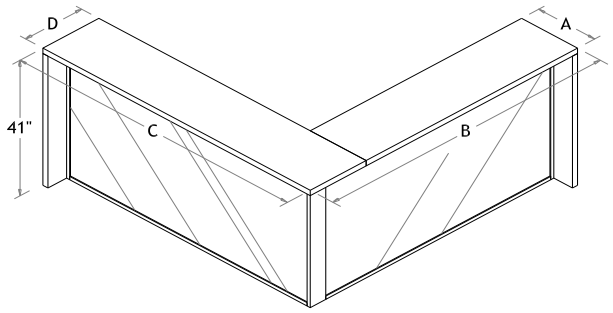

L

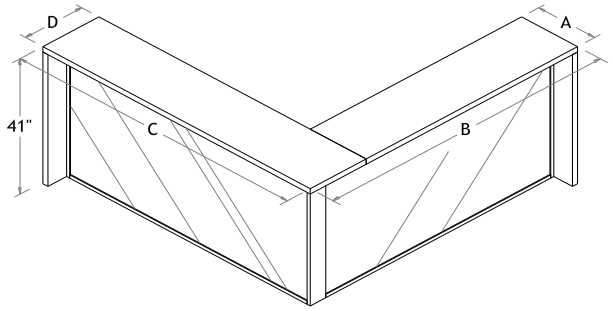

R

Dimensions

A	B*	C*	D	E	MC-AD1	MC-AD2	*Interior dimensions for work desk*
18	74	74	18	41	3311	3647	*60" x 60"*
18	80	80	18	41	3367	3723	*66" x 66"*
18	86	86	18	41	3424	3800	*72" x 72"*

**For specification reasons, the desk is 1/8" less than the dimension listed.*

Direction

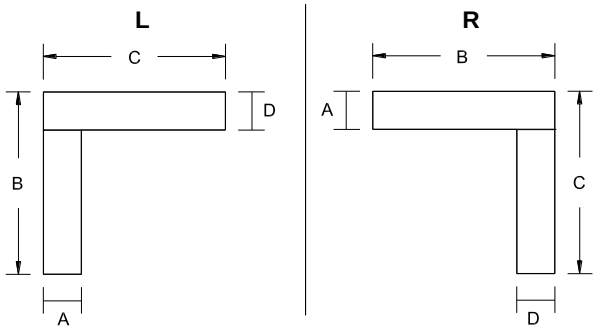

MC-AD1
LED on top only.

MC-AD2
LED on top and bottom.

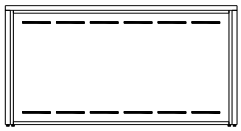

Combination of colors? Specify:

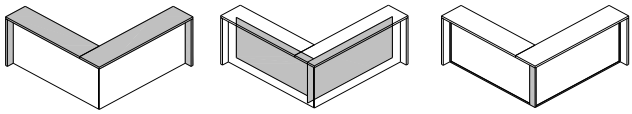

	Top & Legs	Base	Front*
Notes:	*Color available for 1-5/8" only.*	*1" panels on user side.*	*1" Laminate frame around acrylic panels.*

**Fronts and front panels shown*

How to Order?

		MC-AD1	R				
	A B C D E	MC-AD2	L		Top & Legs	Base	Front
REC	_ _ _ _ _	_ _	_ _	/	_ _	_ _	_ _
Series	Dimensions	Product	Direction			Colors	

See the Logiflex Color Chart.

Example **REC 18 86 86 18 41 MC-AD2 R / SW W SW**

Inbox

Inbox | Manufacturing Standard

1. Top

All tops are 1" laminate.

2. Front and Wood Grain

All fronts and front panels are 5/8" laminate and available in standard or high gloss finish. The wood grain runs horizontally.

3. Grommet

Grommets are included with all Inbox reception counters. The standard grommet is CAPF. Consult the "Accessories" section for more details on the grommet.

4. Leveler

All Inbox reception counters sit on black plastic levelers.

5. Colors

Colors have to be specified for all furniture items ordered. Consult the "How to Order" section of the product page for further details about the procedure. Consult the Logiflex Color Chart for the colors and finishes offered. Unless indicated otherwise in the order, the PVC edge will match with the color and finish specified.

6. Finish

A high gloss color can be specified for fronts and the front panels of Inbox reception counters. The high gloss finish will be applied to fronts and panels as illustrated below.

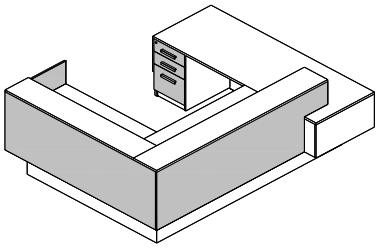

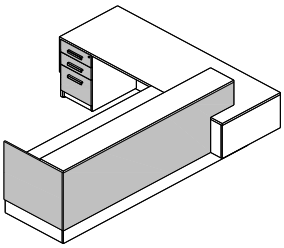

7. Dimensions

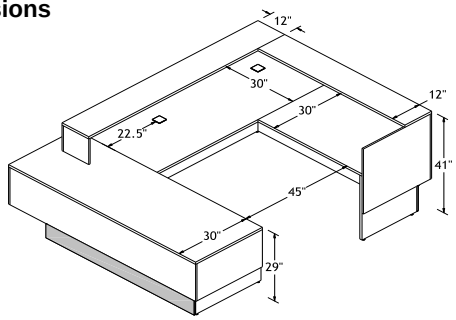

Transaction shelf: 12" wide
Work desk: 30" deep
Workspace: 45" wide

Inbox | How to Build your Reception Station

With these simple steps, design a reception station following your needs and your image!

1. What form would you like your station to have? (p. C-4 to C-5)

Choose the form (either L-shape or U-shape) and dimensions of your reception counter.

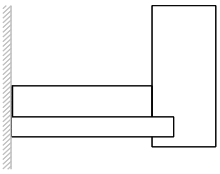

L-Shape Reception

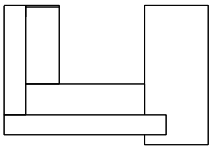

U-Shape Reception

2. Accent your reception station! (p. C-6)

The transaction shelf personalizes your reception station while also hiding your computer screen.

Example:

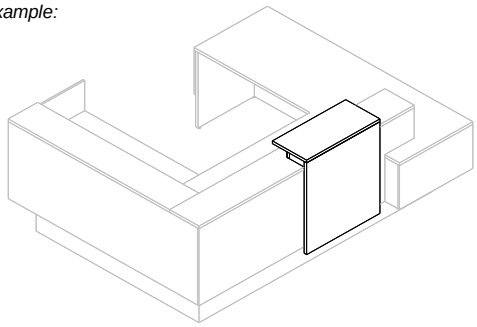

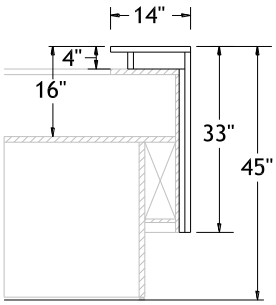

3. Would you like storage with that? (Section J)

Choose the storage and accessories that meet your needs in order to complete your Inbox reception station.

Example:

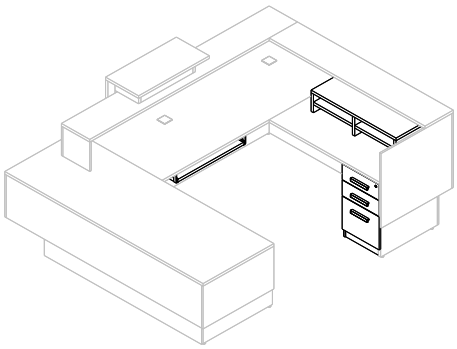

! Don't forget to consult the product page of each item for further details about the manufacturing standard, codes, options and prices.

Inbox | L-Shape Counter

Manufacturing Standard: 1" tops, metallic high pressure laminate kick plate, 2 CAPF grommets on the main work surface.

INBL

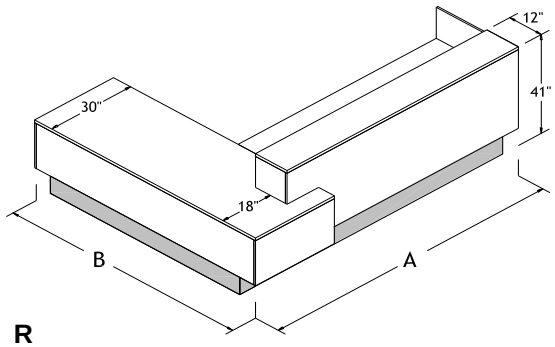

R

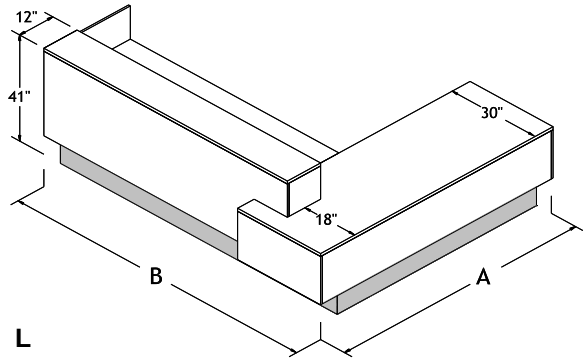

L

Dimensions (A B) L	(A B) R	Front STD	HG
72 82	82 72	3325	3821
72 88	88 72	3356	3867
72 94	94 72	3386	3913
72,100	100 72	3417	3959
78 82	82 78	3356	3860
78 88	88 78	3386	3906
78 94	94 78	3417	3952
78,100	100 78	3447	3998
84 82	82 84	3386	3899
84 88	88 84	3416	3945
84 94	94 84	3447	3991
84,100	100 84	3477	4037

Direction

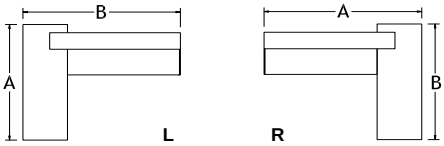

Grommet

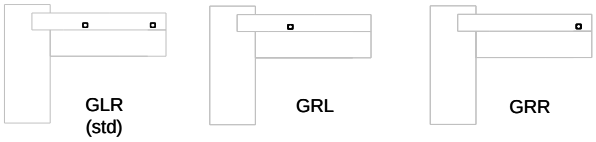

LED Option ($)

$449

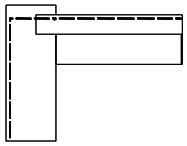

Cool white LED tape lighting the kick plate, with 4-step touch dimmer installed under the desk.

Combination of colors? Specify:

Manufacturing Standard: Metallic high pressure laminate kick plate

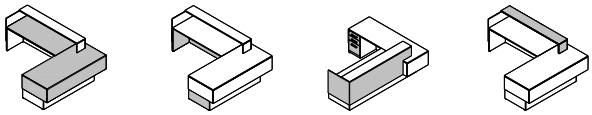

Top | Base | Front* | Shelf

Notes:

Choice of Std or HG color.

How to Order?

**Front and front panels shown*

						GLR (std)						
						GRL						
					L	GRR		**$449**				
	on left	A B	*on right*		R	NGR		[LED]	Top	Base	Front	Shelf
RE	[_ _]	_ _	[_ _]	**INBL**	_ _	_ _	/	[_ _]	_ _	_ _	_ _	_ _
Series	[Pedestal] *Option ($)*	Dimensions	[Pedestal] *Option ($)*	Product	Direction	Grommet					Colors	

See the Logiflex Color Chart.

Example RE 84 100 INBL L / LL W W W

Inbox | U-Shape Counter

Manufacturing Standard: 1" tops, metallic high pressure laminate kick plate, 3 CAPF grommets.

INBU

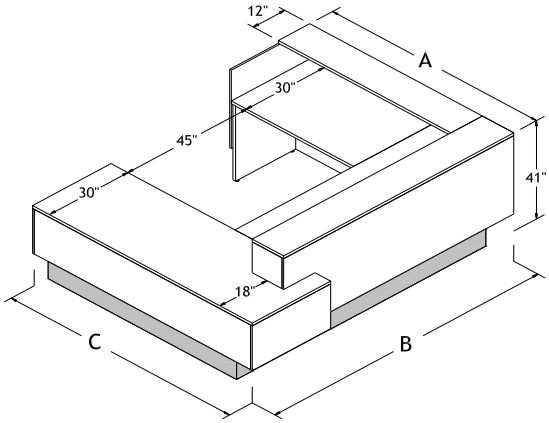

R

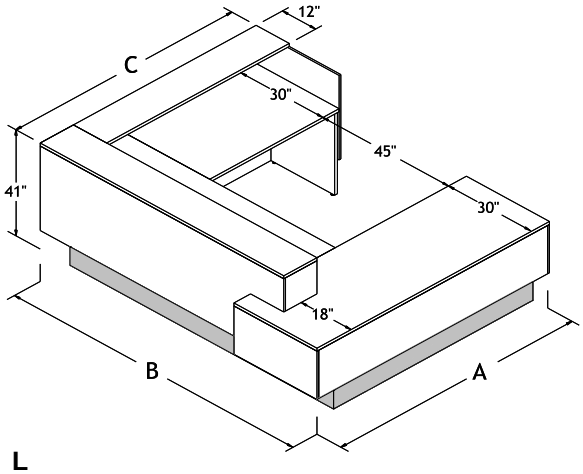

L

Dimensions (A B C) L	Dimensions (A B C) R	Front STD	Front HG
72 106 66	66 106 72	4550	5275
84 106 78	78 106 84	4672	5445

Direction

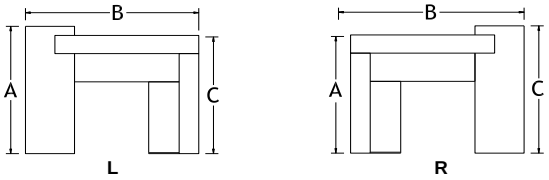

Grommet

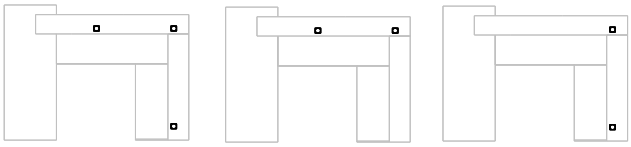

GR3 (std) GLC GCR

LED Option ($) $629

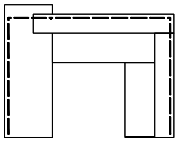

Cool white LED tape lighting the kick plate, with 4-step touch dimmer installed under the desk.

Combination of colors? Specify:

Manufacturing Standard: Metallic high pressure laminate kick plate

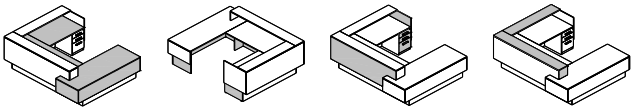

Top Base Front* Shelf

Notes:

Choice of Std or HG color.

How to Order?

**Front and front panels shown*

						GCR						
						GLC						
					R	GR3 (std)		**$629**				
	on left	A B C	*on right*		L	NGR		[LED]	Top	Base	Front	Shelf
RE	[_ _]	_ _	[_ _]	**INBU**	_ _	_ _	/	**[_ _]**	_ _	_ _	_ _	_ _
Series	[Pedestal] *Option ($)*	Dimensions	[Pedestal] *Option ($)*	Product	Direction	Grommet			Colors *See the Logiflex Color Chart.*			

Example RE 84 106 78 INBU L GR3 / LL W W W

Inbox | Transaction Shelf

Manufacturing Standard: Made of laminate, to be attached to an Inbox reception counter, 1" transaction shelf comes in 2 pieces and is available in laminate, stained wood or white opaque lacquered MDF.

INBS

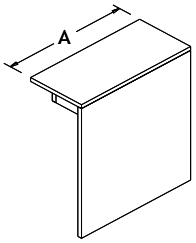

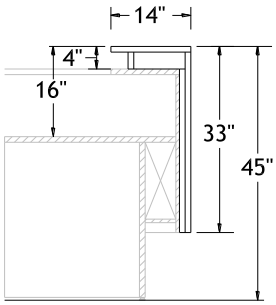

A	Code	
30 INBS M	636	*1" laminate*
30 INBS L	879	*1" lacquered MDF*
30 INBS W	1020	*1" stained wood*

Combination of colors? Specify:

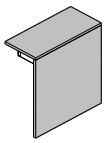

Top

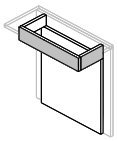

Base

Notes:

How to Order?

		INBS M INBS L			
	A	INBS W		Top	Base
RE	**30**	_ _	/	_ _	_ _
Series	Width	Product		Colors	

See the Logiflex Color Chart.

Example RE 30 INBS M / W LL

Spheric

Spheric | Manufacturing Standard

1. Top

All tops are 1" laminate.

2. Front Panels

All front panels are high pressure laminate (HPL).

3. Grommet

Grommets are included with all Spheric reception desks. The standard grommet is CAPF. Consult the "Accessories" section for more details on the grommet.

4. Wood Grain

The wood grain runs horizontally on all fronts and front panels of Spheric furniture.

5. Leveler

All Spheric reception desks sit on black plastic levelers.

6. Colors

Colors have to be specified for all furniture items ordered. Consult the "How to Order" section of the product page for further details about the procedure. Consult the Logiflex Color Chart for the colors and finishes offered. Unless indicated otherwise in the order, the PVC edge will match with the color and finish specified.

7. Shelves

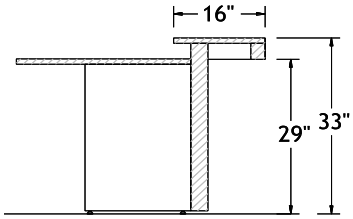

Accessible Shelf

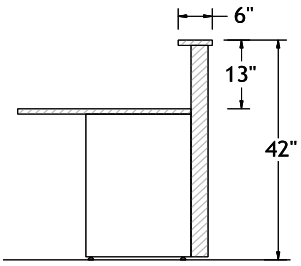

Finishing Shelf

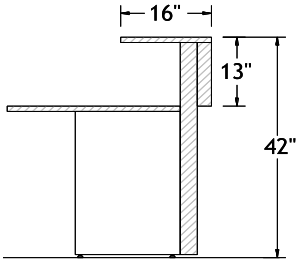

Transaction Shelf

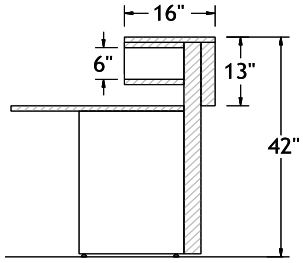

Transaction Shelf with Pigeonhole Unit

Spheric | Quarter-Moon Reception Desk

Manufacturing Standard: 1" tops, curved front panels made of high pressure laminate, centered CAPF grommet.

SPH F

Finishing Shelf

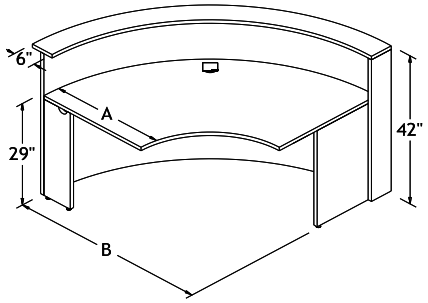

Dimensions			HPL front panels
A	B	CODE	Hpl
24	46	SPHF	2940
24	46	SPHT	3755
24	46	SPHP	4775
30	54	SPHF	3239
30	54	SPHT	4333
30	54	SPHP	5113

SPH T

Transaction Shelf

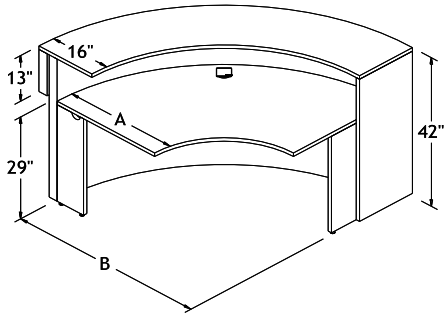

SPH P

Transaction Shelf with Pigeonhole Unit

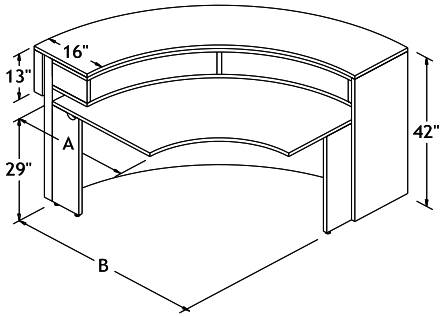

Direction

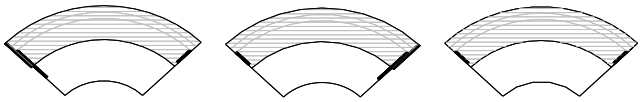

L
Finished on left

R
*Finished on right**
**As shown*

C
No finish
(If between 2 desks)

Grommet

CAPF
$20 if GLR

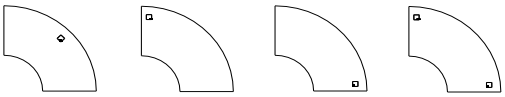

GRC (std) GRL GRR GLR

No grommet
NGR

Combination of colors? Specify:

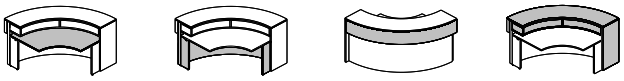

Top Base Front* Shelf

Notes:

How to Order?

**Front and front panels shown*

				GRC (std)					
				GRL					
		SPH F	L	GRR					
		SPH T	R	GLR					
	A B	SPH P	C	NGR		Top	Base	Front	Shelf
RE	_ _	_ _	_ _	_ _	/	_ _	_ _	_ _	_ _
Series	Dimensions	Product	Direction	Grommet		Colors			

See the Logiflex Color Chart.

Example RE 24 46 SPH F L GRC / LL W W LL

Spheric | Quarter-Moon Consulting Desk

Manufacturing Standard: 1" tops, curved front panels made of high pressure laminate, centered CAPF grommet.

SPH C

Consulting desk

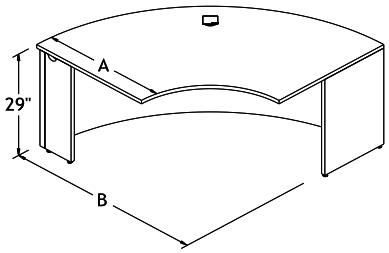

Dimensions A B	HPL front panels Hpl	*Fits with Spheric desks having a depth of*
27 46 SPH C	2617	*24"*
33 54 SPH C	2776	*30"*

Direction

L
Finished on left

R
*Finished on right**
**As shown*

C
No finish
(If between 2 desks)

Grommet

CAPF
$20 if GLR

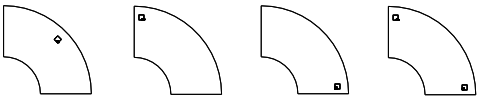

No grommet

GRC (std) GRL GRR GLR NGR

Combination of colors? Specify:

Top Base

Notes:

How to Order?

				GRC (std)			
				GRL			
			L	GRR			
			R	GLR			
	A B		C	NGR		Top	Base
RE	_ _	**SPH C**	_ _	_ _	/	_ _	_ _
Series	Dimensions	Product	Direction	Grommet		Colors	

See the Logiflex Color Chart.

Example RE 27 46 SPH C L GRC / LL W

Spheric | Quarter-Moon Accessible Reception Desk

Manufacturing Standard: 1" tops, curved front panels made of high pressure laminate, centered CAPF grommet.

SPH A

Accessible Shelf

Dimensions	HPL front panels
A B	Hpl
24 46 SPH A	3971
30 54 SPH A	4131

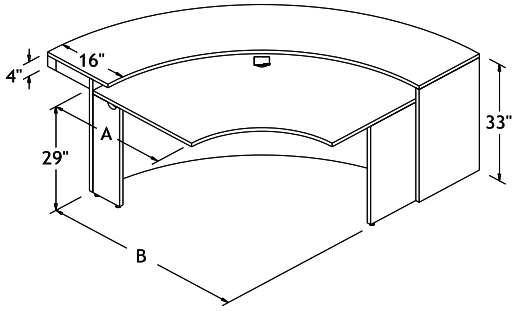

Direction

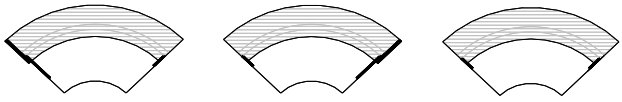

L
Finished on left

R
*Finished on right**
**As shown*

C
No finish
(If between 2 desks)

Grommet

CAPF
$20 if GLR

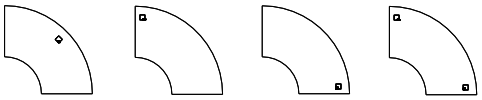

No grommet

GRC (std) GRL GRR GLR NGR

Combination of colors? Specify:

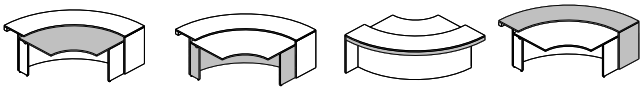

Top Base Front* Shelf

Notes:

How to Order?

**Front and front panels shown*

				GRC (std)					
				GRL					
			L	GRR					
			R	GLR					
	A B		C	NGR		Top	Base	Front	Shelf
RE	_ _	**SPH A**	_ _	_ _	/	_ _	_ _	_ _	_ _
Series	Dimensions	Product	Direction	Grommet		Colors			

See the Logiflex Color Chart.

Example RE 3054 SPH A L GRC / LL W W LL

Spheric | Inverted Quarter-Moon Reception Desk

Manufacturing Standard: 1" tops, curved front panels made of high pressure laminate, centered CAPF grommet.

SPH IF

Finishing Shelf

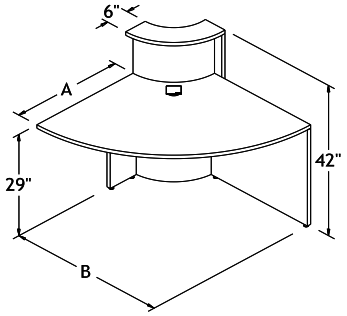

Dimensions			HPL front panels
A	B	CODE	Hpl
24	36	SPHIF	3063
24	36	SPHIT	3127
24	36	SPHIP	3857
30	42	SPHIF	3125
30	42	SPHIT	3238
30	42	SPHIP	3971

SPH IT

Transaction Shelf

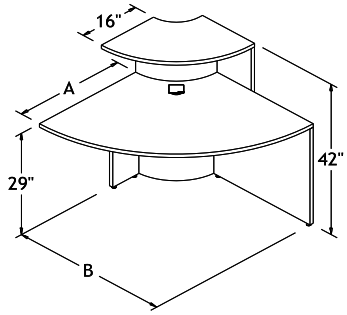

SPH IP

Transaction Shelf with Pigeonhole Unit

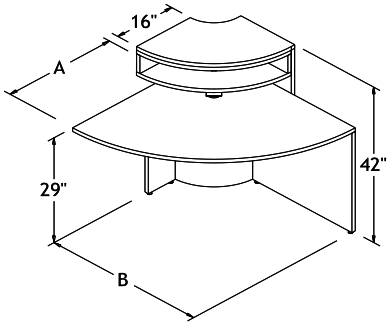

Direction

L
Finished on left

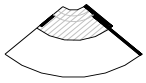

R
*Finished on right**
**As shown*

C
No finish
(If between 2 desks)

Grommet

CAPF

GRC (std)

No grommet

NGR

Combination of colors? Specify:

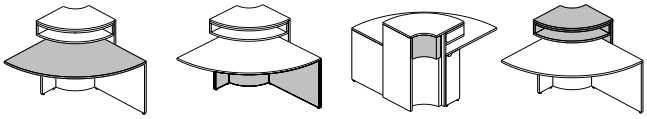

Top Base Front* Shelf

Notes:

How to Order?

**Front and front panels shown*

		SPH IF	L						
		SPH IT	R	GRC (std)					
	A B	SPH IP	C	NGR		Top	Base	Front	Shelf
RE	_ _	_ _	_ _	_ _	/	_ _	_ _	_ _	_ _
Series	Dimensions	Product	Direction	Grommet		Colors			

See the Logiflex Color Chart.

Example RE 2436 SPH IF L GRC / LL W W LL

Spheric | Inverted Quarter-Moon Consulting Desk

Manufacturing Standard: 1" tops, curved front panels made of high pressure laminate, centered CAPF grommet.

SPH IC

Consulting

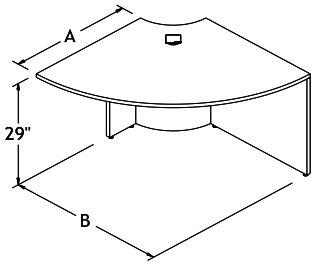

Dimensions A B	HPL front panels Hpl	*Fits with Spheric desks having a depth of*
27 36 SPHIC	2504	*24"*
33 42 SPHIC	2617	*30"*

Direction

L
Finished on left

R
*Finished on right**
**As shown*

C
No finish
(If between 2 desks)

Grommet

CAPF

GRC (std)

No grommet

NGR

Combination of colors? Specify:

Top

Base

Notes:

How to Order?

			L				
			R	GRC (std)			
	A B		C	NGR		Top	Base
RE	_ _	SPH IC	_ _	_ _	/	_ _	_ _
Series	Dimensions	Product	Direction	Grommet		Colors	

See the Logiflex Color Chart.

Example RE 27 36 SPH IC L GRC / LL W

Spheric | Straight Reception Desk

Manufacturing Standard: 1" tops, front panels made of high pressure laminate, centered CAPF grommet.

SPH SF

Finishing Shelf

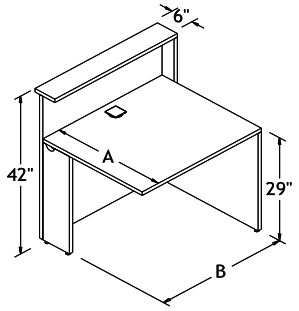

SPH ST

Transaction Shelf

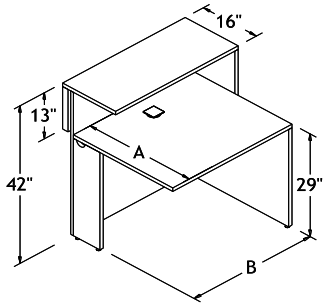

SPH SP

Transaction Shelf with Pigeonhole Unit

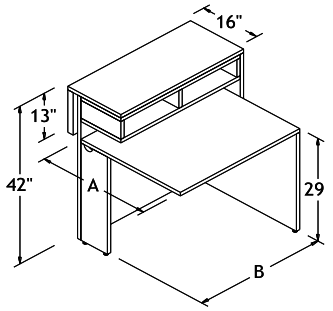

Dimensions			HPL front panels
A	B	CODE	Hpl
24	36	SPH SF	1031
24	36	SPH ST	1156
24	36	SPH SP	1360
30	36	SPH SF	1065
30	36	SPH ST	1190
30	36	SPH SP	1416

Direction

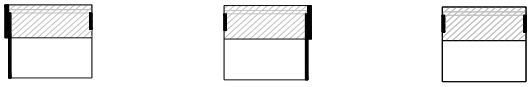

L
Finished on left

R
*Finished on right**
**As shown*

C
No finish
(If between 2 desks)

Grommet

CAPF
$20 if GLR

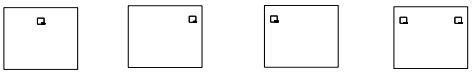

No grommet

GRC (std) GRR GRL GLR NGR

Installed Pedestal Option ($)

See section J for installed pedestals available. Attention: The total width of the installed pedestal has to be less than the total width of the desk.

Combination of colors? Specify:

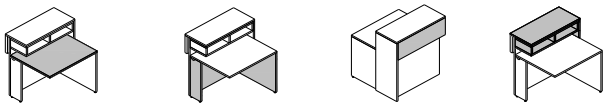

Top Base Front* Shelf

Notes:

How to Order?

**Front and front panels shown*

						GRC (std)					
						GRR					
				SPH SF	L	GRL					
				SPH ST	R	GLR					
	on left	A B	*on right*	SPH SP	C	NGR		Top	Base	Front	Shelf
RE	[_ _]	_ _	[_ _]	_ _	_ _	_ _	/	_ _	_ _	_ _	_ _
Series	[Pedestal] *Option ($)*	Dimensions	[Pedestal] *Option ($)*	Product	Direction	Grommet		Colors *See the Logiflex Color Chart.*			

Example RE [E]24 36 SPH SF L GRC / LL W W LL

Spheric | Straight Consulting Desk

Manufacturing Standard: 1" tops, front panels made of high pressure laminate, centered CAPF grommet.

SPH SC

Consulting

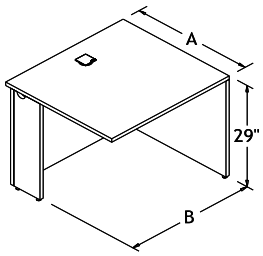

Dimensions A B	HPL front panels Hpl	*Fits with Spheric desks having a depth of*
27 36 SPH SC	646	*24"*
33 36 SPH SC	759	*30"*

Direction

L
Finished on left

R
*Finished on right**
**As shown*

C
No finish
(If between 2 desks)

Grommet

CAPF
$20 if GLR

GRC (std)

GRR

GRL

GLR

No grommet

NGR

Combination of colors? Specify:

Top

Base

Front*

Notes: **If applicable*

How to Order?

						GRC (std)				
						GRL				
					L	GRR				
					R	GLR				
	on left	A B	*on right*		C	NGR		Top	Base	Front
RE	[_ _]	_ _	[_ _]	SPH SC	_ _	_ _	/	_ _	_ _	_ _
Series	[Pedestal] *Option ($)*	Dimensions	[Pedestal] *Option ($)*	Product	Direction	Grommet		Colors *See the Logiflex Color Chart.* **If applicable*		

Example RE 27 36 SPH SC L GRC / LL W LL

Spheric | Straight Accessible Reception Desk

Manufacturing Standard: 1" tops, front panels made of high pressure laminate, centered CAPF grommet.

SPH SA

Accessible Shelf

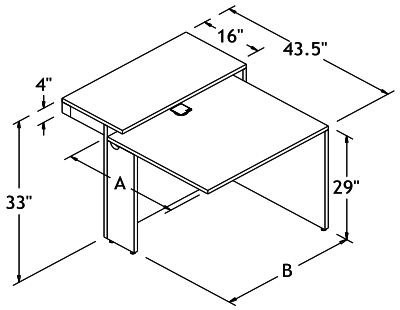

Dimensions	HPL front panels
A B	Hpl
24 36 SPH SA	1156
30 36 SPH SA	1190

Direction

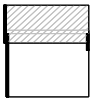

L
Finished on left

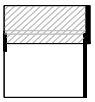

R
*Finished on right**
**As shown*

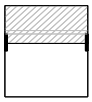

C
No finish
(If between 2 desks)

Grommet

CAPF
$20 if GLR

GRC (std)

GRR

GRL

GLR

No grommet

NGR

Combination of colors? Specify:

Top

Base

Front*

Shelf

Notes:

**If applicable*

How to Order?

***Front and front panels shown*

					GRC (std)						
					GRL						
				L	GRR						
				R	GLR						
	on left	A B	*on right*		C	NGR		Top	Base	Front	Shelf
RE	[_ _]	_ _	[_ _]	SPH SA	_ _	_ _	/	_ _	_ _	_ _	_ _
Series	[Pedestal] *Option ($)*	Dimensions	[Pedestal] *Option ($)*	Product	Direction	Grommet		Colors *See the Logiflex Color Chart.* **If applicable*			

Example RE 24 36 SPH SA L GRC / LL W W LL

Manhattan

Manhattan | Manufacturing Standard

1. Top

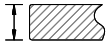

All tops are 1-5/8" thick.

2. Fronts and Front Panels

Fronts and front panels are 1" laminate with the exception of rounded corners, which are high pressure laminate.

3. Grommet

Grommets are included with all desks. The standard grommet is CAPF, in a satin nickel finish.

4. Shelf Bracket

Shelf brackets are 2.5" in diameter and have a satin nickel finish.

5. Wood Grain

The wood grain runs vertically on fronts and front panels.

6. Leveler

All furniture items sit on black plastic levelers.

7. Colors

Colors have to be specified for all furniture items ordered. Consult the "How to Order" section of the product page for further details about the procedure. Consult the Logiflex Color Chart for the colors and finishes offered. Unless indicated otherwise in the order, the PVC edge will match with the color and finish specified.

8. Pedestal

66" x 66" desk: Pedestals cannot be installed on reception stations that are 66" X 66" because of the curves close to the user space. We suggest mobile pedestals instead.
72" x 72" desk: Pedestals larger than 30" cannot be installed on reception stations that are 72" X 72" because of the curves close to the user space.

See section J for further information about pedestals.

Manhattan | Reception Desk

Manufacturing Standard: 1-5/8" desk and shelf tops, rounded corner front panel made of high pressure laminate (HPL), satin nickel finish shelf brackets, centred CAPF grommet.

MAN

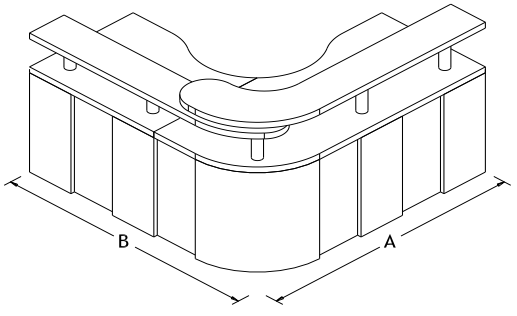

Dimensions	Tops	
	Tfl (REC)	Hpl (RECL)
66 66	4985	5694
72 72	5127	5836
78 78	5269	5977
84 84	5413	6149
96 96	5694	6424

Direction

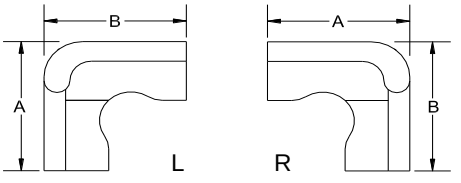

Grommet

$20 for each additional grommet.

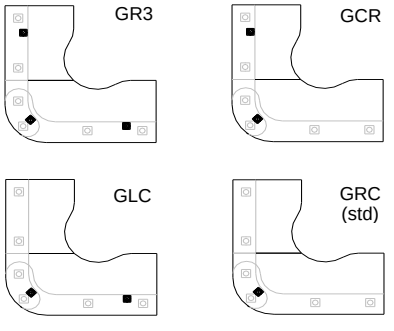

NGR

No grommet

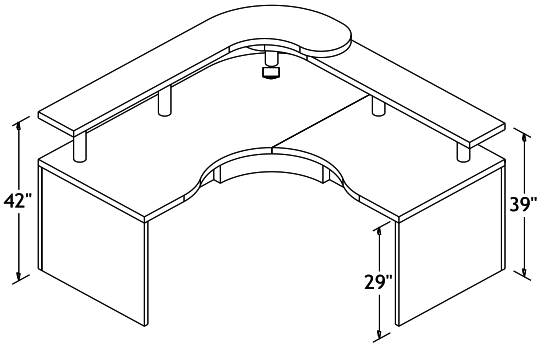

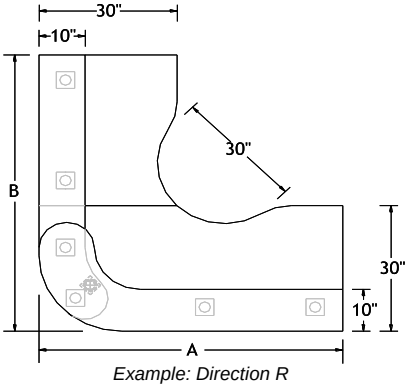

Example: Direction R

Acrylic Panel Option ($)

See the following page for further details about the acrylic panel option.

Combination of colors? Specify:

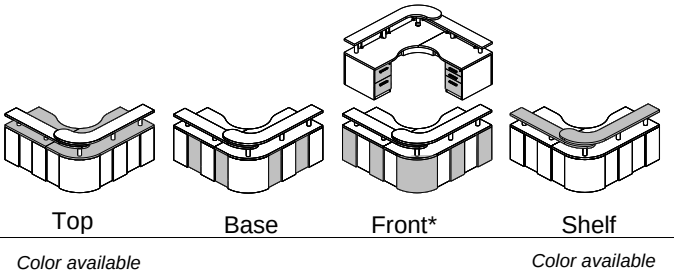

Notes: *Color available for 1-5/8"* *Color available for 1-5/8"*

**Front and front panels shown*

How to Order?

						GRC (std)						
						GCR						
						GLC						
					R	GR3						
	on left	A B	*on right*		L	NGR		PL	Top	Base	Front	Shelf
RE	[_ _]	_ _	[_ _]	**MAN**	_ _	_ _	/	[_ _]	_ _	_ _	_ _	_ _
Series	[Pedestal] *Option ($)*	Dimensions	[Pedestal] *Option ($)*	Product	Direction	Grommet		Acrylic *Option ($)*				

**Pedestals are not available for desks that are 66" x 66"*

Example RE 78 78 MAN R / W SW SW W

Manufacturing Standard: 1/8" frosted acrylic panels polished on the visible sides, satin nickel finish brackets.

Option

	Option ($)
PL	*1641*

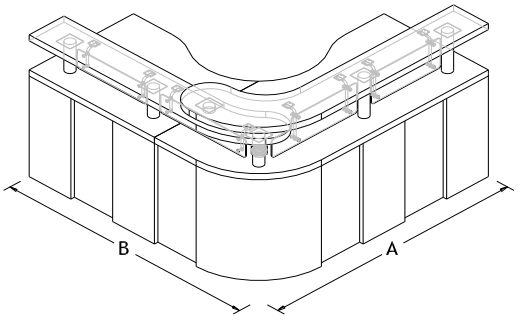

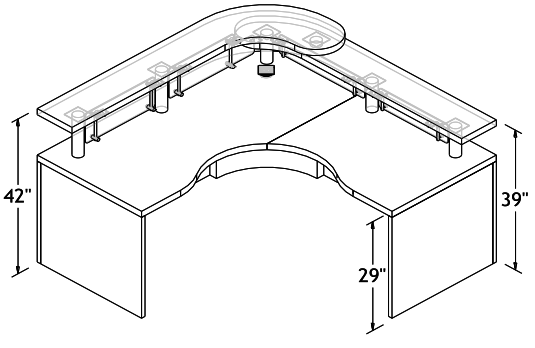

Details

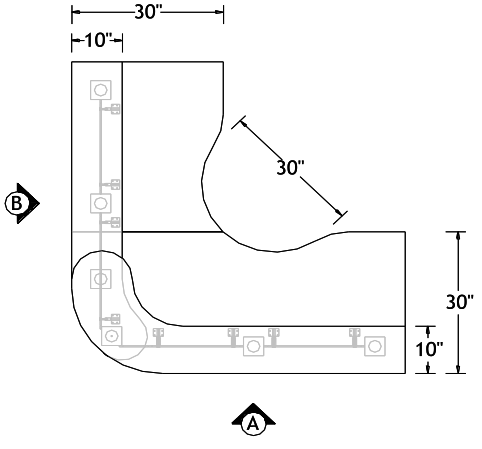

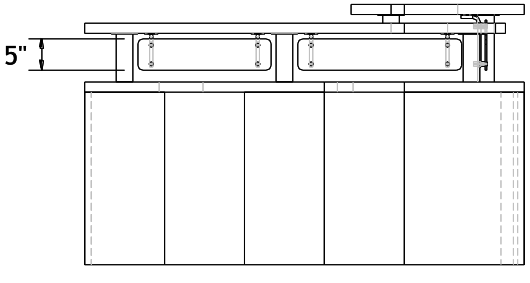

Elevation B

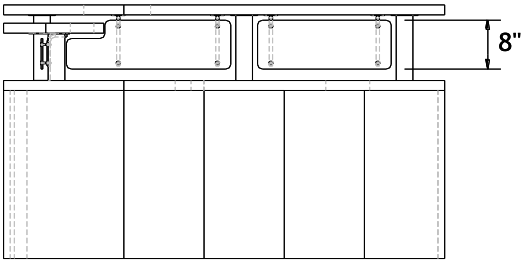

Elevation A

How to Order?

Add the acrylic panel code to the code of the Manhattan desk on which it has to be installed, following the "How to Order" instructions on the desk page.

3K

3K | Manufacturing Standard

1. Tops

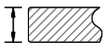

All tops and shelves are 1" thick.

2. Front and Front Panels

Fronts and front panels are 5/8" laminate. A strip of brushed aluminum high pressure laminate is applied to the kick plate and between the front panels.

3. Grommet

Grommets are included with all desks. The standard grommet is CAPF, in a satin nickel finish.

4. Shelf Bracket

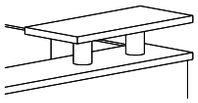

Shelf brackets are 1.75" in diameter, 4-3/8" high and have a satin nickel finish.

5. Wood Grain

The wood grain runs horizontally on fronts.

6. Leveler

All furniture items sit on black plastic levelers.

7. Colors

Colors have to be specified for all furniture items ordered. Consult the "How to Order" section of the product page for further details about the procedure. Consult the Logiflex Color Chart for the colors and finishes offered. Unless indicated otherwise in the order, the PVC edge will match with the color and finish specified.

3K | Reception Desk

Manufacturing Standard: 1" tops, 2 CAPF grommets, full modesty panel, 2 front panels 5/8" thick, strip of brushed aluminum high pressure laminate on the kick plate and between the front panels.

3K1

1 Full-Length Transaction Shelf

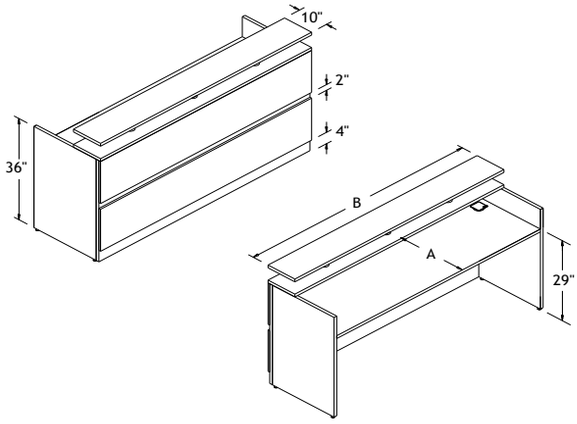

Dimensions A B	Front STD	HG
24 66	2130	2365
24 72	2323	2579
24 78	2521	2799
24 84	2714	3013
24 96	3099	3441
30 66	2170	2421
30 72	2368	2630
30 78	2572	2857
30 84	2771	3075
30 96	3161	3509

3K2

2 Transaction Shelves

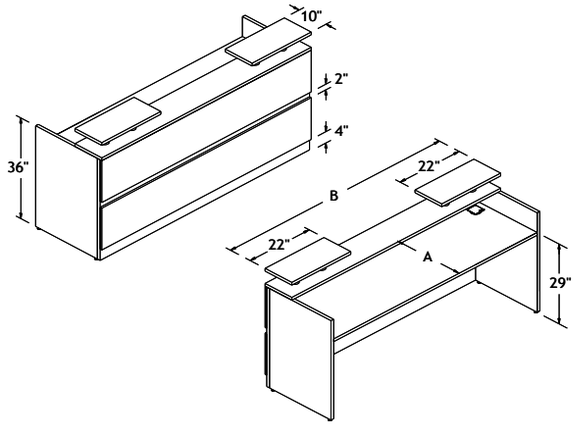

Grommet

CAPF

GRC | GLR (std) | GRL | GRR | No grommet NGR

Combination of colors? Specify:

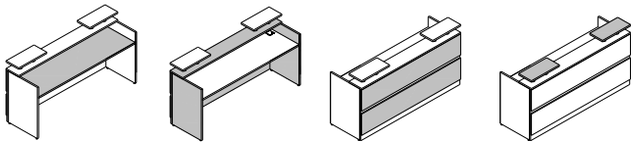

Top | Base | Front* | Shelf

Notes:

How to Order?

**Front and front panels shown*

					GRC GRR GRL (std)					
				3K1	GLR					
	on left	A B	*on right*	3K2	NGR		Top	Base	Front	Shelf
RE	[_ _]	_ _	[_ _]	_ _	_ _	/	_ _	_ _	_ _	_ _
Series	[Pedestal] *Option ($)*	Dimensions	[Pedestal] *Option ($)*	Product	Grommet		Colors *See the Logiflex Color Chart.*			

Example RE 24 66 3K1 GRC / SW SW W

3K | Return

Manufacturing Standard: 1" tops, centred CAPF grommet, full modesty panel.

RET 3K

Dimensions	Front
A B	STD
24 30	533
24 36	555
24 42	584
24 48	612

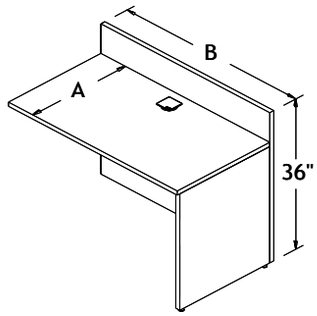

R

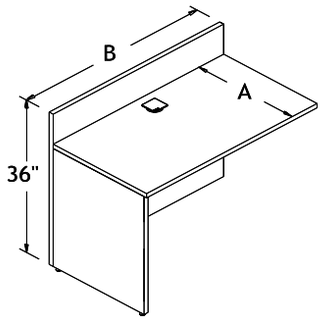

L

Grommet

CAPF

$20 if GLR

GRC (std) | GLR | GRL | GRR | No grommet NGR

Direction

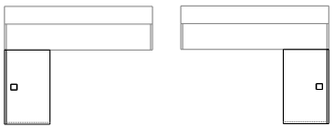

L R

Combination of colors? Specify:

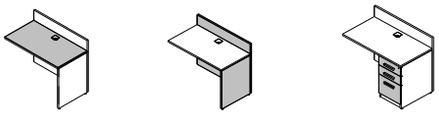

Top Base Front*

Notes: **If applicable*

How to Order?

Series	A B Dimensions	[Pedestal] Option ($)	RET 3K Product	L R Direction	GRC (std) GRR GRL GLR NGR Grommet	/	Top	Base	Front*
RE	_ _	[_ _]	_ _	_ _	_ _	/	_ _	_ _	_ _
							Colors		

See the Logiflex Color Chart.

Example RE 24 42 [E] RET 3K R GRC / SW SW W

C Series

1. Top

RE	REL	REC	RECL
1"	*1-1/16"*	*1-5/8"*	*1-9/16"*

2. Grommet

Grommet is included with all work desks. The standard grommet is CAPF.

3. Wood Grain

The wood grain runs vertically on fronts and front panels.

4. Leveler

All furniture items sit on black plastic levelers.

5. Colors

Colors have to be specified for all furniture items ordered. Consult the "How to Order" section of the product page for further details about the procedure. Consult the Logiflex Color Chart for the colors and finishes offered. Unless indicated otherwise in the order, the PVC edge will match with the color and finish specified.

6. Vertical Panel Option (PV)

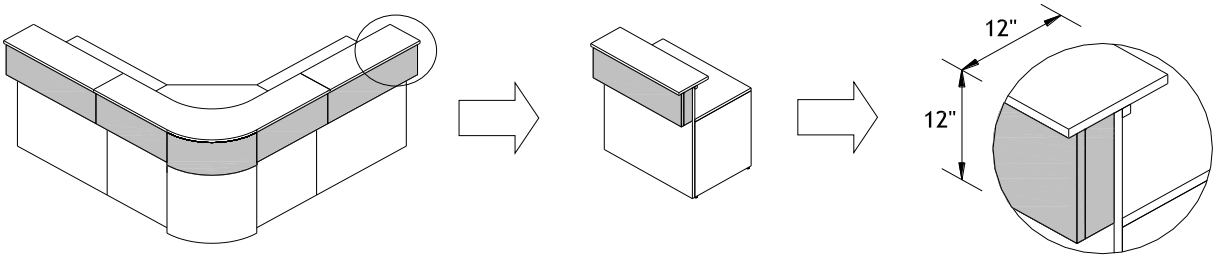

It is possible to add a 12"H vertical panel on the front of the reception, under the transaction shelf. It is in high pressure laminate (HPL).

C Series | Corner Counter

Manufacturing Standard : Corner reception desk, straight keyboard space (CXT) or curved keyboard space (CXX), 42"H transaction shelf, centered (GRC) CAPF grommet.

CXT

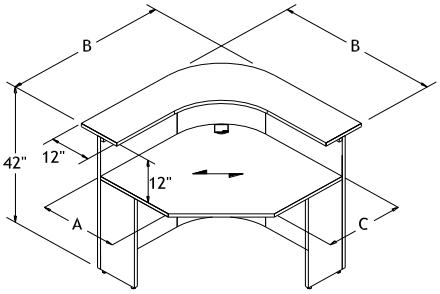

Dimensions A B C	RE 1"	REL 1-1/16"	REC 1-5/8"	RECL 1-9/16"
18 36 18	2597	2788	2788	2922
18 42 18	2640	2885	2885	3059
24 42 24	2640	2885	2885	3059
24 48 24	2752	3061	3061	3284
30 48 30	2752	3061	3061	3284

CXX

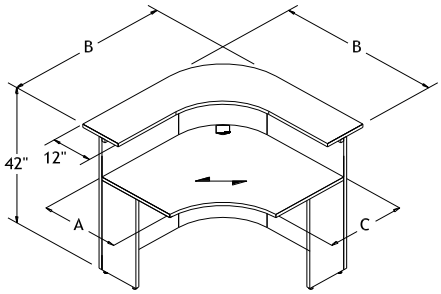

Dimensions A B C	RE 1"	REL 1-1/16"	REC 1-5/8"	RECL 1-9/16"
18 42 18	2717	2965	2965	3139
24 42 24	2717	2965	2965	3139
24 48 24	2830	3143	3143	3365
30 48 30	2830	3143	3143	3365

Grommet

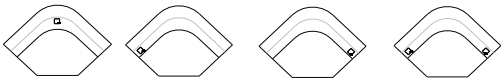

GRC (std) | GRL | GRR | GLR | No grommet NGR

Direction

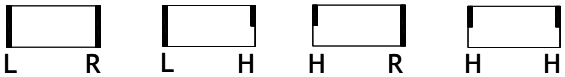

Combination of colors? Specify:

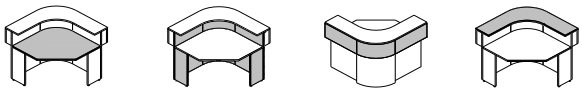

Top | Base | Front* | Shelf

Notes:

How to Order?

**Front and front panels shown*

Series	Dimensions	Product	Direction	Grommet		/	Vertical Panel Option $	Colors (See the Logiflex Color Chart.)			
RE			LR	GRC (std) GRL							
REL			LH	GRR							
REC		CXT	HR	GLR			$688				
RECL	ABC	CXX	HH	NGR	CAPF (std)		[PV]	Top	Base	Front*	Shelf
	_ _	_ _	_ _	_ _	_ _	/	[_ _]	_ _	_ _	_ _	_ _

Example RE 184218 CXT LR GRC CAPF / NW NW W

C Series | Desk

Manufacturing Standard : Rectangular reception desk, 42"H transaction shelf, centered (GRC) CAPF grommet for desks less than 48", left and right grommets for desks of 48" and up.

CTB

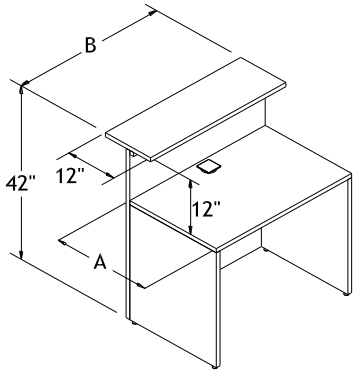

Dimensions A B	RE 1"	REL 1-1/16"	REC 1-5/8"	RECL 1-9/16"
18 36	652	768	768	867
18 42	682	811	811	914
18 48	711	850	850	970
18 54	782	922	922	1090
18 60	830	994	994	1112
24 36	688	820	820	921
24 42	724	871	871	985
24 48	781	945	945	1074
24 54	838	1015	1015	1178
24 60	872	1072	1072	1218
30 36	724	872	872	975
30 42	766	930	930	1056
30 48	851	1040	1040	1178
30 54	895	1107	1107	1267
30 60	915	1152	1152	1324

Grommet

See the manufacturing standard for further details.

GRC	GRL	GRR	GLR	No grommet NGR

Direction

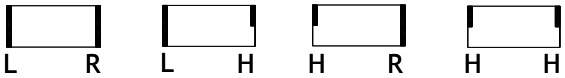

Combination of colors? Specify:

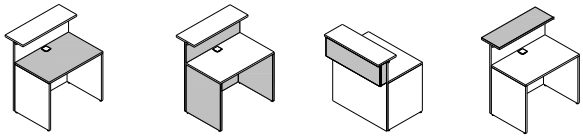

Top	Base	Front*	Shelf

Notes:

How to Order?

**Front and front panels shown*

RE / REL / REC / RECL	on left	A B	on right		LR / LH / HR / HH	GRC / GRL / GRR / GLR / NGR	CAPF		$155 [PV]	Top	Base	Front*	Shelf
	[_ _]	_ _	[_ _]	**CTB**	_ _	_ _	_ _	/	[_ _]	_ _	_ _	_ _	_ _
Series	Pedestal *Option $*	Dimensions	Pedestal *Option $*	Product	Direction	Grommet			*Vertical Panel* Option $	Colors *See the Logiflex Color Chart.*			

Example RE [E] 24 60 CTB LH GRC CAPF / [PV] NW NW W W

C Series | Return

Manufacturing Standard: Left reception return with corner cut (CT) on right, 42"H transaction shelf, centered (GRC) CAPF grommet for desks less than 48", left and right grommets for desks of 48" and up.

L CTTB

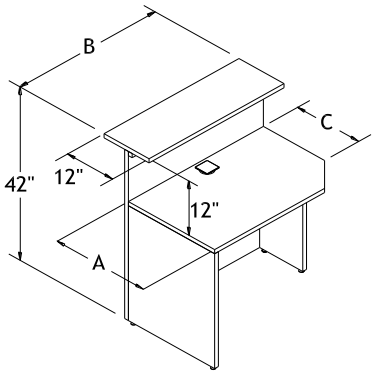

Dimensions A B C	RE 1"	REL 1-1/16"	REC 1-5/8"	RECL 1-9/16"
24 36 18	732	864	864	965
24 42 18	768	916	916	1029
24 48 18	825	989	989	1119
24 54 18	883	1058	1058	1223
24 60 18	917	1117	1117	1262
30 36 24	768	917	917	1020
30 42 24	809	967	967	1100
30 48 24	895	1085	1085	1223
30 54 24	939	1152	1152	1311
30 60 24	959	1196	1196	1368
36 36 30	852	1016	1016	1100
36 42 30	902	1092	1092	1214
36 48 30	952	1169	1169	1328
36 54 30	1001	1245	1245	1424
36 60 30	1032	1296	1296	1490

Grommet

See the manufacturing standard for further details.

GRC	GRL	GRR	GLR	No grommet NGR

Direction

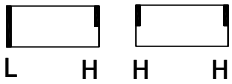

Combination of colors? Specify:

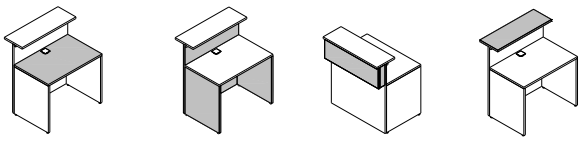

Top	Base	Front*	Shelf

Notes:

How to Order?

**Front and front panels shown*

Series	[Pedestal] *Option ($)*	A B C	Product	Direction	Grommet		/	*Vertical Panel* Option $	Colors *See the Logiflex Color Chart.*			
RE REL REC RECL	on left			LH HH	GRC GRL GRR GLR NGR	CAPF (std)		$155 [PV]	Top	Base	Front*	Shelf
	[_ _]	_ _	**LCTTB**	_ _	_ _	_ _	/	[_ _]	_ _	_ _	_ _	_ _

Example RE [E] 24 60 18 LCTTB LH GRC CAPF / [PV] NW NW W W

Manufacturing Standard: Right reception return with corner cut (CT) on left, 42" high transaction shelf, centered (GRC) CAPF grommet for desks less than 48", left and right grommets for desks of 48" and up.

R CTTB

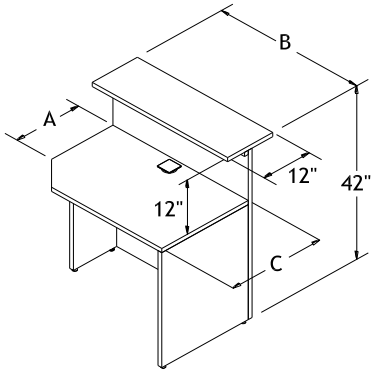

Dimensions A B C	RE 1"	REL 1-1/16"	REC 1-5/8"	RECL 1-9/16"
18 36 24	732	864	864	965
18 42 24	768	916	916	1029
18 48 24	825	989	989	1119
18 54 24	883	1058	1058	1223
18 60 24	917	1117	1117	1262
24 36 30	768	917	917	1020
24 42 30	809	967	967	1100
24 48 30	895	1085	1085	1223
24 54 30	939	1152	1152	1311
24 60 30	959	1196	1196	1368
30 36 36	852	1016	1016	1100
30 42 36	902	1092	1092	1214
30 48 36	952	1169	1169	1328
30 54 36	1001	1245	1245	1424
30 60 36	1032	1296	1296	1490

Grommet

See the manufacturing standard for further details.

GRC GRL GRR GLR No grommet **NGR**

Direction

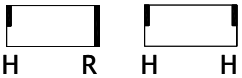

H R H H

Combination of colors? Specify:

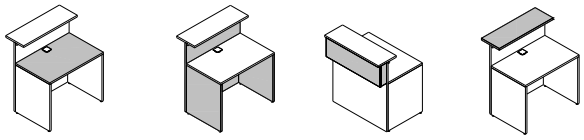

Top Base Front* Shelf

Notes:

How to Order?

**Front and front panels shown*

RE / REL / REC / RECL	A B C	*on right*		HR / HH	GRC / GRL / GRR / GLR / NGR	CAPF (std)	/	$155 [PV]	Top	Base	Front*	Shelf
_ _ _ _	_ _	[_ _]	**RCTTB**		_ _	_ _	/	[_ _]	_ _	_ _	_ _	_ _
Series		[Pedestal] *Option ($)*	Product	Direction	Grommet			*Vertical Panel* Option $	Colors *See the Logiflex Color Chart.*			

Example RE 18 60 24 [E] RCTTB HR GRC CAPF / [PV] NW NW W W

C Series | Return

Manufacturing Standard: Right reception return with curved cut (CV) on left, 42" high transaction shelf, centered (GRC) CAPF grommet for desks less than 48", left and right grommets for desks of 48" and up.

L CVTB

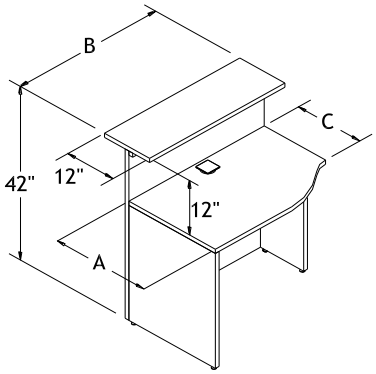

Dimensions A B C	RE 1"	REL 1-1/16"	REC 1-5/8"	RECL 1-9/16"
24 36 18	732	864	864	965
24 42 18	768	916	916	1029
24 48 18	825	989	989	1119
24 54 18	883	1058	1058	1223
24 60 18	917	1117	1117	1262
30 36 24	768	917	917	1020
30 42 24	809	967	967	1100
30 48 24	895	1085	1085	1223
30 54 24	939	1152	1152	1311
30 60 24	959	1196	1196	1368
36 36 30	852	1016	1016	1100
36 42 30	902	1092	1092	1214
36 48 30	952	1169	1169	1328
36 54 30	1001	1245	1245	1424
36 60 30	1032	1296	1296	1490

Grommet

See the manufacturing standard for further details.

GRC	GRL	GRR	GLR	No grommet **NGR**

Direction

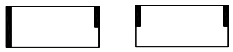

L H H H

Combination of colors? Specify:

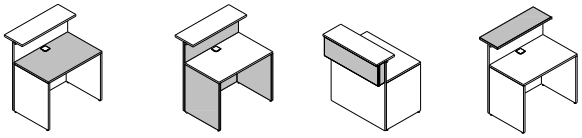

Top	Base	Front*	Shelf

Notes:

How to Order?

**Front and front panels shown*

RE / REL / REC / RECL	A B C	on right		HR / HH	GRC / GRL / GRR / GLR / NGR	CAPF (std)	/	$155 [PV]	Top	Base	Front*	Shelf
_ _ _ _	_ _	[_ _]	**LCVTB**	_ _	_ _	_ _	/	[_ _]	_ _	_ _	_ _	_ _
Series		[Pedestal] *Option ($)*	Product	Direction	Grommet			*Vertical Panel* Option $	Colors *See the Logiflex Color Chart.*			

Example RE 18 36 24 [F] LCVTB HR GRC CAPF / [PV] NW NW W W

C Series | Return

Manufacturing Standard: Left reception return with curved cut (CV) on right, 42"H transaction shelf, centered (GRC) CAPF grommet for desks less than 48", left and right grommets for desks of 48" and up.

R CVTB

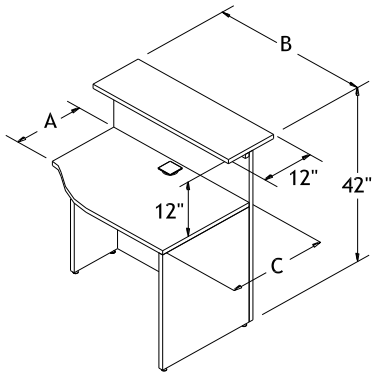

Dimensions A B C	RE 1"	REL 1-1/16"	REC 1-5/8"	RECL 1-9/16"
18 36 24	732	864	864	965
18 42 24	768	916	916	1029
18 48 24	825	989	989	1119
18 54 24	883	1058	1058	1223
18 60 24	917	1117	1117	1262
24 36 30	768	917	917	1020
24 42 30	809	967	967	1100
24 48 30	895	1085	1085	1223
24 54 30	939	1152	1152	1311
24 60 30	959	1196	1196	1368
30 36 36	852	1016	1016	1100
30 42 36	902	1092	1092	1214
30 48 36	952	1169	1169	1328
30 54 36	1001	1245	1245	1424
30 60 36	1032	1296	1296	1490

Grommet

See the manufacturing standard for further details.

GRC GRL GRR GLR No grommet **NGR**

Direction

H R H H

Combination of colors? Specify:

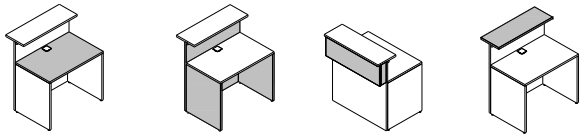

Top Base Front* Shelf

Notes:

How to Order?

**Front and front panels shown*

					GRC							
REC					GRL							
REL					GRR							
REC				LH	GLR			$155				
RECL	*on left*	A B C		HH	NGR	CAPF (std)		[PV]	Top	Base	Front*	Shelf
_ _ _ _	[_ _]	_ _	**RCVTB**	_ _	_ _	_ _	/	[_ _]	_ _	_ _	_ _	_ _
Series	[Pedestal] *Option ($)*		Product	Direction	Grommet			*Vertical Panel* Option $	Colors *See the Logiflex Color Chart.*			

Example RE [CBCL30] 24 60 18 RCVTB GRC CAPF / [PV] NW NW W W

Gallery

Gallery | Manufacturing Standard

1. Top

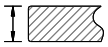

RE	REL	REC	RECL
1"	*1-1/16"*	*1-5/8"*	*1-9/16"*

2. Front

If pedestals are installed, drawer fronts are 5/8" laminate. The front panel on the desk is 1" laminate.

3. Grommet

Grommet is included with all work desks. The standard grommet is CAPF.

4. Wood Grain

The wood grain runs vertically on fronts and front panels.

5. Leveler

All furniture items sit on black plastic levelers.

6. Colors

Colors have to be specified for all furniture items ordered. Consult the "How to Order" section of the product page for further details about the procedure. Consult the Logiflex Color Chart for the colors and finishes offered. Unless indicated otherwise in the order, the PVC edge will match with the color and finish specified.

Gallery | Reception Desk

Manufacturing Standard: Rectangular reception desk, CAPF grommets on left and right (GLR), 42"H transaction shelf, 3 front panels applied on desk front.

GA

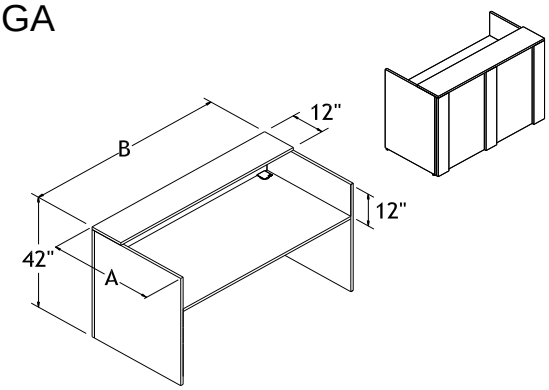

Dimensions	RE	REL	REC	RECL
A B	1"	1-1/16"	1-5/8"	1-9/16"
30 60	958	1199	1199	1373
30 66	1001	1264	1264	1451
30 72	1053	1341	1341	1549
30 78	1103	1419	1419	1647
30 84	1146	1484	1484	1724
36 60	972	1261	1261	1451
36 66	1027	1345	1345	1567
36 72	1099	1420	1420	1662
36 78	1121	1497	1497	1757
36 84	1175	1579	1579	1873

GACX

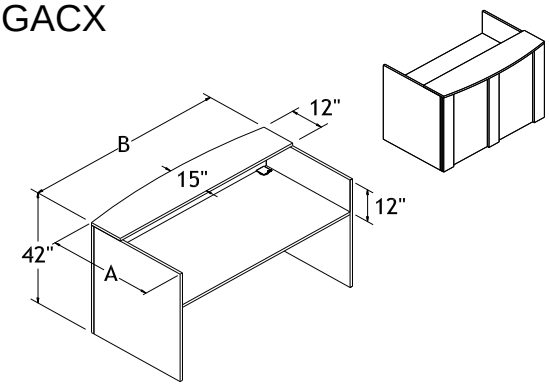

Dimensions	RE	REL	REC	RECL
A B	1"	1-1/16"	1-5/8"	1-9/16"
30 60	1119	1360	1360	1536
30 66	1164	1429	1429	1616
30 72	1214	1504	1504	1710
30 78	1266	1579	1579	1815
30 84	1310	1647	1647	1884
36 60	1133	1422	1422	1616
36 66	1189	1507	1507	1728
36 72	1236	1583	1583	1824
36 78	1282	1658	1658	1921
36 84	1339	1744	1744	2032

Grommet

GRC	GRL	GRR	GLR (std)	No grommet NGR

Combination of colors? Specify:

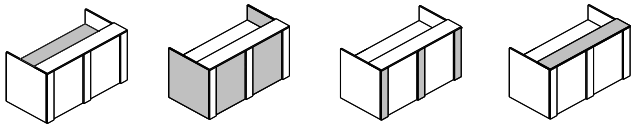

Top | Base | Front* | Shelf

Notes:

How to Order?

**Front and front panels shown*

					GRC						
RE					GRL						
REL					GRR						
REC				**GA**	GLR (std)						
RECL	*on left*	A B	*on right*	**GACX**	NGR	CAPF (std)		Top	Base	Front*	Shelf
	[_ _]	_ _	[_ _]	_ _	_ _	_ _	/	_ _	_ _	_ _	_ _
Series	[Pedestal] *Option ($)*	Dimensions	[Pedestal] *Option ($)*	Product	Grommet			Colors *See the Logiflex Color Chart.*			

Example RE 3660 [E] GA GRC CAPF / Z Z Z W

Gallery | Return

Manufacturing Standard: Reception return, CAPF centered grommet (GRC).

GAR

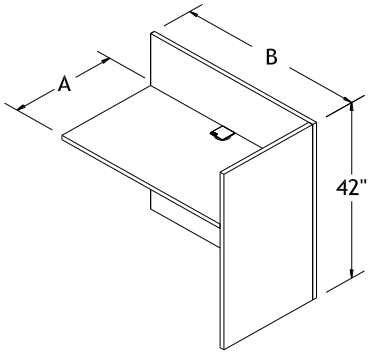

Dimensions	RE	REL	REC	RECL
A B	1"	1-1/16"	1-5/8"	1-9/16"
20 36	547	649	649	693
20 42	593	707	707	758
20 48	636	767	767	825
20 54	683	828	828	914
20 60	728	892	892	969
24 36	561	684	684	743
24 42	608	743	743	822
24 48	653	806	806	880
24 54	698	871	871	953
24 60	744	936	936	1027

GAL

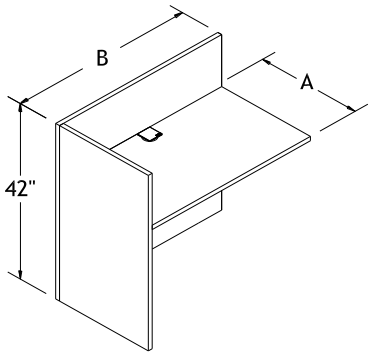

Grommet

GRC	GRL	GRR	GLR	No grommet NGR

Combination of colors? Specify:

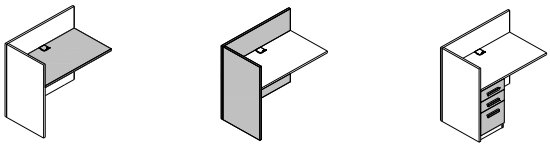

Top	Base	Front*

**If applicable*

Notes:

How to Order?

Series	Dimensions	[Pedestal] *Option ($)*	Product	Grommet		/	Colors *See the Logiflex Color Chart.*		
				GRC					
RE				GRL					
REL				GRR					
REC			GAR	GLR					
RECL	AB		GAL	NGR	CAPF (std)		Top	Base	Front*
REC	_ _	[_ _]	_ _	_ _	_ _	/	_ _	_ _	_ _

Example RE2460 [E] GAR GRC CAPF / Z Z W

Work Desks

Work Desk | Lateral Table

Manufacturing Standard: 1" thick laminate top and legs, centered CAPF grommet and full modesty panel.

TL

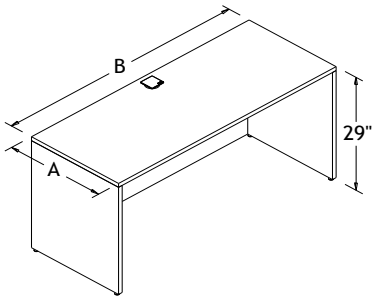

Dimensions	RE	REL	REC	RECL
A B	1"	1-1/16"	1-5/8"	1-9/16"
24 30	433	489	489	551
24 36	469	537	537	611
24 42	489	569	569	655
24 48	518	609	609	708
24 54	529	631	631	743
24 60	552	665	665	789
24 66	574	698	698	834
24 72	595	731	731	880
24 78	615	762	762	923

Modesty Panel

Not recessed

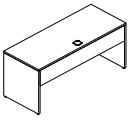

PM (10")

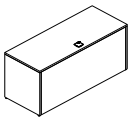

FM

Installed Pedestal Option ($)

See p.22 for installed pedestals offered. Attention: The total width of the installed pedestal has to be less than the total width of the desk.

Legs

LR LH HR HH

Grommet

CAPF

$20 if GLR

GRC GRL GRR GLR No grommet NGR

Combination of colors? Specify:

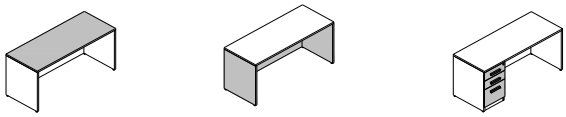

Top Base Front*

Notes:

**If installed pedestal: choice of Std or HG color.*

How to Order?

							GRC (std)				
RE					LR (std)		GRR				
REL					LH		GRL				
REC					HR	FM (std)	GLR				
RECL	*on left*	A B	*on right*		HH	PM	NGR		Top	Base	Front
_ _	[_ _]	_ _	[_ _]	**TL**	_ _	_ _	_ _	/	_ _	_ _	_ _
Series	[Pedestal] *Option ($)*	Dimensions	[Pedestal] *Option ($)*	Product	Legs	Modesty	Grommet		Colors *See the Logiflex Color Chart.*		

Example **RE [E] 24 72 TL LR / SW W SW**

Work Desk | Return

Manufacturing Standard: 1" thick laminate top and legs, centered CAPF grommet and full modesty panel.

R29

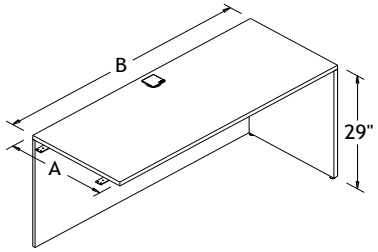

Dimensions	RE	REL	REC	RECL
A B	1"	1-1/16"	1-5/8"	1-9/16"
24 30	408	465	465	526
24 36	424	492	492	567
24 42	440	519	519	606
24 48	462	553	553	652
24 54	489	591	591	702
24 60	518	631	631	755

Installed Pedestal Option ($)

See p.22 for installed pedestals offered.
The pedestal will be installed on the leg side of the desk.

Modesty Panel

Not recessed

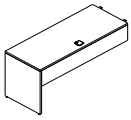

PM (10")

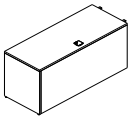

FM

L29

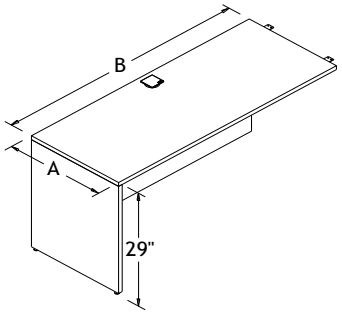

Grommet

CAPF

$20 if GLR

GRC

GRL

GRR

GLR

No grommet

NGR

Combination of colors? Specify:

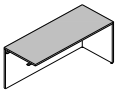

Top

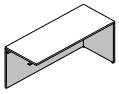

Base

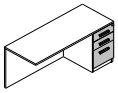

Front*

Notes:

**If installed pedestal: choice of Std or HG color.*

How to Order?

					GRC (std)				
RE					GRR				
REL					GRL				
REC			R29	FM (std)	GLR				
RECL	A B		L29	PM	NGR		Top	Base	Front
_ _	_ _	[_ _]	_ _	_ _	_ _	/	_ _	_ _	_ _
Series	Dimensions	[Pedestal] *Option ($)*	Product	Modesty	Grommet		Colors *See the Logiflex Color Chart.*		

Example **RE 24 48 [E] R29 / SW W SW**

Work Desk | Right Extended Corner

Manufacturing Standard: 1" thick laminate top and legs, CAPF grommet on the corner and full modesty panel.

S

Straight cut

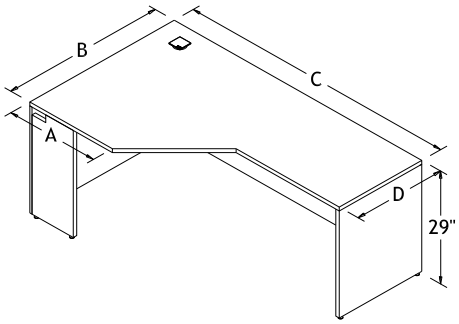

Dimensions	RE	REL	REC	RECL
A B C D	1"	1-1/16"	1-5/8"	1-9/16"
24 42 60 24	971	1170	1170	1386
24 42 66 24	1008	1227	1227	1465
24 42 72 24	1064	1302	1302	1561
24 42 78 24	1120	1377	1377	1658

Installed Pedestal Option ($)

See p.22 for installed pedestals offered.
The pedestal will be installed on the extended side of the desks (right).

Legs

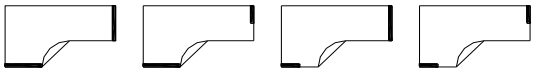

LR LH HR HH

Modesty Panel

Not recessed

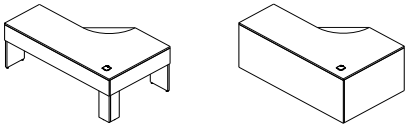

PM (10") FM

A

Curved cut

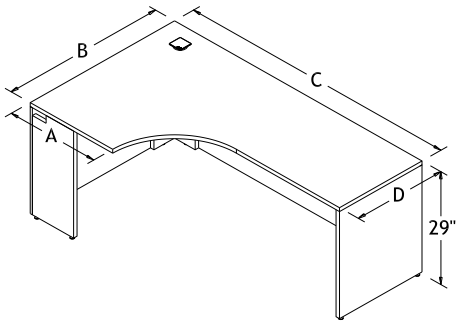

Grommet

CAPF

$20 if GLR

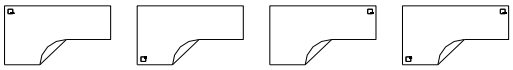

GRC (std) GRL GRR GLR No grommet NGR

Combination of colors? Specify:

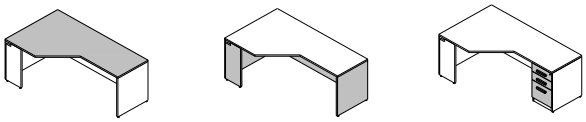

Top Base Front*

Notes:

**If installed pedestal: choice of Std or HG color.*

How to Order?

							GRC (std)				
RE					HH		GRR				
REL					LH		GRL				
REC			S		HR	FM (std)	GLR				
RECL	A B C D		A		LR	PM	NGR		Top	Base	Front
_ _	_ _ _ _	[_ _]	_ _	**R**	_ _	_ _	_ _	/	_ _	_ _	_ _
Series	Dimensions	[Pedestal] *Option ($)*	Product	Orientation	Legs	Modesty	Grommet		Colors *See the Logiflex Color Chart.*		

Example **RE 24 42 72 24 [E] A R HR / SW W SW**

Work Desk | Left Extended Corner

Manufacturing Standard: 1" thick laminate top and legs, CAPF grommet on the corner and full modesty panel.

S

Straight cut

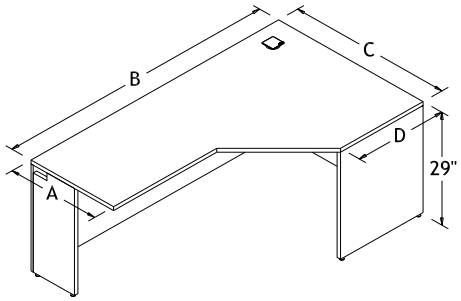

Dimensions A B C D	RE 1"	REL 1-1/16"	REC 1-5/8"	RECL 1-9/16"
24 60 42 24	971	1170	1170	1386
24 66 42 24	1008	1227	1227	1465
24 72 42 24	1064	1302	1302	1561
24 78 42 24	1120	1377	1377	1658

Installed Pedestal Option ($)

See p.22 for installed pedestals offered.
The pedestal will be installed on the extended side of the desks (left).

Legs

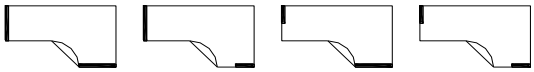

LR LH HR HH

Modesty Panel

Not recessed

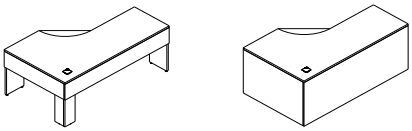

PM (10") FM (std)

A

Curved cut

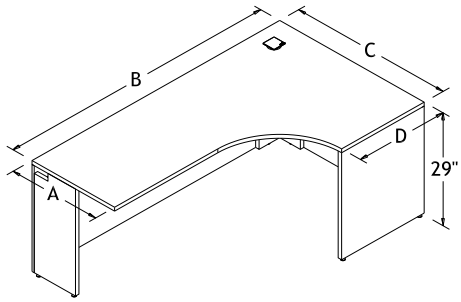

Grommet

CAPF

$20 if GLR

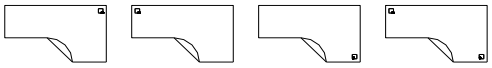

GRC (std) GRL GRR GLR No grommet NGR

Combination of colors? Specify:

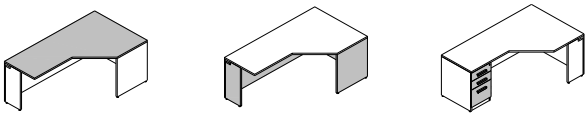

Top Base Front*

Notes:

**If installed pedestal: choice of Std or HG color.*

How to Order?

							GRC (std)				
RE					HH		GRR				
REL					LH		GRL				
REC			S		HR	FM (std)	GLR				
RECL	A B C D	*(See p.26)*	A		LR	PM	NGR		Top	Base	Front
_ _	_ _ _ _	[_ _]	_ _	**L**	_ _	_ _	_ _	/	_ _	_ _	_ _
Series	Dimensions	[Pedestal] *Option ($)*	Product	Orientation	Legs	Modesty	Grommet		Colors *See the Logiflex Color Chart.*		

Example **RE 24 72 42 24 [E] A L LH / SW W SW**

Storage Furniture

Storage | Installed Pedestal Option

Manufacturing Standard: H052CHR handle and satin nickel lock.

E

Width: Letter size (15-3/4")

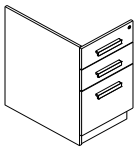

EX

Width: Legal size (18-3/4")

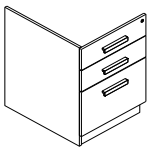

Front Finish

Code	Std	HG
E	645	677
EX	722	754

F

Width: Letter size (15-3/4")

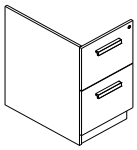

FX

Width: Legal size (18-3/4")

Front Finish

Code	Std	HG
F	628	660
FX	706	737

D

Width: Letter size (15-3/4")

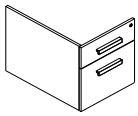

DX

Width: Legal size (18-3/4")

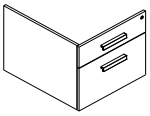

Front Finish

Code	Std	HG
D	472	496
DX	549	574

CBCL30

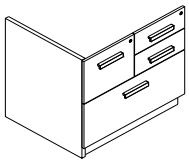

BCCL30

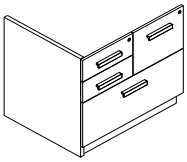

Front Finish

Code	Std	HG
CBCL30	1039	1101
BCCL30	1039	1101

CL30

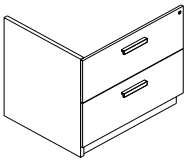

Front Finish

Code	Std	HG
CL30	715	780

How to Order?

Add the pedestal code desired to the desk code on which it has to be installed following the "How to Order" instructions on the desk page.

The specified pedestal depth will be ajusted accordingly to the dimensions of the desk.

Manufacturing Standard: 27-3/8" high, H052CHR handle and satin nickel lock.

MOBE

Width: Letter size (15-3/8")

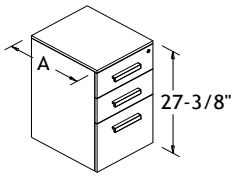

Casters included
Not visible

MOBXE

Width: Legal size (18-3/8")

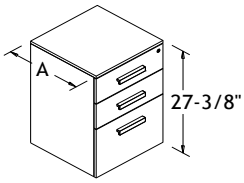

Casters included
Not visible

Front Finish

A Code	Std	HG
18 MOBE	713	745
18 MOBXE	796	834
23 MOBE	713	745
23 MOBXE	796	834

MOBF

Width: Letter size (15-3/8")

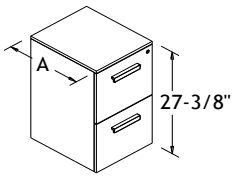

Casters included
Not visible

MOBXF

Width: Legal size (18-3/8")

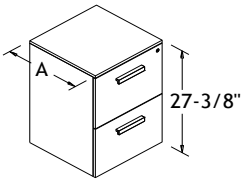

Casters included
Not visible

Front Finish

A Code	Std	HG
18 MOBF	696	728
18 MOBXF	780	818
23 MOBF	696	728
23 MOBXF	780	818

Combination of colors? Specify:

Top

Base

Front

Notes:

Choice of Std or HG color.

How to Order?

		MOBE MOBXE MOBF				
	A	MOBXF		Top	Base	Front
RE	_	_ _	/	_ _	_ _	_ _
Series	Dimensions	Product		Colors		

See the Logiflex Color Chart.

Example **RE 18 MOBE / W W SW**

Storage | Lateral File Cabinet

Manufacturing Standard: H052CHR handle and satin nickel lock.

CL2

Legal size

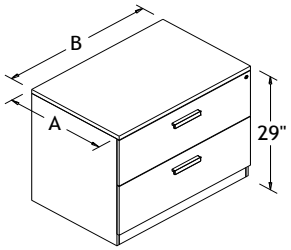

Dimensions		Front Finish	
A	B	Std	HG
24	30	837	905
24	36	904	987

CL3

Legal size

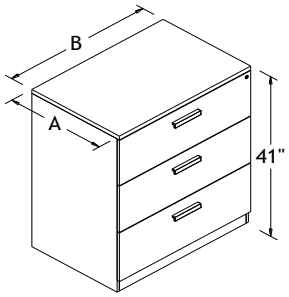

Dimensions		Front Finish	
A	B	Std	HG
24	30	1319	1418
24	36	1379	1499

CL4

Legal size

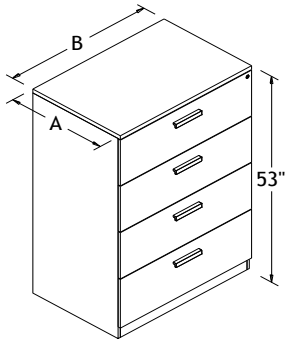

Dimensions		Front Finish	
A	B	Std	HG
24	30	1721	1851
24	36	1795	1952

Combination of colors? Specify:

Top

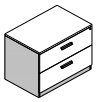

Base

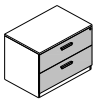

Front

Notes:

Choice of Std or HG color.

How to Order?

		CL2				
		CL3				
	A B	CL4		Top	Base	Front
RE	_ _	_ _	/	_ _	_ _	_ _
Series	Dimensions	Product			Colors	

See the Logiflex Color Chart.

Example **RE 24 36 CL2 / W W SW**

Storage | Multiple Unit

Manufacturing Standard: Open storage with 11" interior height, H052CHR handle and satin nickel lock.

UC1

Legal size

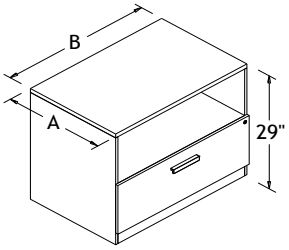

Dimensions		Front Finish	
A	B	Std	HG
24	30	784	816
24	36	818	853

UC2

Legal size

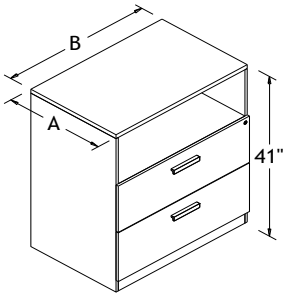

Dimensions		Front Finish	
A	B	Std	HG
24	30	1173	1245
24	36	1235	1321

UC3

Legal size

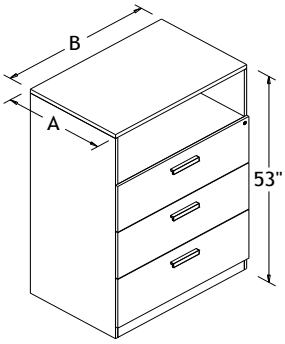

Dimensions		Front Finish	
A	B	Std	HG
24	30	1563	1675
24	36	1652	1790

Combination of colors? Specify:

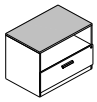

Top

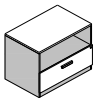

Base

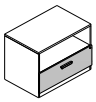

Front

Notes:

Choice of Std or HG color.

How to Order?

		UC1 UC2 UC3				
	A B			Top	Base	Front
RE	_ _	_ _	/	_ _	_ _	_ _
Series	Dimensions	Product			Colors	

See the Logiflex Color Chart.

Example **RE 24 36 UC2 / W W SW**

Manufacturing Standard: H052CHR handle and satin nickel lock for laminate doors. Aluminium handle built into the frame for aluminium doors.

AR

Laminate doors

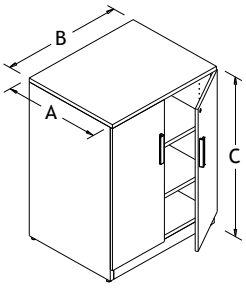

Dimensions	Front Finish	
A B C	Std	HG
24 30 29	746	812
24 36 29	794	873
24 30 41	889	986
24 36 41	935	1052
24 30 53	1029	1157
24 36 53	1078	1232

AR

Aluminum doors

**Lock not available on glass doors*

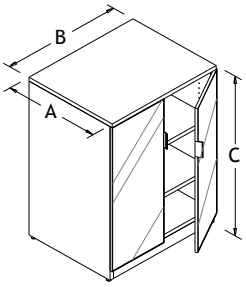

Dimensions	Door Insert			
A B C	PV	PL	PW	V4
24 30 29	1077	1091	1115	1288
24 36 29	1133	1149	1179	1385
24 30 41	1261	1280	1315	1558
24 36 41	1333	1355	1397	1689
24 30 53	1540	1565	1610	1924
24 36 53	1627	1657	1711	2088

**See Logiflex color chart*

Number of shelf for each height

29" = 1 adjustable shelf
41" = 2 adjustable shelves
53" = 3 adjustable shelves

Combination of colors? Specify:

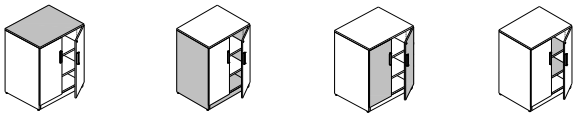

Top | Base | Front* | Shelf

Notes:

**If laminate front: choice of Std or HG color.*

How to Order?

			PV					
			PL					
			PW					
	A B C		V4		Top	Base	Front	Shelf
RE	_ _ _	**AR**	_ _	/	_ _	_ _	_ _	_ _
Series	Dimensions	Product	Insert*		Colors			
			**If aluminum doors*		*See the Logiflex Color Chart.*			

Example **RE 24 36 41 AR / W W SW W**

Storage | Pigeonhole Unit

Manufacturing Standard: 3" interior height in each pigeonhole.

PG

Width: Letter size (15-3/8")

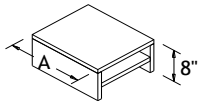

PGX

Width: Legal size (18-3/8")

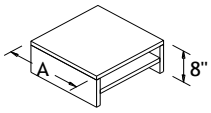

Dimensions

A	Code
16 PG	320
16 PGX	333

Drawer Option

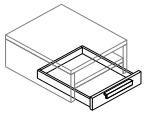

DR	218

PG30

Width: 30"

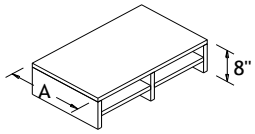

PG36

Width: 36"

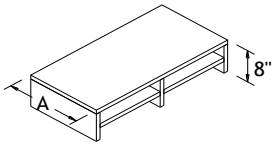

Dimensions

A	Code
16 PG30	552
16 PG36	578

Drawers Option

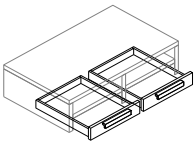

DR	437

Combination of colors? Specify:

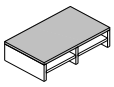
Top

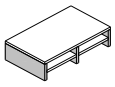
Base

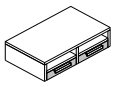
Front*

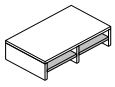
Shelf

Notes:

**If drawer option*

How to Order?

		PG PGX PG30 A PG36	DR		Top	Base	Front	Shelf
RE	_	_ _	[_ _]	/	_ _	_ _	_ _	_ _
Series	Dimensions	Product	Drawer *Option ($)*		Colors *See the Logiflex Color Chart.*			

Example **RE 16 PG36 [DR] / SW SW W-H SW**

Manufacturing Standard: on levellers, 2 fixed shelves.

PGV

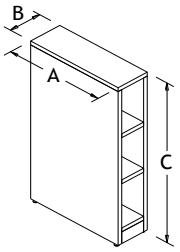

Dimensions

A	B	C
24	08	41
		548

Combination of colors? Specify:

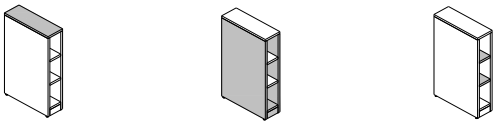

Top Base Shelf

Notes:

How to Order?

	A B C			Top	Base	Front
RE	_ _ _	**PGV**	/	_ _	_ _	_ _
Series	Dimensions	Product		Colors		

See the Logiflex Color Chart.

Example **RE 24 08 41 PGV / SW SW W**

Accessories

Accessories | Lighting

2.4 W LED Starting Kit

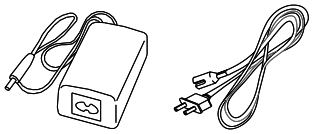

DELALI	66

1 x power supply to connect up to 20' of 2.4 W LED lights;

60 W, 24V dc power supply, 100–240 V, 50/60 Hz, Includes a 39" primary power cord and 38" secondary cord for connection to the LED light.

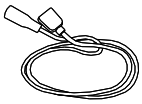

DELFIL	8

1 x 79" power cord.

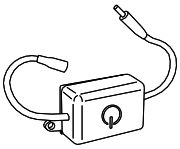

DELGR	19

1 x 4-step touch dimmer.

2.4 W Flexible LED Tape

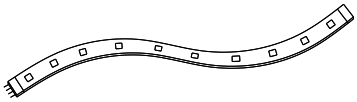

DEL12	15

2.4 W flexible LED tape;
Cool white, self-adhesive, 12" long;
Allow 72 hours once the tape is applied before turning the light on;
Can be directly linked one to the other.

Accessories for 2.4 W Flexible LED Tape

DELT	14

T-joint to link three directions;
Three quick connectors are included.

DELL	11

90° L-joint to use at a corner;
Three quick connectors are included.

DELX	16

X-joint to connect four directions;
Three quick connectors are included.

20" extension	DELRAL20	4
40" extension	DELRAL40	6
79" extension	DELRAL79	8

To connect 12" strips of 2.4W LED tape together;
Three lengths available: 20", 40" or 79".

7.5 W LED Task Light

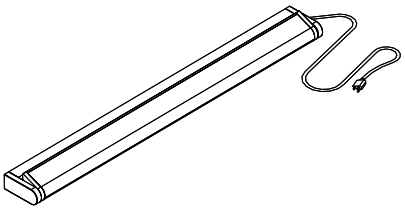

DEL20	167

7.5W LED task light;
Cool white;
20" length;
Satin nickel finish;
180° swivel feature.

Ergonomic Keyboard Tray	KB360M	467

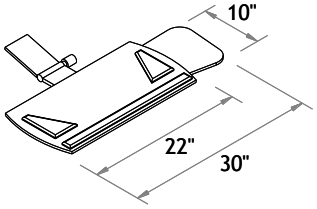

Black plastic articulating ergonomic keyboard tray;
"Lift-N-Lock" spring system (no lever) to adjust height;
Handle for easy tilt adjustment from 10° to 15°;
Retractable and adjustable mouse tray on left or right;
Black gel wrist rest;
360° rotation;
Needs a minimum of 21-1/2" deep clearance under the top.

Keyboard Tray	KBMOD	176

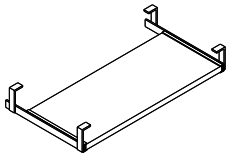

24" to 30" wide;
Specify the width wanted after the code;
Specify the color wanted after the code;
Adjustable height from 1-3/4" to 2-3/4";
Additional 3-1/2" for slides;
Needs a minimum of 16" deep clearance under the top.

Pencil Drawer	TCPM	177

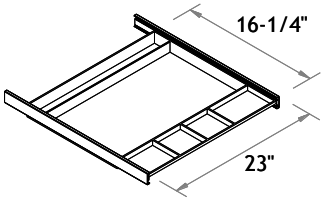

Black plastic sliding drawer with steel ball bearings;
Needs a minimum of 16-1/4" deep clearance under the top.

Sliding CPU Holder	MCPU93	295

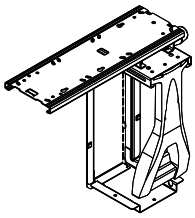

Ratchet style locking storage adjustment;
12" storage;
Adjustable height from 13" to 25";
Adjustable width from 3" to 9";
Maximum capacity of 38 kg (85 lbs);
360° rotation;
Needs a minimum of 17" deep clearance under the top.

Grommet

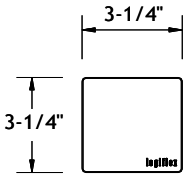

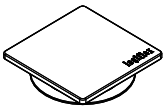

CAPF	20

Square metal grommet with engraved Logiflex logo;
Satin nickel finish;
2-1/2" hole in the top.

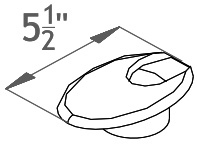

HAPF	14

Oval plastic grommet;
Satin nickel finish;
3-1/2" hole in the top.

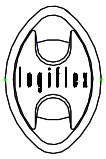

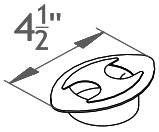

ELPF	6

Elliptic grommet with Logiflex logo;
Black plastic finish;
2-1/2" hole in the top.

Handle

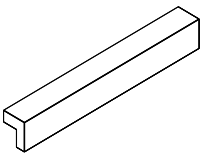

H052CHR	16

7" metal handle;
6-9/32" (159.544 mm) center-to-center drill holes;
Chrome finish;
Consult the Logiflex Color Chart to see the complete list of handles offered.

Lock

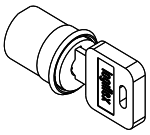

LKSNF	22	*Drawer lock, sold separately*
LKSNP	22	*Door lock, sold separately*

Satin nickel finish;
To order a lock separately, specify whether it's a drawer lock (LKSNF) or a door lock (LKSNP).

MAKE A STATEMENT

A client's first impression when they visit your company may affirm their decision to choose your product or service.

This makes it important to personalize your reception desk to make it distinctly you. From minimalist geometry to curves and curls, Logiflex's reception units will highlight the individuality of your company, projecting a modern esthetic without sacrificing functionality.

LOGICAL AND FLEXIBLE

As our product line is constantly evolving and expanding, we recommand that you visit logiflex.ca for updates

.

logiflex

1235 St-Roch N., Sherbrooke QC J1N 0H2 Canada
T : 1.877.864.9323 | F : 1.800.474.7830 | logiflex.ca

GREENGUARD
PRODUCT CERTIFIED FOR LOW CHEMICAL EMISSIONS
UL.COM/GG
UL 2818