Russwood
LIBRARY FURNITURE

Helping you turn information into education.™

Table of Contents and General Specifications on the Following Pages

Table of Contents

Getting Started With Russwood.

GETTING STARTING
General Specifications....3-5
Warranty Information....6-8
Placing an order....9
General Information about Edgeband Details....10-11
CIRCULATION DESKS
Traditional Series *(edgeband details pg. 38)*....13-38
Ultima Series *(edgeband details pg. 65)*....39-66
ModuFlex Series *(edgeband details pg. 92)*....67-92
Orbis Series *(edgeband details pg. 93)*....93-106
LEG BASED FURNITURE
Providence Series: General Specifications....107
Reading Tables....108-111
Edgeband Details for Reading Tables....112
Computer Tables
24”W Flat Screen Tables....113-114
30”W Computer Tables....115-116
36”W Computer Tables....117-118
Modular Computer Tables....120-121
Edgeband Details for Computer Tables....122
Carrels - Study and Computer....123-126
Display Furniture....127-130
Edge Details for Carrels, Carrel Tables and Display Furniture....131
PANEL BASED FURNITURE
Elite Series: General Specifications....133
Edge Details for Elite Series....135
Reading Tables....136-137
Computer Tables
24”W Flat Screen Tables....139-144
30”W Computer Tables....145-150
36”W Computer Tables....151-152
Computer Stations....153-157
Computer Counters....158
Carrels - Study and Computer....159-160
Display Units....161-164
SHELVING
Stately Series General Specifications....165
Ordering Shelving Options (continuous top, laminate tops, etc)....166-167
Edgeband Details for Shelving with Continuous Tops....168-169
Single & Double Face Standard Shelving....170-171
Picturebook Shelving....172-173
Periodical & Glass Door & End of Range Shelving....174-175
Backs & Partitions, Newspaper File Insert....176
Making Shelving Mobile, Shelving Accessories, Extra Shelves....177-178
MOBILE UNITS General Specifications....179
Laptop Computer Cupboard....180
Book Trucks....181
Cupboard, Open Shelf, File Drawer, Printer Stand....182-183
OFFICE FURNITURE - Regent Series General Specifications *(edge details pg.193)*....185-194
SEATING....195-204
ACCESSORIES and finish color swatches....205-215

Russwood Library Furniture is a family owned business established in 1976 in Raleigh, North Carolina in Russell Carroll Sr.'s workshop. Two business principles have always been at the heart of our company:
1. An uncompromising commitment to building and shipping only quality products.
2. An unusual commitment to flexibility in meeting your unique furniture or fixture needs.

An uncompromising commitment to making quality products. We were founded on a commitment to only ship quality products. Therefore, RCM employs a diverse workforce with each person committed to our long standing commitment to "make it as though it was your own" quality. We believe in and operate under the team concept which assures that the customer benefits from the even the smallest innovation in process or design. Our commitment to quality also compels us to use and seek out the industry's state-of-the-art woodworking machinery, EPA-approved finishing equipment, and manufacturing processes.

An unusual commitment to flexibility. Although we offer a full line of standard furniture products and finishes, we also are passionate about rising to the challenge of designing and building custom furniture and fixtures or finding that just right material or component so that your Library looks and functions exactly as you have envisioned.

General Material & Component Specifications

INTENT

This specification section covers all the standard library products produced by Russwood Library Furniture and is intended to define such areas as methods of construction, standard and optional wood and plastic-surfacing materials, hardware, finishing methods, limited warranty and quality assurance tests.

All materials, construction methods, assembly, and finishing of our product line will be of a quality equal to or exceeding the generally associated with professional standards of the institutional library furniture industry. All joints will reflect those used in standard woodworking practice including but not limited to dovetail, spline, rabbet, double dowels and mortise and tenon.

The following are general specifications as of January 2004. RUSSWOOD reserves the right to modify design, construction methods and/or non-essential materials without notice. Any such changes that materially affect your order will be communicated at the time Russwood Library Furniture is made aware of your intent to utilize our products. Refer to specifications page at the beginning of each section heading for product-specific information not covered in the following general specifications.

MATERIALS

Solid Wood - All solid wood used will be selected from Northern-grown, structurally sound stock, free from defects such as visible splits, knots, checks or decay. The wood shall be properly kiln-dried and conditioned to a moisture content of 5-7%. Exposed solid wood will be selected at the same time for uniformity of grain and color. Unexposed solid wood parts may be of suitable hardwoods. All glued-up slats will be free from any type joint and made up of random slats with widths no less than 1" and no more than 4".

Wood Veneer - The wood veneer species will be select, plain sliced veneers, carefully selected for uniformity of grain and color so as to eliminate wild grain patterns and gross figures. Wide variations of patterns between companion pieces will not be allowed. The finished appearance of all exposed veneer surfaces shall be free from any detectable telegraphing of substrate, sand through or adhesive bleed through. Unexposed wood veneers will be of suitable species of hardwood.

Veneer Plywood - All veneer plywood will be of cross-banded construction using odd numbers of plies for added stability, assembled with a moisture-resistant resin adhesive. Internal plies will be sound and free from structural defect. Face veneers will be selected and compared for uniformity of grain and color on either one or both sides, as standard or custom design requires.

Edgeband - Exposed plywood parts will be edgebanded using select solid wood of the same species as the veneer. A minimum thickness for any solid wood edgeband shall be 1/4”. This applies to all wood or veneer exterior construction.

Core Material - A minimum 5-ply or 7-ply lumber cores will be of good grade core stock in random widths of 1" to 4". Wood strips will be free of knots or other defects, run the full length of the panel (the longest dimension), with no joints. Veneer cores will be made of hardwood and bonded with a moisture-resistant adhesive. Particleboard cores will be made of wood chips, bonded with a moisture-resistant adhesive to achieve a minimum of 45 lbs/cu.ft.

Plastic Laminate - Laminate used for all work surfaces and shelving tops will be .050" high-pressure plastic laminate and will comply with the requirements of NEMA LD-3, grade GP-50. Balancing sheet will be (.02). Wood-grained laminates will be matched against wood parts for uniformity of grain and color.

We recommend Nevamar laminates. Visit their web site at www.nevamar.com
Click on “product catalog” choose “high pressure decorative laminates” from the drop down window. View color and design samples from the “solids” - “patterns” - “matrix” - “hallmark” or “woodgrains” collections.

HARDWARE - Trim hardware will be of such a design and quality to meet and/or exceed the requirement of institutional furniture and equipment. Trim hardware finish will coordinate with the decor of the furniture. Metal parts will be chrome plated, or coated with epoxy or acrylic enamel. Construction hardware (i.e. fasteners, hinges, glides, casters, drawer pulls, locks and drawer stops) will meet and/or exceed the operational requirements for institutional furniture. Two keys will be furnished with each lock. Floor glides will be adjustable with surfaces contacting the floor being manufactured from a nonrusting material.

Joinery - All joints will reflect those used in professional woodworking including dovetail, spline, rabbet, double dowels, mortise and tenon or cleat reinforced. Including but not limited to glueing and/or screwing or nailing.

FINISH
All exposed surfaces are inspected and hand-sanded to remove machine marks, excess glue, scratches, and/or other imperfections prior to the finishing process.

Spray-on finish: Each part goes through a six-step finishing process, beginning with application of color and ending with two (2) applications of pre-catalyzed lacquer. The top coat will be highly resistant to abrasion, scuffing, sunlight, boiling water, alcohol, nail-polish remover, mustard, ketchup, tea, ink, soft drinks and juices. The components of assembled items will have a matching finish where exposed. Finish colors shall be manufacturer's standard colors unless otherwise specified.

UV finish: Each part goes through a six-step finishing process, beginning with application of color and ending with two (2) applications of Ultra-violet light cured, solid resin clear coat. The top coat will be highly resistant to abrasion, scuffing, sunlight, boiling water, alcohol, nail-polish remover, mustard, ketchup, tea, ink, soft drinks and juices. The components of assembled items will have a matching finish where exposed. Finish colors shall be manufacturer's standard colors unless otherwise

Engineer Certified Wood Finish Test Results
(1) - A new nickel held at a 45 degree angle is pulled across the finished surface parallel to the grain with no cracking, chipping or removal of finish; **NO EFFECT ON FINISH**
(2) - Fingernail polish is brushed on and allowed to thoroughly dry and then is removed with fingernail polish remover with no effect on the finish; **NO EFFECT ON FINISH**
(3) - Three (3) drops of fingernail polish remover shall be dropped on the finished surface and let stand for two (2) minutes and blotted off. There may be swelling of finish which recovers when dry (1 hour); **NO EFFECT ON FINISH**
(4) - Wet a pad of soft cloth with fingernail polish remover and make five (5) firm, single swipes across the finish with no effect on the finish; **NO EFFECT ON FINISH**

Field tests for spot checking the finish for chemical and physical resistance may be arranged by purchaser or authorized representative. A minimum of thirty (30) days from application is required for aging before testing

GENERAL LIMITED FIVE YEAR WARRANTY

Russwood Library Furniture (RLF) guarantees our products will be free from defect in materials and craftsmanship for a period of 5 years from date the Customer receives the order. Customer authorized personnel must inspect and make any warranty or shortage claims of new product shipments within 15 days of receipt of order or consider shipment as accepted and complete. This warranty will begin on the date of acceptance by the Customer or its authorized Agent.

All warranty claims must be made in writing to (RLF) immediately upon discovery. Customer should only consider written acceptance of a warranty claim from an authorized (RLF) Officer as valid. Customer agrees to fully cooperate with (RLF) and/or its authorized Dealer or Agent in providing verbal and/or written descriptions and/or digital pictures to assist (RLF) in accessing any warranty claim and if needed - to efficiently prepare for warranty work.

This warranty applies to furniture subjected to normal intended use, wear and environment as deemed by (RLF). Any such (RLF) verified warranty claim will be repaired or replaced at RLF's discretion, at (RLF) expense, and by (RLF) authorized service personnel.

Any warranty work made during the first year will be - under normal circumstances - made on-site by authorized (RLF) service personnel. Thereafter, any warranty work will be made in our Raleigh, NC facility with warranted units being prepared for shipping by the Customer according to (RLF) written packing and shipping instructions at the time the written warranty claim is received by (RLF).

Any alteration, addition and/or modification to our product or failure to properly maintain and care for the finish and/or hardware components according to commonly accepted maintenance and care practices; or if uncertain - to notify (RLF) in a timely manner for general or specific maintenance or care instructions; or improper installation by customer provided installers shall nullify this warranty. This warranty is not transferable.

EXTENDED LIMITED WARRANTY FOR RUSSWOOD TABLE LEG MOUNTING SYSTEM

Russwood Library Furniture guarantees that the table leg mounting system used in our Providence Series study and computer tables will be free from defect in materials and craftsmanship for the life of the table. Failure of our mounting system to securely hold the leg to the table under normal use and wear as deemed by RLF will constitute grounds to make a claim against this warranty. All other terms and conditions contained within the General Limited Warranty also apply to this extended limited warranty.

General Finish Care and Furniture Maintenance

It is strongly advised that written records of regular maintenance efforts and minor repair records be kept in order to maintain product warranty.

To properly maintain the Product Warranty and industrial standards and performance of Russwood Library Furniture Products the following should be noted and followed whenever needed and at frequent intervals.

At the earliest indication of soiling or marking all wood finishes and plastic laminate surfaces and upholstered fabrics should only be cleaned with commonly known and available mild detergents and lukewarm water with a clean soft absorbent cloth or paper product made for such purposes. Moistened surfaces should be allowed to remain wet only for the time necessary to clean the surface. All surfaces should be completely dried immediately after cleaning.

All hardware such as, but not limited to, hinges, drawer glides, door pulls, wheels, locks, levelers, brackets, closures, anchors, pins, grommets, etc., should be used in its intended manner and inspected at regular intervals. Any wear that in any way affects high performance should be immediately noted. Minor repairs such as tightening a screw or adjusting an adjustable glide or hinge should be made immediately. No repair should be attempted that may void the Warranty. Russwood can be contacted at any time for repair or care advice and in limited cases instructions for repair.

All laminate edges and glued edgebands on furniture panels such as but not limited to shelving uprights, circulation desk units, table or carrel panels and all laminate work surfaces should be regularly inspected for proper adhesion. Any lack of adhesion should be immediately noted and RLF contacted. No repair should be attempted that may void the Warranty. Russwood can be contacted at any time for repair or care advice and in limited cases instructions for repair.

Once installed by approved RLF installers, circulation desk units should only be unbolted and rearranged by authorized RLF personnel in order to maintain your Product Warranty.

Russwood Providence Series tables carry an additional warranty. However, every effort should be made to move a table by lifting it rather than dragging it in order to lessen or eliminate stress on the leg assembly.

Under no circumstances should potted plants or any other moisture prone container be placed on a wood surface. Any resulting damage will void the Product Warranty. Any placement of potted plants on laminate surfaces should be carefully monitored so as not to cause residual damage to wood surfaces or in any other way void the Product Warranty.

Every effort should be made to avoid placing any items, containers, or equipment on or next to wood or laminate surfaces that might immediately or eventually scrape, scratch, dent, rub or in any other way damage the finish. Placing or arranging furniture with ample “walk around” space will minimize normal wear on wood and laminate surfaces.

Russwood Ordering Policy.

RLF must have the following information to enter an order. RLF can not schedule an incomplete order for production until all the information is received to completely process the order.

INFORMATION REQUIRED FOR STANDARD UNIT ORDERS

1. All orders must have an authorized PO # at the time of placement.
2. RLF catalog or bid unit number and name of each piece of furniture or accessory to be ordered.
3. Specify the unit price AND extended quantity price - if priced from a BID - include Bid #.
3. Specify wood species. Species other than red oak incur an additional up-charge.
4. Specify the edge detail for each unit on your order using RLF catalog numbers.
5. Specify the finish color of the furniture using RLF catalog numbers.
6. Specify laminate color using laminate manufacturer's item # and color description.
7. Specify Dealer Salesperson contact name, contact numbers: phone, cell, fax, and e-mail.
8. Specify a complete street shipping address and customer mandated tagging information.
9. Specify a *requested ship date*. Any date less than 45 days from order date requires written pre-approval from RLF customer service.
10. Include with the order any drawings or detailed descriptions - any such drawings received after 5 days of order entry may constitute a changed order and be subject to the corresponding fee.

ADDITIONAL INFORMATION REQUIRED FOR ORDERING MODIFIED STANDARD UNITS

(Modifications are limited to size dimensions or standard hardware components of a standard unit or accessory - and may increase the production time necessary for the whole order)

1. RCM catalog number and name of the piece that is to be modified. *Note: Do not alter the original catalog number of the piece to be modified.*
2. Add the suffix MOD to your catalog number to denote that the piece of furniture is modified.
3. Give the new dimension of each unit the modification applies to and specify the aspect (height, width, depth) to which the new dimension applies.
4. Give the specific modification to each hardware component for each unit. (i.e. - brass finish on drawer locks rather than nickel finish)

ADDITIONAL INFORMATION REQUIRED FOR ORDERING CUSTOM UNITS

(Ship dates for custom units can not be given until RLF has complete design details and customer approvals in hand. Custom units that are part of an order of standard units may affect the shipping date of the total order.)

1. The name by which the custom unit will be referred to by the customer.
2. A detailed and dimensioned drawing or sketch from which the unit can be engineered. (RFL can create a drawing for a pre-approved hourly fee ($50 min.). RLF engineered drawings must be "customer/customer agent approved" before production can be scheduled.)

Planning For & Ordering Edgeband

See Page 2 for location of specific edgebands offered for each Series or furniture type.

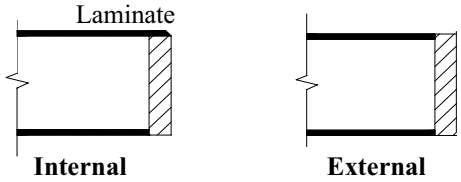

When choosing an edgeband for continuous tops you can either have the edgeband placed internally (the edgeband captured by the laminate) or externally (the laminate captured by the edge band)

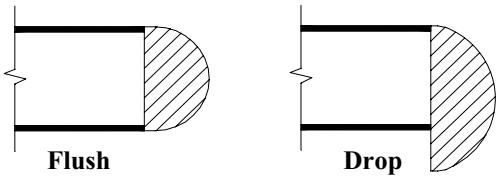

When choosing an edgeband for continuous tops you can either have the edgeband placed flush with the bottom of the top or dropped below the bottom.

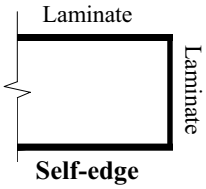

When choosing an edgeband for continuous tops you can have a laminate edgeband matching the laminate top (self-edge). All edges and corners are finished for maximum "bump" protection.

Edgeband Options for Top Thicknesses

(Note: top thickness is specified by unit)

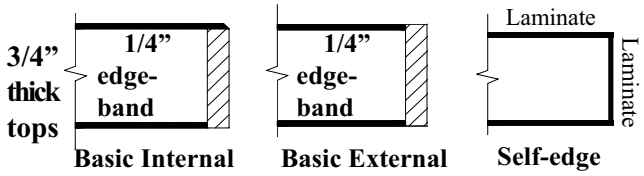

3/4" thick tops are only offered with a BASIC 1/4"T solid wood internal or eternal edgeband or the matching laminate (self-edge.)

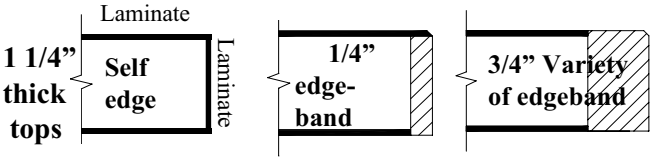

1-1/4" thick tops can be constructed with a laminated (self edge) OR 1/4"T Internal BASIC solid wood edgeband OR 3/4"T solid wood with a variety of internal or external edgeband details.

Edgeband Details.

All Russwood units using veneer plywood receive a edgeband on all exposed edges. Familiarize yourself with these standard edgeband shapes and terms as your order may require that you choose one of these edgebands.

See Table of Contents for location of specific edgebands for each Series or furniture type.

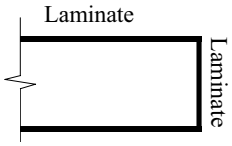

Self Edge
3/4" thick top OR
1-1/4" thick top

3/4" thick top (Internal)
Basic Flush

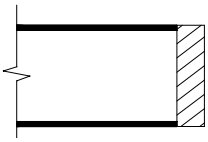

3/4" thick top (External)
Basic Flush External

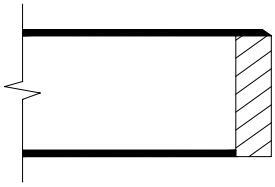

1 1/4" thick top (Internal)
Basic Flush

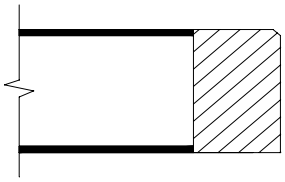

1 1/4" thick top (External)
Montana Flush

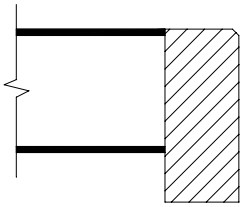

1 1/4" thick top (External)
Montana Drop

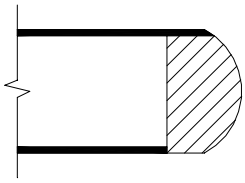

1 1/4" thick top (Internal)
Shallow Bullnose Flush

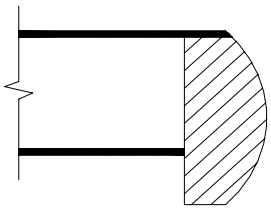

1 1/4" thick top (Internal)
Shallow Bullnose Drop

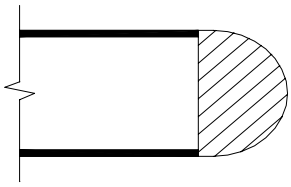

1 1/4" thick top (External)
Bullnose Flush

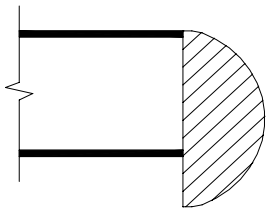

1 1/4" thick top (External)
Bullnose Drop

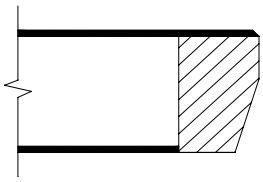

1 1/4" thick top (Internal)
Premier Flush

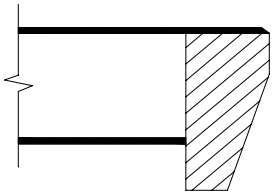

1 1/4" thick top (Internal)
Premier Drop

GENERAL SPECIFICATIONS

The ***Traditional Series*** circulation desk is designed to provide the maximum amount of uninterrupted continuous work surface.

CONSTRUCTION AND MATERIALS

Each desk unit will be constructed from 3/4" thick, 7-ply veneer core plywood, with plain-sliced face veneers. Front panels will be matched for color and grain characteristics to give the appearance of a continuous front across the entire desk arrangement. All visible panel edges will be banded with 1/4" thick eased matching hardwood. To further enhance the continuous look, each unit is constructed with a 4" high x 3" deep, laminate toe space.

All desk units and finished end panels are separated by a 1/4"T black reveal panel, inset 3/4" from each desk face. Desk units will be connected using four 5/16"-18 connector bolt assemblies, which pass through each unit end panel and reveal to fasten each unit together.

Each terminating end of a given desk arrangement is supplied with a finished end panel which will be connected to the desk with hidden inserts and connector bolts. Finished end panels will also receive an ebonized laminate toe kick to anchor the continuous appeal.

All doors, adjustable shelves, and drawer fronts will be constructed from 3/4" thick, 7-ply veneer core plywood with plain-sliced veneers. Shelves will be on no greater than 2" centers supported by 1/4" shelf pins. All edges will be banded with 1/4" thick eased matching hardwood.

Each drawer box will be of English dovetail design and will be constructed using 1/2" thick solid northern grown red oak with a 1/4" thick veneer core plywood bottom. Box drawers will be 14-7/8"W x 18"D x 5-1/4"H. File drawers will be 14-7/8"W x 18"D x 10-1/2"H. Double width drawers will be 31-1/2"W x 18"D x 5-1/4"H.

Each continuous top is custom made to fit the desired desk arrangement. All tops will be fabricated in the longest lengths possible (12-foot maximum) to eliminate unnecessary seams in the completed top. Tops will be joined at all seams with solid wood biscuits and tight-joint fasteners, then screw-attached to the desk from the underside.

Continuous tops will be 1-1/4" thick and will be constructed from 1-1/8" thick particleboard with .050" high-pressure laminate on the face with .020" backer sheet on the underside of the top. The staff side of the top will be internally banded with 1/4" thick solid red oak edgeband, and will overhang the face of the end panel a total of 1-1/8". The patron side of the top will be banded per customer specification, and will overhang the face of the front panel 1-1/8". **SEE PAGE 38 FOR EDGE DETAILS**

HARDWARE

All drawers will be constructed to an overall depth of 18" and will be mounted on 18" full-extension, ball bearing glides with a load rating of 100 pounds per pair. Desks where locks are provided or ordered, locks will be keyed identically.

All doors will be hung with 110-degree opening, self-closing Salice hinges (180-degree available if specified) and Salice Smove (tm) door cushion. Pulls for both doors and drawers will be satin chrome 5/16" diameter wire pulls. Substitutions may be made at customer's request. (Up-charge may apply)

File drawers will be supplied with installed file racks for both letter and legal file folders.

All units are supplied with 3" diameter end panel grommets and J-channel wire manager to facilitate concealed wire passage between units in a range. Units with dropped work surfaces will be supplied with 3" grommets through the work surface.

FINISH: See page 5 for finish specifications.

Visit our website at ***www.russwood.net***

CDT-1

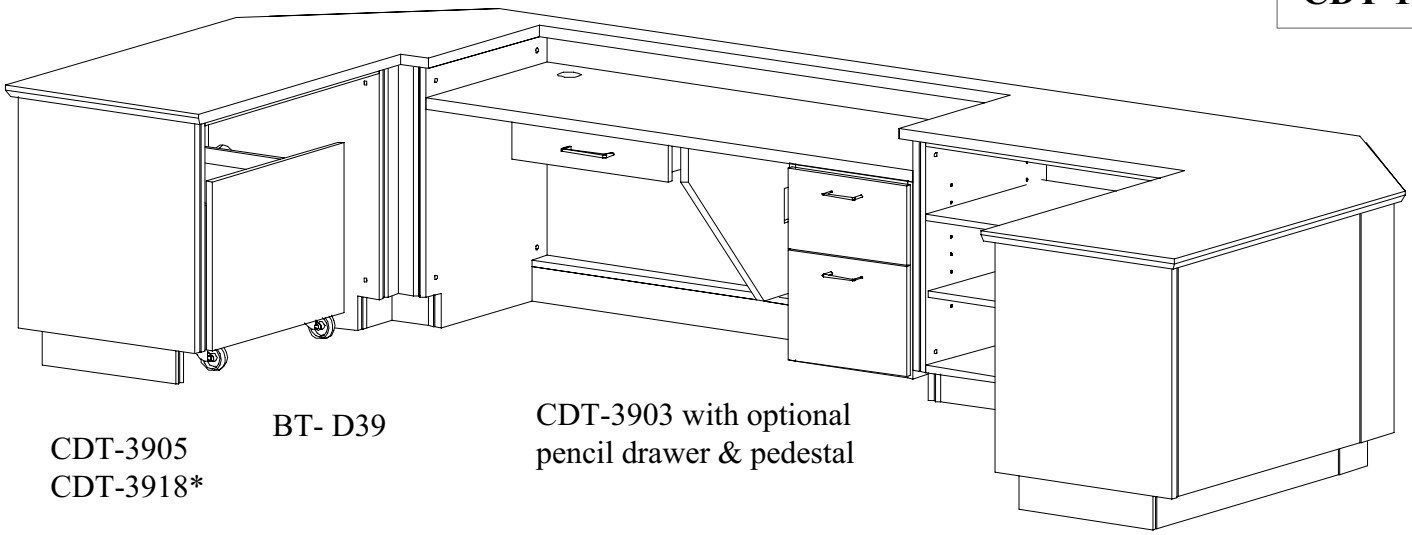

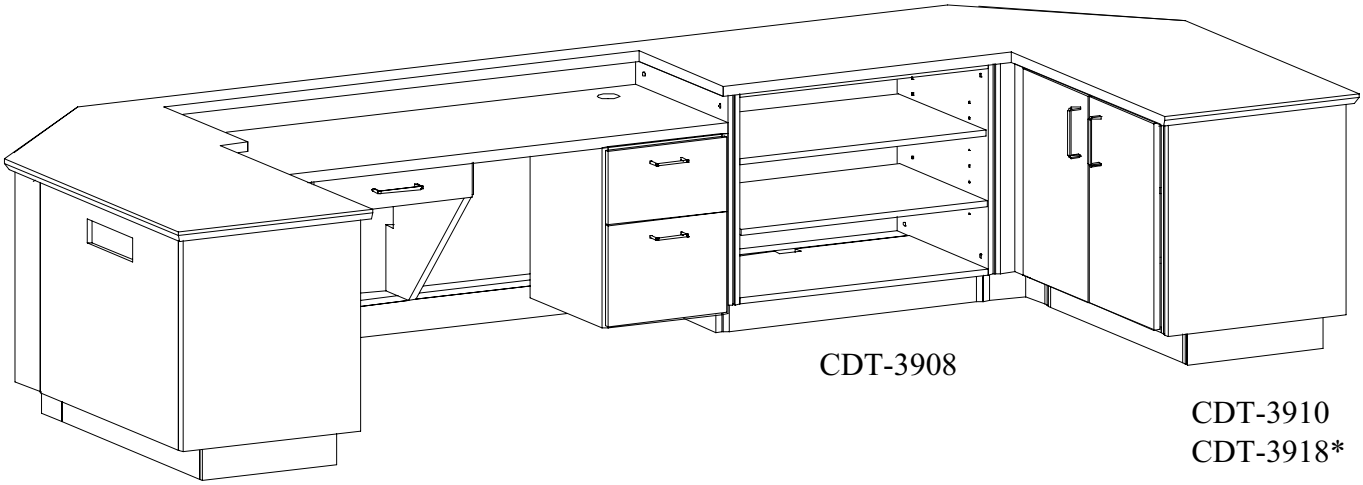

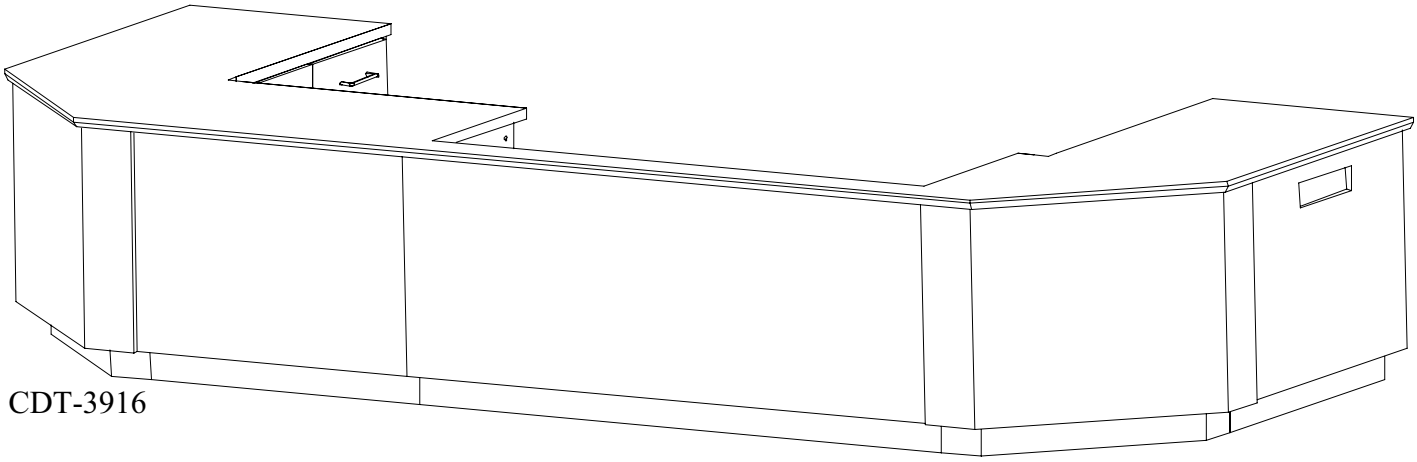

*finished end-panel

CDT-2

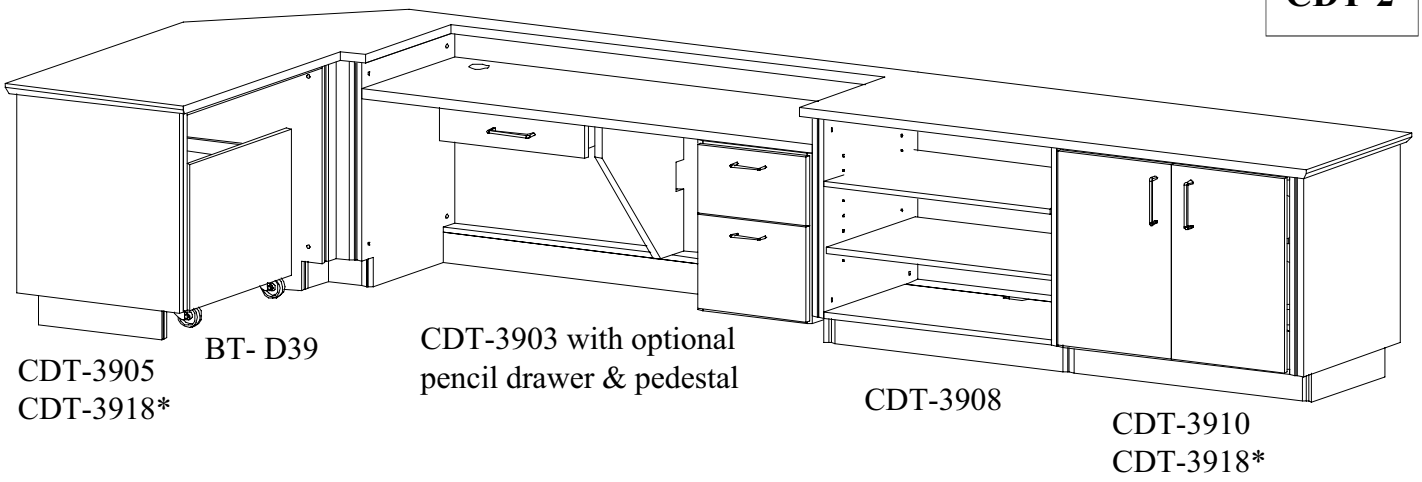

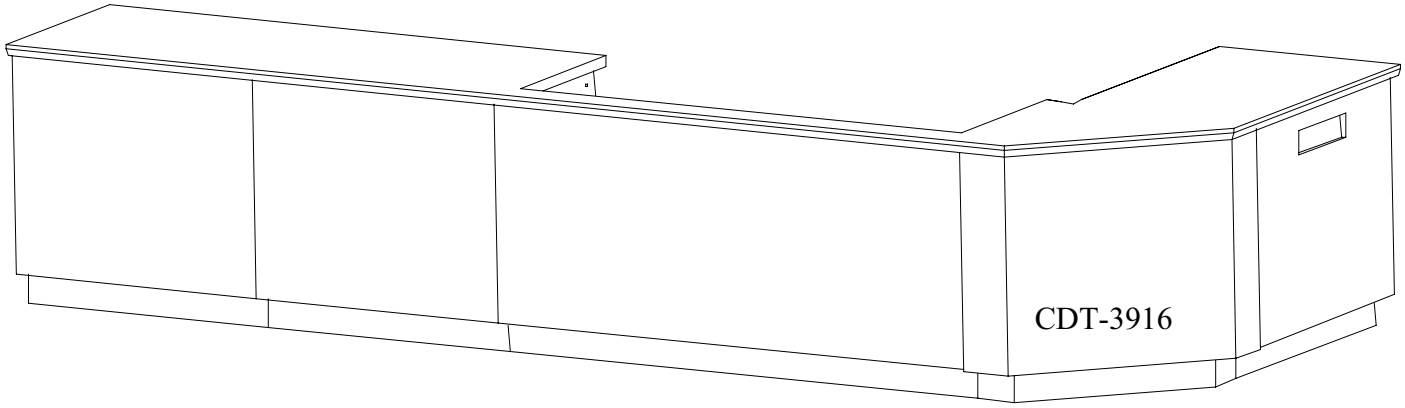

The *Traditional Series* circulation desks feature a work surface that is constructed in one continuous piece & permanently fastened to the service units.

The service units shown are featured as our most popular units in this series. These popular units are a book return with depressible truck, a corner unit, a double patron unit with an optional pencil drawer and pedestal, an open shelf unit, and a cupboard unit. When arranged the desks form either in a “U” shape or a “L” shape depending on the total number of service units ordered. If you desire a service unit that is not shown here then you can choose from the many others that follow. Even though tops are fixed - service units (except the patron desks) of the same size can unbolted, rearranged and re-bolted.

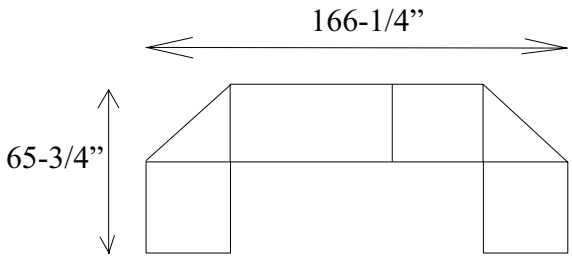

Extended depth footprint 169-3/4”L x 68-3/4”W

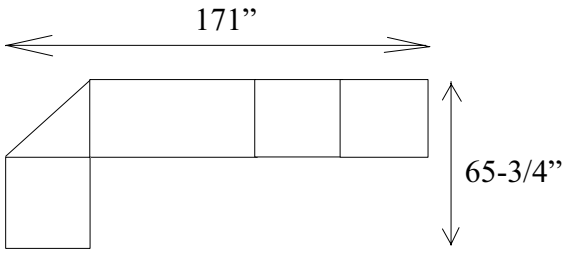

Extended depth footprint 174-3/4”L x 68-3/4”W

For the ultimate in versatility...

Combine any of our desk units in this series with any of the following mobile units. Combining mobile units and desk units allows you to change the function of any of your circulation desk work stations at a moment's notice. Units with permanent features can be used with desks that use mobile units.

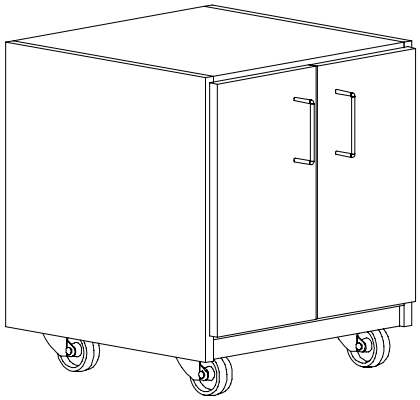

Mobile Cupboard Unit

This unit is supplied with two (2) shelves for the adult height and one (1) shelf for the elementary height. The back is supplied with grommets for wire management.

Catalog #	Description	Height"	Width"	Depth"	Price
A-27	Elementary height	26	25	20	
A-28	Adult height	36	25	20	

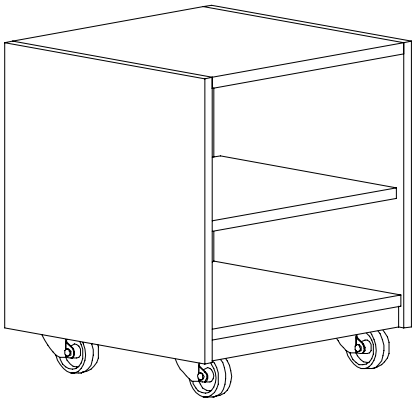

Mobile Open Shelf Unit

This unit is supplied with two (2) shelves for the adult height and one (1) shelf for the elementary height. The back is supplied with grommets for wire management.

Catalog #	Description	Height"	Width"	Depth"	Price
A-29	Elementary height	26	25	20	
A-30	Adult height	30	25	20	

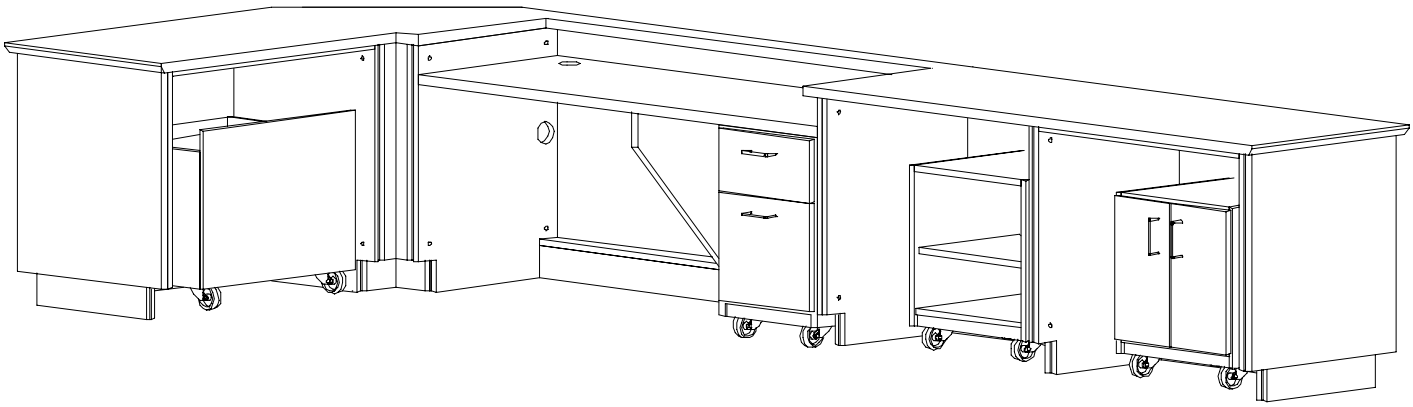

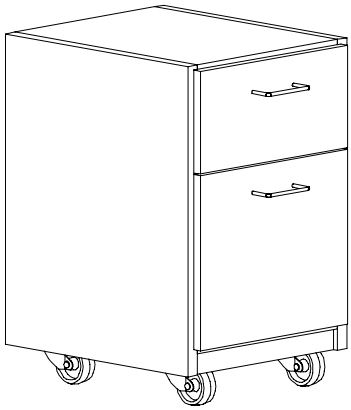

Mobile File Cabinet

The elementary height unit is supplied with (1) box and (1) file drawer. The intermediate height unit is supplied with (2) boxes and (1) file. The adult height unit is supplied with (1) box drawer and (2) file drawers. The box drawer is14-7/8”W x 18”D x 5-1/4”H. The file drawer is 14-7/8”W x 18”D x 10-1/2”H. The unit is counterbalanced so that it does not tip over under normal use when the file drawer is opened.

Catalog #	Description	Height"	Width"	Depth"	Price
A-23	Elementary height	25	17	19	
A-23A	Intermediate height	31	17	19	
A-23B	Adult height	36	17	19	

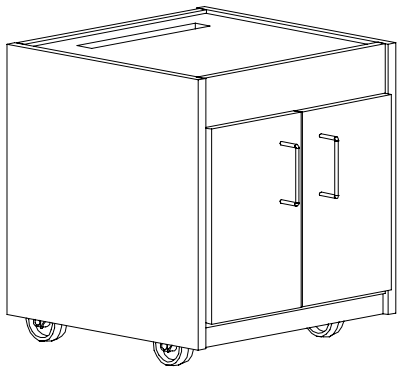

Mobile Printer Stand

Unit end panels are constructed of 1”T red oak veneer plywood. All other components are constructed with 3/4”T red oak veneer plywood. Unit is supplied with one (1) adjustable shelf and one (1) base shelf. The shelf is 22-134”W x 17”D x 3/4”T. Adj. Shelf is notched for wiring management. All exposed edges are edgebanded with 1/4”T solid red oak. Doors have satin chrome pulls. The bottom is supplied with a grommet for wire management. Wheels are 210 lbs rated ball-bearing swivel casters. The top is removable and is slotted for printer paper.

Catalog #	Description	Height"	Width"	Depth"	Price
A-24	Universal height	21	21	19	

Traditional Series Trim Packages

These trim packages for the Traditional Series give you a wide range of design and cost options.

Ordering a trim package is simple.
1. Select the Traditional service units you desire in your circulation desk arrangement.
2. Determine the total number of single width or small corner units, multiply by selected package upcharge.
3. Determine the total number of double or larger corner units, multiply by selected package upcharge.
4. Add the total single and double widths to determine the total trim package upcharge.

NOTE: The Quantum and Regal packages are not available on radius corner desk or service units.

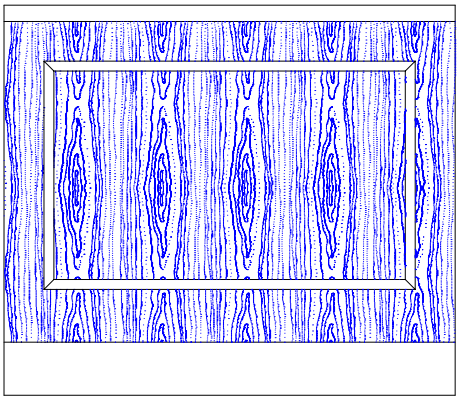

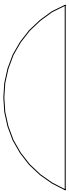

Quadrum TM

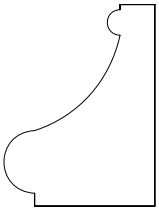

Regal TM

The Quadrum and Regal packages can be applied to any flat modesty panel or end panel. The treatment forms a rectangle that is about 3" from all edges. The trim package comes with the choice of two moldings. The edge details of these two moldings can be seen below. On 36"L circulation desks the modesty panels receives one such rectangle while a 72"L unit would receive two such rectangles NOTE: The Quadrum and Regal packages are not available on radiused desk or corner units.

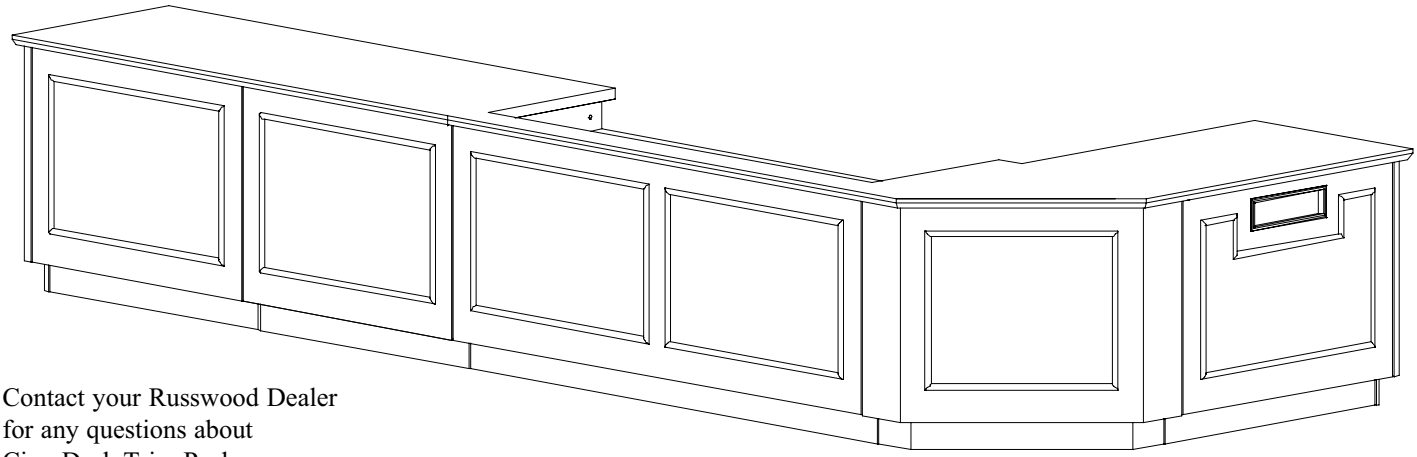

Contact your Russwood Dealer
for any questions about
Circ. Desk Trim Packages.

Catalog #	Description	Single W" unit upcharge	Double "W unit upcharge $
QDT-1	Quadrum Trim Package for Traditional Series		
RGT-1	Regal Trim Package for Traditional Series		
	To figure upcharge:	# Simgle units (x) upcharge per unit =	
		# Double units (x) upcharge per unit = + _____	
		Total upcharge $	

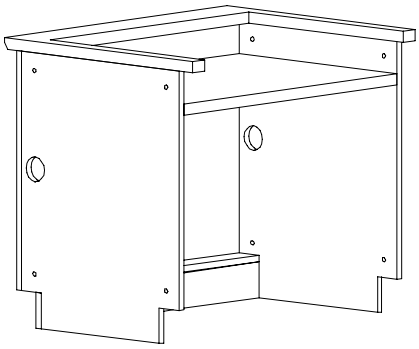

Patron Desk Unit

Each unit will have a recessed work surface measuring 34-1/2"W x 24”D, fastened with metal cleats and screws (work surface height of 29"). Work surface grommet, centered along length unless otherwise specified. The exposed edge of the recessed work surface will have a 1/4” thick, solid wood, internal edgeband. Extended depth units have work surface measuring 34-1/2”W x 27”D.

Catalog #	Description	Height"	Width"	Depth"	Price
CDT-3202	Elementary height, standard depth	32	36	27	
CDT-3202E	Elemntary height, extended depth	32	36	30	
CDT-3902	Adult height, standard depth	39	36	27	
CDT-3902E	Adult height, extended depth	39	36	30	

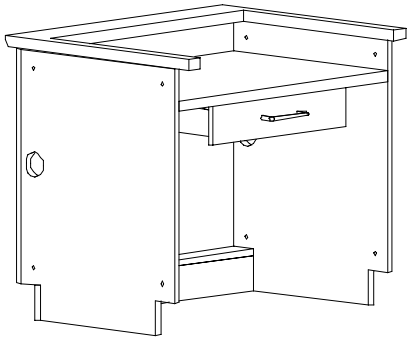

Patron Desk Unit with Pencil Drawer

Each unit will have a recessed work surface measuring 34-1/2W x 24"D, fastened with metal cleats and screws to provide an adult work surface height of 29". This unit is supplied. This unit is supplied with a work surface grommet, centered along the width unless otherwise specified. The pencil drawer is 18"W x 5-1/4"H x 14-7/8"D and centered under the work surface. Extended depth units will have a work surface measuring 34-1/2"W x 27"D.

Catalog #	Description	Height"	Width"	Depth"	Price
CDT-32353	Elementary height, standard depth	32	36	27	
CDT-3235E	Elemntary height, extended depth	32	36	30	
CDT-3935	Adult height, standard depth	39	36	27	
CDT-3935E	Adult height, extended depth	39	36	30	

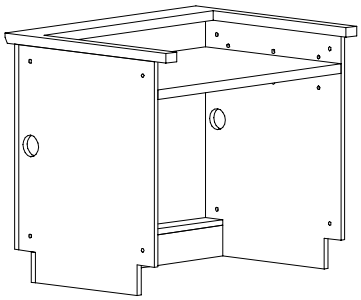

Patron Desk with adjustable work surface

Each unit will have a recessed work surface measuring 34-1/2"W x 24”D, fastened with metal cleats and threaded inserts. The work surface is adjustable to accommodate a variety of possible needs. On the adult height unit, the work surface possibilities are 27”H, 29”H, and 32”H. On the elementary height unit, the work surface possibilities are 27”H, and 29”H.

Catalog #	Description	Height"	Width"	Depth"	Price
CDT-3248	Elementary height, standard depth	32	36	27	
CDT-3248E	Elementary height, extended depth	32	36	30	
CDT-3948	Adult height, standard depth	39	36	27	
CDT-3948E	Adult height, extended depth	39	36	30	

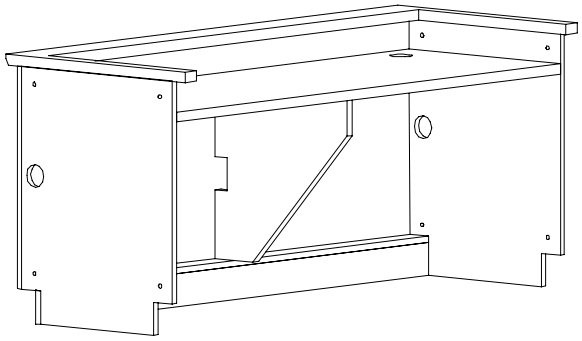

Double-Width Patron Desk Unit

Each unit will have a recessed work surface measuring 68-1/2"L x 24"D, fastened with metal cleats and screws to provide an adult work surface height of 29”H. This unit is supplied with two (2) work surface grommets located toward each end unless otherwise specified. The exposed edge of the recessed work surface will receive a 1/4” thick, solid wood, internal edgeband. The work surface will be supported at midspan with a 1” thick stiffknee that rests on top of the toe board. Extended depth units will have a work surface measuring 68-1/2”W x 27”D.

Catalog #	Description	Height"	Width"	Depth"	Price
CDT-3203	Elementary height, standard depth	32	70	27	
CDT-3203E	Elementary height, extended depth	32	70	30	
CDT-3903	Adult height, standard depth	39	70	27	
CDT-3903E	Adult height, extended depth	39	70	30	

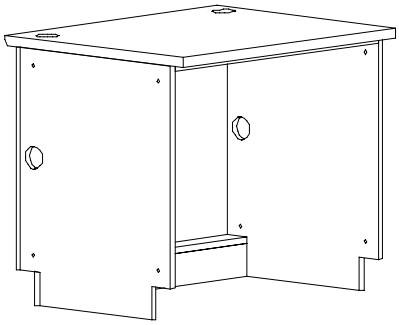

Desk Unit

Each unit will have inside dimensions of 34-1/2”W x 24”D. If requested, work surface grommets are located along the patron edge toward each end.

Catalog #	Description	Height"	Width"	Depth"	Price
CDT-3234	Elementary height, standard depth	32	36	27	
CDT-3234E	Elementary height, extended depth	32	36	30	
CDT-3934	Adult height, standard depth	39	36	27	
CDT-3934E	Adult height, extended depth	39	36	30	

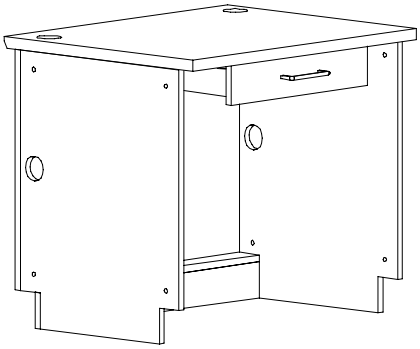

Desk Unit with Pencil Drawer

Each unit will have inside dimensions of 34-1/2”W x 24”D. If requested,work surface grommets are located along the patron edge toward each end. Pencil drawer is 18"W x 3"H x 14-7/8"D and centered under the work surface.

Catalog #	Description	Height"	Width"	Depth"	Price
CDT-3247	Elementary height, standard depth	32	36	27	
CDT-3247E	Elementary height, extended depth	32	36	30	
CDT-3947	Adult height, standard depth	39	36	27	
CDT-3947E	Adult height, extended depth	39	36	30	

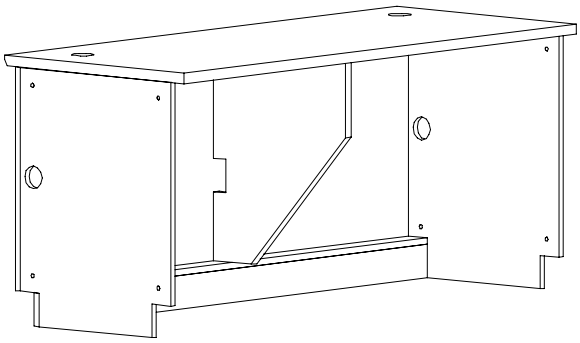

Double Width Desk Unit

Each unit will have inside dimensions of 68-1/2”W x 24”D. If requested, work surface grommets are located toward each end and along the back edge unless otherwise specified.

Catalog #	Description	Height"	Width"	Depth"	Price
CDT-3253	Elementary height, standard depth	32	70	27	
CDT-3253E	Elementary height, extended depth	32	70	30	
CDT-3953	Adult height, standard depth	39	70	27	
CDT-3953E	Adult height, extended depth	39	70	30	

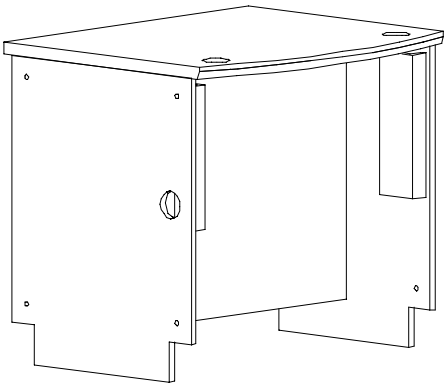

ADA Transaction Unit

Adult-height units will have a 36”W x 36”D work surface mounted at 32”H (both heights) and modesty panel mounted along unit midline. Elementary-height units will have a continuous work surface that extends to 36”D along unit width and modesty panel mounted along unit midline. This unit is supplied with two (2) work surface grommets located at each end unless otherwise specified. Wire chases are provided to conceal wires.

Note, when the adult version is used between two other adult units, the resulting effect will be a captured top. When the adult version is used on one end of the circulation desk, an *elementary finished end panel* should be ordered for that end. This unit is supplied with two work surface grommets located each end of the unit unless otherwise specified.

Catalog #	Description	Height"	Width"	Depth"	Price
CDT-3220	Elementary height, standard depth	32	36	36	
CDT-3220E	Elementary height, extended depth	32	36	36	
CDT-3920	Adult height, standard depth	32	36	36	
CDT-3920E	Adult height, extended depth	32	36	36	

“It is the mark of an educated mind to be able to entertain a thought without accepting it.” Aristotle

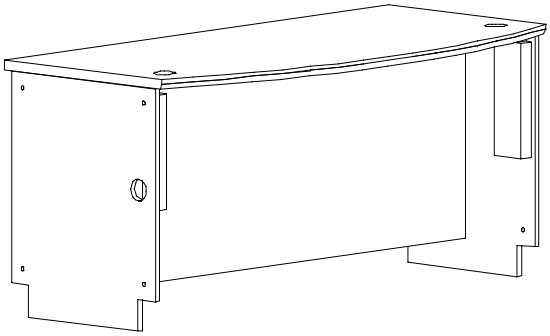

Double-Width ADA Transaction Unit

Adult-height units will have a 70”W x 36”D captured work surface mounted at 32”H and modesty panel mounted along unit midline. Elementary-height units will have a continuous work surface that extends to 36”D along unit width and modesty panel mounted along unit midline. This unit is supplied with two (2) work surface grommets located at each end unless otherwise specified.

Note, when the adult version is used between two other adult units, the resulting effect will be a captured top. When the adult version is used on one end of the circulation desk, an *elementary finished end panel* should be ordered for that end. This unit is supplied with two work surface grommets located each end of the unit unless otherwise specified.

Catalog #	Description	Height"	Width"	Depth"	Price
CDT-3221	Elementary height, standard depth	32	70	36	
CDT-3221E	Elementary height, extended depth	32	70	36	
CDT-3921	Adult height, standard depth	32	70	36	
CDT-3921E	Adult height, extended depth	32	70	36	

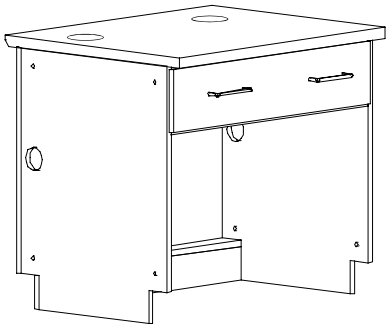

Single Drawer Knee Space Unit

If requested, work surface grommets are located toward each end and along the back edge unless otherwise specified. Each unit will have a full-width drawer measuring 33-1/2”W x 18”D x 5-1/4”H.

Catalog #	Description	Height"	Width"	Depth"	Price
CDT-3236	Elementary height, standard depth	32	36	27	
CDT-3236E	Elementary height, extended depth	32	36	30	
CDT-3936	Adult height, standard dept	39	36	27	
CDT-3936E	Adult height, extended depth	39	36	30	

“An educated person is one who has learned that information almost always turns out to be at best incomplete...”
Russell Baker

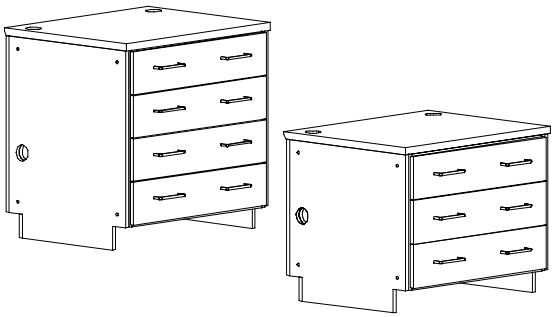

Shown Adult & Elementary

Single Drawer Stack Unit

Each unit will consist of a stack of full width drawers measuring 33-1/2”W x 18”D x 5-1/4”H. The adult height unit will be supplied with four (4) drawers and the elementary unit will be supplied with three (3) drawers. If requested,work surface grommets are located along the patron edge toward each end.

Catalog #	Description	Height"	Width"	Depth"	Price
CDT-3222	Elementary height, standard depth	32	36	27	
CDT-3222E	Elementary height, standard depth	32	36	30	
CDT-3922	Adult height, standard depth	39	36	27	
CDT-3922E	Adult height, extended depth	39	36	30	

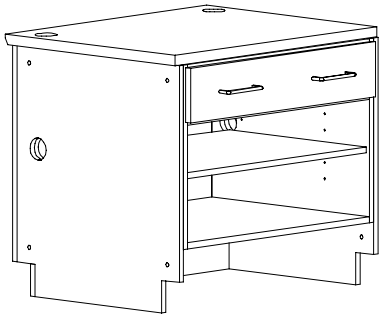

Single Drawer Open Shelf Unit

Each unit will consist a full width drawer measuring 33-1/2”W x 18”D x 5-1/4”H. Each unit will have (1) base shelf measuring 34-1/2”W x 23-13/16”D which is removable to provide wiring access for floor receptacles. Adjustable shelves will measure 34-1/4”W x 22”D, which provides a 3/4”D wiring access at the rear of the shelf, so as to not impede the shelf’s free-adjustment. Adult-height units will be supplied with two (2) adjustable shelves and elementary-height units will be supplied with one (1) adjustable shelf. If requested,work surface grommets are located along the patron edge toward each end.

Catalog #	Description	Height"	Width"	Depth"	Price
CDT-3237	Elementary height, standard depth	32	36	27	
CDT-3237E	Elementary height, extended depth	32	36	30	
CDT-3937	Adult height, standard depth	39	36	27	
CDT-3937E	Adult height, extended depth	39	36	30	

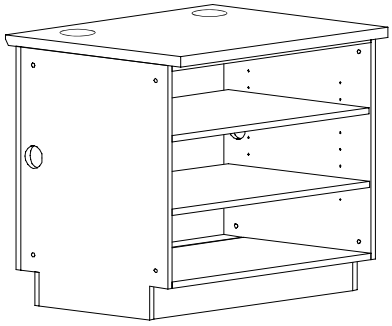

Open Shelf Unit

Each unit will be supplied with one removable (1) base shelf measuring 34-1/2”W x 23-13/16”D to provide wiring access for floor receptacles. Adjustable shelves will measure 34-1/4”W x 22”D, providing a 3/4”D wiring access at the rear of the shelf, so as to not impede the shelf’s free-adjustment. Adult-height units will be supplied with two (2) adjustable shelves and elementary-height units will be supplied with one (1) adjustable shelf. If requested,work surface grommets are located along the patron edge toward each end.

Catalog #	Description	Height"	Width"	Depth"	Price
CDT-3208	Elementary height, standard depth	32	36	27	
CDT-3208E	Elementary height, extended depth	32	36	30	
CDT-3908	Adult height, standard depth	39	36	27	
CDT-3908E	Adult height, extended depth	39	36	30	

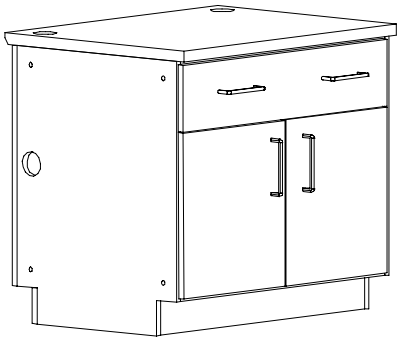

Single Drawer Cupboard Unit

Each unit will have a single drawer measuring 33-1/2”W x 18”D x 5-1/4”H under the work surface. A movable base shelf measuring 34-1/2”W x 23-13/16”D provides wiring access for floor receptacles. Adjustable shelves measure 34-1/4”W x 22”D, providing a 3/4”D wiring access at the rear of the shelf, so as to not impede the shelf’s free-adjustment. Adult-height units will be supplied with 2 adjustable shelves and elementary-height units will be supplied with 1 adjustable shelf. Cupboard doors are secured with one lock unless otherwise specified. If requested,work surface grommets are located along the patron edge toward each end.

Catalog #	Description	Height"	Width"	Depth"	Price
CDT-3246	Elementary height, standard depth	32	36	27	
CDT-3246E	Elementary height, extended depth	32	36	30	
CDT-3946	Adult height, standard depth	39	36	27	
CDT-3946E	Adult height, extended depth	39	36	30	

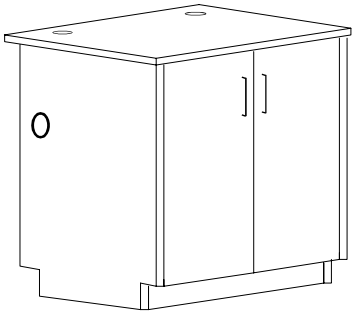

Cupboard Unit

Each unit will be supplied with one (1) base shelf measuring 34-1/2”W x 23-13/16””D which is removable to provide wiring access for floor receptacles. Adjustable shelves will measure 34-1/4”W x 22”D, which provides a 3/4”D wiring access at the rear of the shelf, so as to not impede the shelf’s free-adjustment. Adult-height units will be supplied with two (2) adjustable shelves and elementary-height units will be supplied with one (1) adjustable shelf. This unit is supplied with one (1) lock that locks both doors unless otherwise specified. If requested,work surface grommets are located along the patron edge toward each end.

Catalog #	Description	Height"	Width"	Depth"	Price
CDT-3210	Elementary height, standard depth	32	36	27	
CDT-3210E	Elementary height, extended depth	32	36	30	
CDT-3910	Adult height,standard depth	39	36	27	
CDT-3910E	Adult height, extended depth	39	36	30	

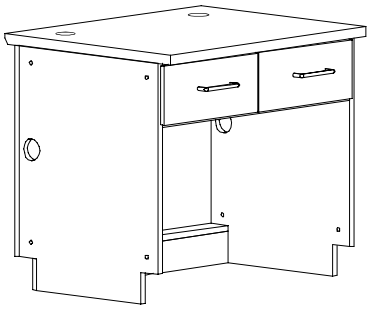

Double Drawer Knee Space Unit

Each unit will have two (2) equal-width drawers measuring 14-7/8"W x 18"D x 5-1/4"H. This unit is supplied with one (1) lock on the right drawer unless otherwise specified. If requested,work surface grommets are located along the patron edge toward each end.

Catalog #	Description	Height"	Width"	Depth"	Price
CDT-3209	Elementary height, standard depth	32	36	27	
CDT-3209E	Elementary height, extended depth	32	36	30	
CDT-3909	Adult height, standard depth	39	36	27	
CDT-3909E	Adult height, extended depth	39	36	30	

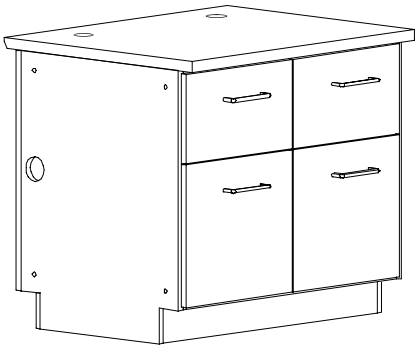

Double Drawer Stack Unit

Each unit will have a double stack of equal-width drawers, configured according to height. Adult-height units will have four (4) file drawers measuring 14-7/8”W x 18”L x 10-1/2”H and two (2) box drawers measuring 14-7/8"W x 18"D x 5-1/4"H. Elementary-height units will have four (4) file drawers measuring 14-7/8”W x 18”D x 10-1/2”H. This unit is supplied with one (1) front-mounted lock on right drawer unless otherwise specified. If requested, work surface grommets are located along the patron edge toward each end.

Catalog #	Description	Height"	Width"	Depth"	Price
CDT-3229	Elementary height, standard depth	32	36	27	
CDT-3229E	Elementary height, extended depth	32	36	30	
CDT-3929	Adult height, standard dpeth	39	36	27	
CDT-3929E	Adult height, extended depth	39	36	30	

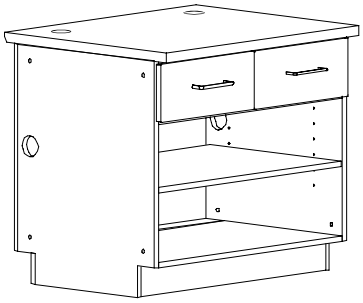

Double Drawer Open Shelf Unit

Each unit will have (2) equal-width drawers measuring 14-7/8"W x 18"D x 5-1/4"H. Each unit will be supplied with one (1) base shelf measuring 34-1/2”W x 23-13/16”D which is removable to provide wiring access for floor receptacles. Each unit will also be supplied with one (1) adjustable shelf measuring 34-1/4”W x 22”D, which provides a 3/4”D wiring access at the rear of the shelf, so as to not impede the shelf’s free-adjustment. Also, this unit is supplied with one (1) lock on the right drawer unless otherwise specified. If requested, work surface grommets are located along the patron edge toward each end.

Catalog #	Description	Height"	Width"	Depth"	Price
CDT-3207	Elementary height, standard depth	32	36	27	
CDT-3207E	Elementary height, extended depth	32	36	30	
CDT-3907	Adult height, standard depth	39	36	27	
CDT-3907E	Adult height, extended depth	39	36	30	

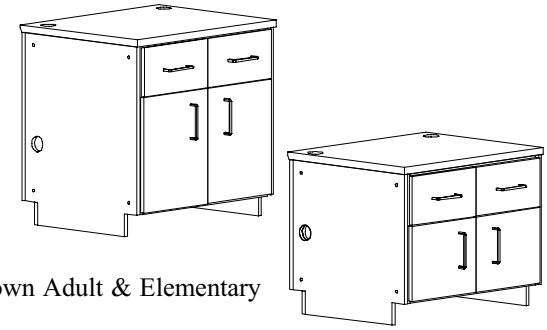

Shown Adult & Elementary

Double Drawer Cupboard Unit

Each unit will have two equal measure drawers 14-7/8"W x 18"D x 5-1/4"H. One removable base shelf measuring 34-1/2”W x 23-15/16”D provides wiring access for floor receptacles. Adjustable shelves will measure 34-1/2”W x 22”D, providing 3/4”D wiring access at the rear of the shelf, so as to not impede the shelf’s free-adjustment. Adult-height units will be supplied with two (2) adj. shelves and elementary-height units will be supplied with one (1) adjustable shelf. This unit is supplied with one (1) lock on right drawer unless otherwise specified. If requested, work surface grommets are located along the patron edge toward each end.

Catalog #	Description	Height"	Width"	Depth"	Price
CDT-3238	Elementary height, standard depth	32	36	27	
CDT-3238E	Elementary height, extended depth	32	36	30	
CDT-3938	Adult height, standard depth	39	36	27	
CDT-3938E	Adult height, extended depth	39	36	30	

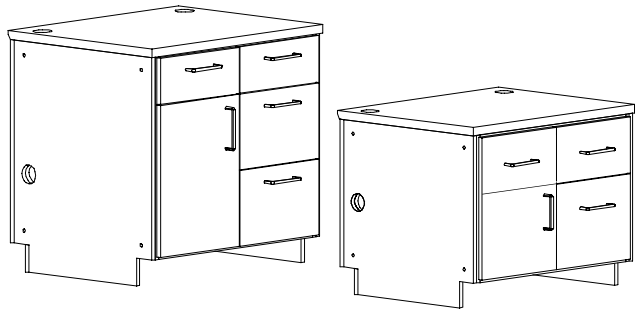

Double Drawer, *Left* Cupboard & File Unit

Each adult height unit will have 2 box drawers, 2 file drawers and 2 adjustable shelves. Elementary height units have 2 box drawers, 1 file drawer and 1 adjustable shelf. The top drawers and cupboard door will have a lock. The box drawers are 14-7/8"W x 18"D x 5-1/4"H. The file drawers are 14-7/8”W x 18”D x 10-1/2”H. Cupboard left side,
File Drawers on right. If requested, work surface grommets are located along the patron edge toward each end.

Catalog #	Description	Height"	Width"	Depth"	Price
CDT-3241	Elementary height, standard depth	32	36	27	
CDT-3241E	Elementary height, extended depth	32	36	30	
CDT-3941	Adult height, standard depth	39	36	27	
CDT-3941E	Adult height, extended depth	39	36	30	

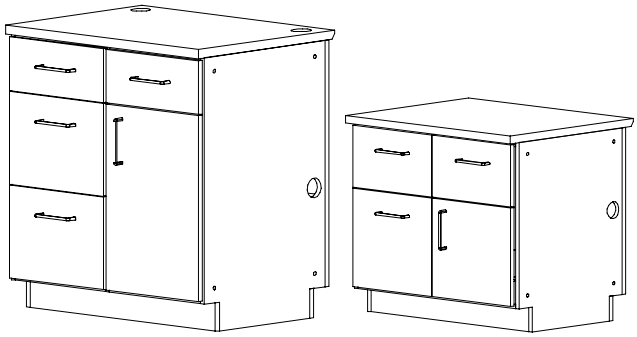

Double Drawer, *Right* Cupboard & File Unit

Each adult height unit will have 2 box drawers, 2 file drawers and 2 adjustable shelves. Elementary height units have 2 box drawers, 1 file drawer and 1 adjustable shelf. The top drawers and cupboard door will have a lock. The box drawers are 14-7/8"W x 18"D x 5-1/4"H. The file drawers are 14-7/8”W x 18”D x 10-1/2”H. Cupboard on right side file drawers on left side. If requested, work surface grommets are located along the patron edge toward each end.

Catalog #	Description	Height"	Width"	Depth"	Price
CDT-3254	Elementary height, standard depth	32	36	27	
CDT-3254E	Elementary height, extended depth	32	36	30	
CDT-3954	Adult height, standard depth	39	36	27	
CDT-3954E	Adult height, extended depth	39	36	30	

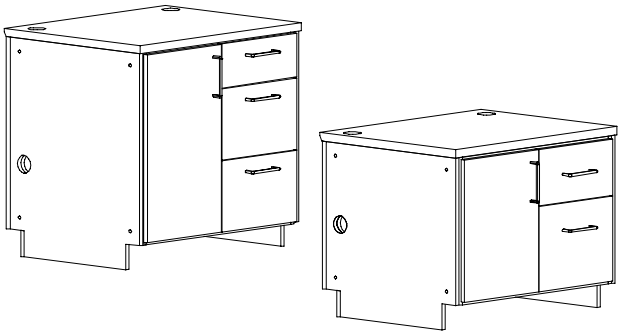

File Drawer *Left* Cupboard Unit

Each adult height unit will have two (2) file drawers, one (1) box drawer, and two (2) adjustable shelves. Elementary height units have one (1) box drawer, one (1) file drawer and one (1) adjustable shelf. The top drawer and cupboard door will receive a lock. The box drawers are 14-7/8"W x 5-1/4"H x 18"D. The file drawers are 14-7/8”W x 18”D x 10-1/2”H. The drawer tack will be on the right side and the cupboard unit will be on the left side. If requested, work surface grommets are located along the patron edge toward each end.

Catalog #	Description	Height"	Width"	Depth"	Price
CDT-3240	Elementary height, standard depth	32	36	27	
CDT-3240E	Elementary height, extended depth	32	36	30	
CDT-3940	Adult height, standard depth	39	36	27	
CDT-3940E	Adult height, extended depth	39	36	30	

Shown Adult & Elementary

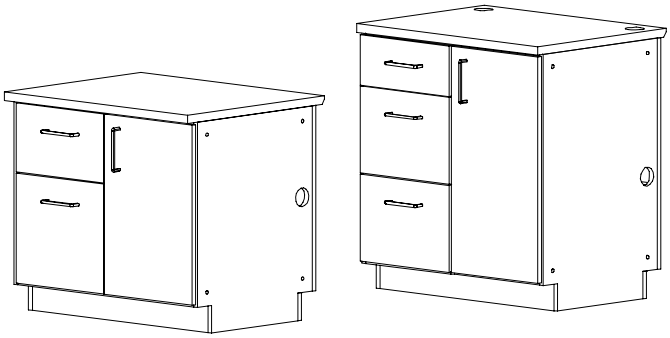

File Drawer *Right* Cupboard Unit

Each adult height unit will have one (1) box drawer, two (2) file drawers and two (2) adjustable shelves. Elementary height units have one (1) box drawer, one (1) file drawer and one (1) adjustable shelf. The top drawer and cupboard door will receive a lock. The box drawers are 14-7/8"W x 18"D x 5-1/4"H. The file drawers are 14-7/8”W x 18”D x 10-1/2”H. The drawer stack will be on the left side, the cupboard unit on the right side. If requested, work surface grommets are located along the patron edge toward each end.

Catalog #	Description	Height"	Width"	Depth"	Price
CDT-3239	Elementary height, standard depth	32	36	27	
CDT-3239E	Elementary height, extended depth	32	36	30	
CDT-3939	Adult height, standard depth	39	36	27	
CDT-3939E	Adult height, extended depth	39	36	30	

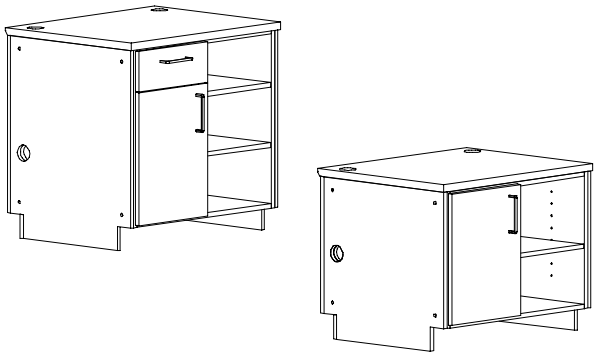

Left Cupboard Open Shelf Unit

On the left side, the adult unit will be supplied with a locking box drawer and a cupboard space with two (2) adjustable shelves, and the elementary unit will only be supplied with a left cupboard unit with one (1) adjustable shelf. The right side of the unit will be open adjustable shelving. The adult height unit will be supplied with two (2) adjustable shelves, and the elementary height unit will be supplied with one (1) adjustable shelf. Adult unit box drawer is 14-7/8"W x 18"D x 5-1/4"H. If requested, work surface grommets are located along the patron edge toward each end.

Catalog #	Description	Height"	Width"	Depth"	Price
CDT-3242	Elementary height,standard depth	32	36	27	
CDT-3242E	Elementary height, extended depth	32	36	30	
CDT-3942	Adult height, standard depth	39	36	27	
CDT-3942E	Adult height, extended depth	39	36	30	

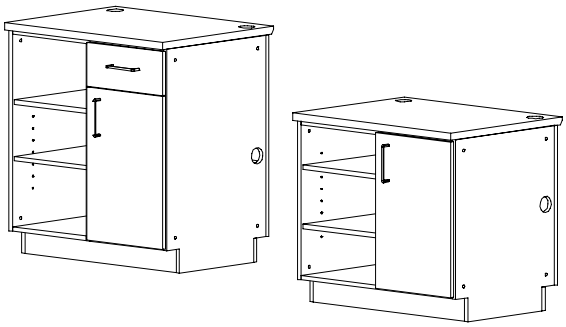

Right Cupboard Open Shelf Unit

On the right side, the adult unit will be supplied with a locking box drawer and a cupboard space with two (2) adjustable shelves and the elementary unit will only be supplied withonly a cupboard unit with one (1) adjustable shelf. The left side of the unit will be open adjustable shelving. The adult height unit will be supplied with two (2) adjustable shelves, and the elementary height unit will be supplied with one (1) adjustable shelf. Adult unit box drawer is a 14-7/8"W x 18"D x 5-1/4"H. If requested, work surface grommets are located along the patron edge toward each end.

Catalog #	Description	Height"	Width"	Depth"	Price
CDT-3243	Elementary height,standard depth	32	36	27	
CDT-3243E	Elementary height, extended depth	32	36	30	
CDT-3943	Adult height, standard depth	39	36	27	
CDT-3943E	Adult height, extended depth	39	36	30	

Shown Adult & Elementary

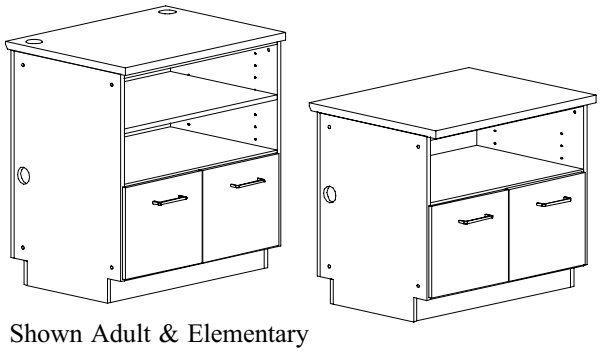

Shown Adult & Elementary

Two-Drawer File Open Top Shelf Unit

Each unit has two equal-width file drawers measuring 14-7/8”W x 18”D x 10-1/2”H . Each unit will be supplied with one (1) fixed shelf measuring 34-1/2”W x 24”D. Adjustable shelves will measure 34-1/2”W x 22”D, which provides a 3/4”D wiring access at the rear of the shelf, so as to not impede the shelf’s free-adjustment. Adult-height units will be supplied with one (1) adjustable shelf and elementary-height units will not be supplied with an adjustable shelf. If requested, work surface grommets are located along the patron edge toward each end.

Catalog #	Description	Height"	Width"	Depth"	Price
CDT-3214	Elementary height, standard depth	32	36	27	
CDT-3214E	Elementary height, extended depth	32	36	30	
CDT-3914	Adult height, standard depth	39	36	27	
CDT-3914E	Adult height, extended depth	39	36	30	

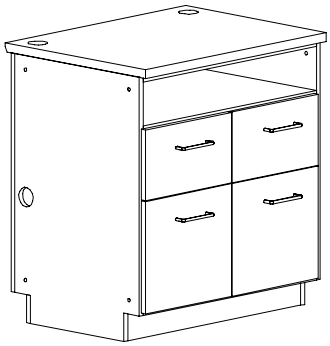

Four-Drawer File Open Top Shelf Unit

Each unit has four equal-width file drawers measuring 14-7/8”W x 18”D x 10-1/2”H. Adult-height units are supplied with one (1) fixed shelf measuring 34-1/2”W x 24”D to provide open storage of materials. Elementary-height units will not have open storage compartment. If requested, work surface grommets are located along the patron edge toward each end.

Catalog #	Description	Height"	Width"	Depth"	Price
CDT-3215	Elementary height, standard depth	32	36	27	
CDT-3215E	Elementary height, extended depth	32	36	30	
CDT-3915	Adult height, standard depth	39	36	27	
CDT-3915E	Adult height, extended depth	39	36	30	

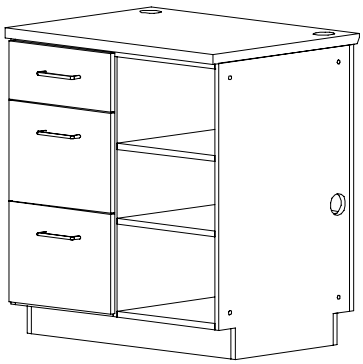

Shown Adult - see 3245 for elementary features

Left File Drawer Open Shelf Unit

Each adult height unit will have two (2) file drawers, one (1) box drawer, and two (2) adjustable shelves. Elementary height units will have one (1) box drawer, one (1) file drawer and one (1) adjustable shelf. The top drawer will receive a lock. The box drawers are 14-7/8"W x 5-1/4"H x 18"D. The file drawers are 14-7/8”W x 18”D x 10-1/2”H. The drawer stack will be on the left side and the open shelf will be on the right side. Adult unit box drawer is 14-7/8"W x 18"D x 5-1/4"H. If requested, work surface grommets are located along the patron edge toward each end.

Catalog #	Description	Height"	Width"	Depth"	Price
CDT-3244	Elementary height, standard depth	32	36	27	
CDT-3244E	Elementary height,extended depth	32	36	30	
CDT-3944	Adult height, standard depth	39	36	27	
CDT-3944E	Adult height, extended depth	39	36	30	

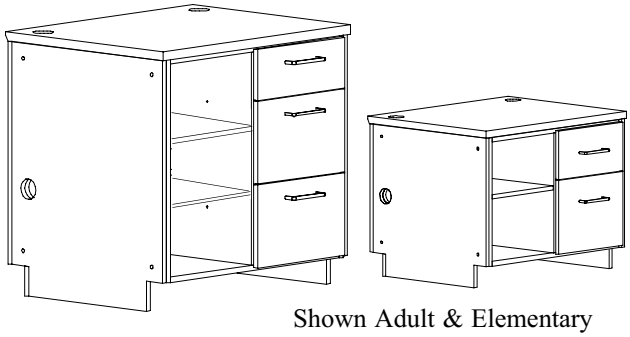

Shown Adult & Elementary

Right File Drawer Open Shelf Unit

Each adult height unit will have two (2) file drawers, one (1) box drawer, and two (2) adjustable shelves. Elementary height units will have one (1) box drawer, one (1) file drawer and one (1) adjustable shelf. The top drawer will receive a lock. The box drawers are 14-7/8"W x 18"D x 5-1/4"H. The file drawers are 14-7/8”W x 18”D x 10-1/2”H. The drawer stack will be on the right side and the open shelf will be on the left side. If requested, work surface grommets are located along the patron edge toward each end.

Catalog #	Description	Height"	Width"	Depth"	Price
CDT-3245	Elementary height, standard depth	32	36	27	
CDT-3245E	Elementary height,extended depth	32	36	30	
CDT-3945	Adult height, standard depth	39	36	27	
CDT-3945E	Adult height, extended depth	39	36	30	

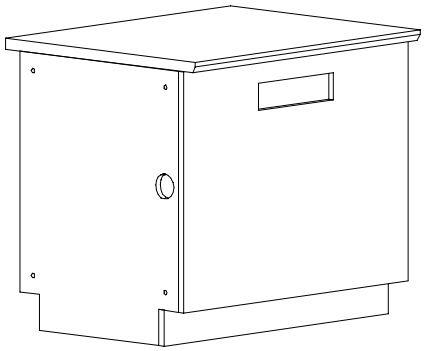

Book Return Unit

Each unit will have an open-back design to allow insertion of a depressible book truck (BT-D39 for adult-height units or BT-D32 for elementary-height units). The front panel will have a 3"H x 12"W book-return slot, fully edgebanded, with an internal wood chute so as to allow gentle deposit of books into book truck. If requested, work surface grommets are located along the patron edge toward each end.

Catalog #	Description	Height"	Width"	Depth"	Price
CDT-3205	Elementary height, standard depth	32	36	27	
CDT-3205E	Elementary height, extended depth	32	36	30	
CDT-3905	Adult height, standard depth	39	36	27	
CDT-3905E	Adult height, extended depth	39	36	30	

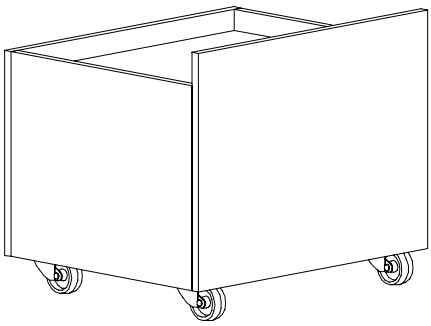

Depressible Book Truck

Each unit will have a depressible platform that will hold approximately 70 books. Each unit will have four 3" swivel casters mounted directly to a 3/4”T red oak veneer plywood bottom using 5/16” dia bolts with are received on the top size of plywood via T-nuts.

Catalog #	Description	Height"	Width"	Depth"	Price
BT-D32	Elementary height	22	26	22	
BT-D39	Adult height	29	26	22	

Traditional Series Trim Packages

These trim packages for the Traditional Series give you a wide range of design and cost options.

Ordering a trim package is simple.
1. Select the Traditional service units you desire in your circulation desk arrangement.
2. Determine the total number of single width or small corner units, multiply by selected package upcharge.
3. Determine the total number of double or larger corner units, multiply by selected package upcharge.
4. Add the total single and double widths to determine the total trim package upcharge.

NOTE: The Quantum and Regal packages are not available on radius corner desk or service units.

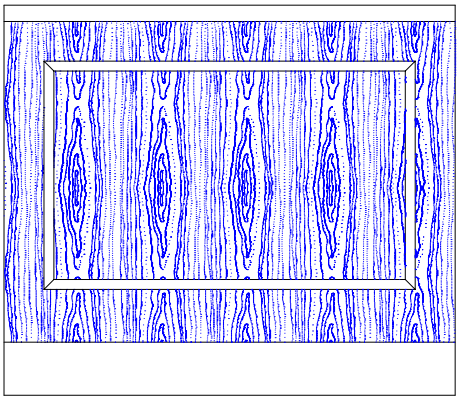

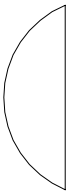

Quadrum TM

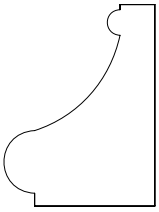

Regal TM

The Quadrum and Regal packages can be applied to any flat modesty panel or end panel. The treatment forms a rectangle that is about 3" from all edges. The trim package comes with the choice of two moldings. The edge details of these two moldings can be seen below. On 36"L circulation desks the modesty panels receives one such rectangle while a 72"L unit would receive two such rectangles NOTE: The Quadrum and Regal packages are not available on radiused desk or corner units.

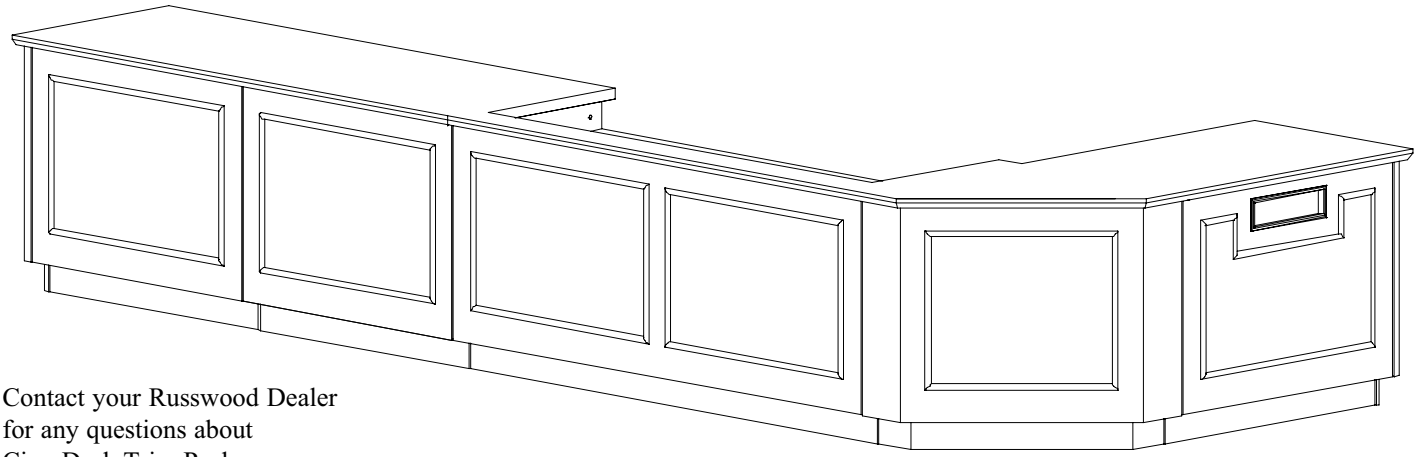

Contact your Russwood Dealer
for any questions about
Circ. Desk Trim Packages.

Catalog #	Description	Single W" unit upcharge	Double "W unit upcharge $
QDT-1	Quadrum Trim Package for Traditional Series		
RGT-1	Regal Trim Package for Traditional Series		
	To figure upcharge:	# Single units (x) upcharge per unit =	
		# Double units (x) upcharge per unit = + _____	
		Total upcharge $	

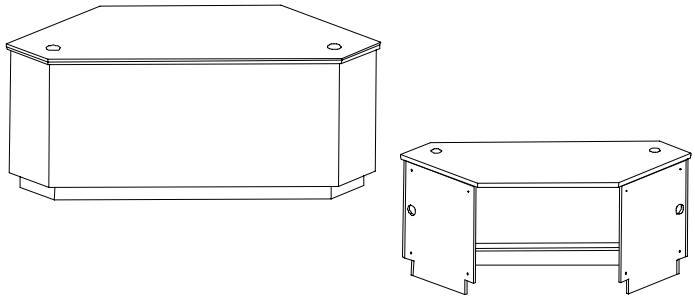

Corner Desk Unit

Each unit is designed to provide a 90-degree transition in any desk arrangement, while providing a corner work space. The working width for staff-side accessibility will be 35”W. If requested, this unit is supplied with two (2) work surface grommets located at each end unless otherwise specified.

Catalog #	Description	Height"	Width"	Depth"	Price
CDT-3233	Elementary height, standard depth	32	72-5/8	27	
CDT-3233E	Elementary height, extended depth	32	76-15/16	30	
CDT-3933	Adult height, standard depth	39	72-5/8	27	
CDT-3933E	Adult height, extended depth	39	76-15/16	30	

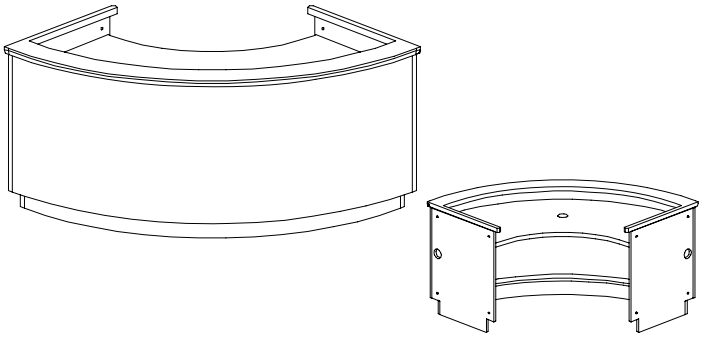

90 Degree Patron Desk Unit

Each unit is designed to provide a radiused 90-degree transition in any desk arrangement, while providing a corner work space with a recessed work surface and patron ledge. The recessed work surface will be mounted at 29”H using metal cleats. The working width for staff-side accessibility will be 35”W. This unit is supplied with two (2) work surface grommets located at each end unless otherwise specified.

Catalog #	Description	Height"	Width"	Depth"	Price
CDT-3250	Elementary height, standard depth	32	72-5/8	27	
CDT-3250E	Elementary height, extended depth	32	76-15/16	30	
CDT-3950	Adult height, standard depth	39	72-5/8	27	
CDT-3950E	Adult height, extended depth	39	76-15/16	30	

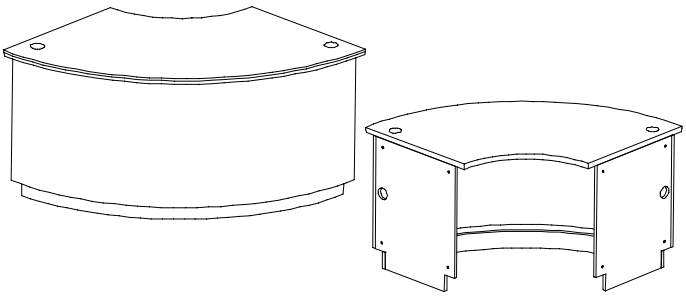

90 Degree Desk Unit

Each unit is designed to provide a radiused 90-degree transition in any desk arrangement, while providing a corner work space. The working width for staff-side accessibility will be 35”W. This unit is supplied with two (2) work surface grommets located at each end unless otherwise specified. If requested, work surface grommets are located along the patron edge toward each end.

Catalog #	Description	Height"	Width"	Depth"	Price
CDT-3251	Elementary height, standard depth	32	72-5/8	27	
CDT-3251E	Elementary height, extended depth	32	76-15/16	30	
CDT-3951	Adult height, standard depth	39	72-5/8	27	
CDT-3951E	Adult height,extended depth	39	76-15/16	30	

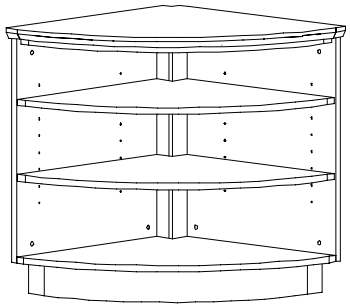

Radiused 90 Degree Open Shelf Corner Unit

Each unit will be triangular, with a radiused, open-face design and will be used to form a 90-degree transition in any desk arrangement. Adult height units will be supplied with two (2) adjustable shelves. Elementary height units will be supplied with one (1) adjustable shelf. Open shelf corner units do not provide for wire access. Shelves will be accessible from patron side of circulation desk.

Catalog #	Description	Height"	Width"	Depth"	Price
CDT-3226	Elementary height, standard depth	32	30	30	
CDT-3226E	Elementary height, extended depth	32	33	33	
CDT-3926	Adult height, standard depth	39	30	30	
CDT-3926E	Adult height, extended depth	39	33	33	

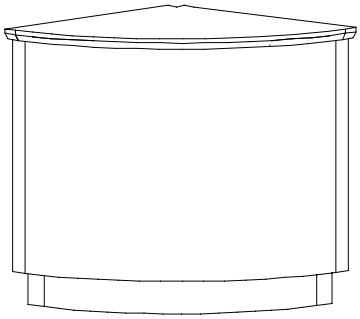

Radiused 90 Degree Closed Corner Unit

Each unit will be triangular, with a radiused, closed-face design and will be used to form a 90-degree transition in any desk arrangement. This unit is supplied with an internal wire manager unless otherwise specified.

Catalog #	Description	Height"	Width"	Depth"	Price
CDT-3228	Elementary height, standard depth	32	30	30	
CDT-3228E	Elementary height, extended depth	32	33	33	
CDT-3928	Adult height, standard depth	39	30	30	
CDT-3928E	Adult height, extended depth	39	33	33	

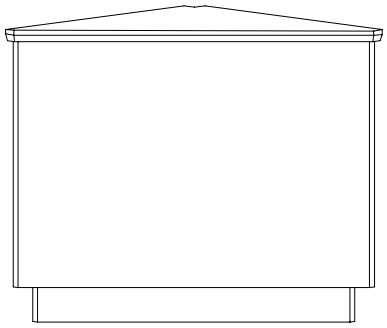

Flat Front 90 Degree Corner Unit

Each unit will be triangular with a flat closed front design and will be used to form a 90-degree transition in any desk arrangement. This unit is supplied with an internal wire manager unless otherwise specified.

Catalog #	Description	Height"	Width"	Depth"	Price
CDT-3252	Elementary height, standard depth	32	30	30	
CDT-3252E	Elementary height, extended depth	32	33	33	
CDT-3952	Adult height, standard depth	39	30	30	
CDT-3952E	Adult height, extended depth	39	33	33	

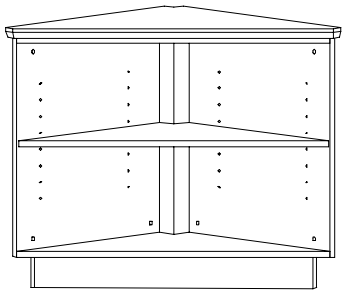

Flat Front Open Shelf 90 Degree Corner Unit

Each unit will be triangular with an flat open-front design and will be used to form a 90-degree transition in any desk arrangement. Each unit will have one (1) fixed base shelf and adjustable shelves according to unit height. Adult-height units will be supplied with two (2) adjustable shelves and elementary-height units will be supplied with one (1) adjustable shelf. Shelves will be accessible from patron side of circulation desk. Open shelf corner units do not provide for wire access.

Catalog #	Description	Height"	Width"	Depth"	Price
CDT-3223	Elementary height, standard depth	32	30	30	
CDT-3223E	Elementary height, extended depth	32	33	33	
CDT-3923	Adult height, standard depth	39	30	30	
CDT-3923E	Adult height, extended depth	39	33	33	

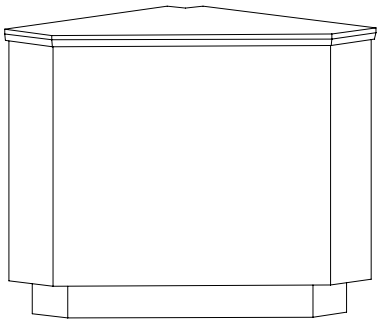

90 Degree Closed Corner Unit

Each unit will be triangular with an angled, closed-face design and will be used to form a 90-degree transition in any desk arrangement. This unit is supplied with end panel grommets and internal wire manager unless otherwise specified.

Catalog #	Description	Height"	Width"	Depth"	Price
CDT-3216	Elementary height, standard depth	32	30	30	
CDT-3216E	Elementary height, extended depth	32	33	33	
CDT-3916	Adult height, standard depth	39	30	30	
CDT-3916E	Adult height, extended depth	39	33	33	

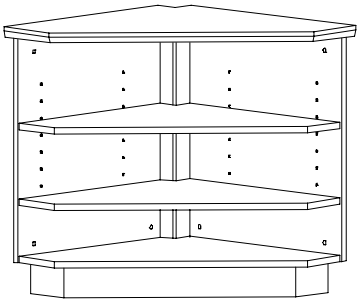

90 Degree Corner Open Shelf Unit

Each unit will be triangular with an open-front design and will be used to form a 90-degree transition in any desk arrangement. Each unit will have one (1) fixed base shelf and adjustable shelves according to unit height. Adult-height units will be supplied with two (2) adjustable shelves and elementary-height units will be supplied with one (1) adjustable shelf. Shelves will be accessible from patron side of circulation desk.

Catalog #	Description	Height"	Width"	Depth"	Price
CDT-3217	Elementary height, standard depth	32	30	30	
CDT-3217E	Elementary height, extended depth	32	33	33	
CDT-3917	Adult height, standard depth	39	30	30	
CDT-3917E	Adult height, extended depth	39	33	33	

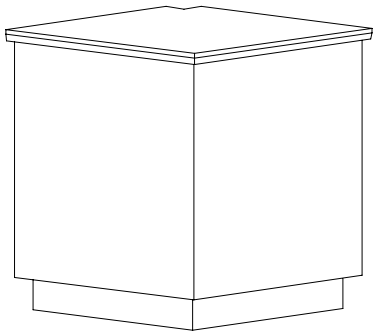

Closed Square Corner Unit

Each unit will be square, with a closed-face design and will be used to form a 90-degree transition in any desk arrangement. This unit is supplied an internal wire manager unless otherwise specified.

Catalog #	Description	Height"	Width"	Depth"	Price
CDT-3224	Elementary height, standard depth	32	30	30	
CDT-3224E	Elementary height, extended depth	32	33	33	
CDT-3924	Adult height, standard depth	39	30	30	
CDT-3924E	Adult height, extended depth	39	33	33	

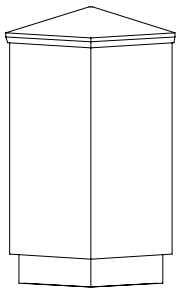

Closed 45 Degree Corner Unit

Each unit will be triangular, with a closed-face design and will be used to form a 45-degree transition in any desk arrangement. This unit is supplied with an internal wire manager unless otherwise specified.

Catalog #	Description	Height"	Width"	Depth"	Price
CDT-3225	Elementary height, standard depth	32	21-3/16	30	
CDT-3225E	Elementary height, extended depth	32	23-1/2	33	
CDT-3925	Adult height, standard depth	39	21-3/16	30	
CDT-3925E	Adult height, extended depth	39	23-1/2	33	

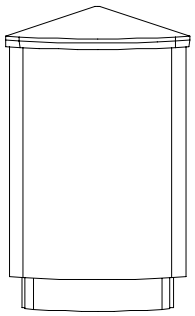

Radiused 45 Degree Closed Corner Unit

Each unit will be triangular, with a radiused, closed-face design and will be used to form a 45-degree transition in any desk arrangement. This unit is supplied with an internal wire manager unless otherwise specified.

Catalog #	Description	Height"	Width"	Depth"	Price
CDT-3227	Elementary height, standard depth	32	21-3/16	30	
CDT-3227E	Elementary height, extended depth	32	23-1/2	33	
CDT-3927	Adult height, standard depth	39	21-3/16	30	
CDT-3927E	Adult height, extended depth	39	23-1/2	33	

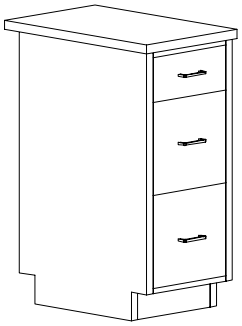

Half-Width File Drawer Unit (free-standing, not a pedestal)

Adult-height units will have two (2) file drawers measuring 14-7/8”W x 18”D x 10-1/2”H and one (1) box drawer 14-7/8” x 18”L x 5-1/4”H. Elementary-height units will have one (1) file drawer and one (1) box drawer. This unit is supplied with a front-mounted drawer gang-lock unless otherwise specified.

Catalog #	Description	Height"	Width"	Depth"	Price
CDT-3219	Elementary height, standard depth	32	17	27	
CDT-3219E	Elementary height, extended depth	32	17	30	
CDT-3919	Adult height, standard depth	39	17	27	
CDT-3919E	Adult height, extended depth	39	17	30	

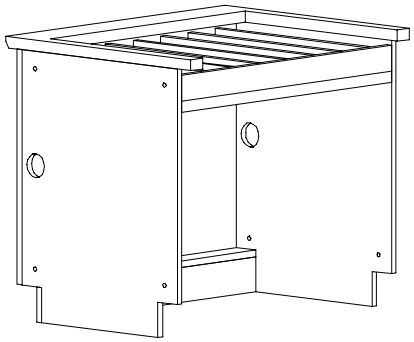

Discharging Unit

Each unit will have a full-width well measuring 34-1/2"W x 8-3/4"H x 24"D (well opening in continuous top measures 32”W x 22”D) to accommodate eight (8) removable index card trays. A 3/4”T x 34-1/2”W well front will be provided to prevent accidental dislodgment of index trays.

Extended depth units will have a full-width well measuring 34-1/2”W x 8-3/4”H x 27”D. (well opening in continuous top measures 32”W x 25”D)

Catalog #	Description	Height"	Width"	Depth"	Price
CDT-3206	Elementary height, standard depth	32	36	27	
CDT-3206E	Elementary height, standard depth	32	36	30	
CDT-3906	Adult height, standard depth	39	36	27	
CDT-3906E	Adult height, extended depth	39	36	30	

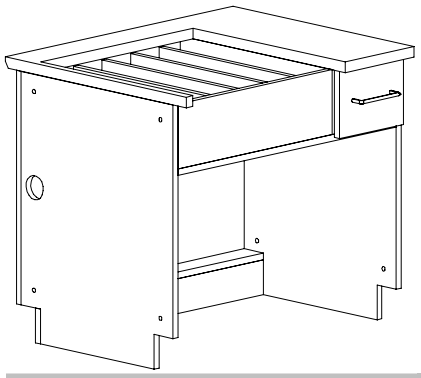

Discharge and Drawer Unit

Each unit will have a well measuring 24-1/8"W x 8-3/4"H x 24"D (well opening in continuous top measures 21-5/8”W x 22”D) to accommodate five (5) removable index card trays and a 7-5/8”W x 18”L box drawer for multiuse. When specified, a card slot will be recessed into the top over the drawer to be used for index card collection. This unit is supplied with a drawer lock unless otherwise specified. Extended depth units will have a well measuring 24-1/8”W x 8-3/4”H x 27”D. (Well opening in continuous top measures 21-5/8”W x 25”D)

Catalog #	Description	Height"	Width"	Depth"	Price
CDT-3204	Elementary height, standard depth	32	36	27	
CDT-3204E	Elementary height, extended depth	32	36	30	
CDT-3904	Adult height, standard depth	39	36	27	
CDT-3904E	Adult height, extended depth	39	36	30	

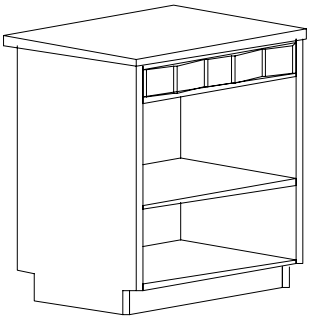

Card File Unit (5 trays)

Unit has an open shelf with a 5 tray index card cabinet. Unit will be supplied with one (1) base shelf measuring 34-1/2”W x 23-15/16”D which is removable to provide wiring access for floor receptacles. Adjustable shelves will measure 34-1/2”W x 22”D, which provides a 3/4”D wiring access at the rear of the shelf, so as to not impede the shelf’s free-adjustment. Adult-height units will be supplied with one (1) adjustable shelf, elementary-height units will not be supplied with an adjustable shelf.

Catalog #	Description	Height"	Width"	Depth"	Price
CDT-3213	Elementary height, standard depth	32	36	27	
CDT-3213E	Elementary height,extended depth	32	36	30	
CDT-3913	Adult height, standard depth	39	36	27	
CDT-3913E	Adult height, extended depth	39	36	30	

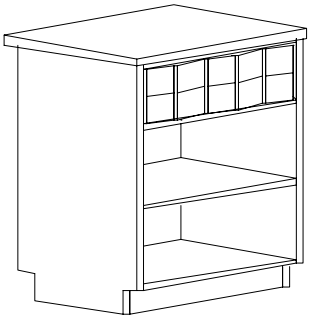

Card File Unit (10 trays)

Unit has an open shelf with a 10 tray index card cabinet. Unit will be supplied with one (1) base shelf measuring 34-1/2”W x 23-15/16”D which is removable to provide wiring access for floor receptacles. Adjustable shelves will measure 34-1/2”W x 22”D, which provides a 3/4”D wiring access at the rear of the shelf, so as to not impede the shelf’s free-adjustment. Adult-height units will be supplied with one (1) adjustable shelf, elementary-height units will not be supplied with an adjustable shelf.

Catalog #	Description	Height"	Width"	Depth"	Price
CDT-3212	Elementary height, standard depth	32	36	27	
CDT-3212E	Elementary height,extended depth	32	36	30	
CDT-3912	Adult height, standard depth	39	36	27	
CDT-3912E	Adult height, extended depth	39	36	30	

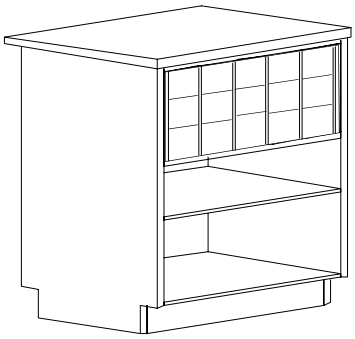

Card File Unit (15 trays)

Unit has an open shelf with a 15 tray index card cabinet. Unit will be supplied with one (1) base shelf measuring 34-1/2”W x 23-15/16”D which is removable to provide wiring access for floor receptacles. Adjustable shelves will measure 34-1/2”W x 22”D, which provides a 3/4”D wiring access at the rear of the shelf, so as to not impede the shelf’s free-adjustment. Adult-height units will be supplied with one (1) adjustable shelf, elementary-height units will not be supplied with an adjustable shelf.

Catalog #	Description	Height"	Width"	Depth"	Price
CDT-3211	Elementary height, standard depth	32	36	27	
CDT-3211E	Elementary height,extended depth	32	36	30	
CDT-3911	Adult height, standard depth	39	36	27	
CDT-3911E	Adult height, extended depth	39	36	30	

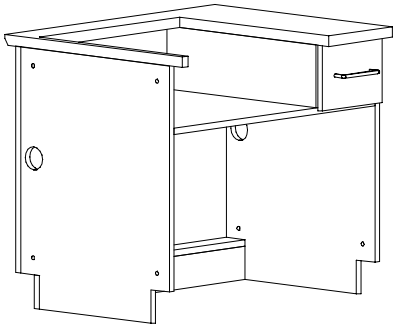

Machine Well Unit

Well measures 24-1/8"W x 8-3/4"H x 24"D (well opening in continuous top measures 21-5/8”W x 22”D) Box drawer measures 10-3/16"W x 18”L. When specified, a card slot will be recessed into the top over the drawer to be used for index card collection. This unit is supplied with a work surface grommet, centered along the well length and a drawer lock unless otherwise specified. Extended depth units will have a well measuring 24-1/8”W x 8-3/4”H x 27”D. (well opening in continuous top measures 21-5/8”W x 25”D)

Catalog #	Description	Height"	Width"	Depth"	Price
CDT-3201	Elementary height, standard depth	32	36	27	
CDT-3201E	Elementary height, extended depth	32	36	30	
CDT-3901	Adult height, standard depth	39	36	27	
CDT-3901E	Adult height, extended depth	39	36	30	

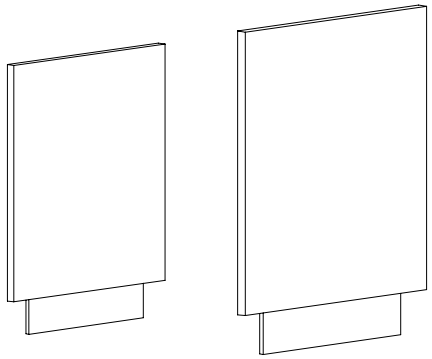

Finished End Panel

Each panel will be constructed using banded, matching veneer-core plywood. Each panel will have a recessed black laminate toe kick space to help provide continuation of the continuous toe kick found on the patron side of the desk. One pair is needed per each continuous-unit assembly.

All fully assembled circulation desks will need two (2) finished end panels unless placement is permanently next to a wall or other structure that hides the unfinished side of the service unit on the end.

ADA Desk Note: When the adult version is used on one end of the circulation desk, an elementary finished end panel should be ordered for that end.

Catalog #	Description	Height"	Thickness"	Width"	Price
CDT-3218	Elementary height, standard depth	32	1	24-3/4	
CDT-3218E	Elementary height, extended depth	32	1	27-3/4	
CDT-3918	Adult height, standard depth	39	1	24-3/4	
CDT-3918E	Adult height, extended depth	39	1	27-3/4	

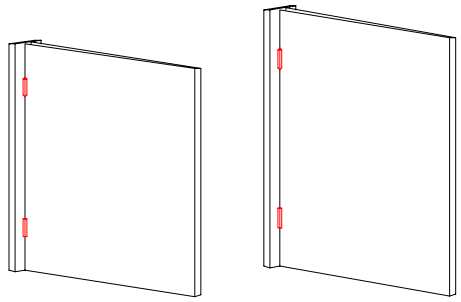

Swinging Gate

When specified, gates will be mounted to walls or finished end panels on the circulation desk. Gates will be constructed using banded, matching veneer-core plywood in widths of up to 36". Single-action gates are supplied with stop moulding. **The desired width of the gate and hinge type (single or double action) MUST BE quoted in advance and specified on the order**

Catalog #	Description	Height"	Width"	Thickness"	Price
CDT-1G 32	Elementary height, single action hinge	32	Specify	1	based on width
CDT-2G 32	Elementary height, double action hinge	32	Specify	1	based on width
CDT-1G 39	Adult height, single action hinge	39	Specify	1	based on width
CDT-2G 39	Adult height, double action hinge	39	Specify	1	based on width

Planning For & Ordering Edgeband for Traditional Series

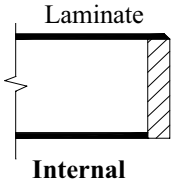

Staff side of the work surface comes with a 1/4" internal solid red oak edgeband.

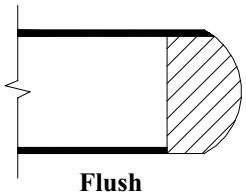

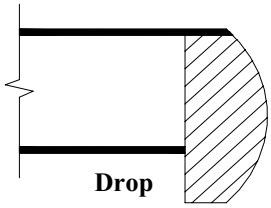

When choosing an edgeband for the Patron and terminating ends of the work surface you can either have the edgeband placed flush with the bottom of the top or dropped below the bottom.

Worksurfaces will be constructed with a 3/4"T solid red oak edgeband and can be ordered with any one of a variety of internal or external edgeband details.

See below for edge details for the Traditional Series.

Edge Details for Traditional Series

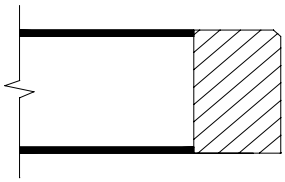

1 1/4" thick top (External)
Montana Flush

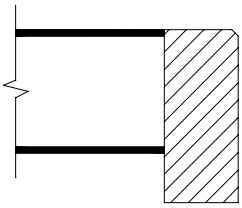

1 1/4" thick top (External)
Montana Drop

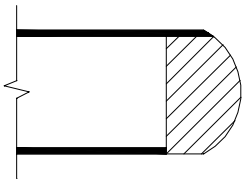

1 1/4" thick top (Internal)
Shallow Bullnose Flush

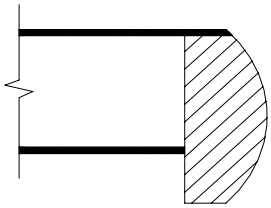

1 1/4" thick top (Internal)
Shallow Bullnose Drop

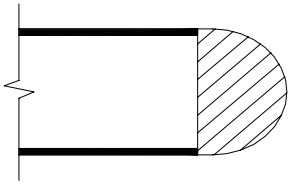

1 1/4" thick top (External)
Bullnose Flush

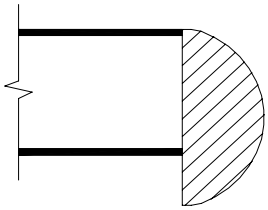

1 1/4" thick top (External)
Bullnose Drop

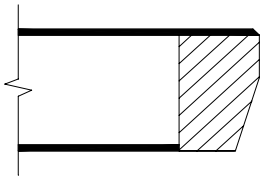

1 1/4" thick top (Internal)
Premier Flush

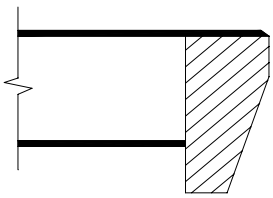

1 1/4" thick top (Internal)
Premier Drop

GENERAL SPECIFICATIONS
The *Ultima Series* circulation desk is designed to provide modularity to further your investment dollars, while providing the look and functionality of a continuous top circulation desk. The units are bolted together to ensure stability, but can be unbolted and rearranged at will, and then rebolted in the new pattern. Each end of the circulation desk is terminated with a finished end panel.

CONSTRUCTION AND MATERIALS
Each desk unit will be constructed from 1" thick veneer core plywood end panels with plain-slice faced veneers, and 3/4”thick veneer core plywood with rift-cut faced veneers. Front panels will be matched for color and grain characteristics to provide uniformity across the entire desk arrangement.

Each unit is constructed with a 6" high x 3/4" deep toe space which is covered with flat black laminate on both sides. All doors, adjustable shelves, and drawer fronts will be constructed from 3/4" thick veneer core, plain-sliced. All visible panel edges will be banded with 1/4" thick eased matching hardwood.

Shelves will be on no greater than 2" centers supported by 1/4" shelf pins. All edges will be banded with 1/4" thick eased matching hardwood. Individual tops will be 1-1/4" thick and will be constructed from 1-1/8" thick particleboard with .050" high-pressure laminate on the face with .020" backer sheet on the underside of the top. Patron side is banded with 3/4” solid red oak with choice of edgeband. SEE PAGE 67 FOR EDGEBAND DETAILS. All remaining edges will be internally banded with 1/4" thick solid red oak.

Each drawer box will be of English dovetail design and will be constructed using 1/2" thick solid northern grown red oak with a 1/4" thick veneer core plywood bottom. Box drawers will be 14-7/8”W x 18”D x 5-1/4”H.

File drawers will be 14-7/8”W x 18”D x 10-1/2”H. Full width drawers will be 31-1/2”W x 18”D x 5-1/4”H.

HARDWARE
All drawers will be constructed to an overall depth of 18" and will be mounted on 18" full-extension, ball bearing glides with a load rating of 100 pounds per pair. On a given desk arrangement, all locks will be keyed identically. All doors will be hung with 110-degree opening, self-closing Salice hinges (180-degree available if specified) and Salice Smove (tm) door cushions.

All door units will be provided with locks. Pulls for both doors and drawers will be satin chrome 5/16" diameter wire pulls. Pull substitutions may be made at customer's request [an additional cost may occur].

All units will be supplied with 3" grommets through the work surface and end panels with J-channel wire manager mounted under the surface on the inside of the front panel.

FINISH: See page 5 for finish specifications.

Visit our website at ***www.russwood.net***

CDU-1

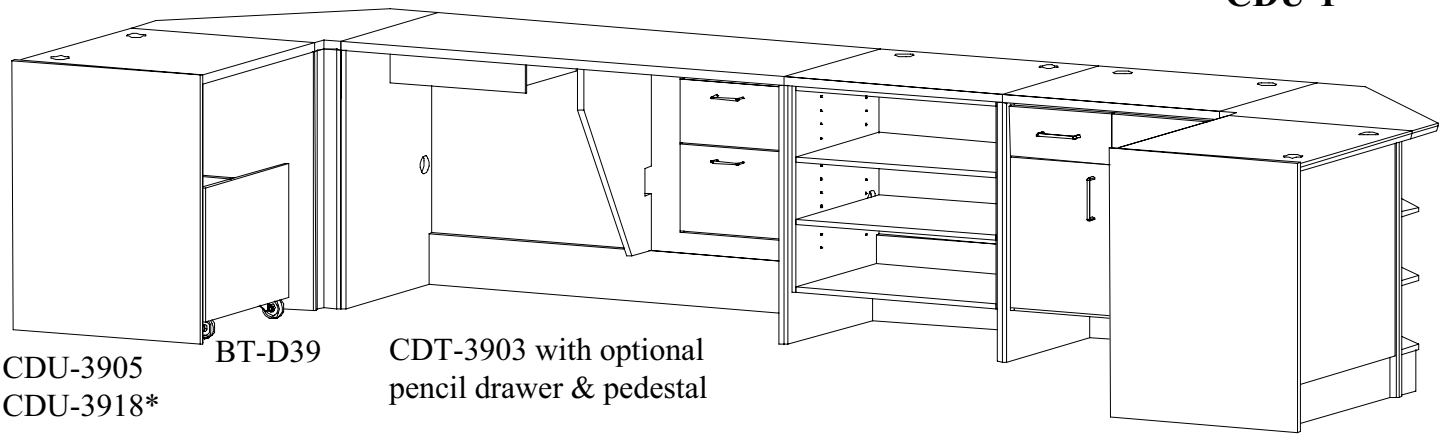

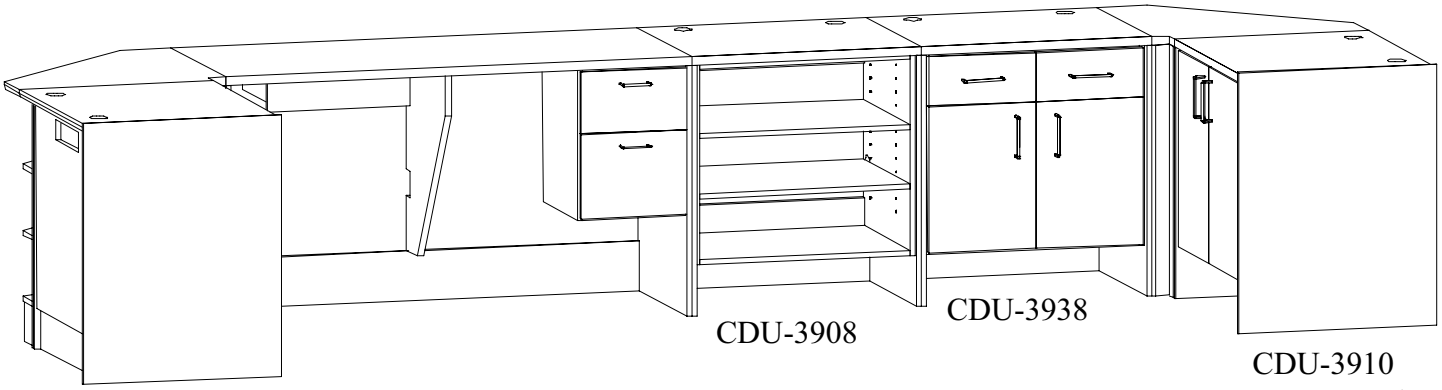

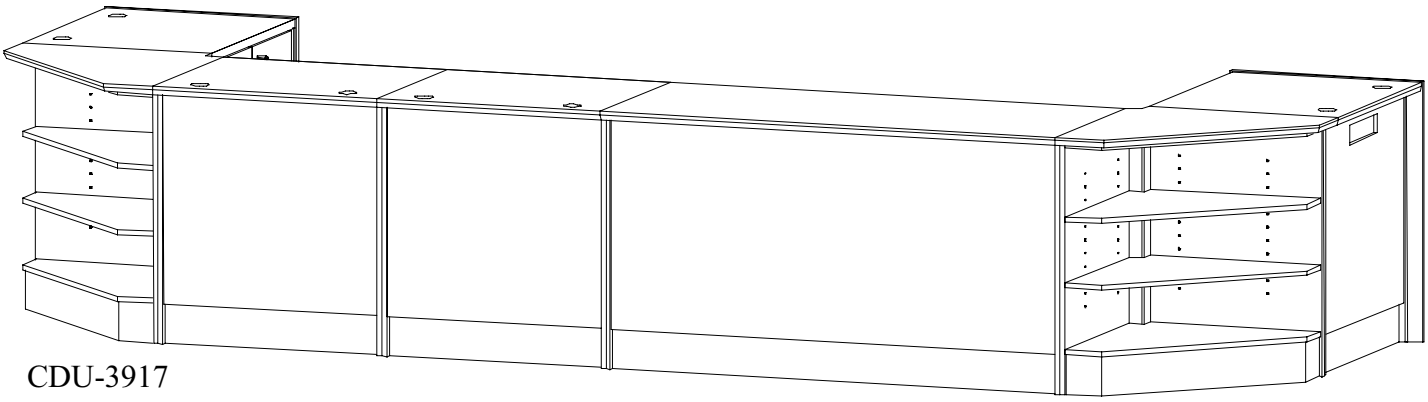

*finished end panel

CDU-2

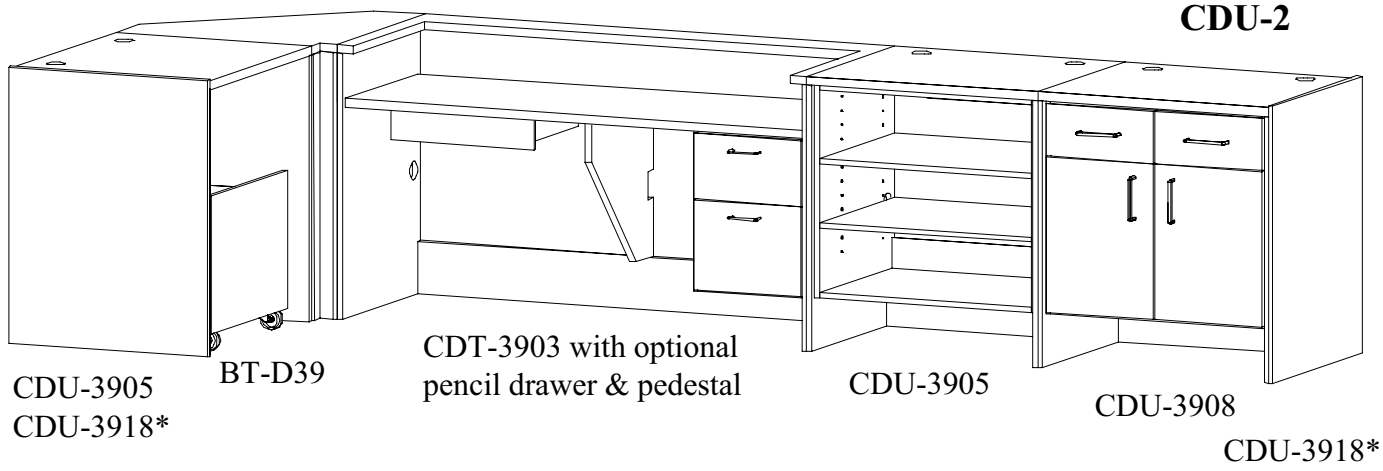

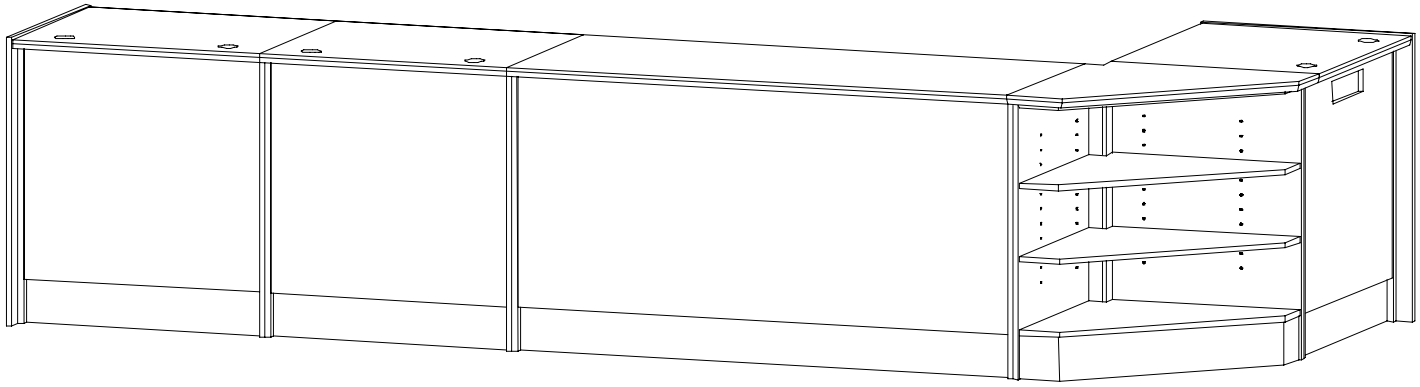

CDU-3917

The ***Ultima Series*** circulation desks offers a continuous work surface by constructing each service unit with its own top which allows for future rearrangement.

The service units shown are featured as our most popular units in this series. Nearly every circulation desk we've produced includes the service units shown. These popular units are a book return with depressible truck, a corner unit, a double patron unit with an optional pencil drawer and pedestal, an open shelf unit, and a cupboard unit. When arranged the desks form either in a "U" shape or a "L" shape depending on the total number of service units ordered. If you desire a service unit that is not shown here then you can choose from the many others that follow.

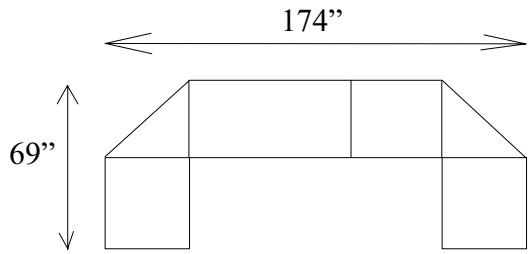

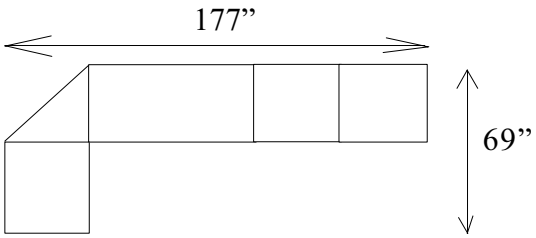

Ultima Series Trim Packages

Ordering a trim package is simple.
1. Select the Ultima service units you desire in your circulation desk arrangement.
2. Determine the total number of single width or small corner units, multiply by selected package upcharge.
3. Determine the total number of double or larger corner units, multiply by selected package upcharge.
4. Add the total single and double widths to determine the total trim package upcharge.

Slimline TM

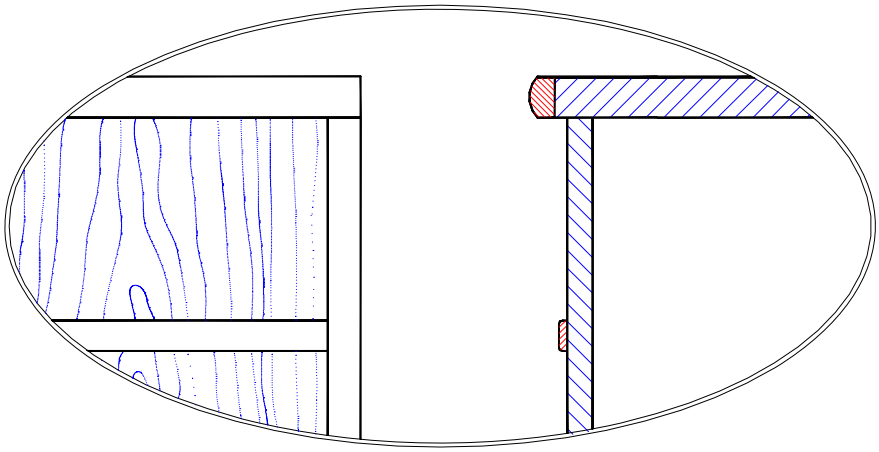

The Slimline package adds a solid red oak trim molding which is placed on the modesty (patron) panel and captured by the end panel. The molding is located 6" inches from the top. The molding is 15/16"W x 1/4" thick with 1/8" radius on the edges. Trim will be finished to match.

Crisscross TM

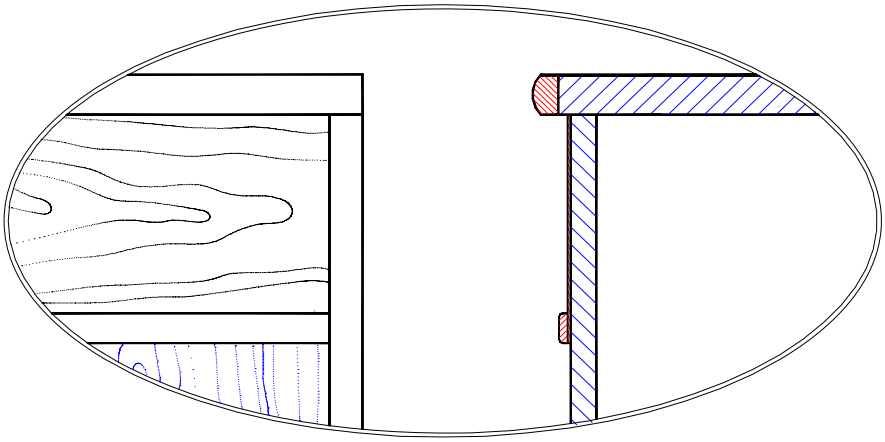

The Crisscross package adds an accent of 6"W red oak veneer placed horizontally to the modesty (patron) panel and captured by the end panels. Solid red oak molding trim is placed over the veneer seam. The trim molding is 15/16"W x 1/4" thick with 1/8" radius on the edges. Veneer and trim will be finished to match.

Spectre TM

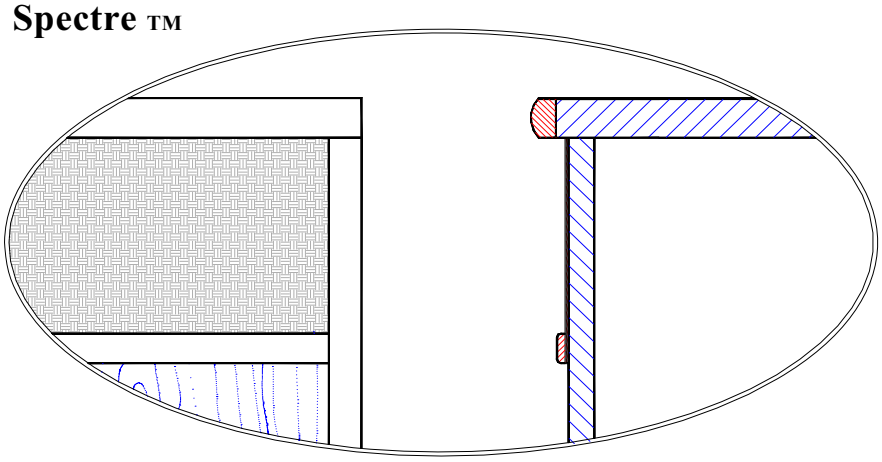

The Spectre package adds an accent of 6”W HPL laminate of your choice to the modesty (patron) panel and captured by the end panels. The trim molding is 15/16"W x 1/4" thick with 1/8" radius on the edges. Trim will be finished to match.

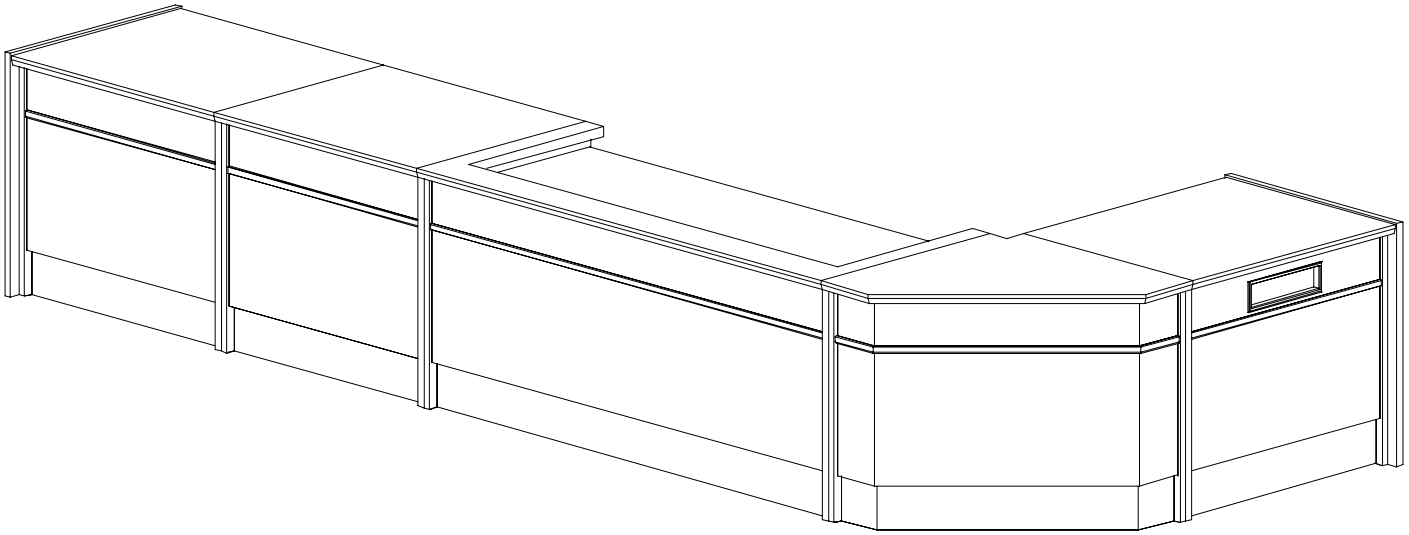

Catalog #	Description	Single W" unit upcharge $	Double"W unit upcharge $
SLU-1	Slimline Trim Package for Ultima Series		
CCU-1	Crisscross Trim Package for Ultima Series		
SPU-1	Spectre Trim Package for Ultima Series		
	To figure upcharge:	# Single units (x) upcharge per unit =	
		# Double units (x) upcharge per unit = + _____	
		Total upcharge $	

Contact your Russwood Dealer for any questions about Circ. Desk Trim Packages.

Cambre TM

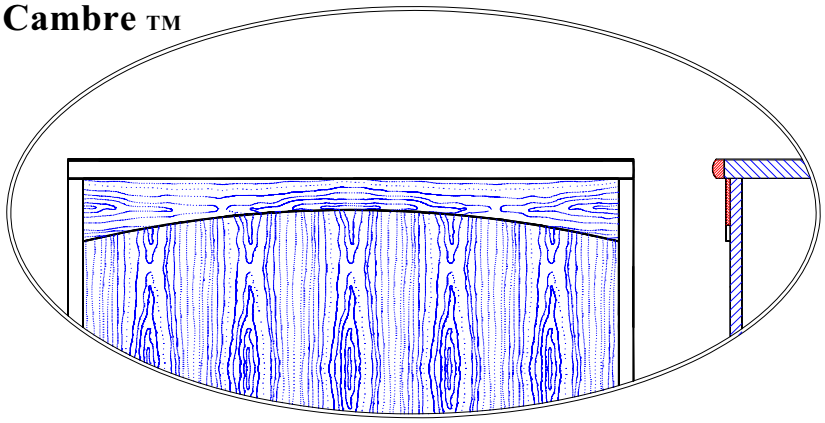

The Cambre package adds a 4"W x 1/4"T solid red oak trim with an arch on the bottom edges. The trim is added at the top of the modesty (patron) panel and is captured by the end panels. Arched trim will finished to match.

NOTE: This package is not available on radiused desk or corner units.

Canale TM

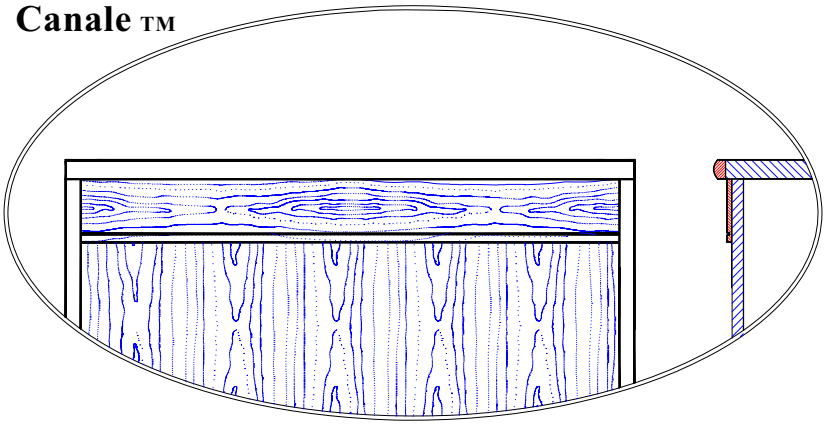

The Canale package adds a 4"W x 1/4"T solid red oak trim with a 1/8" x 1/8" reveal located 3/4" from the bottom of the trim. Reveal will be finished flat black. The trim is added at the top of the modesty (patron) panel and is captured by the end panels.
Trim will be finished to match.

NOTE: This package is not available on radiused desk or corner units.

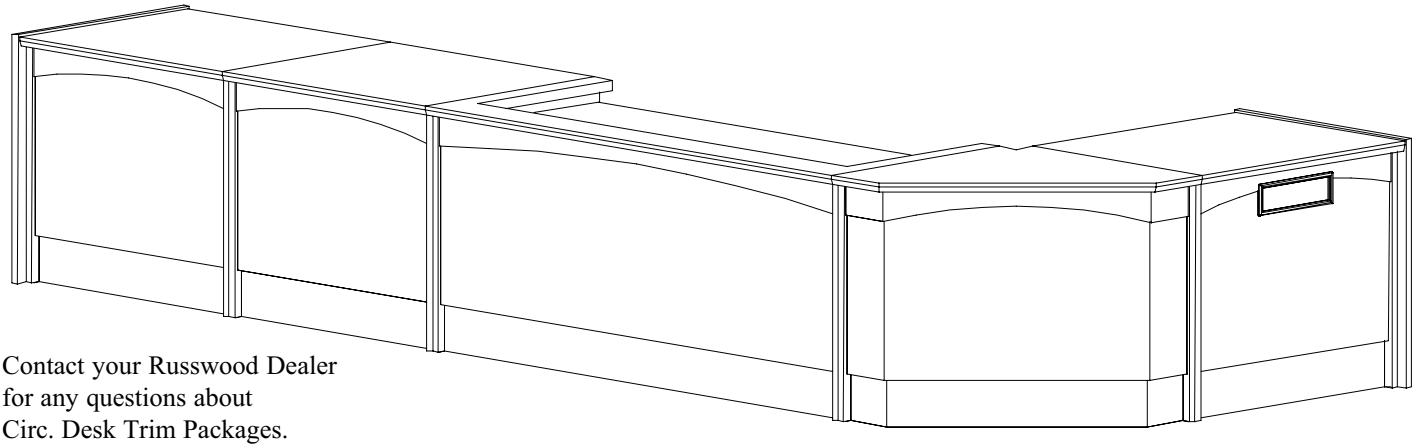

Contact your Russwood Dealer for any questions about Circ. Desk Trim Packages.

Catalog #	Description	Single W" unit upcharge $	Double"W unit upcharge $
CBU-1	Cambre Trim Package for Ultima Series		
CLU-1	Canale Trim Package for Ultima Series		
	To figure upcharge:	# Single units (x) upcharge per unit =	
		# Double units (x) upcharge per unit = + _____	
		Total upcharge $	

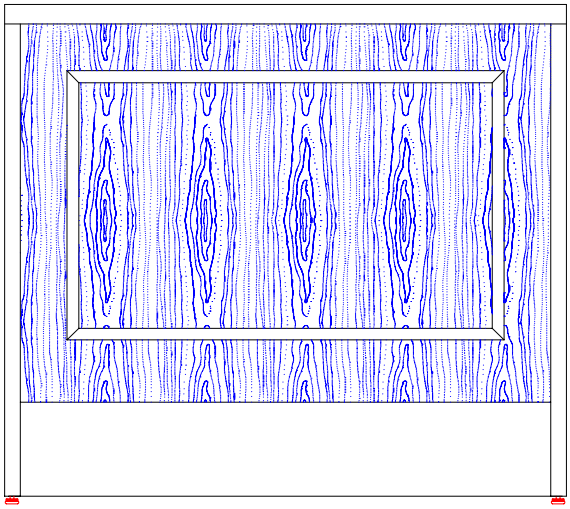

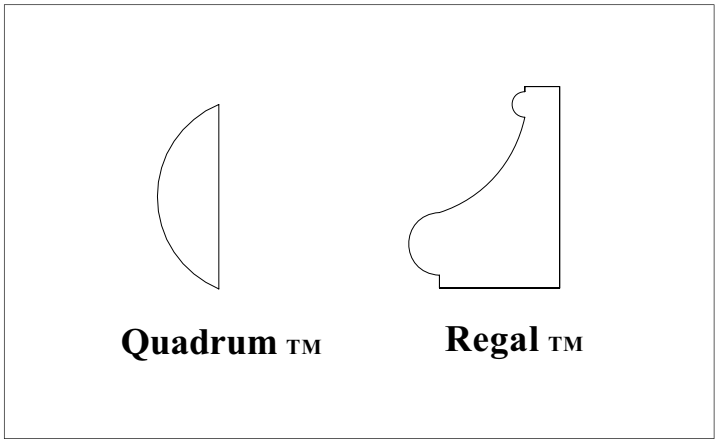

The Quadrum and Regal packages can be applied to any flat modesty panel or end panel. The treatment forms a rectangle that is about 3" from all edges. The trim package comes with the choice of two moldings. The edge details of these two moldings can be seen below. This treatment can be applied to the modesty or end panel of any Elite Series unit and can be applied to Traditional, Ultima, and Moduflex Circulation Desk. Note: this treatment is not available on radius units. On 36" circulation desks the modesty panels receives one such rectangle while a 72" unit would receive two such rectangles

NOTE: The Quadrum and Regal packages are not available on radiused desk or corner units.

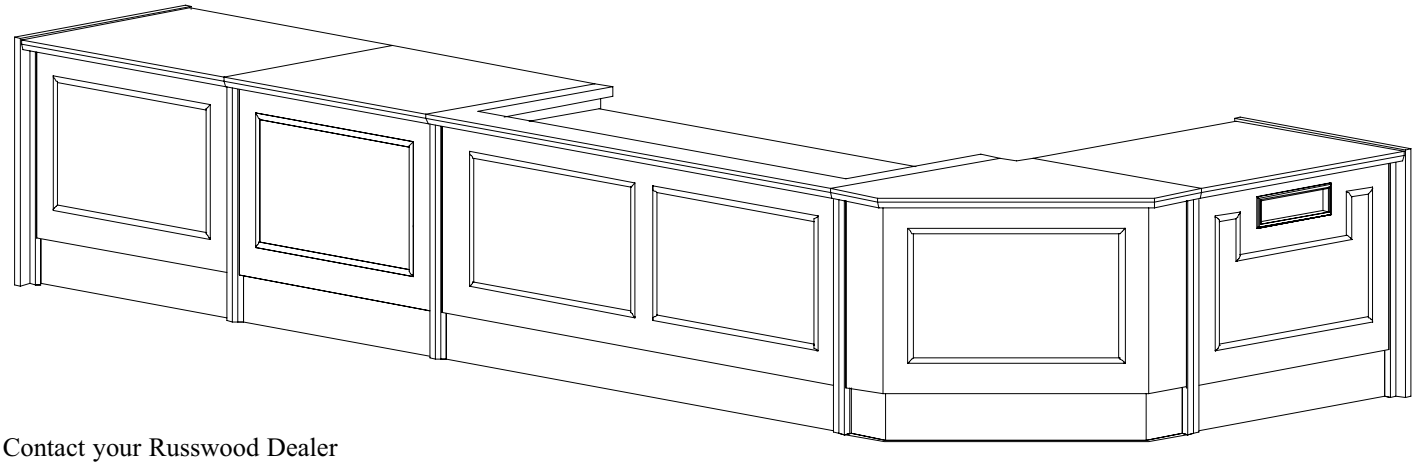

Contact your Russwood Dealer
for any questions about
Circ. Desk Trim Packages.

Catalog #	Description	Single W" unit upcharge $	Double"W unit upcharge $
QDU-1	Quadrum Trim Package for Ultima Series		
RGU-1	Regal Trim Package for Ultima Series		
	To figure upcharge:	# Single units (x) upcharge per unit =	
		# Double units (x) upcharge per unit = + _____	
		Total upcharge $	

For the ultimate in versatility...

Combine any of our desk units in this series with any of the following mobile units. Combining mobile units and desk units allows you to change the function of any of your circulation desk work stations at a moment's notice. Units with permanent features can be used with desks that use mobile units.

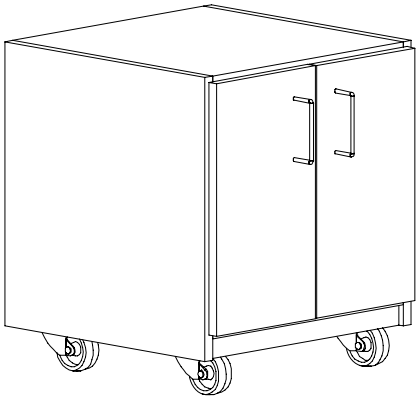

Mobile Cupboard Unit

This unit is supplied with two (2) shelves for the adult height and one (1) shelf for the elementary height. The back is supplied with grommets for wire management.

Catalog #	Description	Height"	Width"	Depth"	Price
A-27	Elementary height	26	25	20	
A-28	Adult height	36	25	20	

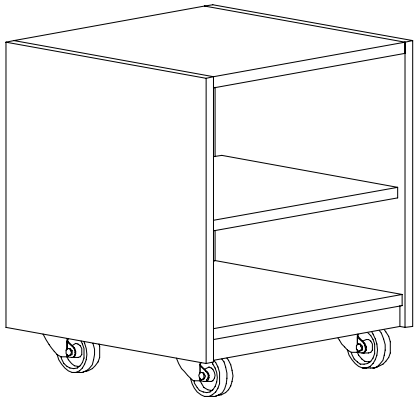

Mobile Open Shelf Unit

This unit is supplied with two (2) shelves for the adult height and one (1) shelf for the elementary height. The back is supplied with grommets for wire management.

Catalog #	Description	Height"	Width"	Depth"	Price
A-29	Elementary height	26	25	20	
A-30	Adult height	30	25	20	

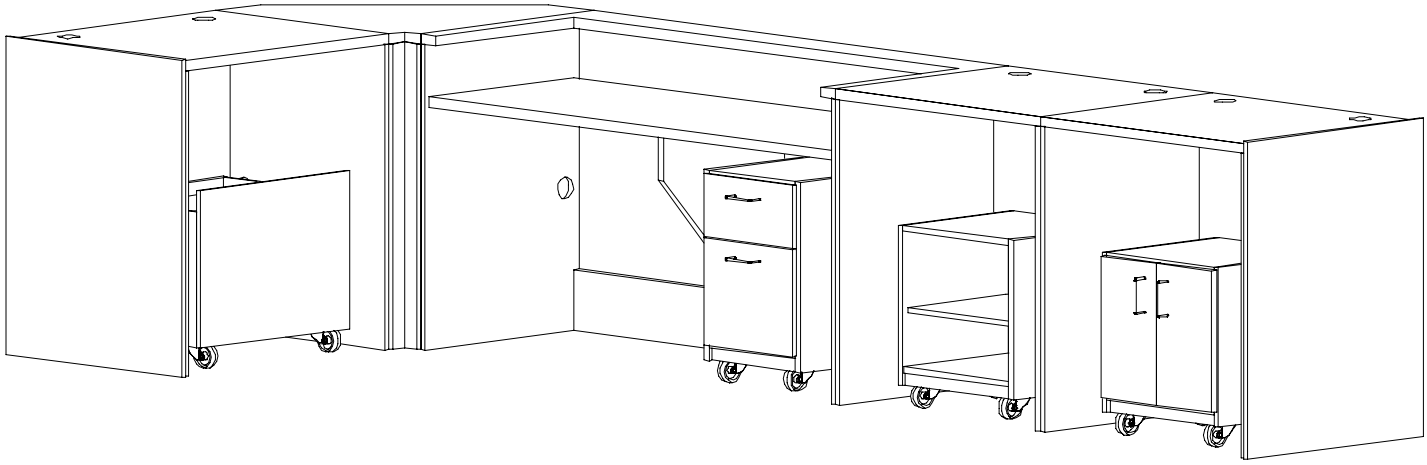

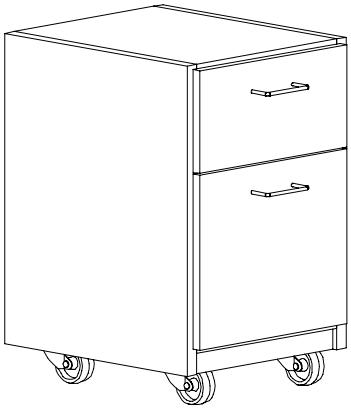

Mobile File Cabinet

The elementary height unit is supplied with (1) box and (1) file drawer. The intermediate height unit is supplied with (2) boxes and (1) file. The adult height unit is supplied with (1) box drawer and (2) file drawers. The box drawer is14-7/8”W x 18”D x 5-1/4”H. The file drawer is 14-7/8”W x 18”D x 10-1/2”H. The unit is counterbalanced so that it does not tip over under normal use when the file drawer is opened.

Catalog #	Description	Height"	Width"	Depth"	Price
A-23	Elementary height	25	17	19	
A-23A	Intermediate height	31	17	19	
A-23B	Adult height	36	17	19	

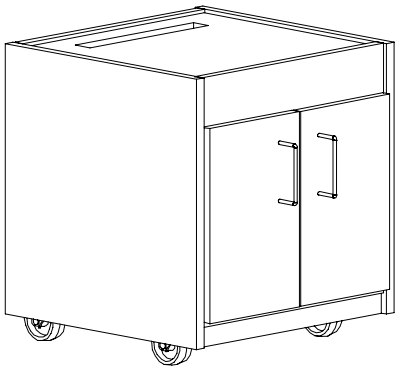

Mobile Printer Stand

Unit end panels are constructed of 1”T red oak veneer plywood. All other components are constructed with 3/4”T red oak veneer plywood. Unit is supplied with one (1) adjustable shelf and one (1) base shelf. The shelf is 22-134”W x 17”D x 3/4”T. Adj. Shelf is notched for wiring management. All exposed edges are edgebanded with 1/4”T solid red oak. Doors have satin chrome pulls. The bottom is supplied with a grommet for wire management. Wheels are 210 lbs rated ball-bearing swivel casters. The top is removable and is slotted for printer paper.

Catalog #	Description	Height"	Width"	Depth"	Price
A-24	Universal height	21	21	19	

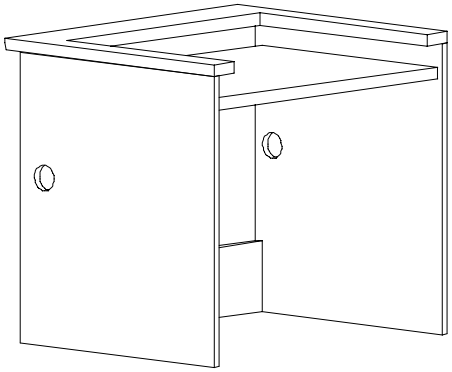

Patron Desk Unit

Unit will have a recessed work surface measuring 34"W x 27-1/4”D, fastened with metal cleats (work surface height - 29"). Work surface grommet, centered along length unless otherwise specified. The recessed work surface will have a 1/4” thick, solid wood, internal edgeband. Patron ledge is 6” deep.

Catalog #	Description	Height"	Width"	Depth"	Price
CDU-3202	Elementary Height	32	36	30	
CDU-3902	Adult Height	39	36	30	

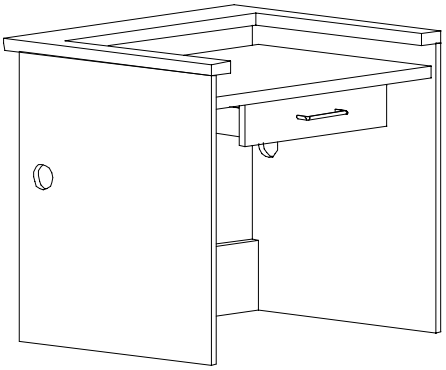

Patron Desk With Pencil Drawer Unit

Unit will have a recessed work surface measuring 34"W x 27-1/2”D, fastened with metal cleats. (adult work surface height - 29"). Work surface grommet, centered along length unless otherwise specified. The exposed edge of the recessed work surface will have a 1/4” thick, solid wood, internal edgeband. Patron ledge is 6” deep. The pencil drawer is centered under the work surface and 18"W x 14-7/8"D x 3"H.

Catalog #	Description	Height"	Width"	Depth"	Price
CDU-3235	Elementary Height	32	36	30	
CDU-3935	Adult Height	39	36	30	

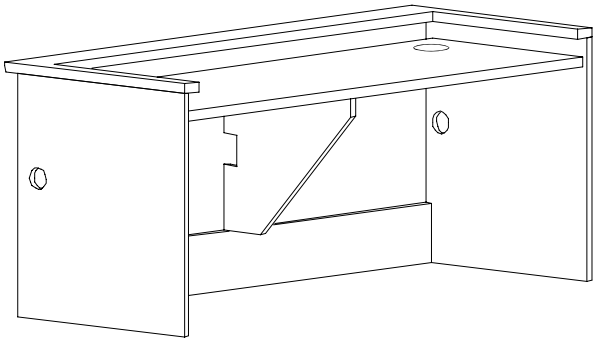

Double-Width Patron Desk Unit

Each unit will have a recessed work surface measuring 70”W x 27-1/4”D, fastened with metal cleats to provide an adult work surface height of 29”H. This unit is supplied with two (2) work surface grommets located toward each end unless otherwise specified. The recessed work surface will receive a 1/4” thick, solid wood, internal edgeband. The work surface will be supported at midspan with a 1” thick stiffknee that rests on top of the toe board. Patron ledge is 6” deep.

Catalog #	Description	Height"	Width"	Depth"	Price
CDU-3203	Elementary Height	32	72	30	
CDU-3903	Adult Height	39	72	30	

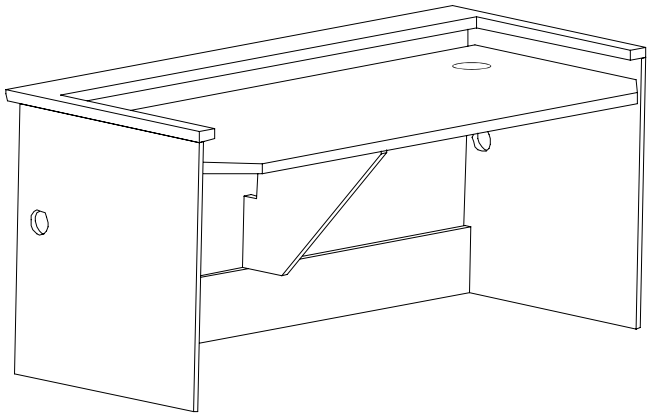

Double-Width Extended Depth Patron Desk Unit

Each unit will have a recessed work surface measuring 70”W x 27-1/4”D, fastened with metal cleats to provide an adult work surface height of 29”H. This unit is supplied with two (2) work surface grommets located toward each end unless otherwise specified. The recessed work surface will receive a 1/4” thick, solid wood, internal edgeband. The work surface will be supported at midspan with a 1” thick stiffknee that rests on top of the toe board. Patron ledge is 6” deep.

Catalog #	Description	Height"	Width"	Depth"	Price
CDU-3203E	Elementary Height	32	72	32-1/2	
CDU-3903E	Adult Height	39	72	32-1/2	

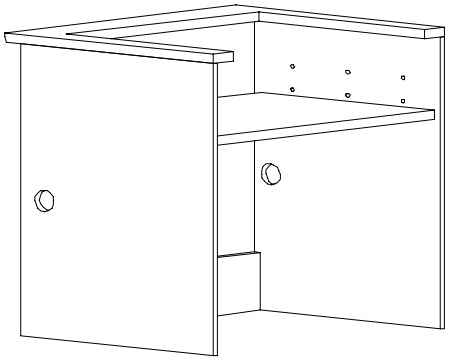

Patron Desk with adjustable work surface

Unit will have a recessed work surface measuring 34"W x 27-1/4”D, fastened with metal cleats and threaded inserts. The work surface is adjustable to accommodate a variety of possible needs. On the adult height unit, the work surface possibilities are 29”H, 32”H, and 39”H. On the elementary height unit, the work surface possibilities are 27”H, and 29”H. The patron ledge is 6”D . Work surface grommet, centered along length unless otherwise specified.

Catalog #	Description	Height"	Width"	Depth"	Price
CDU-3248	Elementary Height	32	36	30	
CDU-3948	Adult Height	39	36	30	

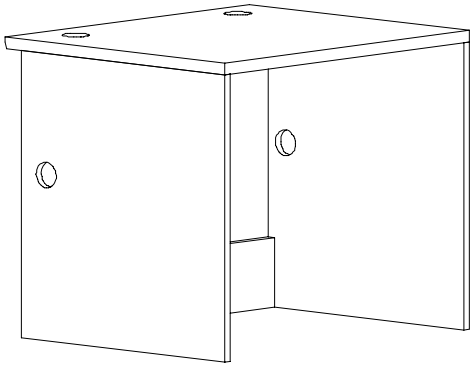

Desk Unit

Each unit will have inside dimensions of 34”W x 27-1/2”D. Two work surface grommet placed along front edge unless otherwise specified.

Catalog #	Description	Height"	Width"	Depth"	Price
CDU-3234	Elementary Height	32	36	30	
CDU-3934	Adult Height	39	36	30	

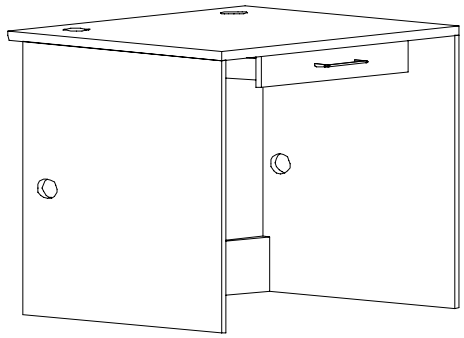

Desk With Pencil Drawer Unit

Each unit will have inside dimensions of 34”W x 27-1/2”D. Work surface grommet placed along patron length on each end unless otherwise specified. The pencil drawer is centered under the work surface and 18"W x 14-7/8"D x 3"H.

Catalog #	Description	Height"	Width"	Depth"	Price
CDU-3247	Elementary Height	32	36	30	
CDU-3947	Adult Height	39	36	30	

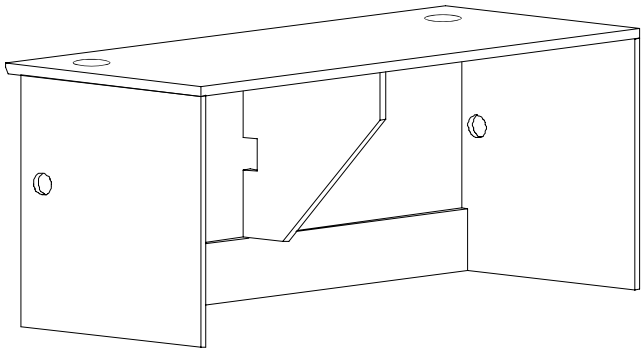

Double Width Desk Unit

Each unit will have inside dimensions of 70”W x 27-1/2”D. Work surface grommet placed along patron length on each end unless otherwise specified. The work surface will be supported at midspan with a 1" thick stiffknee that rests on top of the toe board.

Catalog #	Description	Height"	Width"	Depth"	Price
CDU-3253	Elementary Height	32	72	30	
CDU-3953	Adult Height	39	72	30	

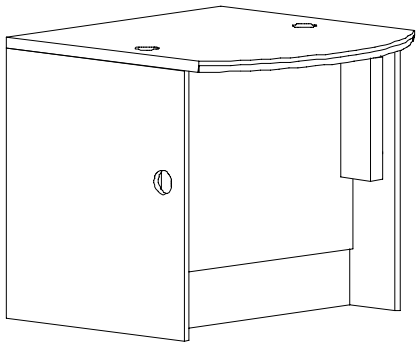

ADA Transaction Unit

The unit will have modesty panel mounted along the midline and supplied with two (2) grommets located at each end of the work surface unless otherwise specified. The work surface on all height units will be 32”H. A wire chase is provided for wire concealment.

ADA Desk Note: 1) When an ADA unit is used on one end of an adult height circulation desk, an elementary finished end panel should be ordered for that end. 2) When an ADA unit is placed between other adult units the work surface is captured rather than continuous.

Catalog #	Description	Height"	Width"	Depth"	Price
CDU-3220	ADA max 32"H (both Elem. And Adult)	32	36	36	

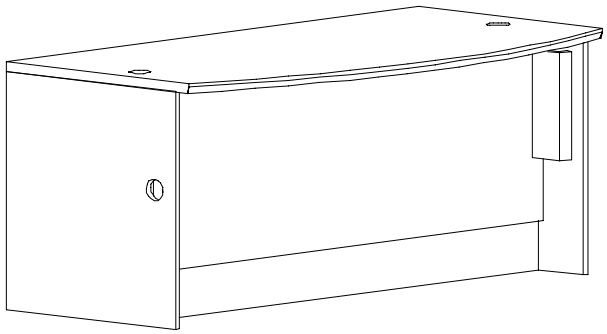

Double Width ADA Transaction Unit

Unit will have a modesty panel mounted along unit midline and is supplied with two (2) work surface grommets located at each end unless otherwise specified. The work surface on both heights is 32”. A wire chase is provided for wire concealment.

ADA Desk Note: 1) When an ADA unit is used on one end of an adult height circulation desk, an elementary finished end panel should be ordered for that end. 2) When an ADA unit is placed between other adult units the work surface is captured rather than continuous.

Catalog #	Description	Height"	Width"	Depth"	Price
CDU-3221	ADA max height 32"H	32	72	36	

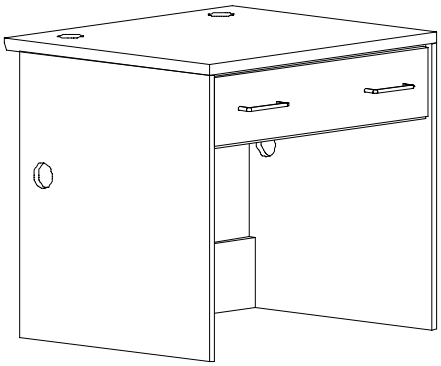

Single Drawer Knee Space Unit

The inside dimensions of the unit are 34"W x 27-1/2"D. The unit is supplied with a 31-1/2”W x 18”D x 5-1/4”H storage drawer.

Catalog #	Description	Height"	Width"	Depth"	Price
CDU-3236	Elementary Height	32	36	30	
CDU-3936	Adult Height	39	36	30	

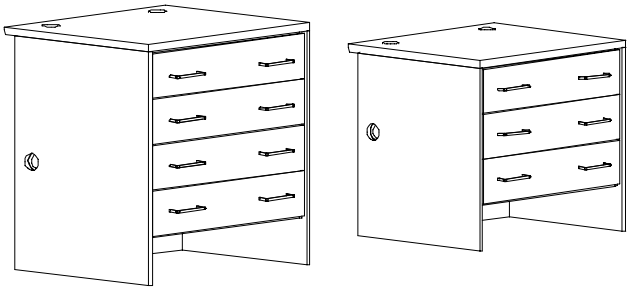

Single Drawer Stack Unit

This unit will consist of a stack of full width drawers 31-1/2”W x 18”D x 5-1/4”H. The adult height units will receive four (4) drawers and the elementary unit will receive three (3) drawers.

Catalog #	Description	Height"	Width"	Depth"	Price
CDU-3222	Elementary Height	32	36	30	
CDU-3922	Adult Height	39	36	30	

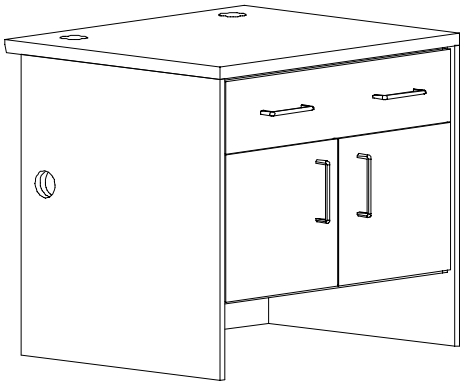

Single Drawer Cupboard Unit

The unit is supplied with a 31-1/2”W x 5-1/4”H x 18”D storage drawer over cupboard storage space. The adult height unit is supplied with two (2) adjustable shelves. The elementary height unit is supplied with one (1) adjustable shelf. Shelf is 34-1/4”W x 23”D x 3/4”T

Catalog #	Description	Height"	Width"	Depth"	Price
CDU-3237	Elementary Height	32	36	30	
CDU-3937	Adult Height	39	36	30	

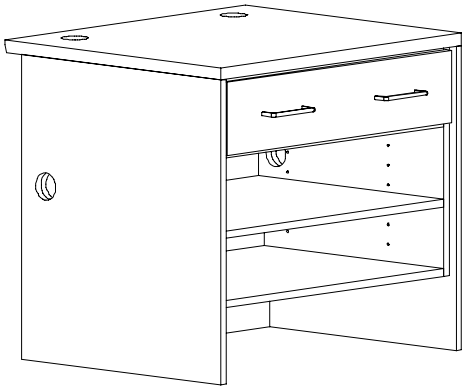

Single Drawer Open Shelf Unit

Unit is supplied with a full-width, 31-1/2”W x 5-1/4”H x 18”D storage drawer over open shelving. Adult units are supplied with two full-depth, adjustable shelves. The elementary height unit is supplied with one full-depth, adjustable shelf. Shelf size is 32-1/4”W x 23”D x 3/4”T

Catalog #	Description	Height"	Width"	Depth"	Price
CDU-3246	Elementary Height	32	36	30	
CDU-3946	Adult Height	39	36	30	

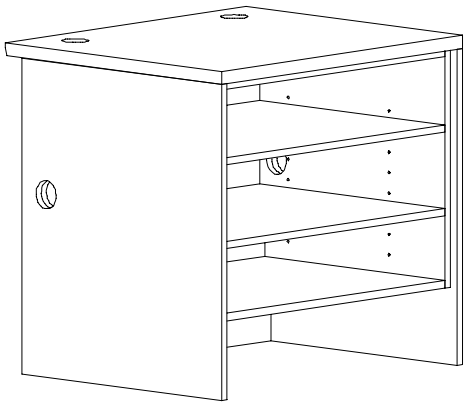

Open Shelf Unit

Adult units will be supplied with two full-depth, adjustable shelves. Elementary height units will be supplied with one shelf. Shelf size is 32-1/4”W x 23”D x 3/4”T

Catalog #	Description	Height"	Width"	Depth"	Price
CDU-3208	Elementary Height	32	36	30	
CDU-3908	Adult Height	39	36	30	

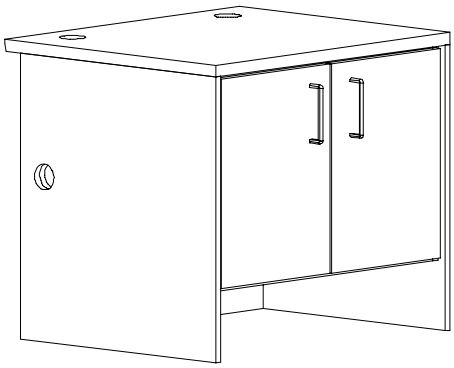

Cupboard Unit

Adult height units are supplied with two full-depth, adjustable shelves. Elementary height units will be supplied with one shelf. Shelf size is 32-1/4”W x 23”D x 3/4”T. Hinged doors will have one lock and door pulls.

Catalog #	Description	Height"	Width"	Depth"	Price
CDU-3210	Elementary Height	32	36	30	
CDU-3910	Adult Height	32	36	30	

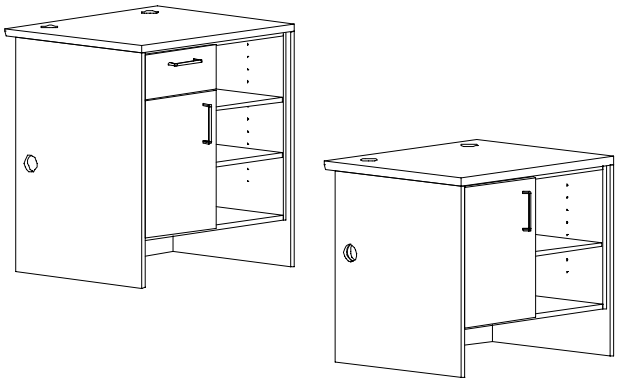

Left Cupboard Open Shelf Unit

Cupboard on left side, open shelves on the right. Only the adult unit will be supplied with a locking box drawer. The adult cupboard unit will have two (2) adjustable shelves; the elementary unit will only be supplied with one (1) adjustable shelf (no drawer). In the open space, the adult unit will be supplied with two (2) adjustable shelves, the elementary height unit will be supplied with one (1) adjustable shelf. The shelf is 15-5/8”W x 23”D x 3/4”T. Box drawer will be 14-7/8”W x 18”D x 5-1/4”H.

Catalog #	Description	Height"	Width"	Depth"	Price
CDU-3243	Elementary Height	32	36	30	
CDU-3943	Adult Height	39	36	30	

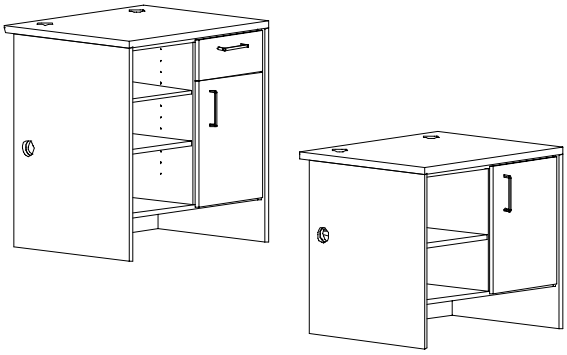

Right Cupboard Open Shelf Unit

Cupboard on right side, open shelves on the left. Only the adult unit only will be supplied with a locking box drawer on right side. The adult cupboard unit will have two (2) adjustable shelves; the elementary unit will only be supplied with one (1) adjustable shelf (no drawer). In the open space, the adult unit will be supplied with two (2) adjustable shelves, the elementary height unit will be supplied with one (1) adjustable shelf. The shelf is 15-5/8”W x 23”D x 3/4”T. Box drawer will be 14-7/8”W x 18”D x 5-1/4”H.

Catalog #	Description	Height"	Width"	Depth"	Price
CDU-3242	Elementary Height	32	36	30	
CDU-3942	Adult Height	39	36	30	

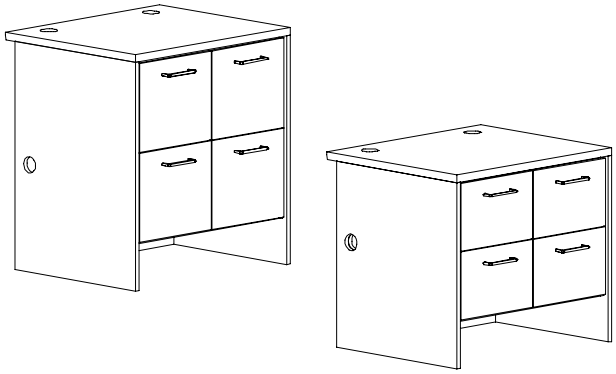

Double Drawer Stack Unit

This unit consist of a double stack of drawers. The adult height unit takes four file drawers. The elementary has two box drawers and two file drawers. The box drawer is 14-7/8"W x 18"D x 5-1/4"H. The file drawer is 14-7/8"W x 18"D x 10.5"H.

Catalog #	Description	Height"	Width"	Depth"	Price
CDU-3229	Elementary Height	32	36	30	
CDU-3929	Adult Height	39	36	30	

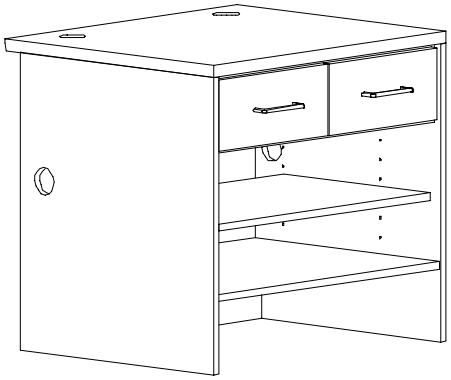

Double-Drawer Open Shelf Unit

Each unit is supplied with two equal-width drawers over open shelving. Adult height units will be supplied with two full-depth adjustable shelves. Elementary height units will be supplied with one shelf. The box drawer is 14-7/8”W x 18”D x 5-1/4”H. The shelf is 32-1/4”W x 23”D x 3/4”T. Top right drawer will receive a lock unless otherwise specified.

Catalog #	Description	Height"	Width"	Depth"	Price
CDU-3207	Elementary Height	32	36	30	
CDU-3907	Adult Height	39	36	30	

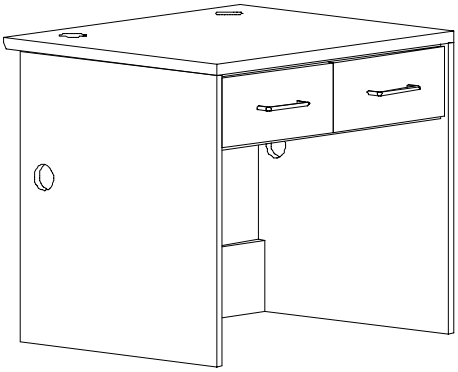

Double Drawer Knee Space Unit

Each unit is supplied with two equal-width drawers, each measuring 14-7/8”W x 18”D x 5-1/4”H. Inside dimensions are 34”W x 27-1/2”D. Top right drawer will receive a lock unless otherwise specified.

Catalog #	Description	Height	Width	Depth	Price
CDU-3209	Elementary Height	32	36	30	
CDU-3909	Adult Height	39	36	30	

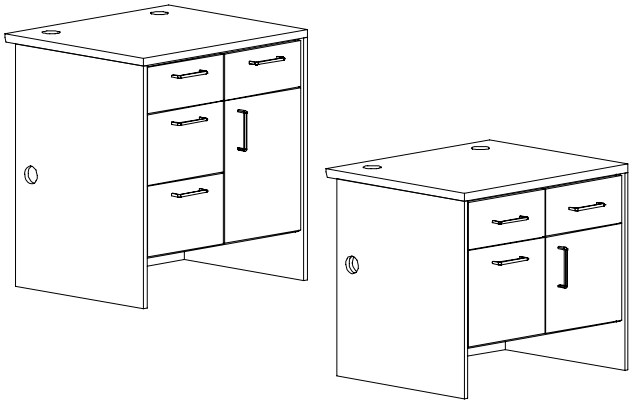

Double Drawer, *Right* Cupboard & File Unit

Cupboard on right, file drawer on left. Each adult height unit will have 2 box drawers, 2 file drawers and 2 adjustable shelves inside the cupboard. Elementary height units have 1 box drawer, 1 file drawer and 1 adjustable shelf. The top drawers and cupboard door will have a lock. The box drawers are 14-7/8”W x 18”D x 5-1/4”H. The file drawers are 14-7/8”W x 18”D x 10-1/2”H. The shelf is 15-5/8”W x 23”D x 3/4”T.

Catalog #	Description	Height"	Width"	Depth"	Price
CDU-3241	Elementary Height	32	36	30	
CDU-3941	Adult Height	39	36	30	

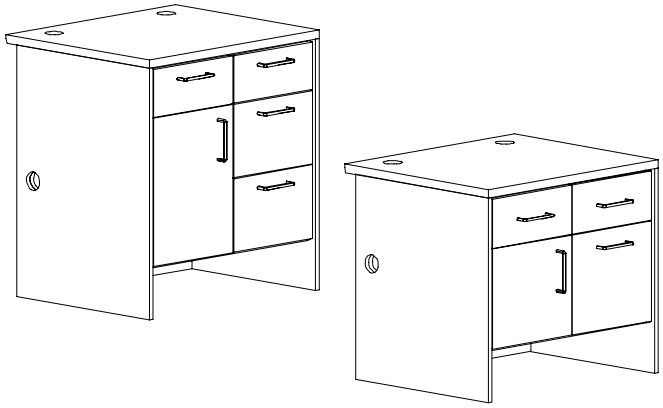

Double Drawer, *Left* Cupboard & File Unit

Cupboard on left, file drawer on right. Each adult height unit will have 2 box drawers, 2 file drawers and 2 adjustable shelves inside the cupboard. Elementary height units have 1 box drawer, 1 file drawer and 1 adjustable shelf. The top drawers and cupboard door will have a lock. The box drawers are 14-7/8”W x 18”D x 5-1/4”H. The file drawers are 14-7/8”W x 18”D x 10-1/2”H. The shelf is 15-5/8”W x 23”D x 3/4”T.

Catalog #	Description	Height"	Width"	Depth"	Price
CDU-3254	Elementary Height	32	36	30	
CDU-3954	Adult Height	39	36	30	

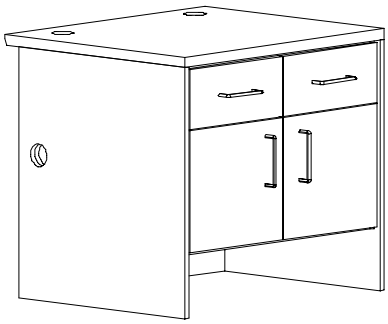

Double Drawer Cupboard Unit

Unit is supplied with two equal-width storage drawers, each measuring 14-7/8”W x 18”D x 5-1/4”H. Right side drawer and doors will have locks unless otherwise specified. These drawers will be mounted over a cupboard storage space. The adult height units are supplied with two (2) adjustable shelves. The elementary height unit is supplied with one (1) adjustable shelf. The shelf is 32-1/4”W x 23”D x 3/4”T.

Catalog #	Description	Height"	Width"	Depth"	Price
CDU-3238	Elementary Height	32	36	30	
CDU-3938	Adult Height	39	36	30	

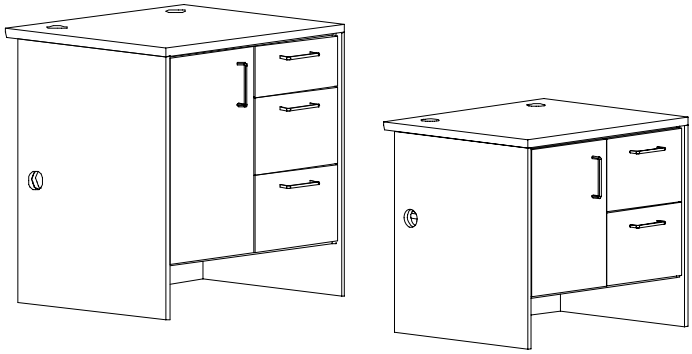

Left Cupboard File Drawer Unit

Cupboard on left side, drawers on right side. Each adult height unit will have two (2) file drawers, one (1) box drawers and two (2) adjustable shelves in the cupboard. Elementary height units have one (1) box drawer, one (1) file drawer and one (1) adjustable shelf in the cupboard. The top drawer and cupboard door will receive a lock. The box drawers are 14-7/8”W x 18”D x 5-1/4”H. The file drawers are 14-7/8”W x 18”D x 10-1/2”H. The shelf is 15-5/8”W x 23”D x 3/4”T.

Catalog #	Description	Height"	Width"	Depth"	Price
CDU-3240	Elementary Height	32	36	30	
CDU-3940	Adult Height	39	36	30	

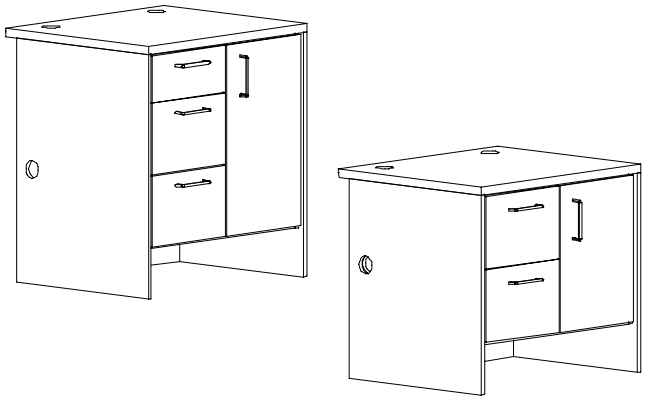

Right Cupboard File Drawer Unit

Cupboard on right side, drawers on left side. Each adult height unit will have two (2) file drawers, one (1) box drawers and two (2) adjustable shelves in the cupboard. Elementary height units have one (1) box drawer, one (1) file drawer and one (1) adjustable shelf in the cupboard. The top drawer and cupboard door will receive a lock. The box drawers are 14-7/8”W x 18”D x 5-1/4”H. The file drawers are 14-7/8”W x 18”D x 10-1/2”H. The shelf is 15-5/8”W x 23”D x 3/4”T.

Catalog #	Description	Height"	Width"	Depth"	Price
CDU-3239	Elementary Height	32	36	30	
CDU-3939	Adult Height	39	36	30	

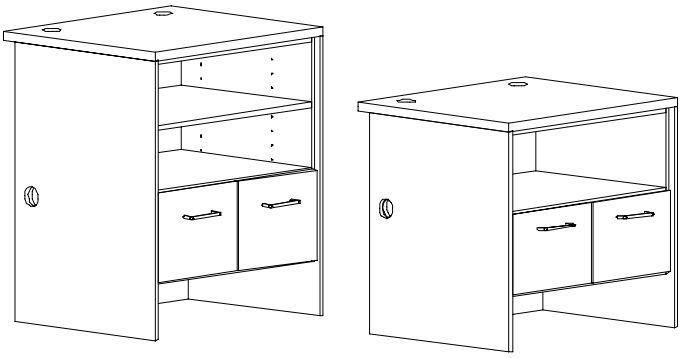

Two-Drawer File Open Top Shelf Unit

Each unit is an Open Shelf Unit with two letter file drawers. Adult height units are supplied with one full-depth, adjustable shelves. Elementary height units will not have an adjustable shelf. The shelf is 32-1/4”W x 23”D x 3/4”T. The file drawer is 14-7/8”W x 18”D x 10-1/2”H.

Catalog #	Description	Height"	Width"	Depth"	Price
CDU-3914	Elementary Height	32	36	30	
CDU-3214	Adult Height	39	36	30	

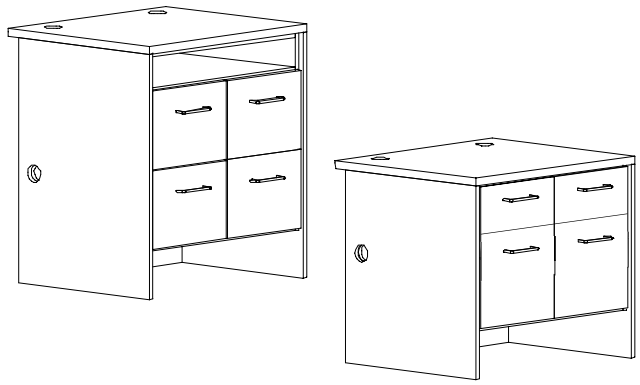

File Drawer Open Top Unit

The adult unit is supplied with four (4) file drawers with an open shelf space above them. The elementary unit is supplied with two (2) box drawers and two (2) file drawers with no open space above them The box drawers are 14-7/8"W x 18"D x 5-1/4"H. The file drawers are 14-7/8"W x 18"D x 10-1/2"H. Top right drawer receive lock unless otherwise specified.

Catalog #	Description	Height"	Width"	Depth"	Price
CDU-3215	Elementary Height	32	36	30	
CDU-3915	Adult Height	39	36	30	

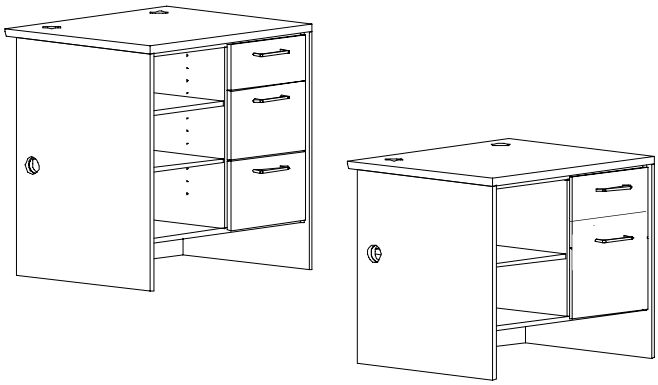

Right File Drawer Open Shelf Unit

Right side file drawers, left side open shelf. Adult height unit will have one (1) box drawer, (2) file drawers and (2) adjustable shelves. Elementary height units will have (1) box drawer, (1) file drawer and (1) adjustable shelf. The top drawer on both heights will receive a lock. The box drawers are 14-7/8”W x 18”D x 5-1/4H. The file drawers are 14-7/8”W x 18”D 10-1/2”H. The shelf is 15-5/8”W x 23”D x 3/4”T

Catalog #	Description	Height"	Width"	Depth"	Price
CDU-3245	Elementary Height	32	36	30	
CDU-3945	Adult Height	39	36	30	

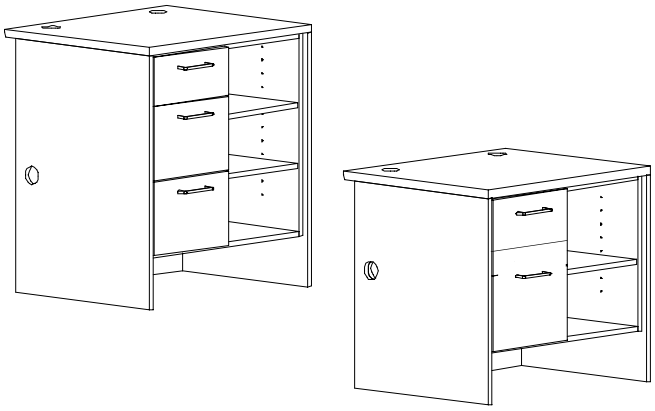

Left File Drawer Open Shelf Unit

Left side file drawers, right side open shelf. Adult height unit will have one (1) box drawer, (2) file drawers and (2) adjustable shelves. Elementary height units will have (1) box drawer, (1) file drawer and (1) adjustable shelf. The top drawer on both heights will receive a lock. The box drawers are 14-7/8”W x 18”D x 5-1/4”H. The file drawers are 14-7/8”W x 18”D 10-1/2”H. The shelf is 15-5/8”W x 23”D x 3/4”T

Catalog #	Description	Height"	Width"	Depth"	Price
CDU-3244	Elementary Height	32	36	30	
CDU-3944	Adult Height	39	36	30	

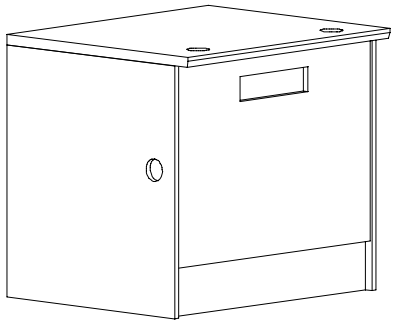

Book Return Unit

Inside dimensions are 34”W x 27-1/2”D. The front panel will have a 3"H x 12"W book-return slot, fully edgebanded, with an internal wood chute so as to allow gentle deposit of books into book truck. A rear-mounted 3/4”T edgebanded wood book chute allows for the gentle deposit of reading materials. (See below for depressible book trucks - BT-D39 for adult-height units or BT-D32 for elementary-height units).

Catalog #	Description	Height"	Width"	Depth"	Price
CDU-3205	Elementary Height	32	36	30	
CDU-3905	Adult Height	39	36	30	

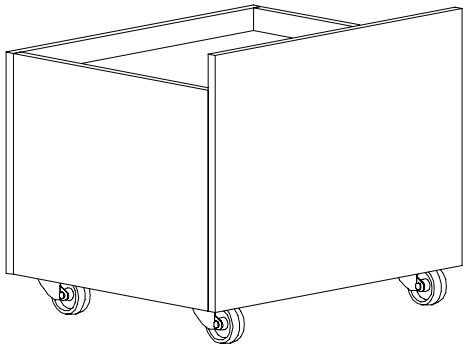

Depressible Book Truck

Each unit will have a depressible platform that will hold approximately 70 books. Each unit will have four 3" swivel casters mounted directly to a 3/4”T red oak veneer plywood bottom using 5/16” dia bolts with are received on the top size of plywood via T-nuts.

Catalog #	Description	Height"	Width"	Depth"	Price
BT-D32	Elementary height	22	26	22	
BT-D39	Adult height	29	26	22	

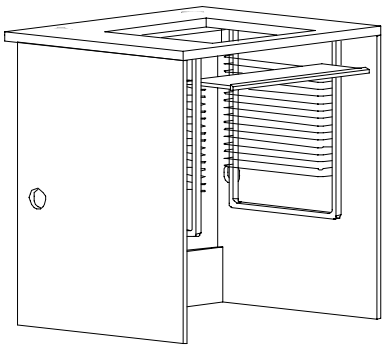

NOVA Unit

Each unit will have a NOVA assembly mounted to the underside of the work surface to accommodate a computer monitor, and pullout keyboard tray. A corresponding 18-1/4”L x 18-1/4”W viewport will be machined into the continuous top to accommodate monitor viewing.

Catalog #	Description	Height"	Width"	Depth"	Price
CDU-3230	Elementary Height	32	36	30	
CDU-3930	Adult Height	39	36	30	

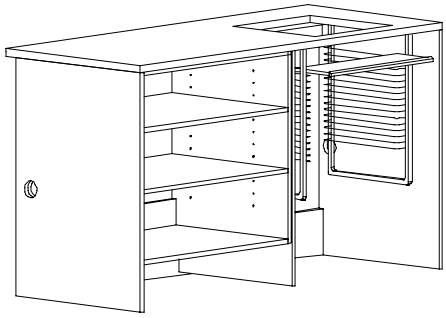

NOVA Open Shelf Unit

Each unit will have a NOVA assembly mounted to the underside of the work surface to accommodate a computer monitor, and pullout keyboard tray. A corresponding 18-1/4”L x 18-1/4”W viewport will be machined into the work surface to accommodate monitor viewing. Adult height units will have two (2) adjustable shelves and elementary height units will have one (1) adjustable shelf. The shelf is 34-1/4”W x 23”D x 3/4”T

Catalog #	Description	Height"	Width"	Depth"	Price
CDU-3231	Elementary Height	32	72	30	
CDU-3931	Adult Height	39	72	30	

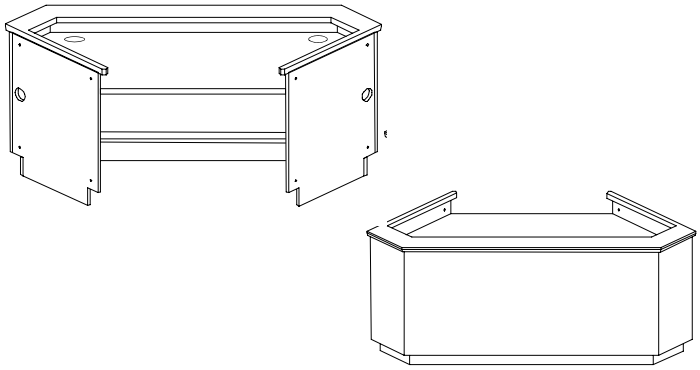

Corner Patron Desk Unit

Each unit is designed to provide a 90-degree transition in any desk arrangement, while providing a corner work space with a recessed work surface and patron ledge. The recessed work surface will be mounted at 29”H using metal cleats. The working width for staff-side accessibility will be 35”W. This unit is supplied with two (2) work surface grommets located at each end unless otherwise specified. The patron ledge is 6” deep.

Catalog #	Description	Height"	Width"	Depth"	Price
CDU-3232	Elementary Height	32	78-1/2	30	
CDU-3932	Adult Height	39	78-1/2	30	

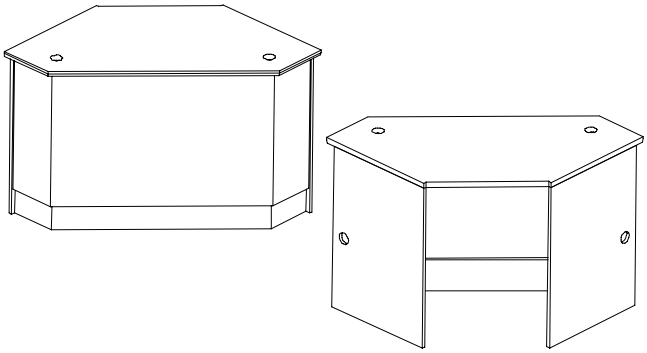

Corner Desk Unit

Each unit is designed to provide a 90-degree transition in any desk arrangement. The working width for staff-side accessibility will be 35”W. This unit is supplied with two (2) work surface grommets located on the patron side at each end unless otherwise specified.

Catalog #	Description	Height"	Width"	Depth"	Price
CDU-3233	Elementary Height	32	78-1/2	30	
CDU-3933	Adult Height	39	78-1/2	30	

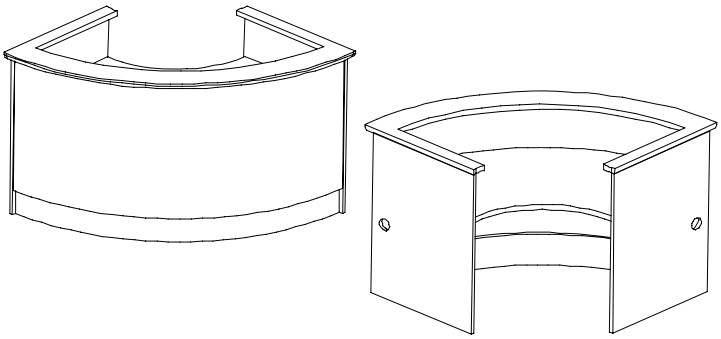

90 Degree Curved Patron Desk Unit

Each unit is designed to provide a radiused 90-degree transition in any desk arrangement, while providing a corner work space with a recessed work surface and patron ledge. The recessed work surface will be mounted at 29”H using metal cleats. The working width for staff-side accessibility will be 35”W. This unit is supplied with two (2) work surface grommets located at each end unless otherwise specified. The patron ledge is 6”D.

Catalog #	Description	Height"	Width"	Depth"	Price
CDU-3250	Elementary Height	32	78-1/2	30	
CDU-3950	Adult Height	39	78-1/2	30	

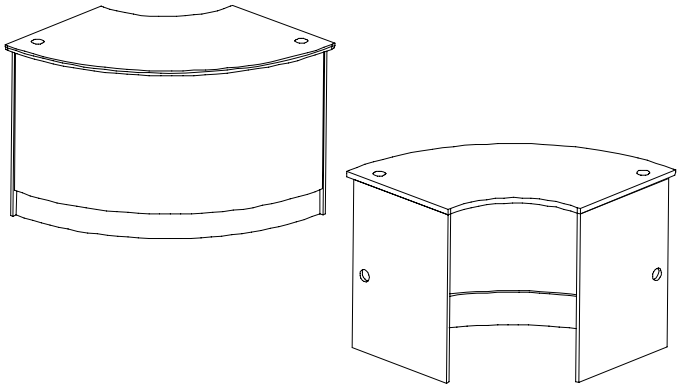

90 Degree Curved Desk Unit

Each unit is designed to provide a radiused 90-degree transition in any desk arrangement, while providing a corner work space. The working width for staff-side accessibility will be 35”W. This unit is supplied with two (2) work surface grommets located at each end unless otherwise specified.

Catalog #	Description	Height"	Width"	Depth"	Price
CDU-3251	Elementary Height	32	78-1/2	30	
CDU-3951	Adult Height	39	78-1/2	30	

It is possible to store the mind with a million facts and still be entirely uneducated.

Alec Bourne

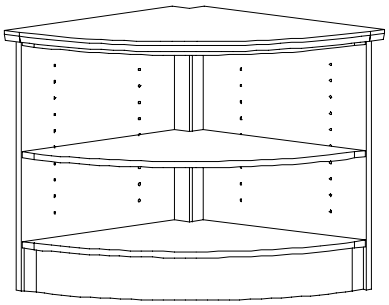

90 Degree Radiused Open Shelf Corner Unit

Each unit will be triangular, with a radiused, open-face design and will be used to form a 90-degree transition in any desk arrangement. Adult height units will be supplied with two (2) adjustable shelves and elementary height units will be supplied with one (1) adjustable shelf. Open shelf corner units do not provide for wire access. Shelves will be accessible from patron side of circulation desk.

Catalog #	Description	Height"	Width"	Depth"	Price
CDU-3228	Elementary Height	32	33	33	
CDU-3928	Adult Height	39	33	33	

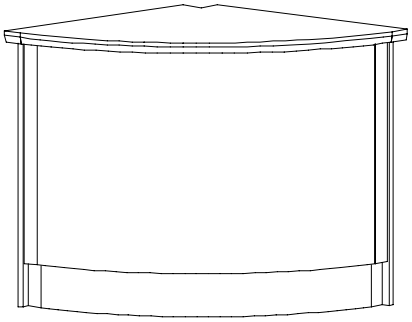

90 Degree Radiused Closed Corner Unit

Each unit will be triangular, with a radiused, closed-face design and will be used to form a 90-degree transition in any desk arrangement. This unit is supplied with an internal wire manager unless otherwise specified.

Catalog #	Description	Height"	Width"	Depth"	Price
CDU-3226	Elementary Height	32	33	33	
CDU-3926	Adult Height	39	33	33	

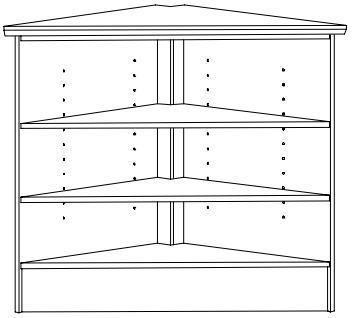

90 Degree Flat-Front Open Shelf Corner Unit

Each unit will be triangular with a flat open-front design and will be used to form a 90-degree transition in any desk arrangement. Each unit will have one (1) fixed base shelf and adjustable shelves according to unit height. Adult units will be supplied with two (2) adjustable shelves and elementary height units will be supplied with one (1) adjustable shelf. Shelves will be accessible from patron side of circulation desk. Open shelf corner units do not provide for wire access.

Catalog #	Description	Height"	Width"	Depth"	Price
CDU-3223	Elementary Height	32	33	33	
CDU-3923	Adult Height	39	33	33	

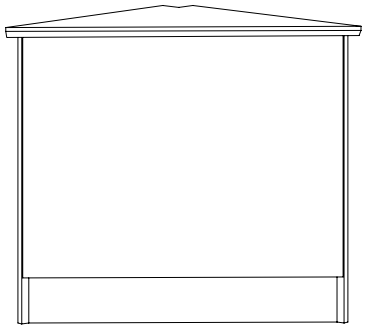

90 Degree Flat Front Closed Corner Unit

Each unit will be triangular with a flat closed -front design and will be used to form a 90-degree transition in any desk arrangement. This unit is supplied with an internal wire manager unless otherwise specified.

Catalog #	Description	Height"	Width"	Depth"	Price
CDU-3252	Elementary Height	32	33	33	
CDU-3952	Adult Height	39	33	33	

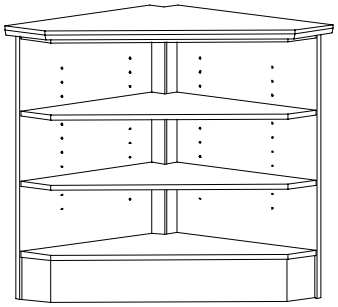

90 Degree Open Shelf Corner Unit

Each unit will be triangular with an angled open-front design and will be used to form a 90-degree transition in any desk arrangement. Each unit will have one (1) fixed base shelf and adjustable shelves according to unit height. Adult height units will be supplied with two (2) adjustable shelves and elementary-height units will be supplied with one (1) adjustable shelf. Shelves will be accessible from patron side of circulation desk. Open shelf corner units do not provide for wire access.

Catalog #	Description	Height	Width	Depth	Price
CDU-3217	Elementary Height	32	33	33	
CDU-3917	Adult Height	39	33	33	

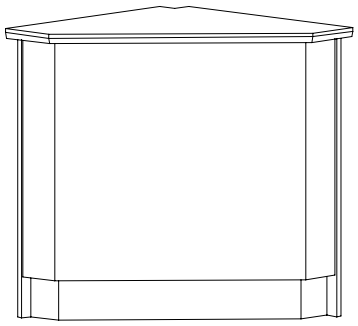

90 Degree Closed Corner Unit

Each unit will be triangular with aangled, closed-face design and will be used to form a 90-degree transition in any desk arrangement. This unit is supplied with an internal wire manager unless otherwise specified.

Catalog #	Description	Height	Width	Depth	Price
CDU-3216	Elementary height	32	33	33	
CDU-3916	Adult height	39	33	33	

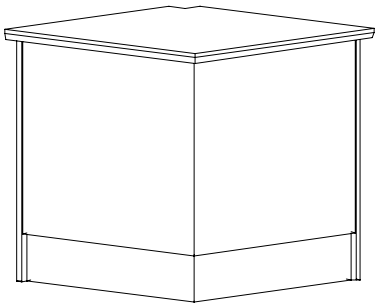

Square Closed Corner Unit

Each unit will be square, with a closed-face design and will be used to form a 90-degree transition in any desk arrangement. This unit is supplied with an internal wire manager unless otherwise specified.

Catalog #	Description	Height"	Width"	Depth"	Price
CDU-3224	Elementary Height	32	33	33	
CDU-3924	Adult Height	39	33	33	

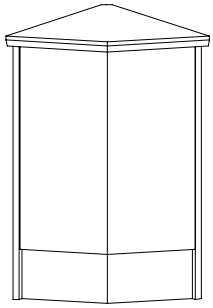

45 Degree Closed Corner Unit

Each unit will be triangular, with angled, closed-face design and will be used to form a 45-degree transition in any desk arrangement. This unit is supplied with an internal wire manager unless otherwise specified.

Catalog #	Description	Height"	Width"	Depth"	Price
CDU-3225	Elementary Height	32	24-3/4	30	
CDU-3925	Adult Height	39	24-3/4	30	

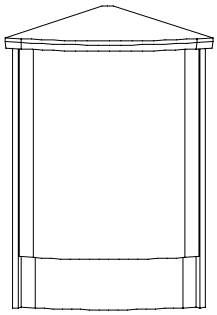

45 Degree Radiused Closed Corner Unit

Each unit will be triangular, with a radiused, closed-face design and will be used to form a 45-degree transition in any desk arrangement. This unit is supplied with an internal wire manager unless otherwise specified.

Catalog #	Description	Height"	Width"	Depth"	Price
CDU-3227	Elementary Height	32	24-3/4	30	
CDU-3927	Adult Height	39	24-3/4	30	

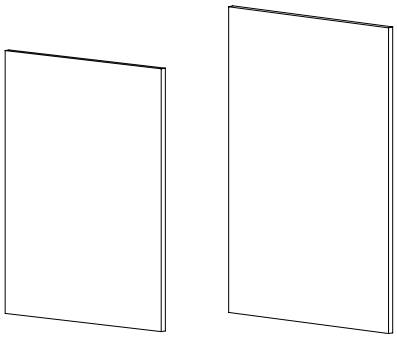

Finished End Panel

Each panel will be constructed using banded, matching veneer-core plywood.

All fully assembled circulation desks will need two (2) finished end panels unless placement is permanently next to a wall or other structure that hides the unfinished side of the service unit on the end.

ADA Desk Note: When the adult version is used on one end of the circulation desk, an elementary finished end panel should be ordered for that end.

Catalog #	Description	Height"	Width"	Depth"	Price
CDU-3218	Elementary height, standard depth	31-3/4	1	30-1/2	
CDU-3918	Adult height, standard depth	38-3/4	1	30-1/2	

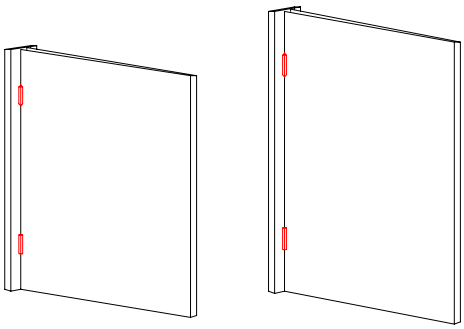

Swinging Gate

Gates can be mounted to walls or finished end panels on the circulation desk. Gates will be constructed using banded, matching veneer-core plywood in widths of up to 36". Single-action gates are supplied with stop moulding. **The desired width of the gate and hinge type (single or double action) MUST BE quoted in advance and specified on the order.**

.

Catalog #	Description	Height"	Width"	Depth"	Price
CDU-1G 32	Elementary height, single action hinge	32	Specify	n/a	based on width
CDU-2G 32	Elementary height, double action hinge	32	Specify	n/a	based on width
CDU-1G 39	Adult height, single action hinge	39	Specify	n/a	based on width
CDU-2G 39	Adult height, double action hinge	39	Specify	n/a	based on width

"Education is not the filling of a pail, but the lighting of a fire."
William Butler Yeats

Planning For & Ordering Edgeband for Ultima Series

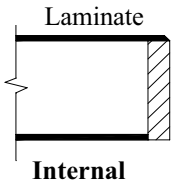

Internal

All edges *except* the Patron side of the work surface comes with a 1/4" internal solid red oak edgeband.

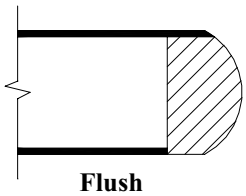

Flush

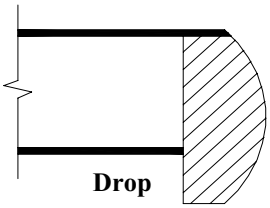

Drop

When choosing an edgeband for Patron side you can either have the edgeband placed flush with the bottom of the top or dropped below the bottom.

Work surfaces will be constructed with a 3/4"T solid red oak edgeband and can be ordered with any one of a variety of internal or external edgeband details.

See below for edge details for the Ultima Series.

Edge Details for Ultima Series

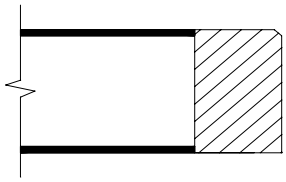

1 1/4" thick top (External)
Montana Flush

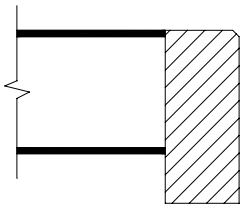

1 1/4" thick top (External)
Montana Drop

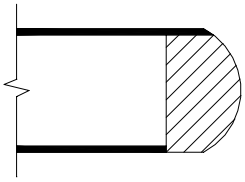

1 1/4" thick top (Internal)
Shallow Bullnose Flush

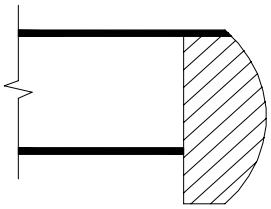

1 1/4" thick top (Internal)
Shallow Bullnose Drop

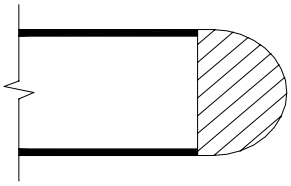

1 1/4" thick top (External)
Bullnose Flush

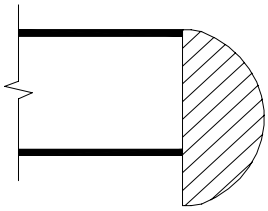

1 1/4" thick top (External)
Bullnose Drop

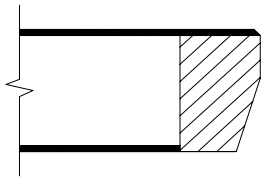

1 1/4" thick top (Internal)
Premier Flush

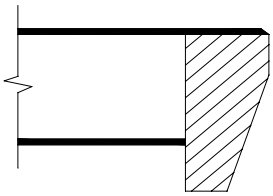

1 1/4" thick top (Internal)
Premier Drop

GENERAL SPECIFICATIONS

The *ModuFlex* Series circulation desk is designed to provide the maximum degree of flexibility of modern cabinetry. Each service unit uses the modular concept to achieve nearly any desired desk arrangement without the need for a custom top.

CONSTRUCTION AND MATERIALS

Each desk unit will be constructed from 1" thick, 7-ply veneer core plywood, with plain-sliced face veneers. Front panels will be 3/4"T rift-cut veneer matched for color to provide uniformity across the entire desk arrangement.

Each unit is constructed with a 6" high x 3/4"D toe space covered with flat black laminate on both sides. All visible panel edges will be banded with 1/2" thick eased matching hardwood. All doors, adjustable shelves, and drawer fronts will be constructed from 3/4" thick, 7-ply veneer core plywood with plain-sliced veneers.

All edges will be banded with 1/4" thick eased matching hardwood. SEE PAGE 92 FOR EDGE BAND DETAILS. Shelves will be on no greater than 2" centers supported by 1/4" shelf pins.

Each drawer box will be of English dovetail design and will be constructed using 1/2" thick solid northern grown red oak with a 1/4" thick veneer core plywood bottom. Box drawers will be 14-7/8"W x 18"D x 5-1/4"H. File drawers will be 14-7/8"W x 18"D x 10-1/2"H. Double width drawers will be 31-1/2"W x 18"D x 5-1/4"H.

Individual tops will be 1-1/4" thick and will be constructed from 1-1/8" thick particleboard with .050" high-pressure laminate on the face with .020" backer sheet on the underside of the top.

Patron edge will be banded with 3/4" solid wood edgeband per customer selection from our edgeband chart on the last page of this section. All Staff-side edges will be internally banded with 1/4" thick solid red oak.

HARDWARE

All drawers will be constructed to an overall depth of 18" and will be mounted on 18" full-extension, ball bearing glides with a load rating of 100 pounds per pair. All locks on a given desk arrangement will be keyed identically.

All doors will be hung with 110-degree opening, self-closing Salice hinges (180-degree available if specified) and Salice Smove (tm) door cushion. Pulls for both doors and drawers will be satin chrome 5/16" diameter wire pulls. Pull substitutions may be made at customer's request.
[an upcharge may apply].

All units will be supplied with 3" grommets through the work surface and end panels with J-channel wire manager mounted under the surface.

FINISH: See page 5 for finish specifications

Visit our website at ***www.russwood.net***

CDM-1

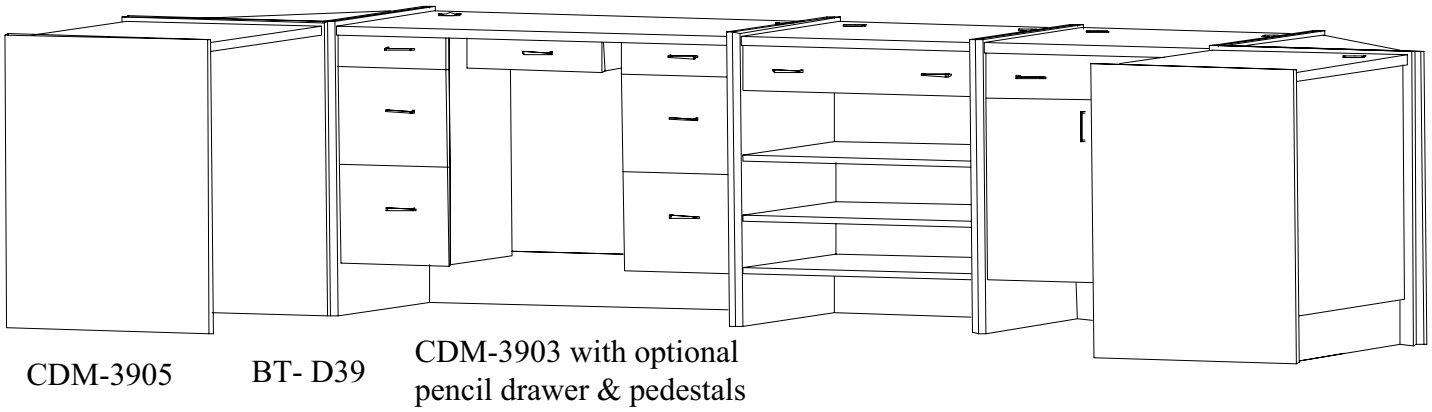
CDM-3905
BT- D39
CDM-3903 with optional
pencil drawer & pedestals

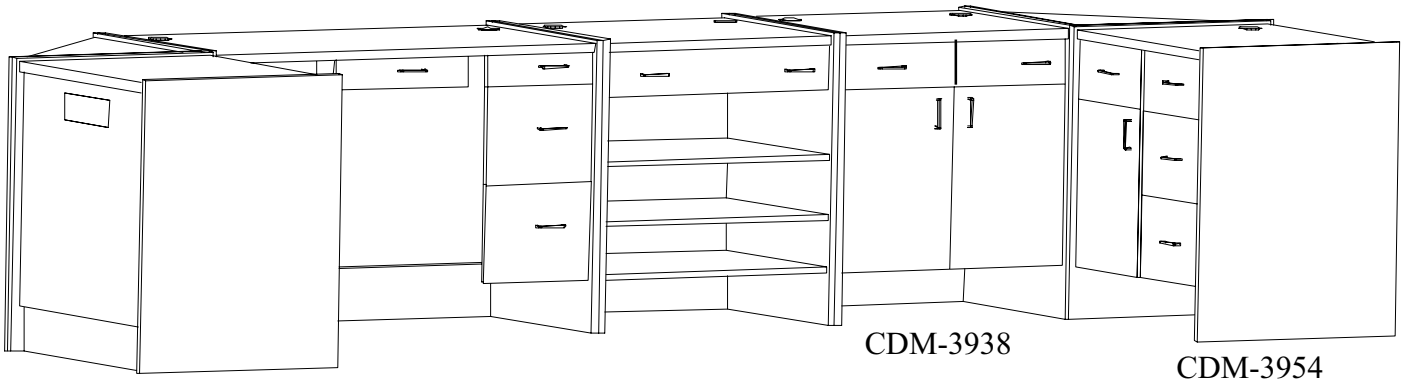
CDM-3938
CDM-3954

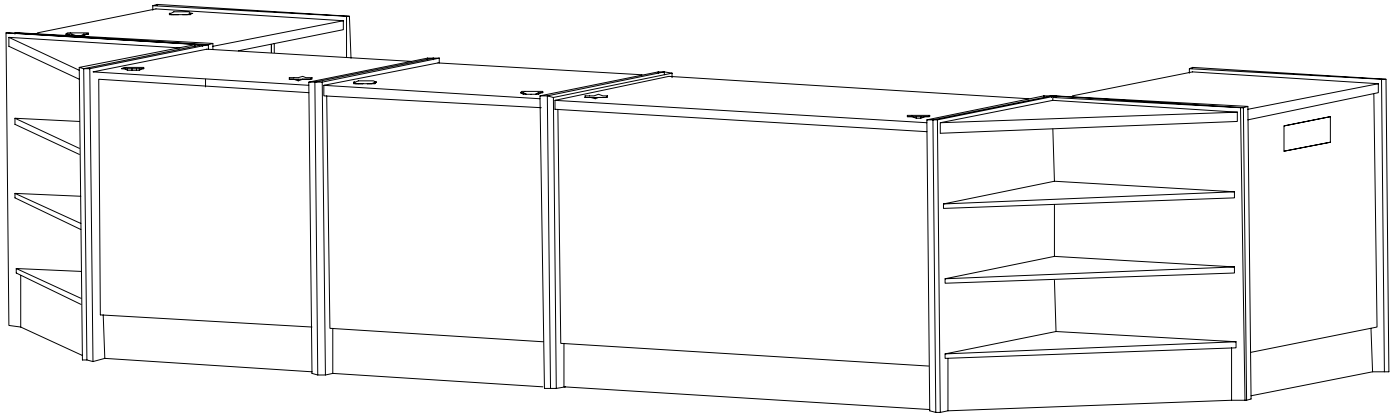
CDM-3923

CDM-2

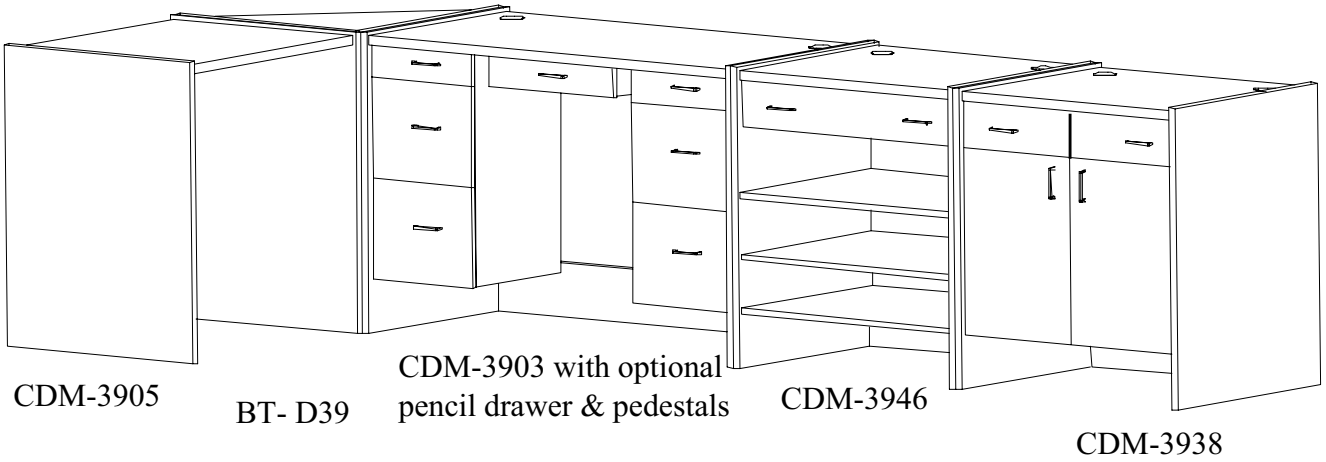

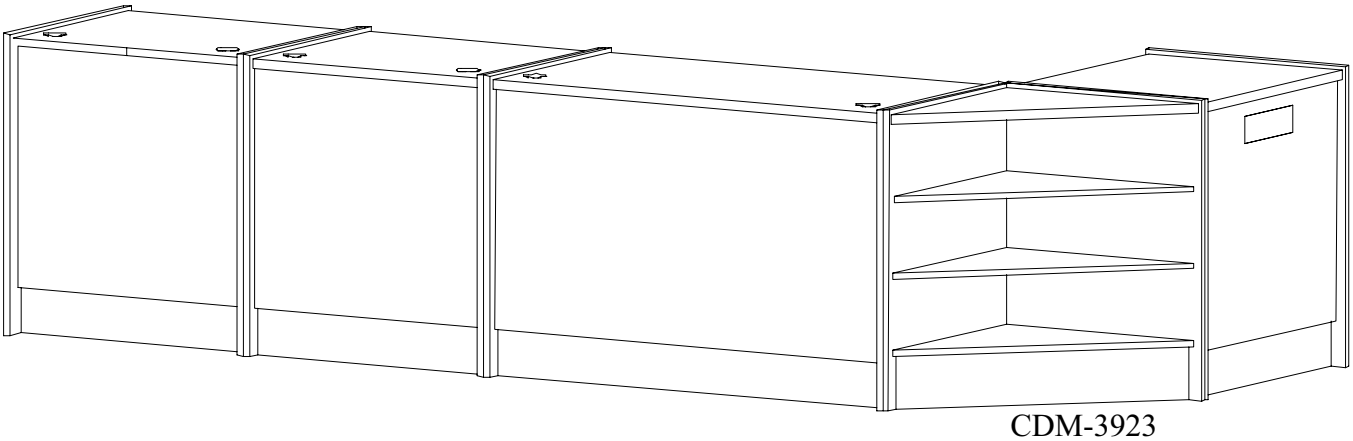

The *ModuFlex Series* circulation desks feature service units with permanently attached work surfaces and finished end panels for maximum re-arrangement.

The service units shown are featured as our most popular units in this series. Nearly every circulation desk we've produced include the service units shown. These popular units are a book return with depressible truck, a corner unit, a double patron unit with an optional pencil drawer and pedestal, an open shelf unit, and a cupboard unit. When arranged the desks form either in a "U" shape or a "L" shape depending on the total number of service units ordered. If you desire a service unit that is not shown here then you can choose from the many others that follow.

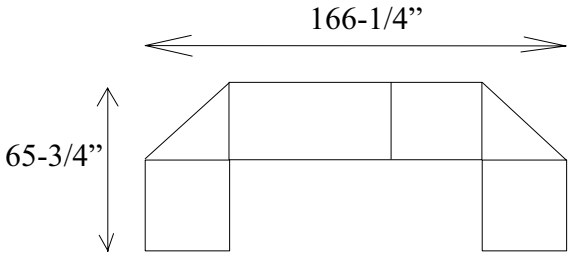

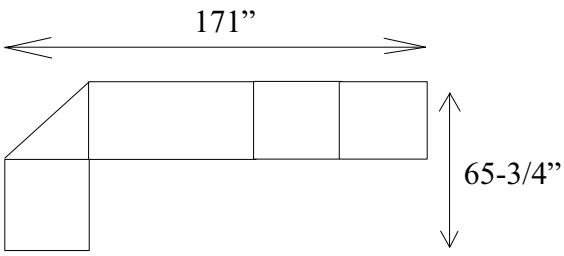

ModuFlex Series Trim Packages

These trim packages for the Ultima Series give you a wide range of design and cost options.

Ordering a trim package is simple.

1. Select the ModuFlex service units you desire in your circulation desk arrangement.
2. Determine the total number of single width or small corner units, multiply by selected package upcharge.
3. Determine the total number of double or larger corner units, multiply by selected package upcharge.
4. Add the total single and double widths to determine the total trim package upcharge.

Slimline TM

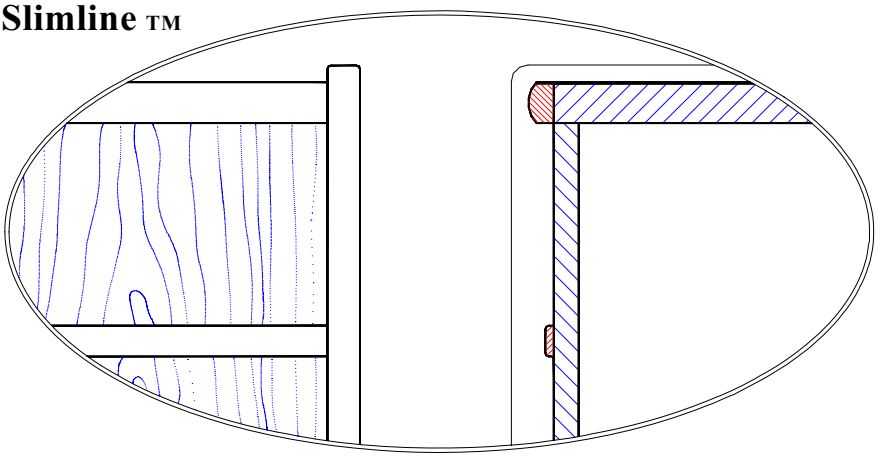

The Slimline package adds a solid red oak trim molding which is placed on the modesty (patron) panel and captured by the end panel. The molding is located 6” inches from the top. The molding is 15/16"W x 1/4" thick with 1/8" radius on the edges. Trim will be finished to match.

Crisscross TM

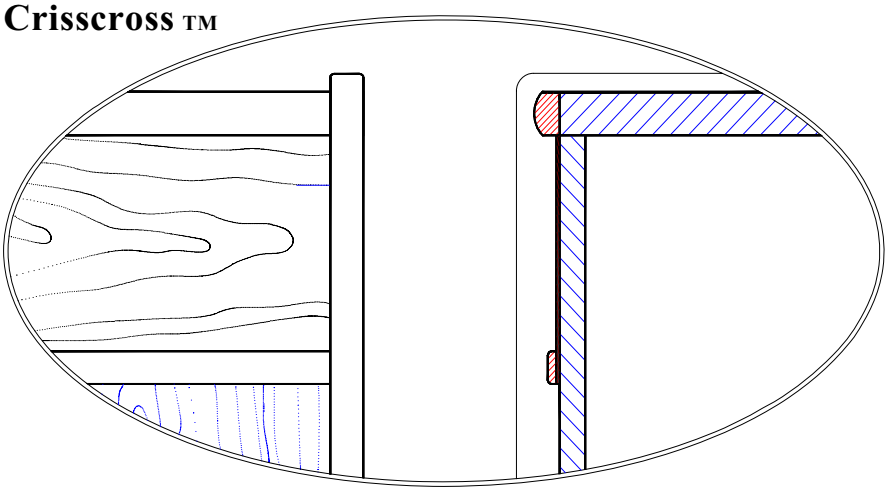

The Crisscross package adds an accent of 6”W red oak veneer placed horizontally to the modesty panel and captured by the end panels. The trim molding is the Slimline profile 15/16"W x 1/4" thick with 1/8" radius on the edges. Veneer and trim will be finished to match.

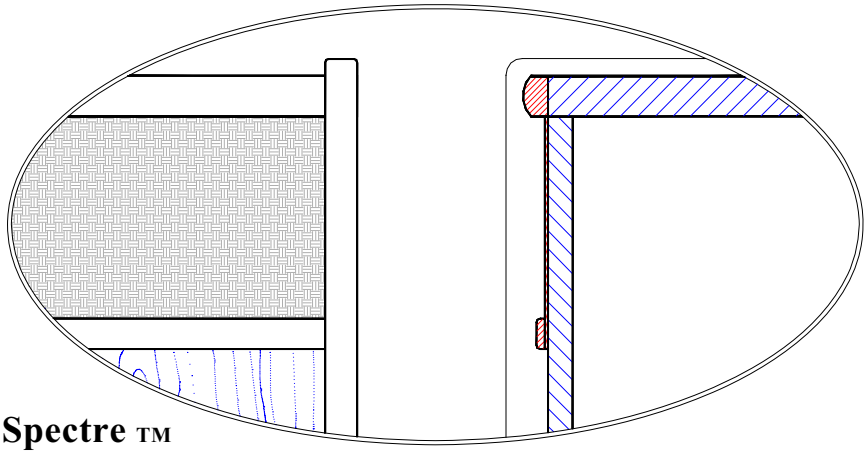

Spectre TM

The Spectre package adds an accent of 6”W HPL laminate of your choice to the modesty panel and captured by the end panels. The trim molding is 15/16"W x 1/4" thick with 1/8" radius on the edges. Trim will be finished to match.

NOTE: Laminate pattern selection may be different than work surface choice. Laminate selection should also specify if laminate pattern is perpendicular or parallel to veneer grain.

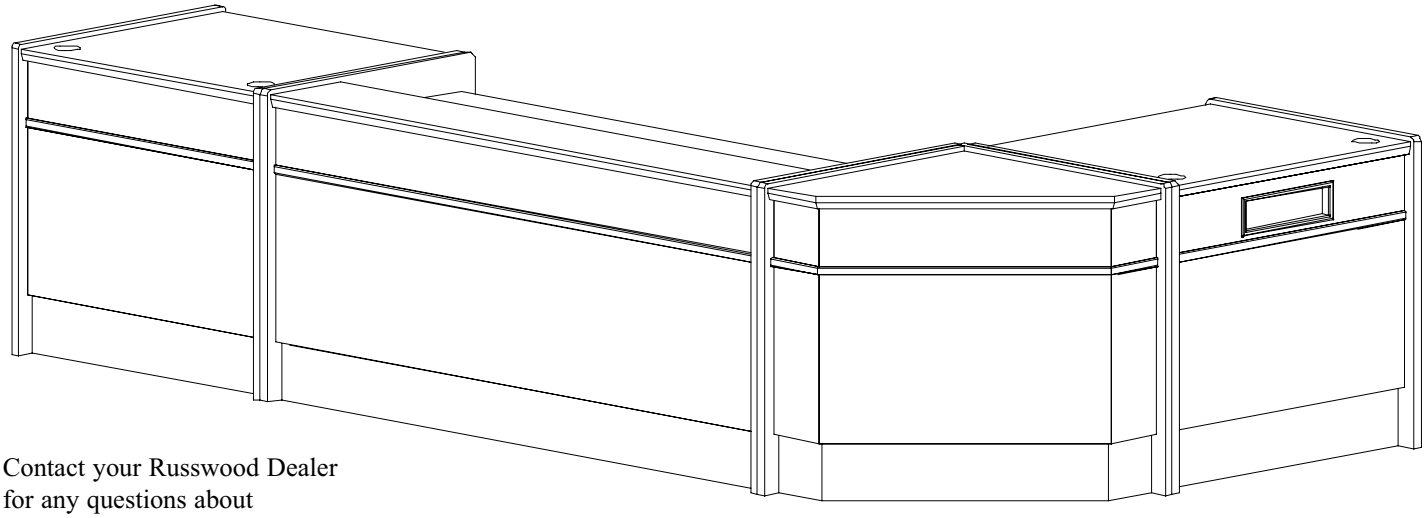

Contact your Russwood Dealer for any questions about Circ. Desk Trim Packages.

Catalog #	Description	Single W" unit upcharge $	Double"W unit upcharge $
SLM-1	Slimline Trim Package for ModuFlex Series		
CCM-1	Crisscross Trim Package for ModuFlex Series		
SPM-1	Spectre Trim Package for ModuFlex Series		
	To figure upcharge:	# 36"W units (x) upcharge per unit =	
		# 72"W units (x) upcharge per unit = + _____	
		Total upcharge $	

“Too often we give children answers to remember rather than problems to solve.” Roger Lewin

Cambre TM

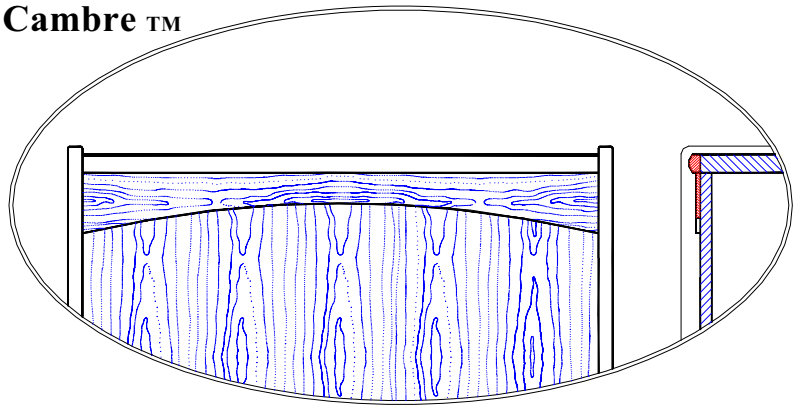

The Cambre package adds a 4"W x 1/4"T solid red oak trim with an arch on the bottom edges. The trim is added at the top of the modesty panel and is captured by the end panels. Arched trim will finished to match.

NOTE: This package is not available on radiused desk or corner units.

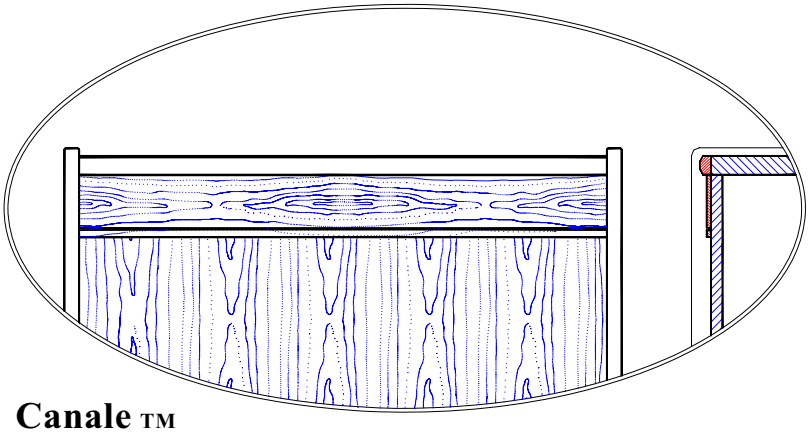

The Canale package adds a 4"W x 1/4"T solid red oak trim with a 1/8" x 1/8" reveal located 3/4" from the bottom of the trim. Reveal will be finished flat black. The trim is added at the top of the modesty panel and is captured by the end panels. Trim will be finished to match.

NOTE: This package is not available on radiused desk or corner units.

Canale TM

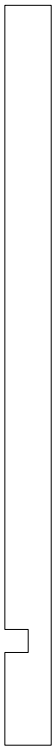

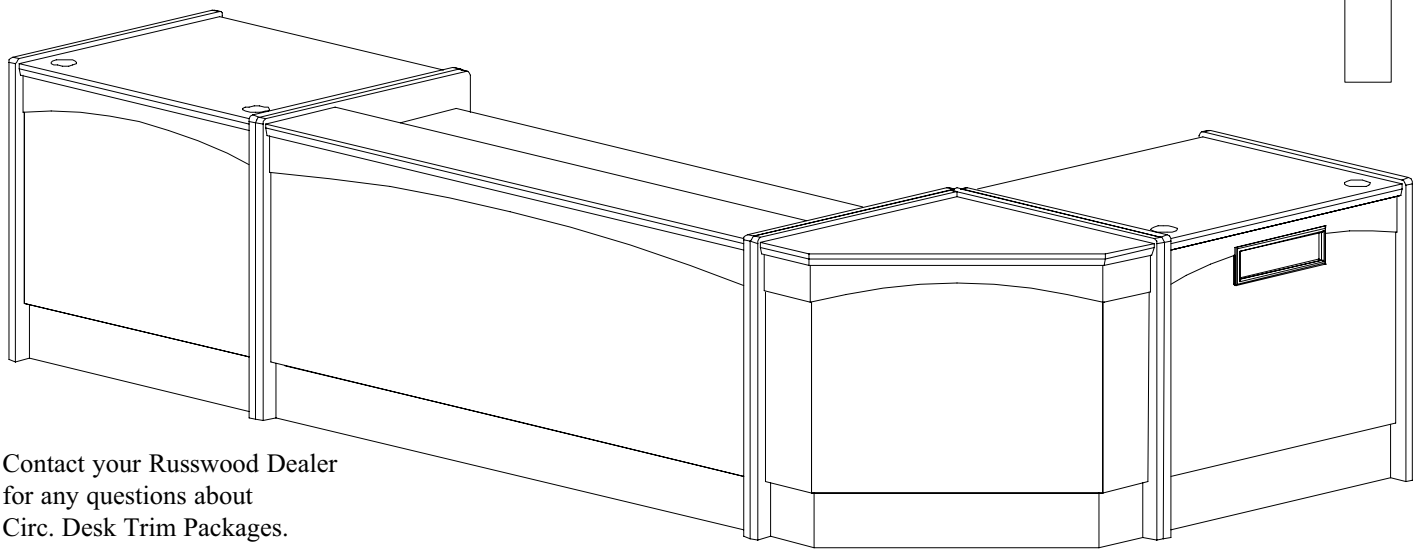

Contact your Russwood Dealer for any questions about Circ. Desk Trim Packages.

Catalog #	Description	Single W" per unit upcharge	Double W unit upcharge $
CBM -1	Cambre Trim Package for ModuFlex Series		
CLM-1	Canale Trim Package for ModuFlex Series		
	To figure upcharge:	# 36"W units (x) upcharge per unit =	
		# 72"W units (x) upcharge per unit = + _____	
		Total upcharge $	

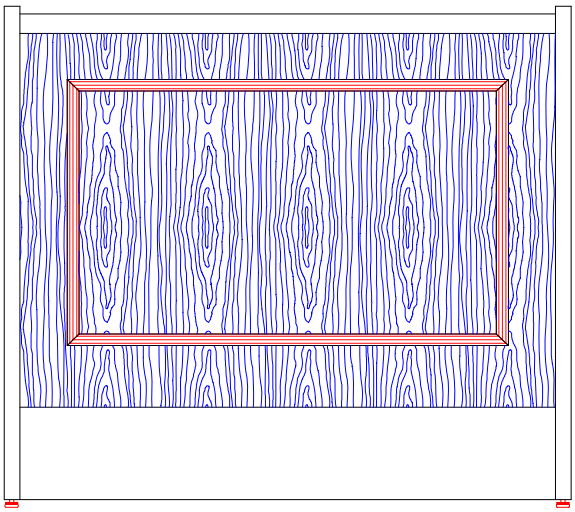

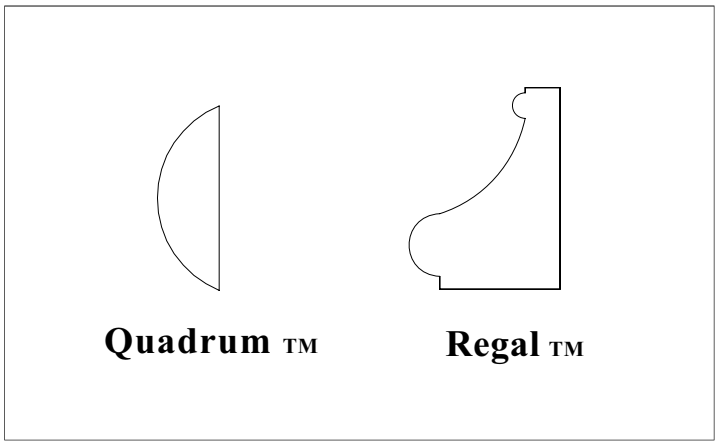

The Quadrum and Regal packages can be applied to any flat modesty panel or end panel. The treatment forms a rectangle that is about 3" from all edges. The trim package comes with the choice of two moldings. The Quantum and Regal edge details of these two moldings can be seen above. Note: this treatment is not available on radius units. On 36" circulation desks the modesty panels receives one such rectangle while a 72" unit would receive two such rectangles

NOTE: The Quadrum and Regal packages are not available on radiused desk or corner units.

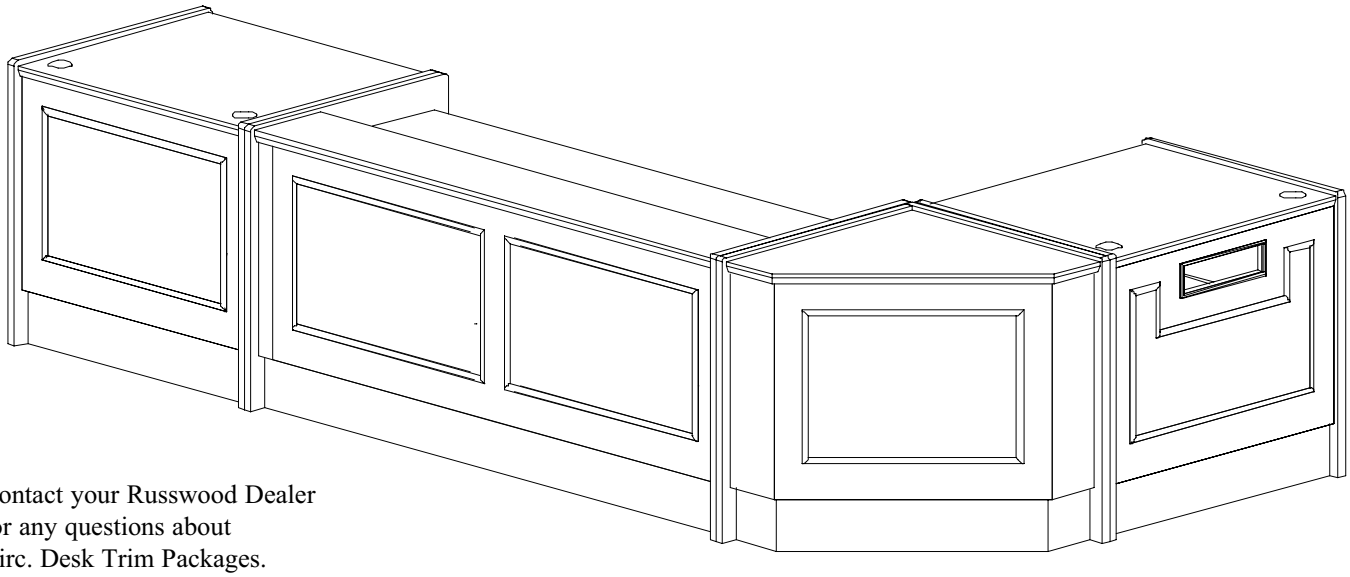

Contact your Russwood Dealer
for any questions about
Circ. Desk Trim Packages.

Catalog #	Description	Single W" unit upcharge	Double W" unit upcharge
QDM-1	Quadrum Trim Package for ModuFlex Series		
RGM -1	Regal Trim Package for ModuFlex Series		
	To figure upcharge:	# 36"W units (x) upcharge per unit =	
		# 72"W units (x) upcharge per unit = + _____	
		Total upcharge $	

For the ultimate in versatility...

Combine any of our desk units in this series with any of the following mobile units. Combining mobile units and desk units allows you to change the function of any of your circulation desk work stations at a moment's notice. Units with permanent features can be used with desks that use mobile units.

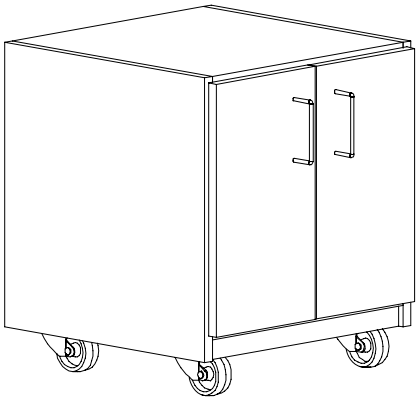

Mobile Cupboard Unit

This unit is supplied with two (2) shelves for the adult height and one (1) shelf for the elementary height. The back is supplied with grommets for wire management.

Catalog #	Description	Height"	Width"	Depth"	Price
A-27	Elementary height	26	25	20	
A-28	Adult height	36	25	20	

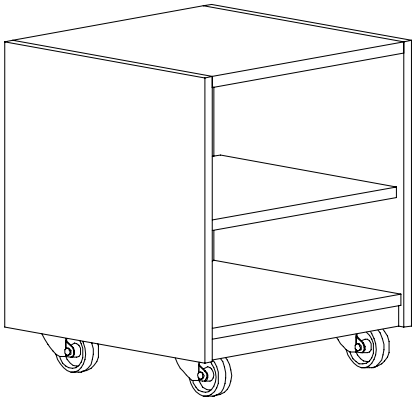

Mobile Open Shelf Unit

This unit is supplied with two (2) shelves for the adult height and one (1) shelf for the elementary height. The back is supplied with grommets for wire management.

Catalog #	Description	Height"	Width"	Depth"	Price
A-29	Elementary height	26	25	20	
A-30	Adult height	30	25	20	

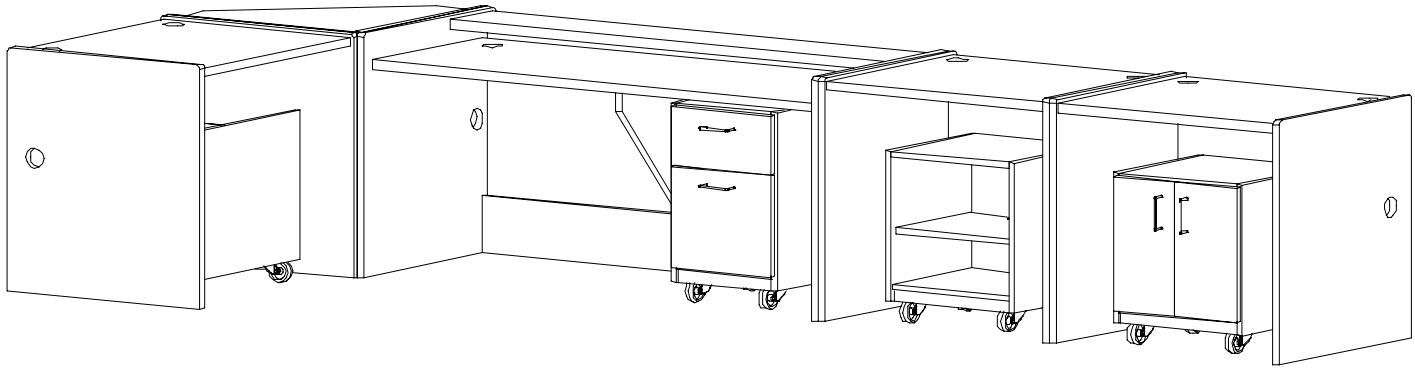

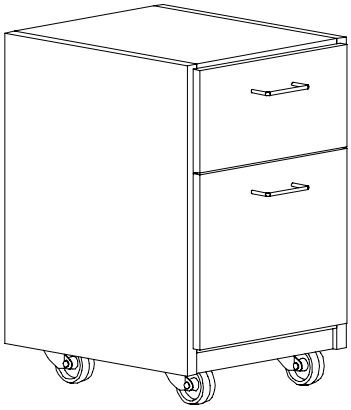

Mobile File Cabinet

The elementary height unit is supplied with (1) box and (1) file drawer. The intermediate height unit is supplied with (2) boxes and (1) file. The adult height unit is supplied with (1) box drawer and (2) file drawers. The box drawer is14-7/8”W x 18”D x 5-1/4”H. The file drawer is 14-7/8”W x 18”D x 10-1/2”H. The unit is counterbalanced so that it does not tip over under normal use when the file drawer is opened.

Catalog #	Description	Height"	Width"	Depth"	Price
A-23	Elementary height	25	17	19	
A-23A	Intermediate height	31	17	19	
A-23B	Adult height	36	17	19	

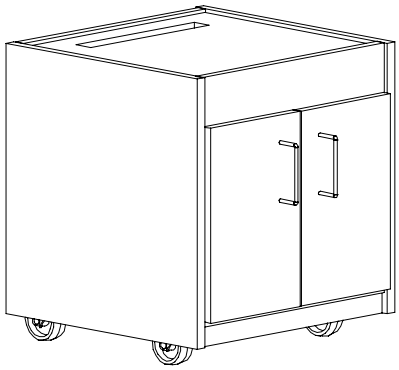

Mobile Printer Stand

Unit end panels are constructed of 1”T red oak veneer plywood. All other components are constructed with 3/4”T red oak veneer plywood. Unit is supplied with one (1) adjustable shelf and one (1) base shelf. The shelf is 22-134”W x 17”D x 3/4”T. Adj. Shelf is notched for wiring management. All exposed edges are edgebanded with 1/4”T solid red oak. Doors have satin chrome pulls. The bottom is supplied with a grommet for wire management. Wheels are 210 lbs rated ball-bearing swivel casters. The top is removable and is slotted for printer paper.

Catalog #	Description	Height"	Width"	Depth"	Price
A-24	Universal height	21	21	19	

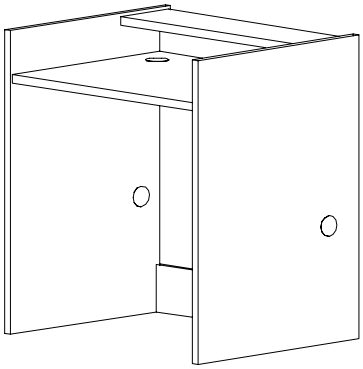

Patron Desk Unit

Inside dimensions are 34”W x 27-1/2”D. Units will have a work surface height of 29”. All units will have a recessed work surface measuring 34"W x 27-1/2"D at a height of 29". Patron ledge is 6" deep. A grommet will be located in the center at the rear of the work surface unless otherwise specified.

Catalog #	Description	Height"	Width"	Depth"	Price
CDM-3202	Elementary Height	32	36	30	
CDM-3902	Intermediate Height	39	36	30	
CDM-4202	Adult Height	42	36	30	

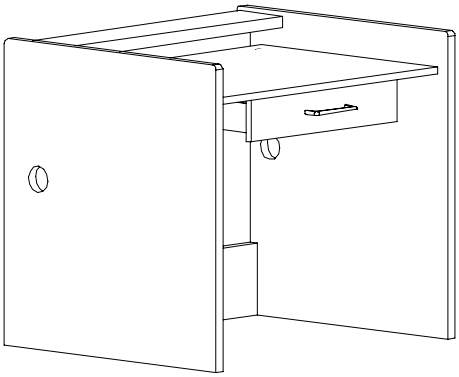

Patron Desk With Pencil Drawer Unit

Inside dimensions are 34"W x 27-1/2"D. All units will have a recessed work surface measuring 34"W x 27-1/2"D at a height of 29". Patron ledge is 6" deep. A grommet will be located in the center at the rear of the work surface unless otherwise specified. A pencil drawer will be centered under the work surface and will measure 18"W x 14-7/8"D x 3"H.

Catalog #	Description	Height"	Width"	Depth"	Price
CDM-3235	Elementary Height	32	36	30	
CDM-3935	Intermediate Height	39	36	30	
CDM-4235	Adult Height	42	36	30	

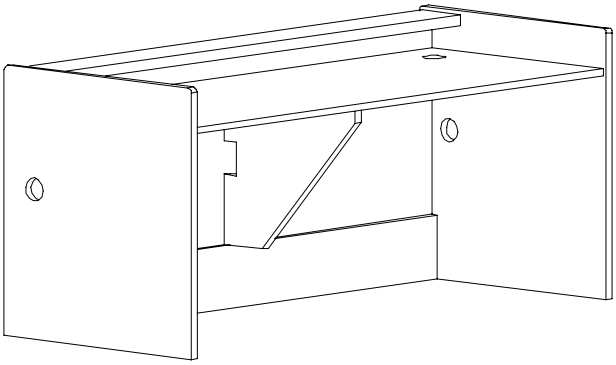

Double-Width Patron Desk Unit

Inside dimensions are 70”W x 27-1/2”D. All units will have a work surface height of 29”. Patron ledge is 6” deep. Work surface is 70”W x 27-1/2”D. Two (2) grommets will be located at the rear of the work surface on each side unless otherwise specified. The work surface will be supported at midspan with a 1” thick stiffknee that rests on top of the toe board.

Catalog #	Description	Height"	Width"	Depth"	Price
CDM-3203	Elementary Height	32	72	30	
CDM-3903	Intermediate Height	39	72	30	
CDM-4203	Adult Height	42	72	30	

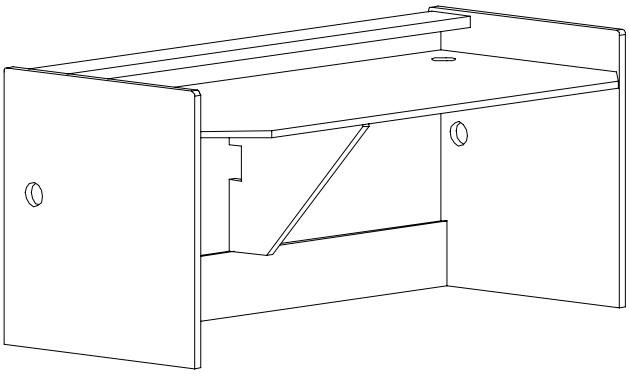

Double-Width Extended Work Surface Patron Desk Unit

Inside dimensions are 70”W x 27-1/2”D. All units will have a work surface height of 29”. Patron ledge is 6” deep. Two (2) grommets will be located at the rear of the work surface on each side unless otherwise specified. The work surface will be supported at midspan with a 1” thick stiffknee that rests on top of the toe board. Work surface is 70”W x 30”D.

Catalog #	Description	Height"	Width"	Depth"	Price
CDM-3203-EW	Elementary Height	32	72	32	
CDM-3903-EW	Intermediate Height	39	72	32	
CDM-4203-EW	Adult Height	42	72	32	

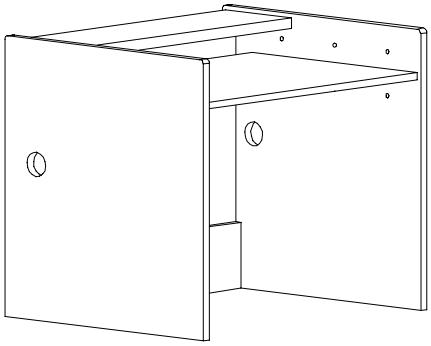

Patron Desk with adjustable work surface

This unit provides a 6”D patron ledge. The work surface is adjustable to accommodate a variety of possible needs. On the adult height unit, the work surface possibilities are 29”H, 32”H, and 39”H. On the intermediate height unit, the work surface possibilities are 27”H, 29”H, and 32”H. On the elementary height unit, the work surface possibilities are 27”H, and 29”H. A grommet will be located in the center at the rear of the work surface unless otherwise specified. Work surface is 34”W x 27-1/2”D.

Catalog #	Description	Height"	Width"	Depth"	Price
CDM-3248	Elementary Height	32	36	30	
CDM-3948	Intermediate Height	39	36	30	
CDM-4248	Adult Height	42	36	30	

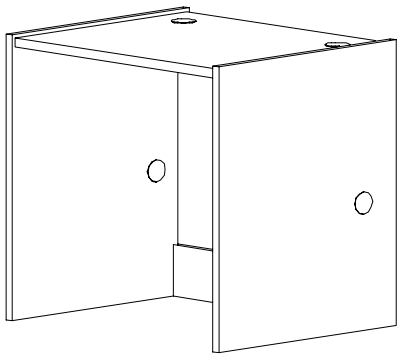

Desk Unit

Each unit will have inside dimensions of 34”W x 27-1/2”D. Two (2) grommets will be located at the rear of the work surface on each side unless otherwise specified.

Catalog #	Description	Height"	Width"	Depth"	Price
CDM-3234	Elementary Height	32	36	30	
CDM-3934	Intermediate Height	39	36	30	
CDM-4234	Adult Height	42	36	30	

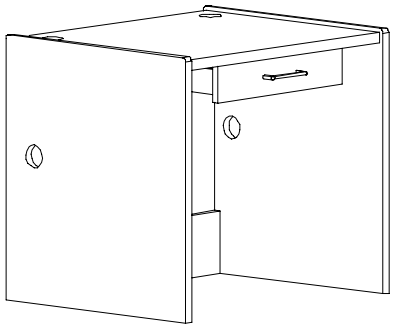

Desk Unit With Pencil Drawer

Each Unit will have an inside dimension of 34"W x 27-1/2"D. A grommet will be located near each edge of the unit unless otherwise specified. A pencil drawer will be located underneath the middle of the work surface and will measure 18"W x 14-7/8"D x 3"H.

Catalog #	Description	Height"	Width"	Depth"	Price
CDM-3247	Elementary Height	32	36	30	
CDM-3947	Intermediate Height	39	36	30	
CDM-4247	Adult Height	42	36	30	

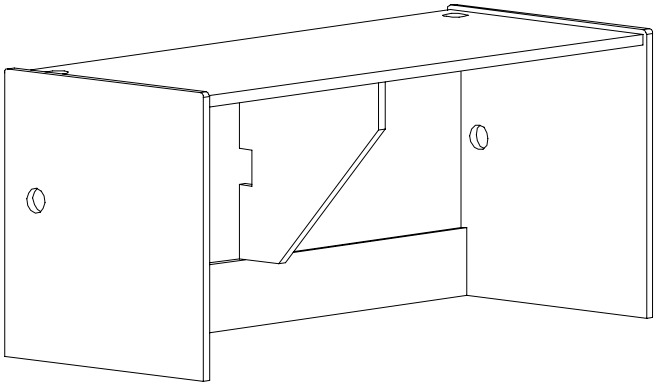

Double Width Desk Unit

Each Unit will have an inside dimension of 70"W x 27-1/2"D. This unit will be supplied with two (2) grommets located at each end of the work surface unless otherwise specified. The work surface will be supported at midspan with a 1” thick stiffknee that rests on top of the toe board.

Catalog #	Description	Height"	Width"	Depth"	Price
CDM-3253	Elementary Height	32	72	30	
CDM-3953	Intermediate Height	39	72	30	
CDM-4253	Adult Height	42	72	30	

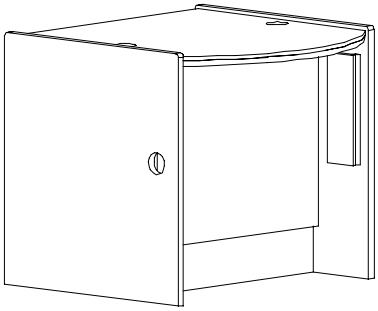

ADA Transaction Unit

The unit will have modesty panel mounted along the midline. The modesty panel is recessed from the patron side to provide room for wheelchair access. This unit will be supplied with two (2) grommets located at each end of the work surface unless otherwise specified. A wire chase is supplied to ensure wire concealment.

Catalog #	Description	Height"	Width"	Depth"	Price
CDM-3220	ADA 32"H - use of all heights	32	36	36	

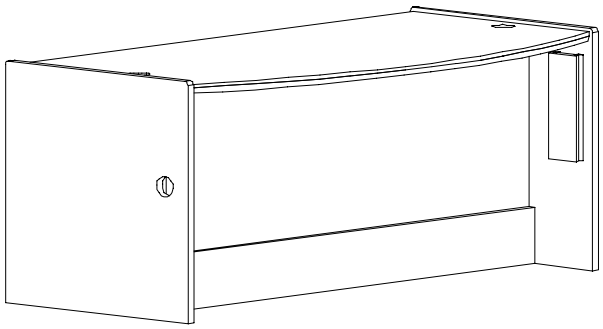

Double-Width ADA Transaction Unit

The unit will have modesty panel mounted along the midline. The modesty panel is recessed from the patron side to provide room for wheelchair access. This unit will be supplied with two (2) grommets located at each end of the work surface unless otherwise specified. A wire chase is supplied to ensure wire concealment.

Catalog #	Description	Height"	Width"	Depth"	Price
CDM-3221	ADA max height 32"H	32	72	36	

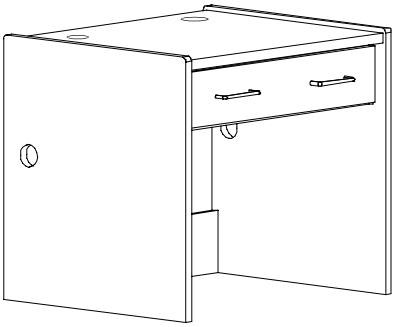

Single Drawer Knee Space Unit

The inside dimensions of the unit are 34"W x 27-1/2"D. The unit is supplied with a 31-1/2”W x 18”D x 5-1/4”H drawer. This unit will be supplied with two (2) grommets located at each end of the work surface unless otherwise specified.

Catalog #	Description	Height"	Width"	Depth"	Price
CDM-3236	Elementary Height	32	36	30	
CDM-3936	Intermediate Height	39	36	30	
CDM-4236	Adult Height	42	36	30	

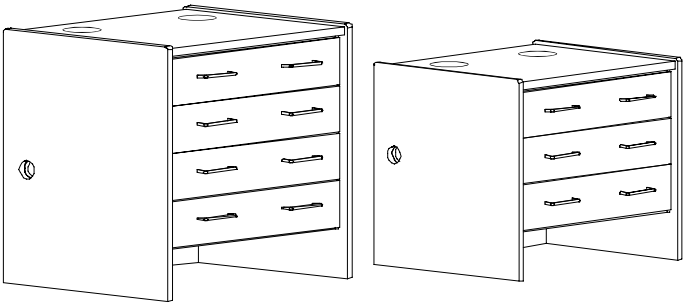

Shown Adult & Elementary

Single Drawer Stack Unit

This unit will consist of a stack of full width drawers 31-1/2”W x 18”D x 5-1/4”H. The adult and intermediate height units will receive four (4) drawers and the elementary unit will receive three (3) drawers. This unit will be supplied with two (2) grommets located at each end of the work surface unless otherwise specified.

Catalog #	Description	Height"	Width"	Depth"	Price
CDM-3222	Elementary Height	32	36	30	
CDM-3922	Intermediate Height	39	36	30	
CDM-4222	Adult Height	42	36	30	

Single Drawer Open Shelf Unit

Unit is supplied with a full-width, 31-1/2W x 18"D x 5-1/4"H drawer over open shelving. Adult and intermediate units are supplied with two full-depth, adjustable shelves. The elementary height unit is supplied with one full-depth, adjustable shelf. This unit will be supplied with two (2) grommets located at each end of the work surface unless otherwise specified. The shelf is 32-1/4”W x 23”D x 3/4”T

Catalog #	Description	Height"	Width"	Depth"	Price
CDM-3246	Elementary Height	32	36	30	
CDM-3946	Intermediate Height	39	36	30	
CDM-4246	Adult Height	42	36	30	

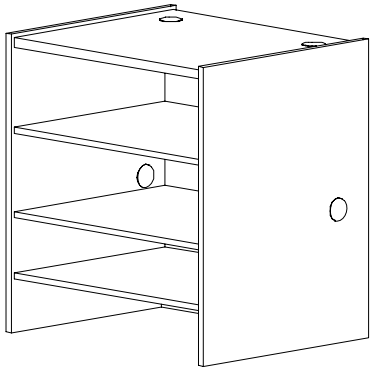

Open Shelf Unit

Adult and Intermediate height units will be supplied with two full-depth, adjustable shelves. Elementary height units will be supplied with one shelf. This unit will be supplied with two (2) grommets located at each end of the work surface unless otherwise specified. The shelf is 32-1/4”W x 23”D x 3/4”T

Catalog #	Description	Height"	Width"	Depth"	Price
CDM-3208	Elementary Height	32	36	30	
CDM-3908	Intermediate Height	39	36	30	
CDM-4208	Adult Height	42	36	30	

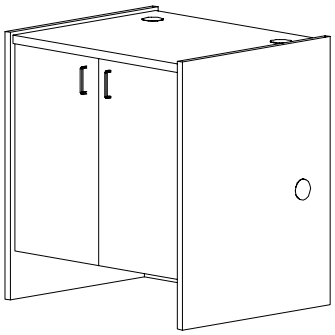

Cupboard Unit

Adult and Intermediate height units are supplied with two full-depth, adjustable shelves. Elementary height units will be supplied with one shelf. Hinged doors will have a lock and door pulls. This unit will be supplied with two (2) grommets located at each end of the work surface unless otherwise specified. The shelf is 32-1/4”W x 23”D x 3/4”T

Catalog #	Description	Height"	Width"	Depth"	Price
CDM-3210	Elementary Height	32	36	30	
CDM-3910	Intermediate Height	39	36	30	
CDM-4210	Adult Height	42	36	30	

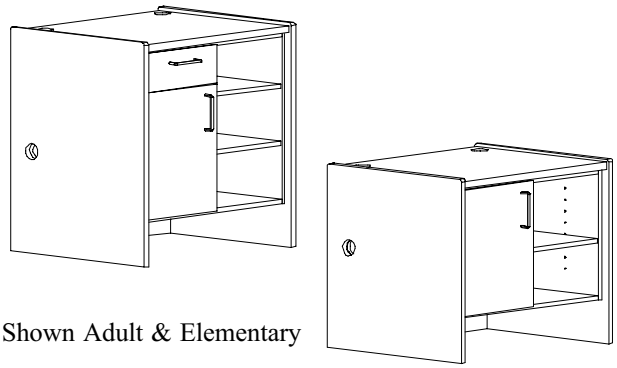

Shown Adult & Elementary

Left Cupboard Open Shelf Unit

On the left side, the adult and intermediate units will be supplied with a locking box drawer and a cupboard space with two (2) adjustable shelves. The elementary unit will be supplied with a cupboard unit with (1) adj. shelf. The right side of the unit will be open adj. shelving. The adult and intermediate height units will be supplied with (2) adj. shelves, and the elementary height unit will be supplied with (1) adj. shelf. This unit will be supplied with (2) grommets located at each end of the work surface unless otherwise specified. The shelf is 15-5/8”W x 23”D x 3/4”T. The box drawer is 14-7/8”W x 18”D x 5-1/4”H.

Catalog #	Description	Height"	Width"	Depth"	Price
CDM-3242	Elementary Height	32	36	30	
CDM-3942	Intermediate Height	39	36	30	
CDM-4242	Adult Height	42	36	30	

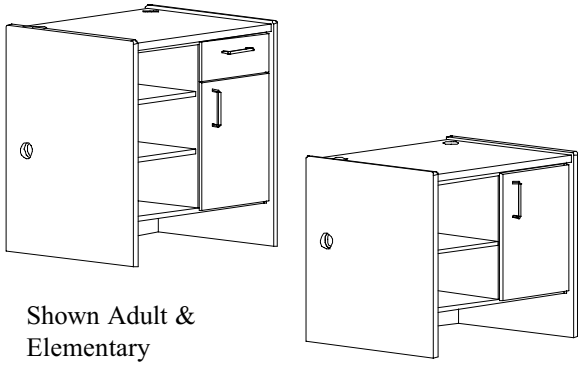

Shown Adult & Elementary

Right Cupboard Open Shelf Unit

On the right side, the adult and intermediate units will be supplied with a locking box drawer and a cupboard space with two (2) adjustable shelves. The elementary unit will be supplied with a cupboard unit with (1) adj. shelf. The left side of the unit will be open adj. shelving. The adult and intermediate height units will be supplied with (2) adj. shelves, and the elementary height unit will be supplied with (1) adj. shelf. This unit will be supplied with (2) grommets located at each end of the work surface unless otherwise specified. The shelf is 15-5/8”W x 23”D x 3/4”T. The box drawer is 14-7/8”W x 18”D x 5-1/4”H.

Catalog #	Description	Height"	Width"	Depth"	Price
CDM-3243	Elementary Height	32	36	30	
CDM-3943	Intermediate Height	39	36	30	
CDM-4243	Adult Height	42	36	30	

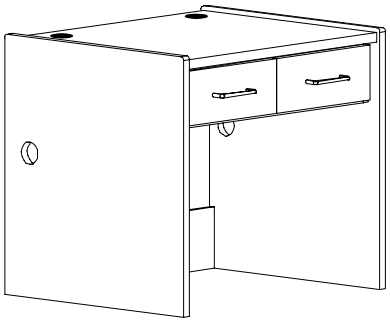

Double Drawer Knee Space Unit

Each unit is supplied with two (2) lockable equal-width drawers each measuring 14-7/8”W x 18”D x 5-1/4”H. Inside measures 34”W x 27-1/2”D. This unit will be supplied with two (2) grommets located at each end of the work surface unless otherwise specified.

Catalog #	Description	Height"	Width"	Depth"	Price
CDM-3209	Elementary Height	32	36	30	
CDM-3909	Intermediate Height	39	36	30	
CDM-4209	Adult Height	42	36	30	

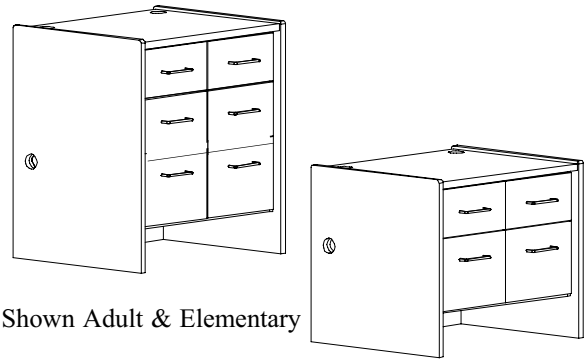

Shown Adult & Elementary

Double Drawer Stack Unit

This unit consist of a double stack of drawers. The adult height unit takes four (4) files drawers and two (2) box drawers. The intermediate unit takes four (4) file drawers. The elementary takes two (2) file drawers and two (2) box drawers. The box drawer is 14-7/8"W x 18"D x 5-1/4"H. The file drawer is 14-7/8"W x 18"D x 10.5"H. Supplied with two (2) grommets located at each end of the work surface unless otherwise specified.

Catalog #	Description	Height"	Width"	Depth"	Price
CDM-3229	Elementary Height	32	36	30	
CDM-3929	Intermediate Height	39	36	30	
CDM-4229	Adult Height	42	36	30	

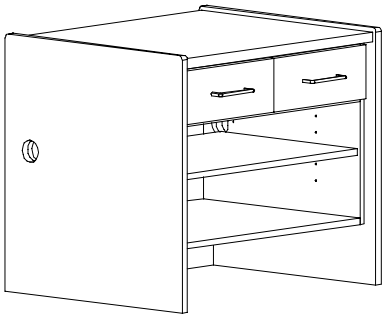

Double-Drawer Open Shelf Unit

Each unit is supplied with two equal-width locking drawers, each measuring 14-7/8"W x 18"D x 5-1/4"H over open shelving. Adult and Intermediate height units will be supplied with two full-depth adjustable shelves. Elementary height units will be supplied with one shelf. The shelf is 32-1/4”W x 23”D x 3/4”T. Supplied with two (2) grommets located at each end of the work surface unless otherwise specified.

Catalog #	Description	Height"	Width"	Depth"	Price
CDM-3237	Elementary Height	32	36	30	
CDM-3937	Intermediate Height	39	36	30	
CDM-4237	Adult Height	42	36	30	

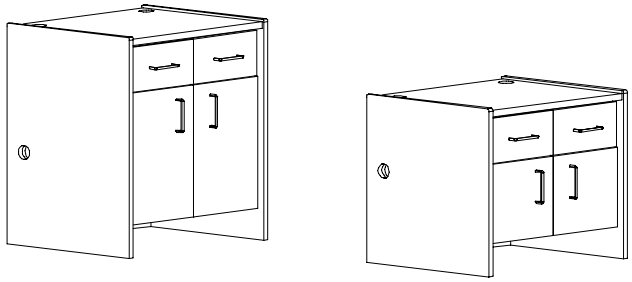

Shown Adult & Elementary

Double Drawer Cupboard Unit

Unit is supplied with two equal width box drawers, each measuring 14-7/8"W x 18"D x 5-1/4"H. These drawers are mounted over the cupboard storage space. Adult and Intermediate units have 2 adjustable shelves. Elementary unit has 1 adjustable shelf. The shelf is 34-1/4”W x 23”D x 3/4”T. Supplied with two (2) grommets located at each end of the work surface unless otherwise specified.

Catalog #	Description	Height"	Width"	Depth"	Price
CDM-3238	Elementary Height	32	36	30	
CDM-3938	Intermediate Height	39	36	30	
CDM-4238	Adult Height	42	36	30	

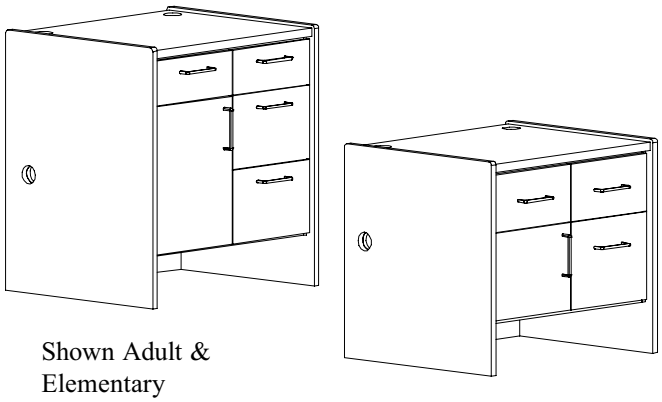

Shown Adult & Elementary

Double Drawer, *Left* Cupboard &File Unit

The left side all heights will have (1) locking box drawer over a cupboard storage area. On the right side, the adult height unit will have (1) locking box drawer, two (2) file drawers, the intermediate will have (2) file drawers, and the elementary will have (1) locking box drawer and (1) file drawer. The adult and intermediate will have (2) adjustable shelves and the elementary will have (1) adjustable shelf. The box drawers are 14-7/8"W x 18"D x 5-1/4"H. The file drawers are 14-7/8"W x 18"D x 10-1/2"H. The shelf is 15-5/8"W x 23"D x 3/4"T. Supplied with (2) grommets located at each end of the work surface unless otherwise specified.

Catalog #	Description	Height"	Width"	Depth"	Price
CDM-3254	Elementary Height	32	36	30	
CDM-3954	Intermediate Height	39	36	30	
CDM-4254	Adult Height	42	36	30	

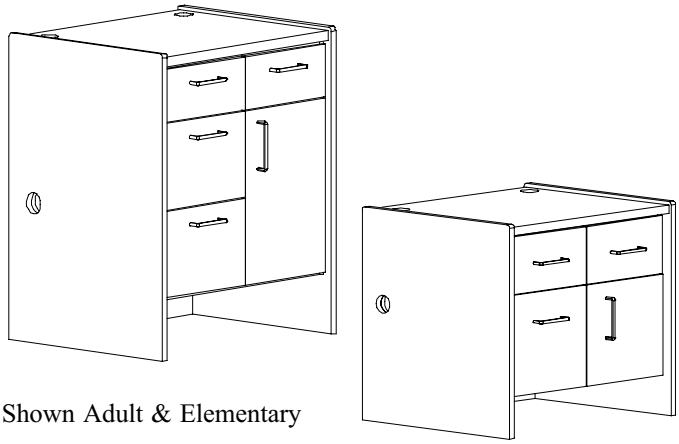

Shown Adult & Elementary

Double Drawer, *Right* Cupboard &File Unit

The right side all heights will have (1) locking box drawer over a cupboard storage area. On the left side, the adult height unit will have one (1) locking box drawer, (2) file drawers, the intermed. will have (2) file drawers, and the elementary will have (1) locking box drawer and (1) file drawer. The adult & intermed. will have (2) adjustable shelves and the elementary will have (1) adjustable shelf. The box drawers are 14-7/8"W x 18"D x 5-1/4"H. The file drawers are 14-7/8"W x 18"D x 10-1/2"H. The shelf is 15-5/8"W x 23"D x 3/4"T. Supplied with (2) grommets located at each end of the work surface unless otherwise specified.

Catalog #	Description	Height"	Width"	Depth"	Price
CDM-3241	Elementary Height	32	36	30	
CDM-3941	Intermediate Height	39	36	30	
CDM-4241	Adult Height	42	36	30	

"The only person who is educated is the one who has learned how to learn..."

Carl R. Rogers

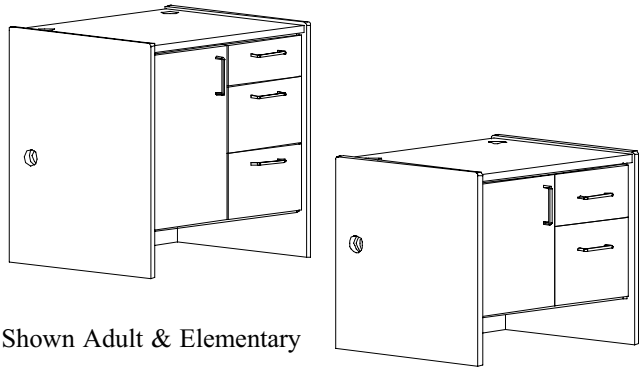

Shown Adult & Elementary

File Drawer *Left* Cupboard Unit

The cupboard unit will be on the left side, the drawer stack will be on the right side. Each adult height unit will have (1) box drawer, (2) file drawers and (2) adjustable shelves. Intermed. height units will have (2) file drawers and (2) adjustable shelves. Elem. height units have one (1) box drawer, (1) file drawer and (1) adjustable shelf. The top drawer and cupboard door will receive a lock. The box drawers are 14-7/8"W x 18"D x 5-1/4"H. The file drawers are 14-7/8"W x 18"D x 10-1/2"H. The shelf is 15-5/8”W x 23”D x 3/4”T. This unit will be supplied with (2) grommets located at each end of the work surface unless otherwise specified.

Catalog #	Description	Height"	Width"	Depth"	Price
CDM-3240	Elementary height	32	36	30	
CDM-3940	Intermediate height	39	36	30	
CDM-4240	Adult height	42	36	30	

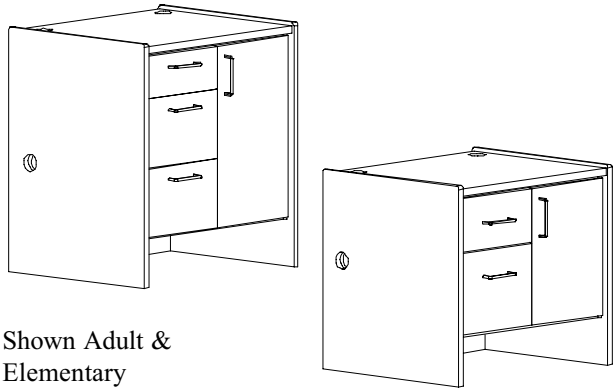

Shown Adult & Elementary

File Drawer *Right* Cupboard Unit

The drawer stack will be on the left side and the cupboard unit will be on the right side. Each adult height units will have (1) box drawer, (2) file drawers and (2) adjustable shelves. Intermed. height units will have (2) file drawers and (2) adjustable shelves. Elem. height units have (1) box drawer, (1) file drawer and (1) adjustable shelf. The top drawer and cupboard door will receive a lock. The box drawers are 14-7/8"W x 18"D x 5-1/4"H. The file drawers are 14-7/8"W x 18"D x 10-1/2"H. The shelf is 15-5/8”W x 23”D x 3/4”T. This unit will be supplied with (2) grommets located at each end of the work surface unless otherwise specified.

Catalog #	Description	Height"	Width"	Depth"	Price
CDM-3239	Elementary height	32	36	30	
CDM-3939	Intermediate height	39	36	30	
CDM-4239	Adult height	42	36	30	

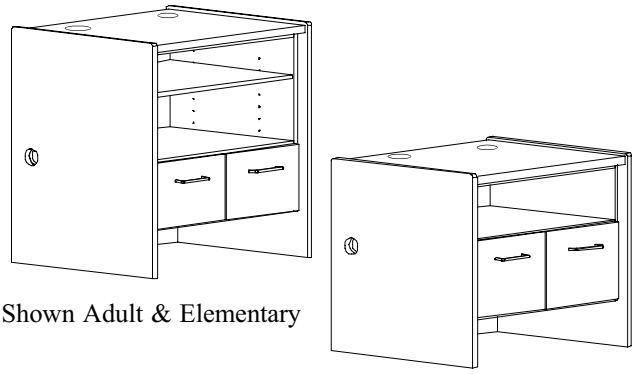

Shown Adult & Elementary

Two-Drawer File Open Top Shelf Unit

Each unit is an Open Shelf Unit with two letter file drawers. Adult and Intermediate height units are supplied with one full-depth, adjustable shelf. Elementary height units will not have an adjustable shelf. The file drawers are 14-7/8"W x 18"D x 10-1/2"H. The shelf is 15-5/8”W x 23”D x 3/4”T. This unit will be supplied with (2) grommets located at each end of the work surface unless otherwise specified.

Catalog #	Description	Height"	Width"	Depth"	Price
CDM-3214	Elementary height	32	36	30	
CDM-3914	Intermediate height	39	36	30	
CDM-4214	Adult height	42	36	30	

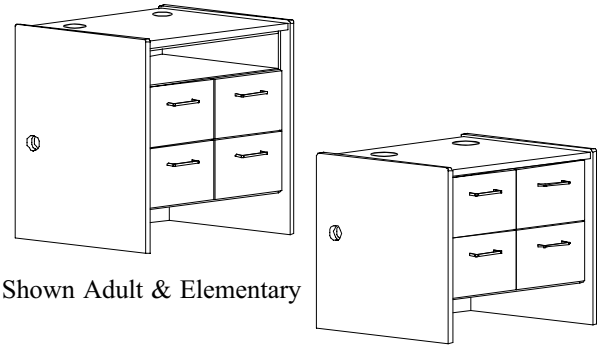

Shown Adult & Elementary

Four-Drawer File Open Top Shelf Unit

Each unit is an Open Shelf Unit with four letter file drawers. Adult and Intermediate height units have open storage provided above drawers measuring. Elementary height units will not have open storage. The file drawers are 14-7/8"W x 18"D x 10-1/2"H.

Catalog #	Description	Height"	Width"	Depth"	Price
CDM-3215	Elementary height	32	36	30	
CDM-3915	Intermediate height	39	36	30	
CDM-4215	Adult height	42	36	30	

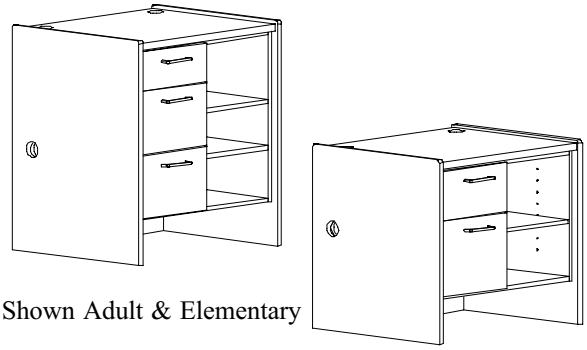

Shown Adult & Elementary

Left File Drawer Open Side Shelf Unit

The drawer stack will be on the left side and the open shelf will be on the right. Adult units have (1) lockable box drawer, 2 file drawers, and 2 adjustable shelves in the open space. Intermediate units have 2 file drawers and 2 adjustable shelves. Elementary units have 1 box drawer, 1 file drawer and 1 adjustable shelf. The box drawers are 14-7/8”W x 18”D x 5-1/4”H. The file drawers are 14-7/8"W x 18"D x 10-1/2"H. The shelf is 15-5/8”W x 23”D x 3/4”T

Catalog #	Description	Height"	Width"	Depth"	Price
CDM-3244	Elementary height	32	36	30	
CDM-3944	Intermediate height	39	36	30	
CDM-4244	Adult height	42	36	30	

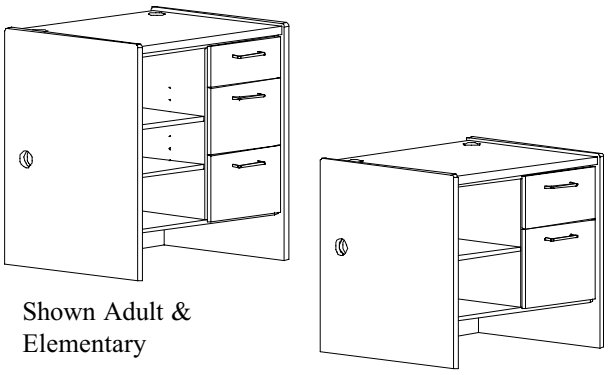

Shown Adult & Elementary

Right File Drawer Open Side Shelf Unit

The drawer stack will be on the right side and the open shelf will be on the left. Adult units have (1) lockable box drawer, 2 file drawers, and 2 adjustable shelves in the open space. Intermediate units have 2 file drawers and 2 adjustable shelves. Elementary units have 1 box drawer, 1 file drawer and 1 adjustable shelf. The box drawers are 14-7/8”W x 18”D x 5-1/4”H. The file drawers are 14-7/8"W x 18"D x 10-1/2"H. The shelf is 15-5/8”W x 23”D x 3/4”T

Catalog #	Description	Height"	Width"	Depth"	Price
CDM-3245	Elementary height	32	36	30	
CDM-3945	Intermediate height	39	36	30	
CDM-4245	Adult height	42	36	30	

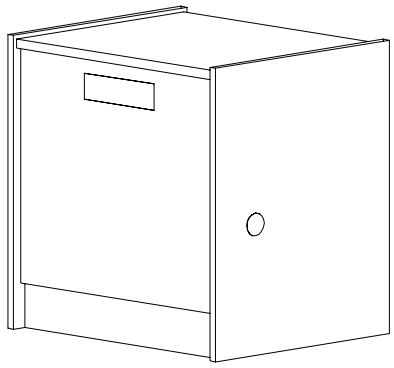

Book Return Unit

Inside dimensions are 34”W x 27-1/2”D. The front panel will have a 3"H x 12"W book-return slot, fully edgebanded, with an internal wood chute so as to allow gentle deposit of books into book truck. A rear-mounted 3/4”T edgebanded wood book chute allows for the gentle deposit of reading materials. (BT-D39 for adult & intermediate height units or BT-D32 for elementary-height units).

See Mobile Units for Depressible Book Trucks

Catalog #	Description	Height"	Width"	Depth"	Price
CDM-3205	Elementary height	32	36	30	
CDM-3905	Intermediate height	39	36	30	
CDM-4205	Adult height	42	36	30	

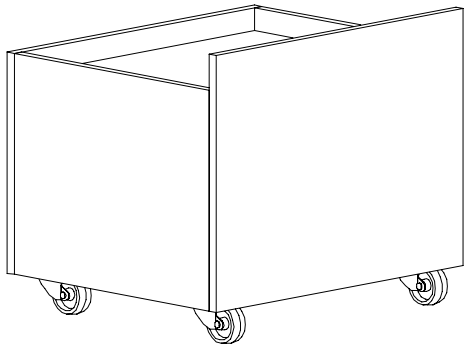

Depressible Book Truck

Each unit will have a depressible platform that will hold approximately 70 books. Each unit will have four 3" swivel casters mounted directly to a 3/4”T red oak veneer plywood bottom using 5/16” dia bolts with are received on the top size of plywood via T-nuts.

Catalog #	Description	Height"	Width"	Depth"	Price
BT-D32	Elementary height	22	26	22	
BT-D39	Adult height	29	26	22	

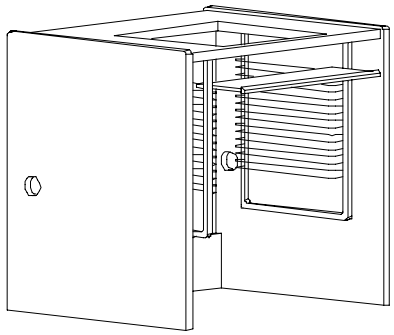

NOVA Unit

Each unit will have a NOVA assembly mounted to the underside of the work surface to accommodate a computer monitor, and pullout keyboard tray. A corresponding 18-1/4”L x 18-1/4”W viewport will be machined into the continuous top to accommodate monitor viewing.

Catalog #	Description	Height"	Width"	Depth"	Price
CDM-3230	Elementary Height	32"	36"	30"	
CDM-3930	Intermediate Height	39"	36"	30"	
CDM-4230	Adult Height	42"	36"	30"	

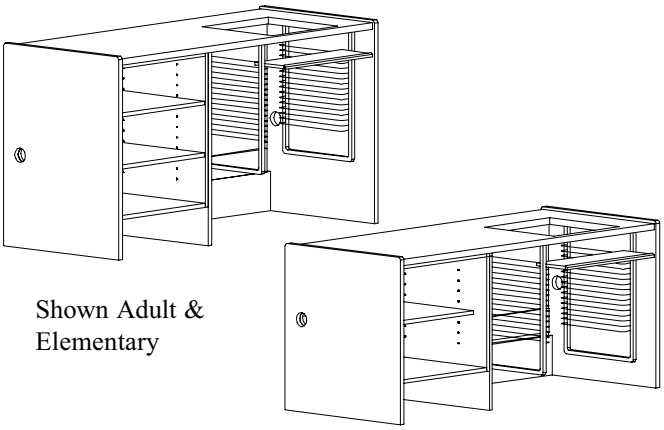

Shown Adult & Elementary

NOVA and Open Shelf Unit

Each unit will have a NOVA assembly mounted to the underside of the work surface to accommodate a computer monitor, and pullout keyboard tray. A corresponding 18-1/4”L x 18-1/4”W viewport will be machined into the continuous top to accommodate monitor viewing. Each unit will also have adjustable shelves measuring 23-3/4”W x 27-1/2”D. Adult and Intermediate height units will have two (2) adjustable shelves and elementary height units will have one (1) adjustable shelf.

Catalog #	Description	Height"	Width"	Depth"	Price
CDM-3231	Elementary Height	32	72	30	
CDM-3931	Intermediate Height	39	72	30	
CDM-4231	Adult Height	42	72	30	

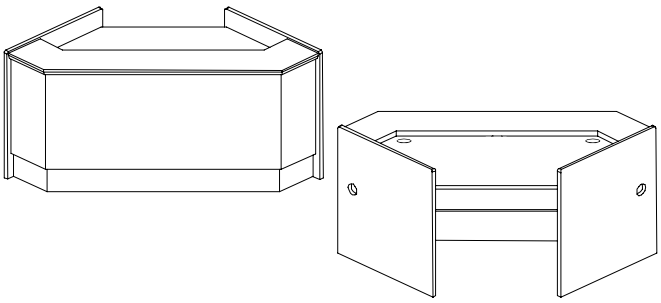

Corner Patron Desk Unit

Each unit is designed to provide a 90-degree transition in any desk arrangement, while providing a corner work space with a recessed work surface and patron ledge. The recessed work surface will be mounted at 29”H using metal cleats. The working width for staff-side accessibility will be 35”W. This unit is supplied with two (2) work surface grommets located at each end unless otherwise specified. The patron ledge is 6” deep.

Catalog #	Description	Height"	Width"	Depth"	Price
CDM-3232	Elementary Height	32	78-5/8	30	
CDM-3932	Intermediate Height	39	78-5/8	30	
CDM-4232	Adult Height	42	78-5/8	30	

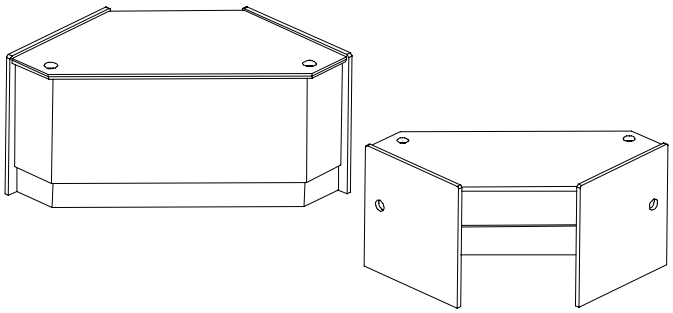

Corner Desk Unit

Each unit is designed to provide a 90-degree transition in any desk arrangement, while providing a corner work space. The working width for staff-side accessibility will be 35”W. This unit is supplied with two (2) work surface grommets located at each end unless otherwise specified.

Catalog #	Description	Height"	Width"	Depth"	Price
CDM-3233	Elementary Height	32	78-5/8	30	
CDM-3933	Intermediate Height	39	78-5/8	30	
CDM-4233	Adult Height	42	78-5/8	30	

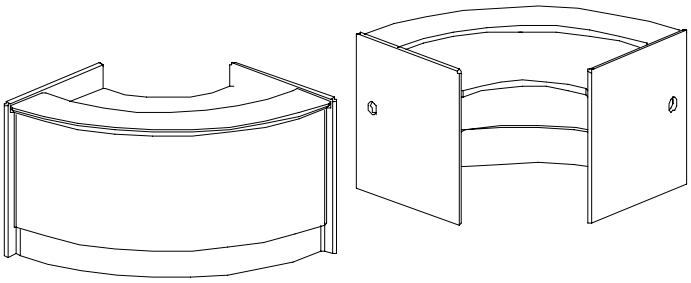

Rounded Corner Patron Desk Unit

Each unit is designed to provide a radiused 90-degree transition in any desk arrangement, while providing a corner work space with a recessed work surface and patron ledge. The recessed work surface will be mounted at 29”H using metal cleats. The working width for staff-side accessibility will be 35”W. This unit is supplied with two (2) work surface grommets located at each end unless otherwise specified. The patron ledge is 6”D.

Catalog #	Description	Height"	Width"	Depth"	Price
CDM-3250	Elementary Height	32	78-5/8"	30	
CDM-3950	Intermediate Height	39	78-5/8"	30	
CDM-4250	Adult Height	42	78-5/8"	30	

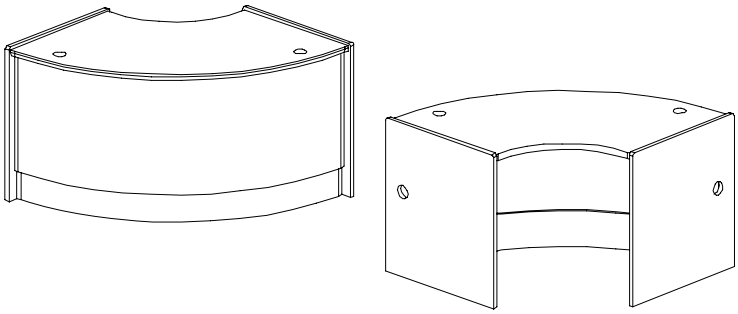

Rounded Corner Desk Unit

Each unit is designed to provide a radiused 90-degree transition in any desk arrangement, while providing a corner work space. The working width for staff-side accessibility will be 35”W. This unit is supplied with two (2) work surface grommets located at each end unless otherwise specified.

Catalog #	Description	Height"	Width"	Depth"	Price
CDM-3251	Elementary Height	32	78-5/8"	30	
CDM-3951	Intermediate Height	39	78-5/8"	30	
CDM-4251	Adult Height	42	78-5/8"	30	

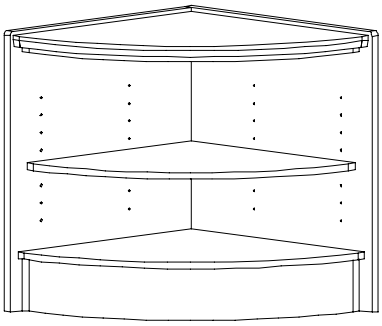

90 Degree Radiused Corner Open Shelf Unit

Each unit will be triangular, with a radiused, open-face design and will be used to form a 90-degree transition in any desk arrangement. Adult and Intermediate height units will be supplied with two (2) adjustable shelves and elementary height units will be supplied with one (1) adjustable shelf. Open shelf corner units do not provide for wire access. Shelves will be accessible from patron side of circulation desk.

Catalog #	Description	Height"	Width"	Depth"	Price
CDM-3228	Elementary Height	32	30	30	
CDM-3928	Intermediate Height	39	30	30	
CDM-4228	Adult Height	42	30	30	

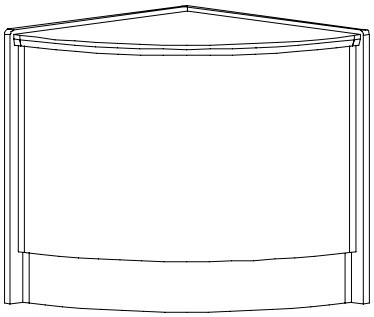

90 Degree Radiused Closed Corner Unit

Each unit will be triangular, with a radiused, closed-face design and will be used to form a 90-degree transition in any desk arrangement. This unit is supplied with an internal wire manager unless otherwise specified.

Catalog #	Description	Height"	Width"	Depth"	Price
CDM-3226	Elementary Height	32	30	30	
CDM-3926	Intermediate Height	39	30	30	
CDM-4226	Adult Height	42	30	30	

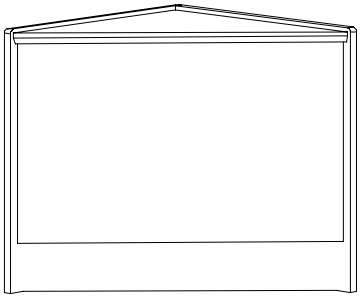

90 Degree Flat Corner Unit

Each unit will be triangular with a flat closed -front design and will be used to form a 90-degree transition in any desk arrangement. This unit is supplied with an internal wire manager unless otherwise specified.

Catalog #	Description	Height"	Width"	Depth"	Price
CDM-3252	Elementary Height	32	30	30	
CDM-3952	Intermediate Height	39	30	30	
CDM-4252	Adult Height	42	30	30	

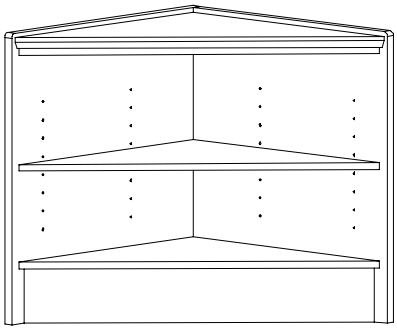

90 Degree Flat Corner Open Shelf Unit

Each unit will be triangular with an flat open-front design and will be used to form a 90-degree transition in any desk arrangement. Each unit will have one (1) fixed base shelf and adjustable shelves according to unit height. Adult and Intermediate height units will be supplied with two (2) adjustable shelves and elementary height units will be supplied with one (1) adjustable shelf. Shelves will be accessible from patron side of circulation desk. Open shelf corner units do not provide for wire access.

Catalog #	Description	Height"	Width"	Depth"	Price
CDM-3223	Elementary Height	32	36	30	
CDM-3923	Intermediate Height	39	36	30	
CDM-4223	Adult Height	42	36	30	

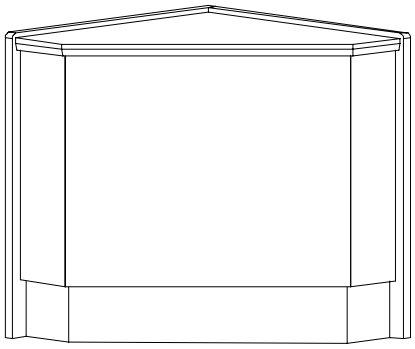

90 Degree Closed Corner Unit

Each unit will be triangular with an angled, closed-face design and will be used to form a 90-degree transition in any desk arrangement. This unit is supplied with an internal wire manager unless otherwise specified.

Catalog #	Description	Height"	Width"	Depth"	Price
CDM-3216	Elementary Height	32	30	30	
CDM-3916	Intermediate Height	39	30	30	
CDM-4216	Adult Height	42	30	30	

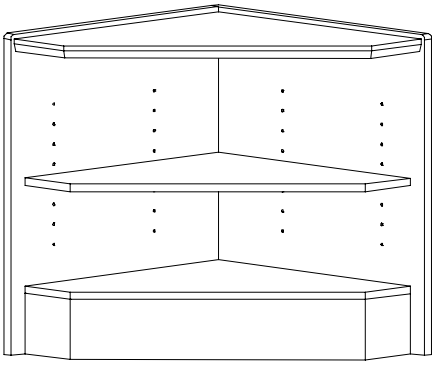

90 Degree Corner Open Shelf Unit

Each unit will be triangular with an angled open-front design and will be used to form a 90-degree transition in any desk arrangement. Each unit will have one (1) fixed base shelf and adjustable shelves according to unit height. Adult and Intermediate height units will be supplied with two (2) adjustable shelves and elementary-height units will be supplied with one (1) adjustable shelf. Shelves will be accessible from patron side of circulation desk. Open shelf corner units do not provide for wire access.

Catalog #	Description	Height"	Width"	Depth"	Price
CDM-3217	Elementary Height	32	30	30	
CDM-3917	Intermediate Height	39	30	30	
CDM-4217	Adult Height	42	30	30	

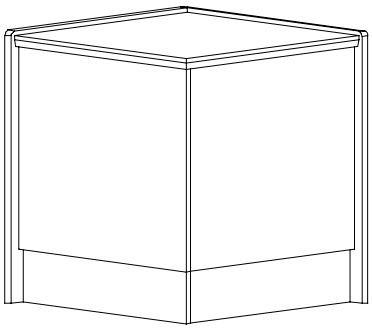

Square Corner Unit

Each unit will be square, closed-face design and will be used to form a 90-degree transition in any desk arrangement. This unit is supplied with an internal wire manager unless otherwise specified.

Catalog #	Description	Height"	Width"	Depth"	Price
CDM-3224	Elementary Height	32	30	30	
CDM-3924	Intermediate Height	39	30	30	
CDM-4224	Adult Height	42	30	30	

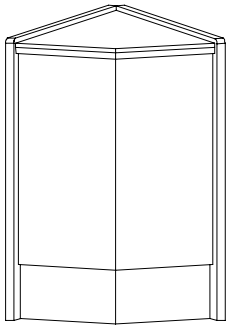

45 Degree Closed Corner Unit

Each unit will be triangular, with an angled, closed-face design and will be used to form a 45-degree transition in any desk arrangement. This unit is supplied with an internal wire manager unless otherwise specified.

Catalog #	Description	Height"	Width"	Depth"	Price
CDM-3225	Elementary Height	32	21	30	
CDM-3925	Intermediate Height	39	21	30	
CDM-4225	Adult Height	42	21	30	

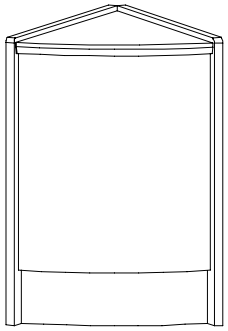

45 Degree Radiused Corner Unit

Each unit will be triangular, with a radiused, closed-face design and will be used to form a 45-degree transition in any desk arrangement. This unit is supplied with an internal wire manager unless otherwise specified.

Catalog #	Description	Height"	Width"	Depth"	Price
CDM-3227	Elementary Height	32	21	30	
CDM-3927	Intermediate Height	39	21	30	
CDM-4227	Adult Height	42	21	30	

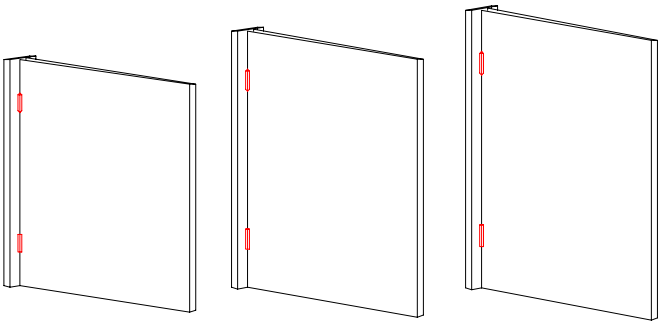

Swinging Gate

When specified, gates will be mounted to walls or finished end panels on the circulation desk. Gates will be constructed using banded, matching 1”T veneer-core plywood in widths of up to 36". Single-action gates are supplied with stop moulding. **The desired width of the gate and hinge type (single or double action) MUST BE quoted in advance and specified on the order.**

Catalog #	Description	Height"	Width"	Thickness"	Price
CDM-1G 32	Elementary height, single action hinge	32	Specify	1	based on width
CDM-2G 32	Elementary height, double action hinge	32	Specify	1	based on width
CDM-1G 39	Intermediate height, single action hinge	39	Specify	1	based on width
CDM-2G 39	Intermediate height, double action hinge	39	Specify	1	based on width
CDM-1G 42	Adult height, single action hinge	42	Specify	1	based on width
CDM-2G 42	Adult height, double action hinge	42	Specify	1	based on width

Planning For & Ordering Edgeband for ModuFlex Series

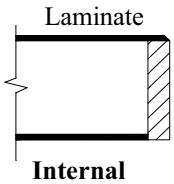

Staff side of the work surface comes with a 1/4" internal solid red oak edgeband.

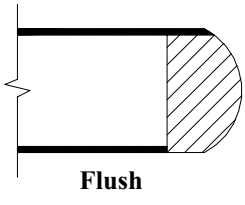

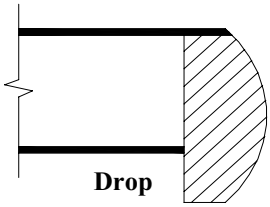

When choosing an edgeband for patron side you can either have the edgeband placed flush with the bottom of the top or dropped below the bottom.

Work surfaces will be constructed with a 3/4"T solid red oak edgeband and can be ordered with any one of a variety of internal or external edgeband details.

See below for edge details for the ModuFlex Series.

Edge Details for ModuFlex Series

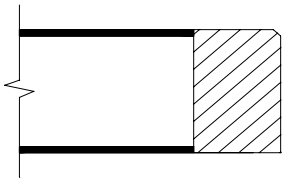

1 1/4" thick top (External)
Montana Flush

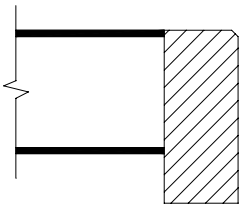

1 1/4" thick top (External)
Montana Drop

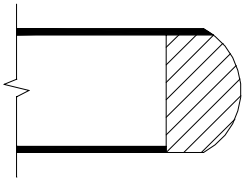

1 1/4" thick top (Internal)
Shallow Bullnose Flush

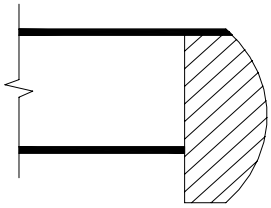

1 1/4" thick top (Internal)
Shallow Bullnose Drop

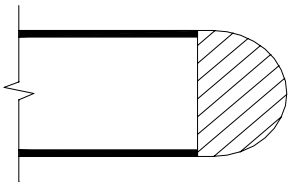

1 1/4" thick top (External)
Bullnose Flush

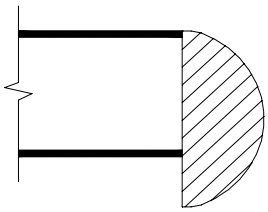

1 1/4" thick top (External)
Bullnose Drop

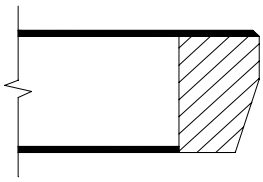

1 1/4" thick top (Internal)
Premier Flush

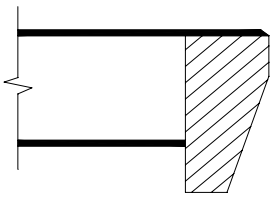

1 1/4" thick top (Internal)
Premier Drop

GENERAL SPECIFICATIONS
The Orbis Series is designed to blend high utility with the warmth of beautiful curves.

CONSTRUCTION AND MATERIALS
Each desk unit end panel will be constructed from 1”T multi-ply, cross-grain, plain-slice face veneer plywood. Front panels are 3/4”T multi-ply, cross-grain, rift-cut faced veneer plywood. All other panels will be multi-ply, cross-grain, plain-slice face veneer plywood.

The exposed edges of all unit panels will be banded with 1/4”T matching solid red oak. All *end panel edges* will be banded with 1/2”T matching solid wood.

Front panels will be matched for color and grain characteristics to provide uniformity of grain across the entire desk arrangement. Each unit is constructed with a 4”H x 3”D toe space covered with flat black laminate on the patron and staff side.

Adjustable shelves will be constructed from matching 3/4”T multi-ply, cross-grain, plain-slice face veneer plywood. Shelves will be adjustable on no greater than 2” centers supported by 1/4” shelf pins. The exposed edges of all shelves will be banded with 1/4”T eased matching solid red oak.

Individual tops will be 1-1/8”T particleboard* with .050” high pressure laminate on the face and .020 backer sheet on the underside of the top. Laminiate color is chosen from supplied color samples. The entire top will be internally banded with 1/4”T matching solid red oak on the staff side and 3/4”T matching solid red oak on the patron side.

HARDWARE
All wire grommets through the work surface will be 3”Dia. All units except the Book Return will be constructed with a wire chase in the base of the unit with a removable top for ease of access. Access between unit wire chases is provided through 3” grommets in the base of the each end panel.

Full width and box drawers will be of English dovetail design and will be constructed using 1/2" thick solid northern grown red oak with a 1/4" thick veneer core plywood bottom.

The box drawer is 14-7/8"W x 18"D x 5-1/4"H. The single drawer is 33-1/2” x 18”D x 5-1/4”H.

Drawer glides, pulls All drawers will be constructed to an overall depth of 18" and will be mounted on 18" full-extension, ballbearing glides with a load rating of 100 pounds per pair. On a given desk arrangement, all locks will be keyed identically. All doors will be hung with 110-degree opening, self-closing Salice hinges (180-degree available if specified) and and Salice Smove(tm) door cushions.

Pulls for drawers will be satin chrome 5/16" diameter wire pulls. Pull substitutions may be made at customer's request [an additional cost may occur].

All door units will be provided with locks. Pulls for both doors and drawers will be satin chrome 5/16" diameter wire pulls. Pull substitutions may be made at customer's request [an aditional cost may occur].

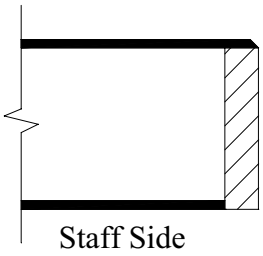

Staff side work surfaces are internally banded with 1/4”T solid red oak.

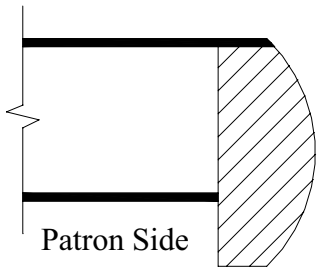

The Patron side is banded with 3/4’T solid red oak with a Bullnose Drop edge detail.

FINISH - See page 5 for finish specifications.

Visit out website at ***www.russwood.net***

Orbis Classic

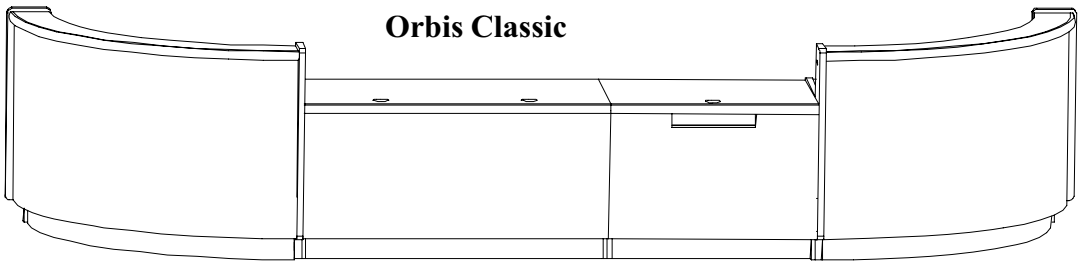

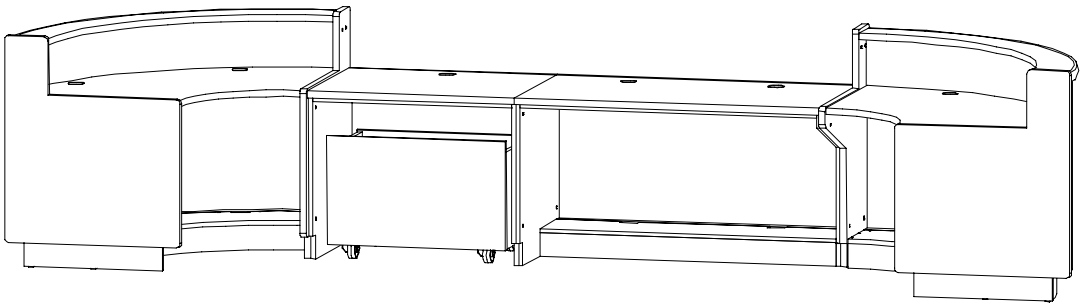

Orbis Major

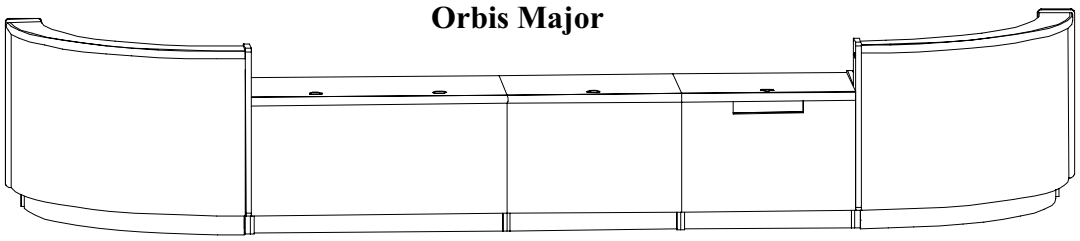

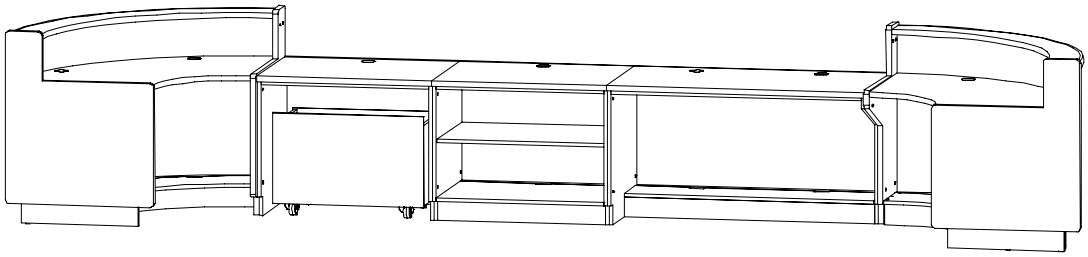

The *Orbis Series* circulation desks feature the stylish rounded corner patron service units with work surfaces permanently attached

Orbis Classic

Includes these units
CDO-2901
CDO-2903
CDO-2905
CDO-2907
BT-D29

Orbis Major

Includes these units
CDO-2901
CDO-2903
CDO-2905
CDO-2907
CDO-2908
BT-D29

If you desire a service unit that is not shown here then you can choose from the many others that follow.

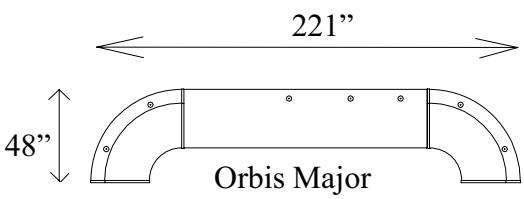

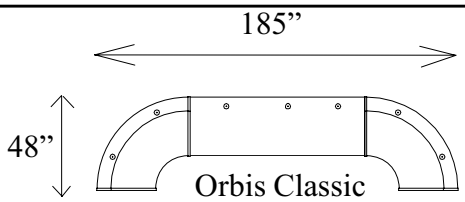

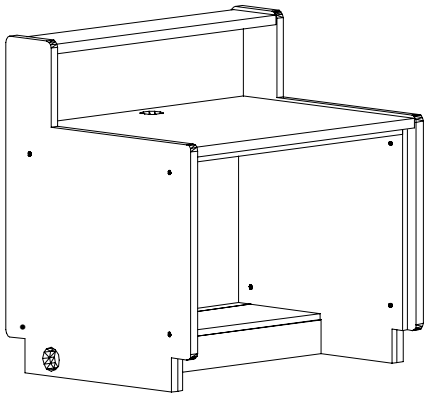

Patron Desk Unit

The work surface of this unit is 29"H. The patron ledge is 7" deep. A grommet is located at the midpoint of the top. This unit also includes a wire chase in the base with a removable access cover for easy accessibility.

Catalog #	Description	Over All Height "	Work Surface Ht"	Width"	Depth"	Price
CDO-2912	Patron Desk Unit	39-1/4	29	38	30-1/2	

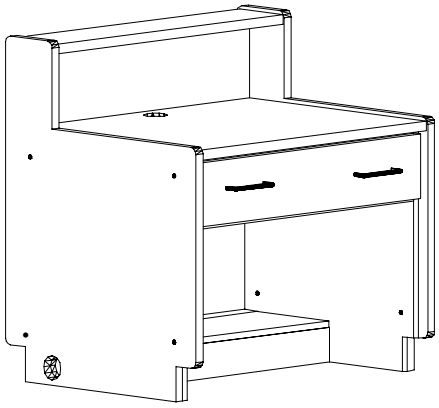

Patron Single Drawer Knee Space Unit

The work surface of this unit is 29"H. The patron ledge is 7" deep. A grommet is located at the midpoint of the top. This unit also includes a wire chase in the base with a removable access cover for easy accessibility. Each unit will have one (1) drawer measuring 33-1/2"W x 18"D x 5-1/4"H.

Catalog #	Description	Over All Height "	Work Surface Ht"	Width"	Depth"	Price
CDO-2913	Patron Sing Drawer Knee Space Unit	39-1/4	29	38	30-1/2	

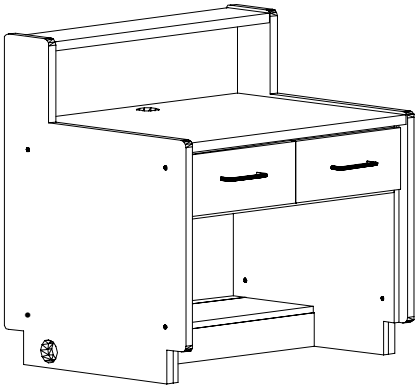

Patron Double Drawer Knee Space Unit

The work surface of this unit is 29"H. The patron ledge is 7" deep. A grommet is located at the midpoint of the top. This unit also includes a wire chase in the base with a removable access cover for easy accessibility. Each unit will have two (2) equal-width drawers measuring 14-7/8"W x 18"D x 5-1/4"H.

Catalog #	Description	Over All Height "	Work Surface Ht"	Width"	Depth"	Price
CDO-2910	Patron Doub Drawer Knee Space Unit	39-1/4	29	38	30-1/2	

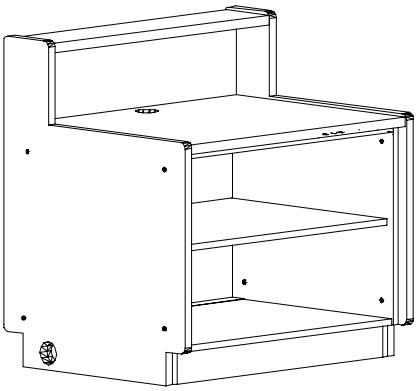

Patron Open Shelf Unit

The work surface of this unit is 29"H. The patron ledge is 7" deep. A grommet is located at the midpoint of the top. This unit also includes a wire chase in the base with a removable access cover for easy accessibility. The open shelf compartment has one adjustable shelf. The shelf is 34-1/4”W x 26”D x 3/4”T.

Catalog #	Description	Over All Height "	Work Surface Ht"	Width"	Depth"	Price
CDO-2911	Patron Open Shelf Unit	39-1/4	29	38	30-1/2	

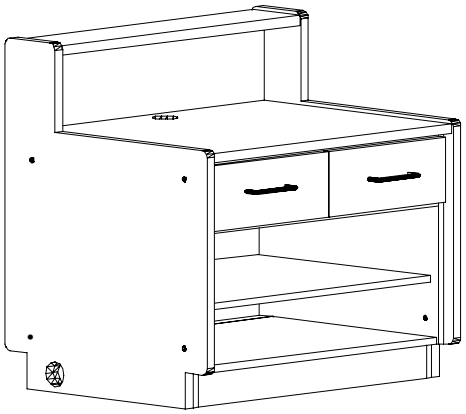

Patron Double Drawer Open Shelf Unit

The work surface of this unit is 29"H. The patron ledge is 7" deep. A grommet is located at the midpoint of the top. This unit also includes a wire chase in the base with a removable access cover for easy accessibility. Each unit will have two (2) equal-width drawers measuring 14-7/8"W x 18"D x 5-1/4"H. The open shelf compartment has one adjustable shelf. The shelf is 34-1/4”W x 26”D x 3/4”T.

Catalog #	Description	Over All Height "	Work Surface Ht"	Width"	Depth"	Price
CDO-2909	Patron Doub Drawer Open Shelf Unit	39-1/4	29	38	30-1/2	

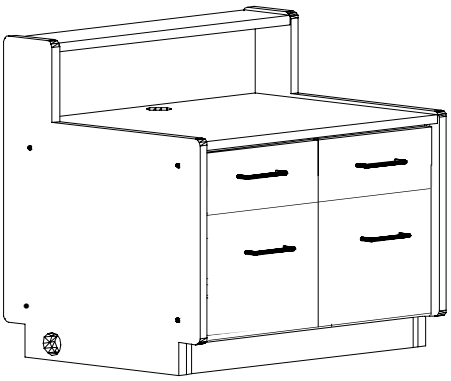

Patron Drawer Unit

The work surface of this unit is 29"H. The patron ledge is 7" deep. A grommet is located at the midpoint of the top. This unit also includes a wire chase in the base. Drawers are removeable for access to wire chase. Each unit will have two (2) equal-width drawer stacks containing a box drawer and file drawer. Box drawers measure 14-7/8"W x 18"D x 5-1/4"H. File drawers measure 14-7/7”W x 18”D x 10-1/2”H.

Catalog #	Description	Over All Height "	Work Surface Ht"	Width"	Depth"	Price
CDO-2926	Patron Drawer Unit	39-1/4	29	38	30-1/2	

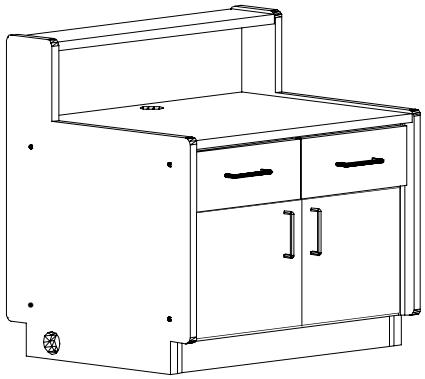

Patron Double Drawer Cupboard Unit

The work surface of this unit is 29"H. The patron ledge is 7" deep. A grommet is located at the midpoint of the top. This unit also includes a wire chase in the base with a removable access cover for easy accessibility. Each unit will have two (2) box drawers measuring 14-7/8"W x 18"D x 5-1/4"H. The cupboard has one adjustable shelf. The shelf is 34-1/4”W x 26”D x 3/4”T.

Catalog #	Description	Over All Height "	Work Surface Ht"	Width"	Depth"	Price
CDO-2927	Patron Double Drawer Cupboard Unit	39-1/4	29	38	30-1/2	

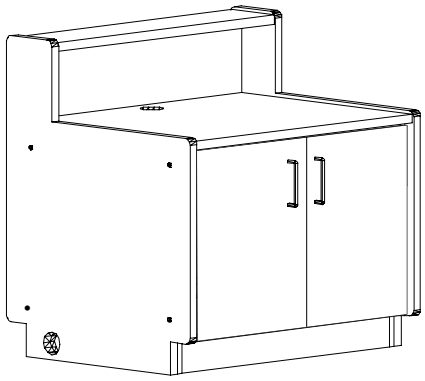

Patron Cupboard Unit

The work surface of this unit is 29"H. The patron ledge is 7" deep. A grommet is located at the midpoint of the top. This unit also includes a wire chase in the base with a removable access cover for easy accessibility. The cupboard has one adjustable shelf. The shelf is 34-1/4”W x 26”D x 3/4”T.

Catalog #	Description	Over All Height "	Work Surface Ht"	Width"	Depth"	Price
CDO-2928	Patron Cupboard Unit	39-1/4	29	38	30-1/2	

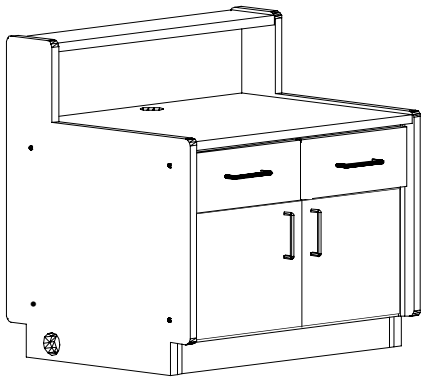

Patron Single Drawer Cupboard Unit

The work surface of this unit is 29"H. The patron ledge is 7" deep. A grommet is located at the midpoint of the top. This unit also includes a wire chase in the base with a removable access cover for easy accessibility. Each unit will have 1 full width drawer measuring 33-1/2"W x 18"D x 5-1/4"H. The cupboard has one adjustable shelf. The shelf is 34-1/4”W x 26”D x 3/4”T.

Catalog #	Description	Over All Height "	Work Surface Ht"	Length"	Width"	Price
CDO-2914	Patron Single Drawer Cupboard	39-1/4	29	38	30-1/2	

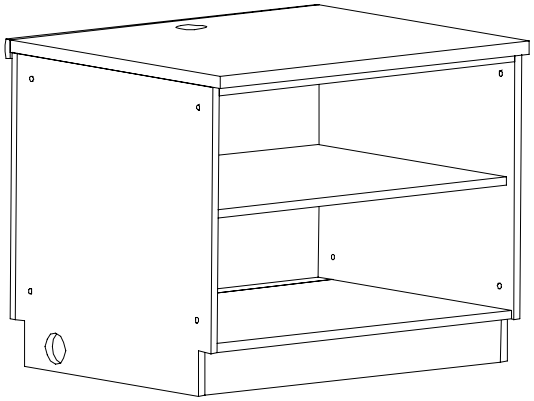

Open Shelf Unit

The work surface of this unit is 29"H. A grommet is located at the midpoint of the top. This unit also includes a wire chase in the base with a removable access cover for easy accessibility. The open shelf compartment has one adjustable shelf. The shelf is 34-3/8”W x 26”D x 3/4”T.

Catalog #	Description	Over All Height "	Work Surface Ht"	Width"	Depth"	Price
CDO-2908	Open Shelf Unit	29	29	36	30	

Double Drawer Open Shelf Unit

The work surface of this unit is 29"H. A grommet is located at the midpoint of the top. This unit also includes a wire chase in the base with a removable access cover for easy accessibility. Each unit will have two (2) equal-width drawers measuring 14-7/8"W x 18"D x 5-1/4"H. The open shelf compartment has one adjustable shelf. The shelf is 34-1/4”W x 26”D x 3/4”T.

Catalog #	Description	Over All Height "	Work Surface Ht"	Width"	Depth"	Price
CDO-2929	Double Drawer Open Shelf Unit	29	29	36	30	

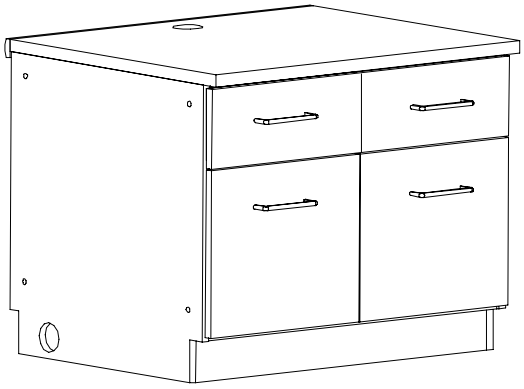

File Drawer Unit

The work surface of this unit is 29"H. A grommet is located at the midpoint of the top. This unit also includes a wire chase in the base with a removable access cover for easy accessibility. Each unit will have two (2) equal-width drawer stacks containing a box drawer and file drawer. Box drawers measure 14-7/8"W x 18"D x 5-1/4"H. File drawers measure 14-7/8”W x 1x 18”D x 10-1/2”H.

Catalog #	Description	Over All Height "	Work Surface Ht"	Width"	Depth"	Price
CDO-2930	Drawer Unit	29	29	36	30	

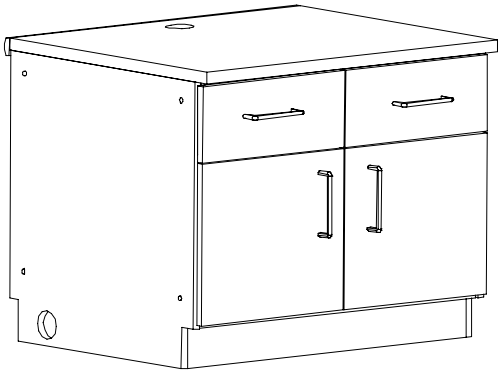

Double Drawer Cupboard Unit

The work surface of this unit is 29"H. A grommet is located at the midpoint of the top. This unit also includes a wire chase in the base with a removable access cover for easy accessibility. Each unit will have two (2) box drawers measuring 14-7/8"W x 18"D x 5-1/4"H. The cupboard has one adjustable shelf. The shelf is 34-1/4”W x 26”D x 3/4”T.

Catalog #	Description	Over All Height "	Work Surface Ht"	Width"	Depth"	Price
CDO-2931	Double Drawer Cupboard Unit	29	29	36	30	

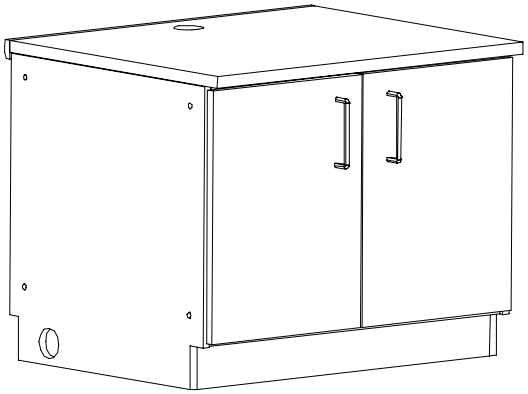

Cupboard Unit

The work surface of this unit is 29"H. A grommet is located at the midpoint of the top. This unit also includes a wire chase in the base with a removable access cover for easy accessibility. The cupboard has one adjustable shelf. The shelf is 34-1/4”W x 26”D x 3/4”T.

Catalog #	Description	Over All Height "	Work Surface Ht"	Width"	Depth"	Price
CDO-2932	Cupboard Unit	29	29	36	30	

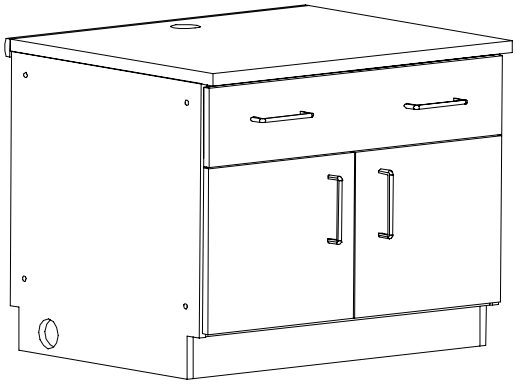

Single Drawer Cupboard Unit

The work surface of this unit is 29"H. A grommet is located at the midpoint of the top. This unit also includes a wire chase in the base with a removable access cover for easy accessibility. Each unit will have 1 full width drawer measuring 31-1/2"W x 18"D x 5-1/4"H. The cupboard has one adjustable shelf. The shelf is 34-1/4”W x 26”D x 3/4”T.

Catalog #	Description	Over All Height "	Work Surface Ht"	Width"	Depth"	Price
CDO-2933	Single Drawer Cupboard Unit	29	29	36	30	

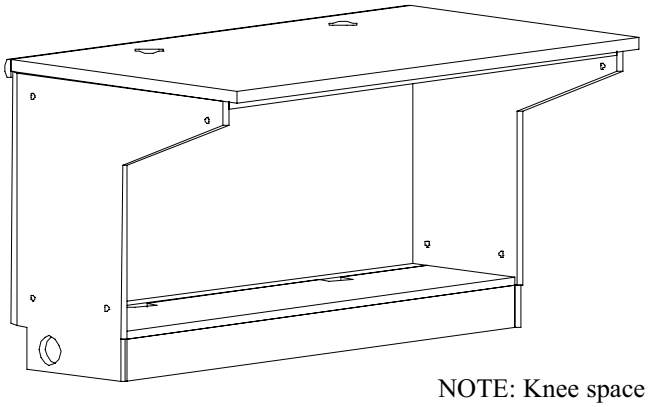

Computer Desk
Double Knee Space

This unit provides continuous knee space on both sides. The work surface of this unit is 29"H. Two grommets are located at the rear approximately one quarter from each side. This unit also includes a wire chase in the base with a removable access cover for easy accessibility.

NOTE: Knee space end panels only connect to knee space end panels.

Catalog #	Description	Over All Height "	Work Surface Ht"	Width"	Depth"	Price
CDO-2915	Double Knee Space Computer Desk	29	29	53	30	

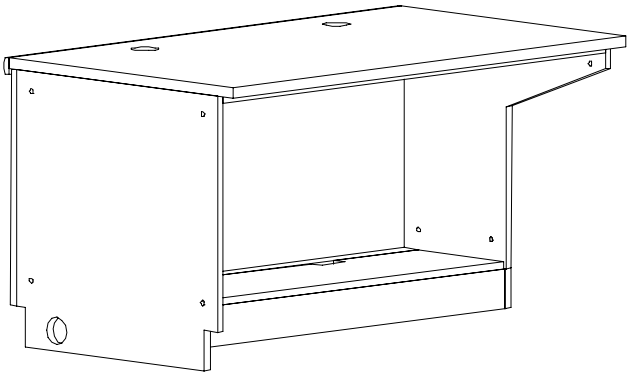

Computer Desk
Left Connector *Right* Knee Space

This unit provides knee space access on the right side.The work surface of this unit is 29"H. Two grommets are located at the rear approximately one quarter from each side. This unit also includes a wire chase in the base with a removable access cover for easy accessibility.

NOTE: Knee space end panels only connect to knee space end panels.

Catalog #	Description	Over All Height "	Work Surface Ht"	Width"	Depth"	Price
CDO-2905	Double Right Knee Computer Desk	29	29	53	30	

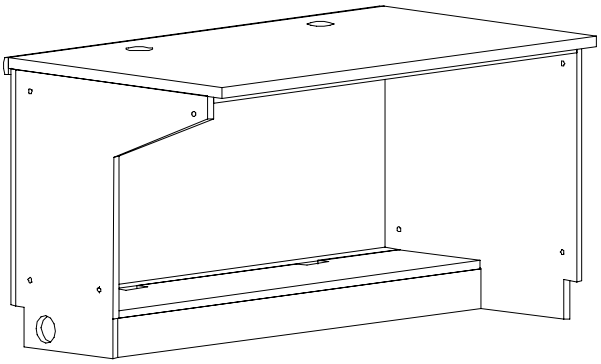

Computer Desk
Left Knee Space *Right* Connector

This unit provides knee space access on the left side. The work surface of this unit is 29"H. Two grommets are located at the rear approximately one quarter from each side. This unit also includes a wire chase in the base with a removable access cover for easy accessibility.

NOTE: Knee space end panels only connect to knee space end panels.

Catalog #	Description	Over All Height "	Work Surface Ht"	Width"	Depth"	Price
CDO-2906	Double Left Knee Computer Desk	29	29	53	30	

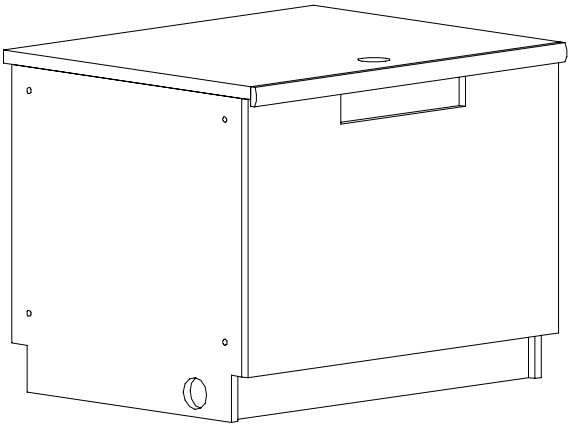

Book Return

The work surface of this unit is 29"H. This unit also includes J-Channel wire management along the back of the unit. The front panel will have a 14"W x 3"H book-return slot, fully edge banded, with an internal wood chute so as to allow gentle deposit of books into book truck. The depressible book truck that is used with this unit BT-D29 is ordered separately.

Catalog #	Description	Over All Height "	Work Surface Ht"	Width"	Depth"	Price
CDO-2907	Book Return Unit	29	29	36	30	

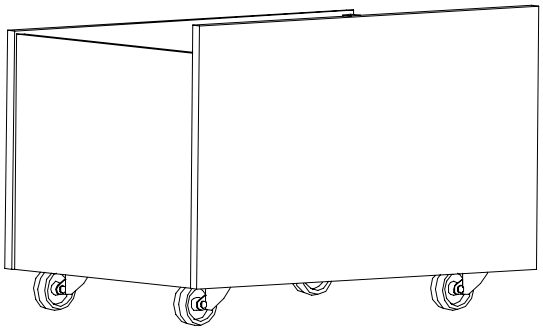

Depressible Book Truck

Each unit will have a depressible platform that will hold approximately 70 books. Depressible book trucks employ a spring mechanism which allows for the gentle deposit of reading materials by reducing the distance a book must drop once deposited. Each unit will have four 3" swivel casters directly bolted to the bottom of the book truck to ensure stability.

Catalog #	Description	Over All Height "	Work Surface Ht"	Width"	Depth"	Price
BT-D29	Depressible Book Truck	20-15/16		31	21	

"Try not to have a good time...
— this is supposed to be educational."

— Charles M. Shultz

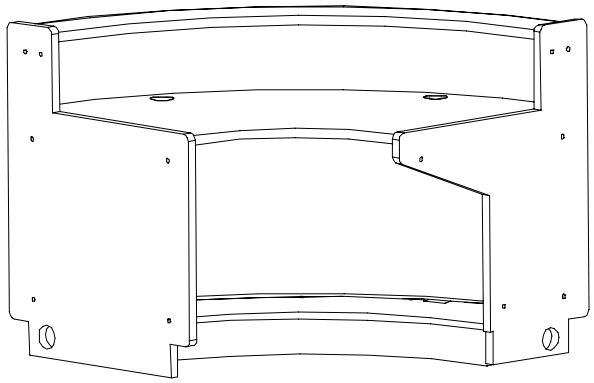

See unit CDO 2902 if Left finished end is desired.

90 Degree Corner Patron Desk
Left Connector *Right* Knee Space

This unit provides continuous knee space on the right side. The work surface of this unit is 29"H. The patron ledge is 7" deep. Two grommets are located at the rear approximately one quarter from each side. This unit also includes a wire chase in the base with a removable access cover for easy accessibility.

NOTE: Knee space end panels only connect to knee space end panels.

Catalog #	Description	Over All Height "	Work Surface Ht"	Width"	Depth"	Price
CDO-2916	90° (R) Knee Corner Patron Desk	39-3/4	29	48	48	

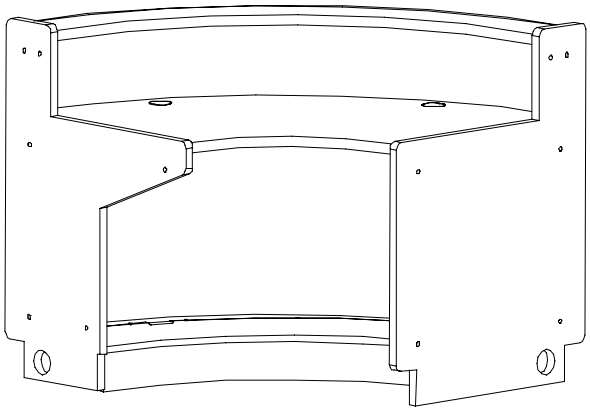

See CDO 2901 if Right Finished end is desired.

90 Degree Corner Patron Desk
Left Knee Space *Right* Connector

This unit provides continuous knee space on left side. The work surface of this unit is 29"H. The patron ledge is 7" deep. Two grommets are located at the rear approximately one quarter from each side. This unit also includes a wire chase in the base with a removable access cover for easy accessibility.

NOTE: Knee space end panels only connect to knee space end panels.

Catalog #	Description	Over All Height "	Work Surface Ht"	Width"	Depth"	Price
CDO-2917	90° (L) Knee Corner Patron Desk	39-3/4	29	48	48	

"They say that we are better educated than our parents' generation. What they mean is that we go to school longer. It is not the same thing."
Richard Yates

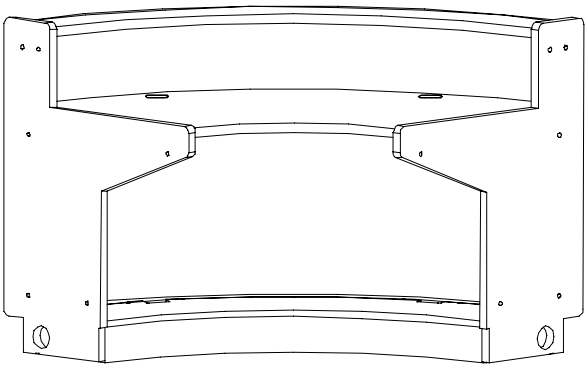

NOTE: Knee space end panels only connect to knee space end panels.

90 Degree Corner Patron Desk Double Knee Space

This unit provides continuous knee space on both sides. The work surface of this unit is 29"H. The patron ledge is 7" deep. Two grommets are located at the rear approximately one quarter from each side. This unit also includes a wire chase in the base with a removable access cover for easy accessibility.

Catalog #	Description	Over All Height "	Work Surface Ht"	Width"	Depth"	Price
CDO-2921	90° Double Knee Corner Patron	39-3/4	29	48	48	

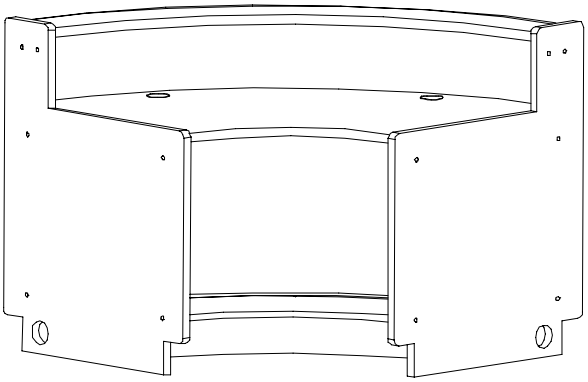

See CDO-2903 or CDO-2904 if finished end panel is desired.

90 Degree Corner Patron Desk Double Connector

The work surface of this unit is 29"H. The patron ledge is 7" deep. Two grommets are located at the rear approximately one quarter from each side.This unit also includes a wire chase in the base with a removable access cover for easy accessibility.

Catalog #	Description	Over All Height "	Work Surface Ht"	Width"	Depth"	Price
CDO-2918	90° Double Connect Corner Patron	39-3/4	29	48	48	

"Education would be much more effective if its purpose was to ensure that by the time they leave school every boy and girl should know how much they do not know, and be imbued with a lifelong desire to know it."
William Halley

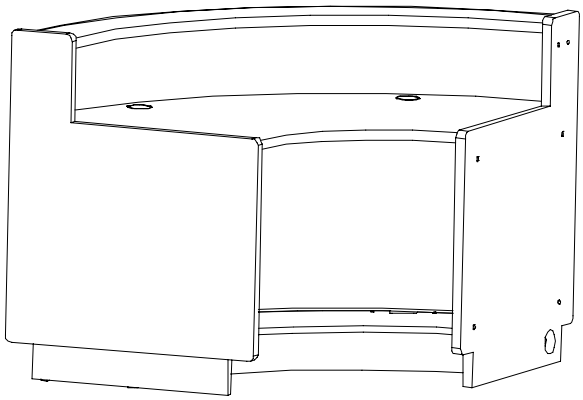

Constructed w/ Finished End

90 Degree Corner Patron Desk
Left Finished End *Right* Connector

The work surface of this unit is 29"H. The patron ledge is 7" deep. Two grommets are located at the rear approximately one quarter from each side. The left side of this unit provides a finished end with a matching flat black laminate toe kick. This unit also includes a wire chase in the base with a removable access cover for easy accessibility.

This unit can only connect to other units on the right panel.

Catalog #	Description	Over All Height "	Work Surface Ht"	Width"	Depth"	Price
CDO-2903	90° (L) Finish (Rt) Connect Patron Desk	39-3/4	29	48	48	

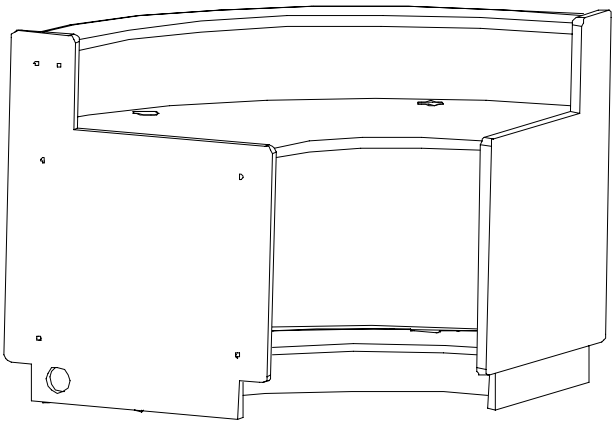

Constructed w/ Finished End

90 Degree Corner Patron Desk
Right Finished End *Left* Connector

The work surface of this unit is 29"H. The patron ledge is 7" deep. Two grommets are located at the rear approximately one quarter from each side. The right side of this unit provides a finished end with a matching flat black laminate toe kick.This unit also includes a wire chase in the base with a removable access cover for easy accessibility.

This unit can only connect to other units on the left panel.

Catalog #	Description	Over All Height "	Work Surface Ht"	Width"	Depth"	Price
CDO-2904	90° (Rt) Finish (L) Connect Patron Desk	39-3/4	29	48	48	

"Education's purpose is to replace an empty

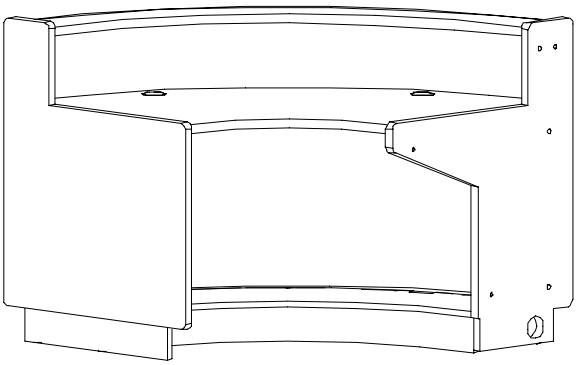

Constructed w/
Finished End

90 Degree Corner Patron Desk
Left Finished End *Right* Knee Space

This unit provides continuous knee space on the right side. The left side of this unit provides a finished end with a matching flat black laminate toe kick. The patron ledge is 7" deep. Two grommets are located at the rear approximately one quarter from each side. The work surface of this unit is 29"H. This unit also includes a wire chase in the base with a removable access cover for easy accessibility.

This unit can only connect to other units on the right panel and can only receive knee space end panels.

Catalog #	Description	Over All Height "	Work Surface Ht"	Width"	Depth"	Price
CDO-2902	90° Right Knee Patron Desk	39-3/4	29	48	48	

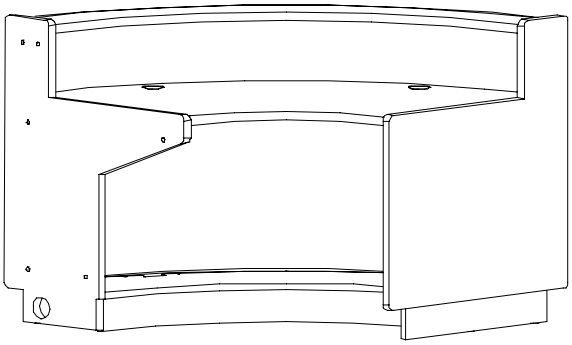

Constructed w/
Finished End

90 Degree Corner Patron Desk
Left Knee Space *Right* Finished End

This unit provides continuous knee space on theleft side. The work surface of this unit is 29"H. The right side of this unit provides a finished end with a matching flat black laminate toe kick. The patron ledge is 7" deep. Two grommets are located at the rear approximately one quarter from each side. This unit also includes a wire chase in the base with a removable access cover for easy accessibility.

This unit can only connect to other units on the left panel and can only receive knee space end panels.

Catalog #	Description	Over All Height "	Work Surface Ht"	Width"	Depth"	Price
CDO-2901	90° Left Knee Patron Desk	39-3/4	29	48	48	

mind with an open one." *Malcolm S. Forbes*

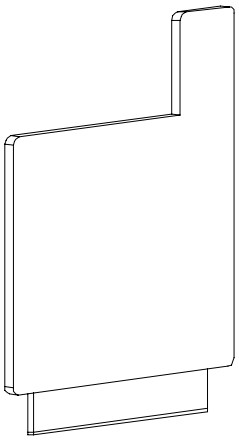

Patron Unit Finished End Panel

A finished end panel is needed to end a circulation desk with a square patron unit. The finished end panel is 1-1/4" thick and is banded with ½"T matching solid wood. The end panel also continues the flow of the 4"H flat black laminate toekick. The panel is bolted onto the terminating end. The left and right end of the desk is from the perspective of the staff side of the desk.

Catalog #	Description	Overall Height"	Thickness"	Width"	Price
CDO-2923	(L) Patron Desk Finished End Panel	39-1/4	1	30-1/2	
CDO-2922	(R) Patron Desk Finished End Panel	39-1/4	1	30-1/2	

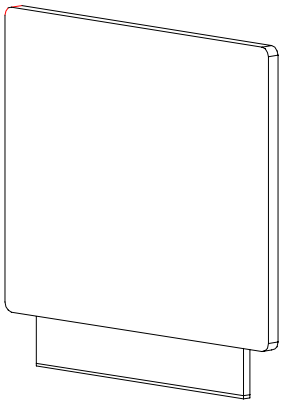

Finished End Panel

A finished end panel is needed to end a circulation desk with a non-patron unit. The finished end panel is 1-1/4" thick and is banded with ½"T matching solid wood. The end panel also continues the flow of the 4"H flat black laminate toekick. The panel is bolted onto the terminating end. The left and right end of the desk is from the perspective of the staff side of the desk.

Catalog #	Description	Overall Height"	Thickness"	Width"	Price
CDO-2919	Left Finished End Panel	29-1/4	1	30-1/2	
CDO-2920	Right Finished End Panel	29-1/4	1	30-1/2	

PROVIDENCE SERIES
GENERAL SPECIFICATIONS

All work surfaces will be constructed of 1-1/8" thick, 45-pound density particleboard-core with .050" thick high-pressure laminate and .020" thick backer sheet glued to opposite faces for a finished thickness of 1-1/4". (Note: Table tops can be constructed from 5 PLY lumber core or 11 PLY veneer core *(for an additional charge)*. Tops will be banded solid red oak with 3/4"T and profile determined by customer selection from edge band chart (EDGE DETAILS NOTED THROUGHOUT). The edge band will be of sufficient width to provide a 1/2" drop edge beneath the table core to hide mounting plates. Table edges will be finished to match table legs and/or end panels.

Computer table and carrel tops only will have grommets and J-wire managers to provide control and concealment of equipment wires.

Tops 60" long or more will have one 14-gauge, V-shaped steel keel that will be 5-1/2" shorter than the overall table length. **Tops longer than 72"** in length will receive a fifth leg at the center of the table with V-shaped keels along the length. **Tops wider than 48"** (and longer than 72") will receive two legs spaced evenly across the center.

Curbing and Index Table Shelving are constructed of 1" veneer-core red oak plywood secured to the table top by screws passing through the table top and into the shelving assembly. Exposed edges will have a 1/2"T solid red oak edge band. The banded edges of the uprights and shelves will receive an eased edge.

Study and Computer Carrels are "starter/adder" designed and have 3/4" veneer core plain-sliced plywood side and back panels. A 1/2"T solid red oak edge band is applied to exposed panel edges. Vertical panel edges are machined for Mod-Eze Clips (R) to receive shoulder fasteners mounted on leg posts and end panels.

Study Carrels only have an 8" D bookshelf mounted on the back panel above the work surface. 3/4" veneer core plywood, solid red oak edge band, fastened on three sides with solid wood cleats.

Computer Carrels only have a 12" D shelf mounted under the work surface made of 3/4" red oak veneer plywood, 1/4"T solid red oak edgeband, fastened on three sides with solid wood cleats.

Display Unit side panels are 1" (back panels 3/4") core veneer plain sliced red oak plywood. A 5/8 "x 5/8 " red oak retainer strip is fastened to the front sloped edge. Shelves and pullouts are 3/4" veneer red oak plywood with 1/4" red oak edgeband. Atlas stand shelves are provided with full extension ball bearing glides rated for 200 lbs.

All Providence Series legs will be 2-1/4" square, glued-up red oak with a 1/4" radius on all edges. Legs will have an 1-3/4" diameter threaded leveling glide which is mounted in countersunk and recessed T-nut. Legs will be attached to the table top by means of a 5" x 5" x 1/2" steel plate. A threaded steel barrel nut will be inserted on the inner corner of the leg approx. 2" from the top. A 5/16"-18 x 3" machine bolt will pass through the 1/2" steel plate down through the top of the leg and in to the barrel nut, firmly securing the two pieces together. A #10 x 1-1/4" flat head wood screw is then set into the plate and leg to prevent the two pieces from turning. This assembly is then attached to the table top with three 5/16"-18 x 1" hex-head machine bolts, screwed into three T-nut inserts which are in the top side of the table.

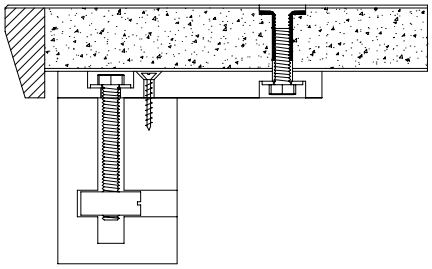

An OPTIONAL 3/4" x 1-1/2" red oak apron can be screw-attached around the underside of the top. The screw will be #8 x 2" and countersunk on underside of apron. ***All apron options will be priced prior to order placement and must be specified on the order.***

FINISH - See page 5 for finish specifications.

Visit our web site at ***www.russwood.net***

Round Table

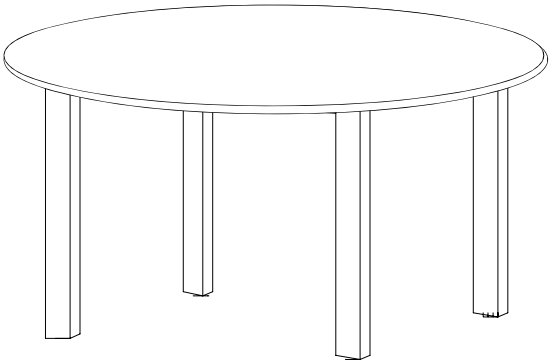

Catalog #	Description	Height"	Diameter"		Price
PS-25R36	25"H Round Table	25	36		
PS-25R42	25"H Round Table	25	42		
PS-25R48	25"H Round Table	25	48		
PS-25R60	25"H Round Table	25	60		
PS-27R36	27"H Round Table	27	36		
PS-27R42	27"H Round Table	27	42		
PS-27R48	27"H Round Table	27	48		
PS-27R60	27"H Round Table	27	60		
PS-29R36	29"H Round Table	29	36		
PS-29R42	29"H Round Table	29	42		
PS-29R48	29"H Round Table	29	48		
PS-29R60	29"H Round Table	29	60		

Square Table

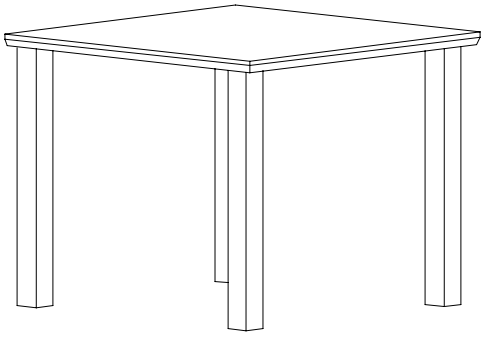

Catalog #	Description	Height"	Length"	Width"	Price
PS-25S36	25"H Square Table	25	36	36	
PS-25S42	25"H Square Table	25	42	42	
PS-25S48	25"H Square Table	25	48	48	
PS-27S36	27"H Square Table	27	36	36	
PS-27S42	27"H Square Table	27	42	42	
PS-27S48	27"H Square Table	27	48	48	
PS-29S36	29"H Square Table	29	36	36	
PS-29S42	29"H Square Table	29	42	42	
PS-29S48	29"H Square Table	29	48	48	

SEE PAGE 112 FOR EDGE DETAILS

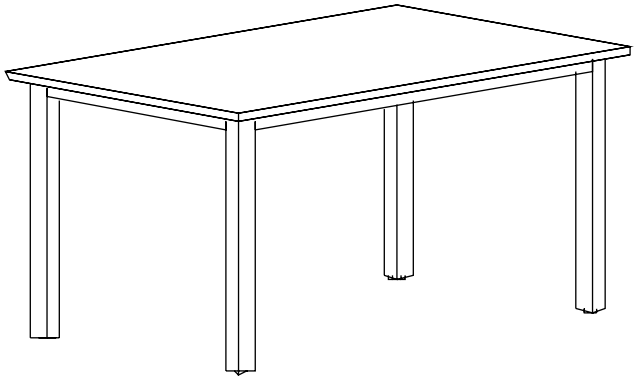

Four-Person Reading Table

Table shown with OPTIONAL apron

Catalog #	Description	Height"	Length"	Width"	Price
PS-254R01	25"H Four-Person Reading Table	25	60	36	
PS-254R02	25"H Four-Person Reading Table	25	72	36	
PS-254R04	25"H Four-Person Reading Table	25	72	42	
PS-254R03	25"H Four-Person Reading Table	25	72	48	
PS-274R01	27"H Four-Person Reading Table	27	60	36	
PS-274R02	27"H Four-Person Reading Table	27	72	36	
PS-274R04	27"H Four-Person Reading Table	27	72	42	
PS-274R03	27"H Four-Person Reading Table	27	72	48	
PS-294R01	29"H Four-Person Reading Table	29	60	36	
PS-294R02	29"H Four-Person Reading Table	29	72	36	
PS-294R04	29"H Four-Person Reading Table	29	72	42	
PS-294R03	29"H Four-Person Reading Table	29	72	48	

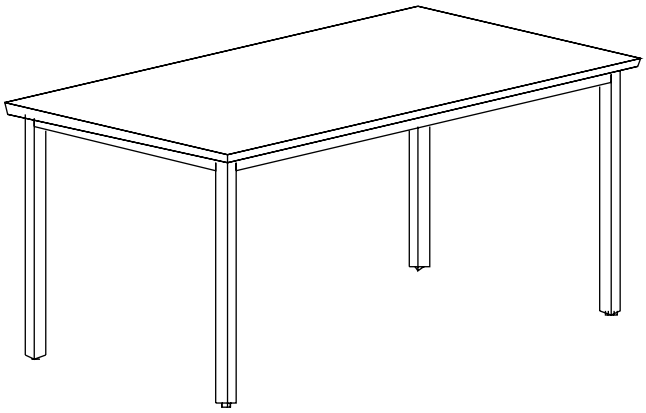

Six-Person Reading Table

Table shown with OPTIONAL apron

Catalog #	Description	Height"	Length"	Width"	Price
PS-256R01	25"H Six-Person Reading Table	25	90	36	
PS-256R03	25"H Six-Person Reading Table	25	90	42	
PS-256R02	25"H Six-Person Reading Table	25	90	48	
PS-276R01	27"H Six-Person Reading Table	27	90	36	
PS-276R03	27"H Six-Person Reading Table	27	90	42	
PS-276R02	27"Hsix-Person Reading Table	27	90	48	
PS-296R01	29"H Six-Person Reading Table	29	90	36	
PS-296R03	29"H Six-Person Reading Table	29	90	42	
PS-296R02	29"H Six-Person Reading Table	29	90	48	

SEE PAGE 112 FOR EDGE DETAILS

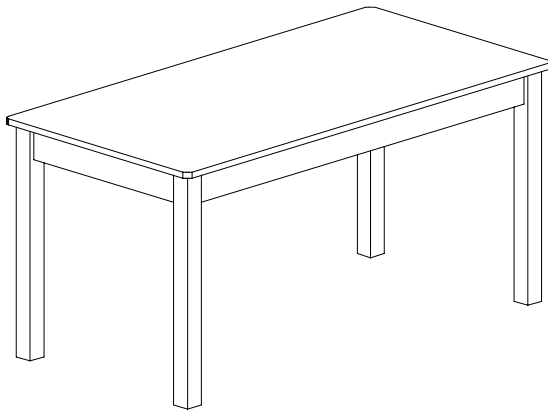

Activity Table

Table top will be 3/4”T 45-pound density particleboard-core with .050" thick high-pressure laminate and .020" thick backer sheet glued to opposite faces. Top edges will be banded with 3/4”T solid red oak with a shallowbull nose drop detail. Aprons will be 3/4”T x 3-1/2”W solid red oak. Apron frame will be fastened together with (4) 35 gauge formed steel apron brackets via (6) wood screws. Aprons will fasten to the top using 1/4” bolts and threaded T-nuts placed in the top surface under the laminate. Legs will be 2-1/4" square, glued-up solid hard-wood with a 1/8" radius on all edges. Legs will double bolt to the apron via the apron brackets.

Catalog #	Description	Height"	Length"	Width"	Price
PS-25A01	25"H Activity Table	25	30	30	
PS-25A02	25"H Activity Table	25	42	30	
PS-25A03	25"H Activity Table	25	48	30	
PS-25A04	25"H Activity Table	25	60	30	
PS-25A05	25"H Activity Table	25	72	30	
PS-25A06	25"H Activity Table	25	90	30	
PS-27A01	27"H Activity Table	27	30	30	
PS-27A02	27"H Activity Table	27	42	30	
PS-27A03	27"H Activity Table	27	48	30	
PS-27A04	27"H Activity Table	27	60	30	
PS-27A05	27"H Activity Table	27	72	30	
PS-27A06	27"H Activity Table	27	90	30	
PS-29A01	27"H Activity Table	29	30	30	
PS-29A02	27"H Activity Table	29	42	30	
PS-29A03	27"H Activity Table	29	48	30	
PS-29A04	27"H Activity Table	29	60	30	
PS-29A05	27"H Activity Table	29	72	30	
PS-29A06	27"H Activity Table	29	90	30	

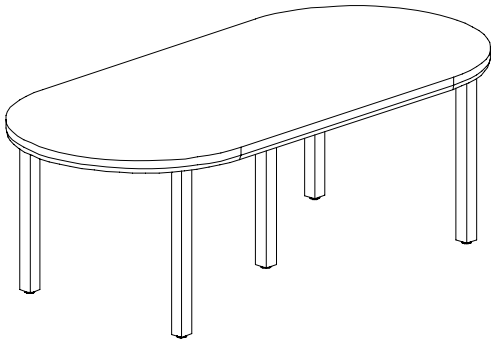

Race Track Table

Catalog #	Description	Height"	Length"	Width"	Price
PS-904227RT	27"H Race Track Table	27	90	42	
PS-904827RT	27"H Race Track Table	27	90	48	
PS-904229RT	29"H Race Track Table	29	90	42	
PS-904829RT	29"H Race Track Table	29	90	48	

SEE PAGE 112 FOR EDGE DETAILS

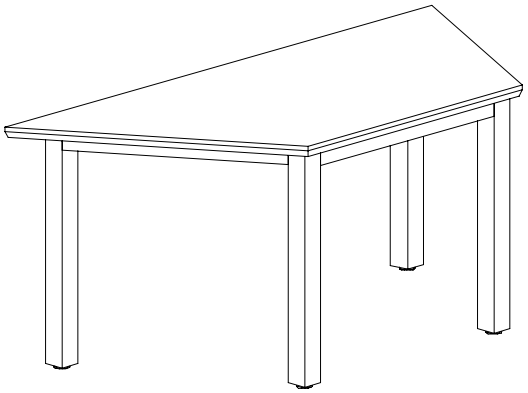

Trapezoid Table

Table shown with OPTIONAL apron

For this configuration order two (2) tables
(60”W x 50-1/2”D overall dimensions)

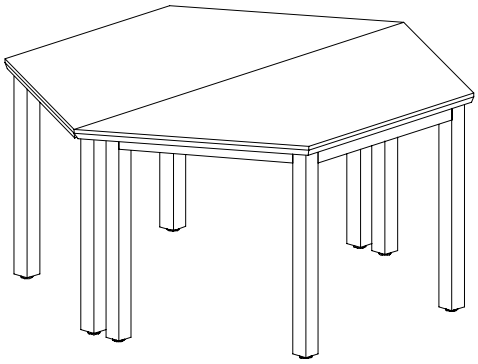

For this configuration order six (6) tables
(120”W x 104”D overall dimensions)

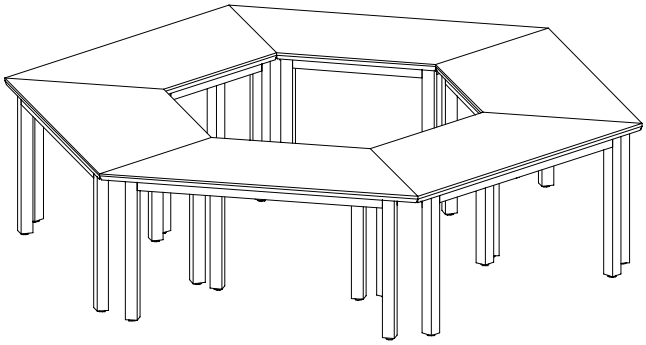

Catalog #	Description	Height"	Length"	Width"	Price
PS-306027TZ	27"H Trapezoidal Round Table	27	60	25	
PS-306029TZ	29"H Trapezoidal Round Table	29	60	25	
PS-306032TZ	32"H Trapezoidal Round Table	32	60	25	

"The aim of education should be to teach us rather how to think, than what to think - rather to improve our minds, so as to enable us to think for ourselves, than to load the memory with thoughts of other men."
Bill Beattie

SEE PAGE 112 FOR EDGE DETAILS

Planning For & Ordering Edgeband for Providence Series Activity & Reading Tables

Edge Detail for Providence Series *Activity Table*

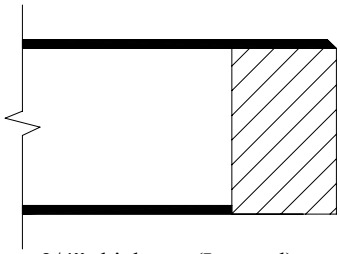

3/4" thick top (Internal)
Montana Drop

Edge Details for Providence Series Reading Tables Race Track Table Trapezoid Table

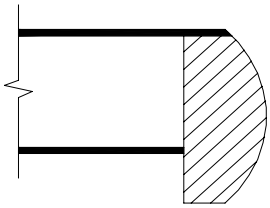

1 1/4" thick top (Internal)
Shallow Bullnose Drop

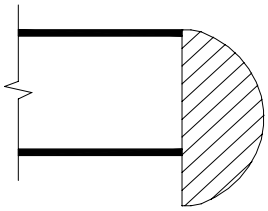

1 1/4" thick top (External)
Bullnose Drop

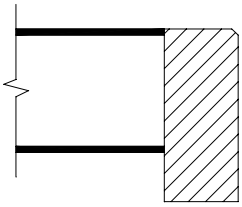

1 1/4" thick top (External)
Montana Drop

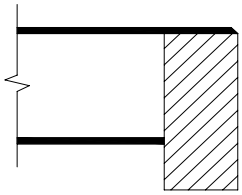

1 1/4" thick top (Internal)
Montana Drop

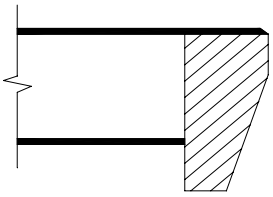

1 1/4" thick top (Internal)
Premier Drop

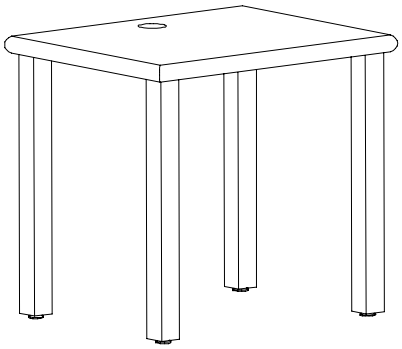

30”L x 24”W Flat Screen Computer Table

A grommet and J-channel wire management are provided in each unit to ensure concealment.

Catalog #	Description	Height"	Length"	Width"	Price
PS-302425	Sitting-Height Unit, child	25	30	24	
PS-302427	Intermediate -Height Unit	27	30	24	
PS-302429	Sitting-Height Unit, adult	29	30	24	
PS-302439	Standing-Height Unit	39	30	24	

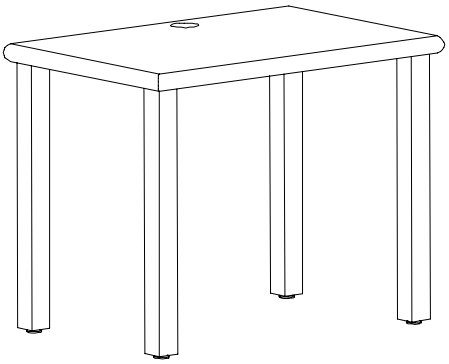

36”L x 24”W Flat Screen Computer Table

A grommet and J-channel wire management are provided in each unit to ensure concealment.

Catalog #	Description	Height"	Length"	Width"	Price
PS-362425	Sitting-Height Unit, child	25	36	24	
PS-362427	Intermediate -Height Unit	27	36	24	
PS-362429	Sitting-Height Unit, adult	29	36	24	
PS-362439	Standing-Height Unit	39	36	24	

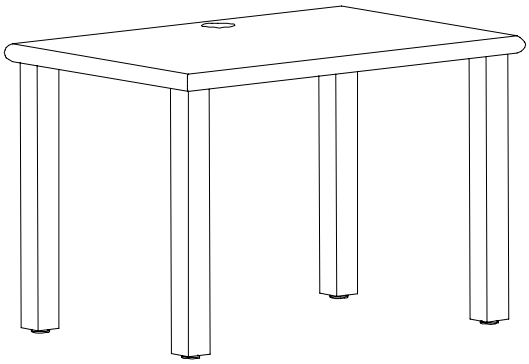

42”L x 24”W Flat Screen Computer Table

A grommet and J-channel wire management are provided in each unit to ensure concealment.

Catalog #	Description	Height"	Length"	Width"	Price
PS-422425	Sitting-Height Unit,child	25	42	24	
PS-422427	Intermediate-Height Unit	27	42	24	
PS-422429	Sitting-Height Unit,adult	29	42	24	
PS-422439	Standing-Height Unit	39	42	24	

SEE PAGE 122 FOR EDGE DETAILS

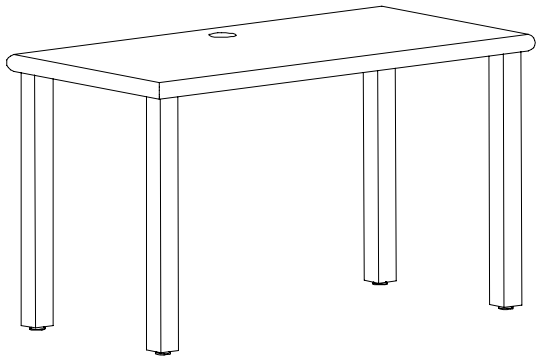

48”L x 24”W Flat Screen Computer Table

A grommets and wire manager are provided in each unit to ensure concealment.

Use these #’s to order 42”L units.

PS-422425
PS-422427
PS-422429
PS-422439

Catalog #	Description	Height"	Length"	Width"	Price
PS-482425	Sitting-Height Unit,child	25	48	24	
PS-482427	Intermediate-Height Unit	27	48	24	
PS-482429	Sitting-Height Unit,adult	29	48	24	
PS-482439	Standing-Height Unit	39	48	24	

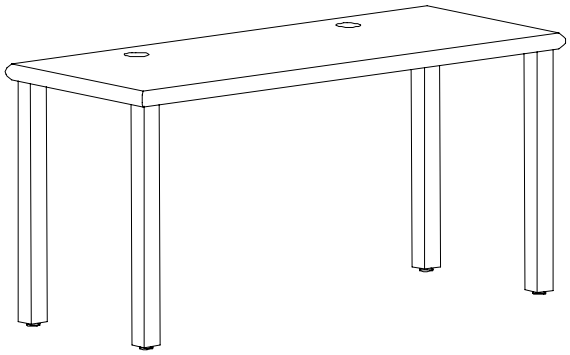

60”L x 24”W Flat Screen Computer Table

Two grommets and wire manager are provided in each unit to ensure concealment. Steel “V” keel provided on this unit.

Catalog #	Description	Height"	Length"	Width"	Price
PS-602425	Sitting-Height Unit, child	25	60	24	
PS-602427	Intermediate Height Unit	27	60	24	
PS-602429	Sitting-Height Unit, adult	29	60	24	
PS-602439	Standing-Height Unit	39	60	24	

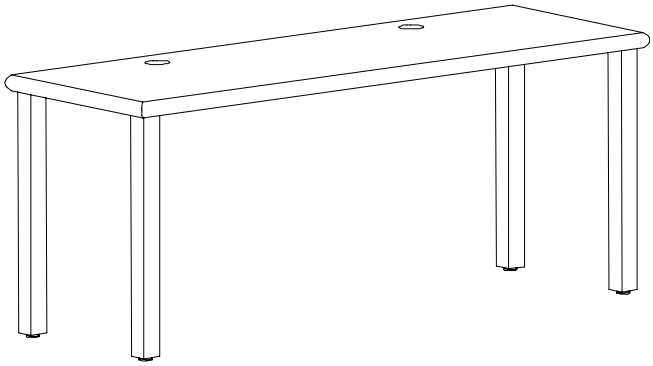

72”L x 24”W Flat Screen Computer Table

Two grommets and wire manager are provided in each unit to ensure concealment. Steel “V” keel provided on this unit.

See top of next page for 90”L x 24”W Flat Screen Computer Table

Catalog #	Description	Height"	Length"	Width"	Price
PS-722425	Sitting-Height Unit, child	25	72	24	
PS-722427	Intermediate Height Unit	27	72	24	
PS-722429	Sitting-Height Unit, adult	29	72	24	
PS-722439	Standing-Height Unit	39	72	24	

SEE PAGE 122 FOR EDGE DETAILS

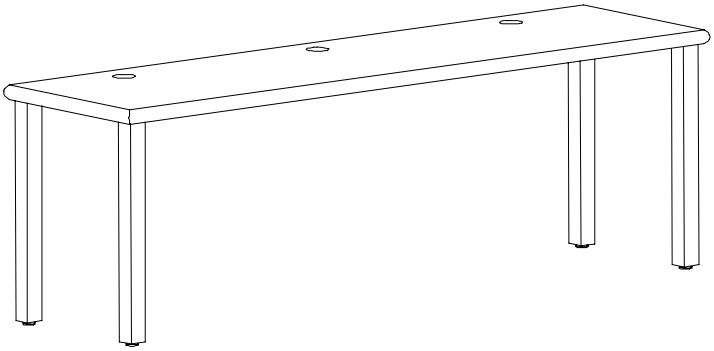

90”L x 24”W Flat Screen Computer Table

Three grommets and J-channel wire management are provided in each unit to ensure concealment. Two steel “V” keels provided on this unit.

Catalog #	Description	Height"	Length"	Width"	Price
PS-902425	Sitting-Height Unit, child	25	90	24	
PS-902427	Intermediate Height Unit	27	90	24	
PS-902429	Sitting-Height Unit, adult	29	90	24	
PS-902439	Standing-Height Unit	39	90	24	

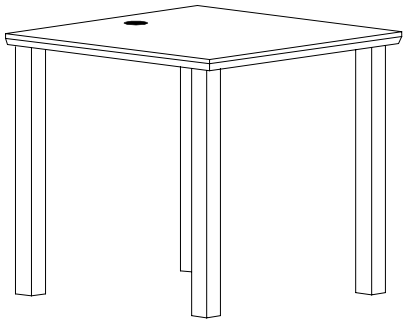

30” Square Computer Table

A grommet and wire manager are provided in each unit to ensure concealment.

Catalog #	Description	Height"	Length"	Width"	Price
PS-303025	Sitting-Height Unit, child	25	30	30	
PS-303027	Intermediate-Height Unit	27	30	30	
PS-303029	Sitting-Height Unit, adult	29	30	30	
PS-303039	Standing-Height Unit	39	30	30	

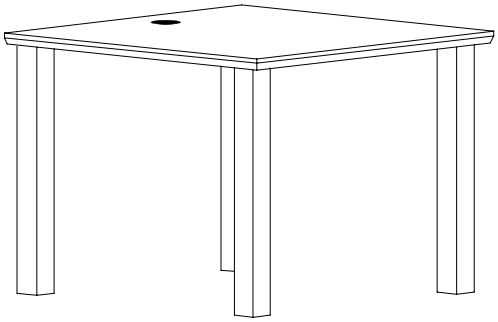

36”L x 30”W Computer Table

A grommet and wire manager are provided in each unit to ensure concealment.

Catalog #	Description	Height"	Length"	Width"	Price
PS-363025	Sitting-Height Unit, child	25	36	30	
PS-363027	Intermediate -Height Unit	27	36	30	
PS-363029	Sitting-Height Unit, adult	29	36	30	
PS-363039	Standing-Height Unit	39	36	30	

SEE PAGE 122 FOR EDGE DETAILS

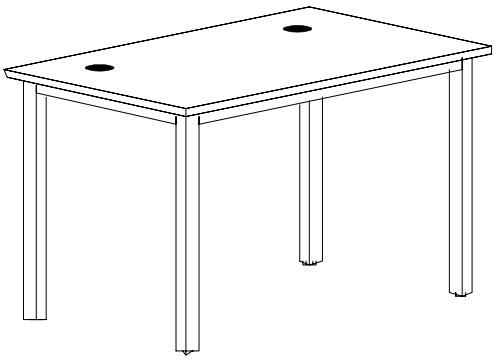

48”L x 30”W Computer Table

Two grommets and wire manager are provided in each unit to ensure concealment. Table shown with OPTIONAL apron

Catalog #	Description	Height"	Length"	Width"	Price
PS-483025	Sitting-Height Unit,child	25	48	30	
PS-483027	Intermediate-Height Unit	27	48	30	
PS-483029	Sitting-Height Unit,adult	29	48	30	
PS-483039	Standing-Height Unit	39	48	30	

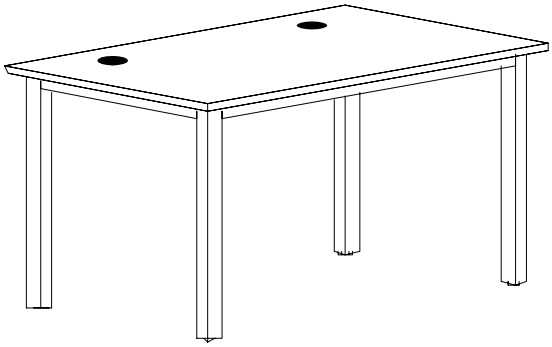

60”L x 30”W Computer Table

Two grommets and wire manager are provided in each unit to ensure concealment. Table shown with OPTIONAL apron

Catalog #	Description	Height"	Length"	Width"	Price
PS-603025	Sitting-Height Unit, child	25	60	30	
PS-603027	Intermediate Height Unit	27	60	30	
PS-603029	Sitting-Height Unit, adult	29	60	30	
PS-603039	Standing-Height Unit	39	60	30	

“A university professor set an examination question in which he asked, ‘what is the difference between ignorance and apathy?’ The professor had to give an A+ to a student who answered: ‘I don’t know and I don’t care.’”

Richard Pratt, Pacific Computer Weekly, 20 July 1990

SEE PAGE 122 FOR EDGE DETAILS

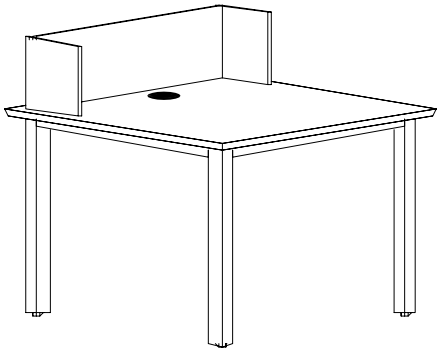

36” Square Computer Table w/curbing

10"H curbing will run the entire width inside the edgeband, as well as 10" along each side to aid with wire connection concealment to provide a computer work station. A grommet and wire manager are provided in each unit to ensure concealment. Table shown with OPTIONAL apron

Catalog #	Description	Height"	Length"	Width"	Price
PS-363625	Single-Station Unit, elementary sitting height	25	36	36	
PS-363627	Single-Station Unit, intermediate height	27	36	36	
PS-363629	Single-Station Unit, adult sitting height	29	36	36	
PS-363639	Single-Station Unit, standing height	39	36	36	

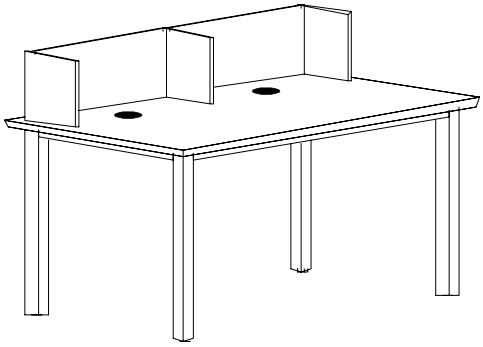

60”L x 36W” Computer Table w/curbing

10"H curbing will run the entire width inside the edgeband, as well as 10" along each side to aid with wire connection concealment to provide two computer work stations. Two grommets and wire manager are provided in each unit to ensure concealment.

Catalog #	Description	Height"	Length"	Width"	Price
PS-603625	Sitting-Height Unit, elementary	25	60	36	
PS-603627	Intermediate-Height Unit	27	60	36	
PS-603629	Sitting-Height Unit, adult	29	60	36	
PS-603639	Standing-Height Unit	39	60	36	

“Genius without education is like silver in the mine.”

Ben Franklin

SEE PAGE 122 FOR EDGE DETAILS

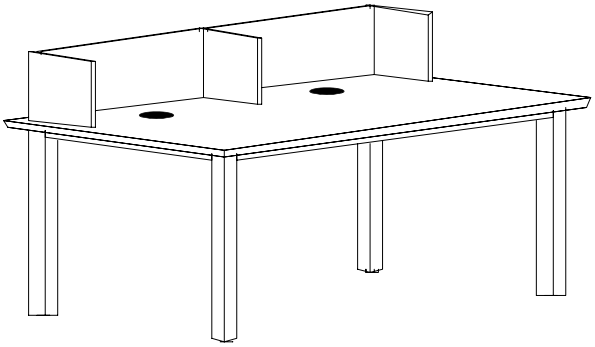

72”L x 36W” Computer Table w/curbing

10"H curbing will run the entire width inside the edgeband, as well as 10" along each side to aid with wire connection concealment to provide two computer work stations. Two grommets and wire manager are provided in each unit to ensure concealment.

Catalog #	Description	Height"	Length"	Width"	Price
PS-723625	Double-Station Unit, elementary sitting height	25	72	36	
PS-723627	Double-Station Unit, intermediate height	27	72	36	
PS-723629	Double-Station Unit, adult sitting height	29	72	36	
PS-723639	Double-Station Unit, standing height	39	72	36	

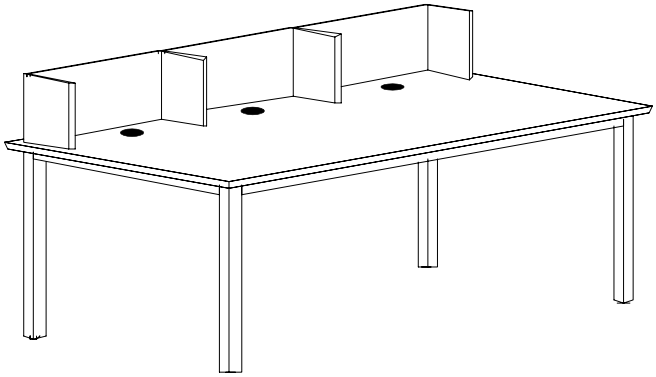

90”L x 36”W Computer Table w/curbing

10"H curbing will run the entire width inside the edgeband, as well as 10" along each side to aid with wire connection concealment to provide three computer work stations.. Three grommets and wire manager are provided in each unit to ensure concealment.

Catalog #	Description	Height"	Length"	Width"	Price
PS-903625	Triple-Station Unit, elementary sitting height	25	90	36	
PS-903627	Triple-Station Unit, intermediate height	27	90	36	
PS-903629	Triple-Station Unit, adult sitting height	29	90	36	
PS-903639	Triple-Station Unit, standing height	39	90	36	

“I am still learning.”
Michelangelo

SEE PAGE 122 FOR EDGE DETAILS

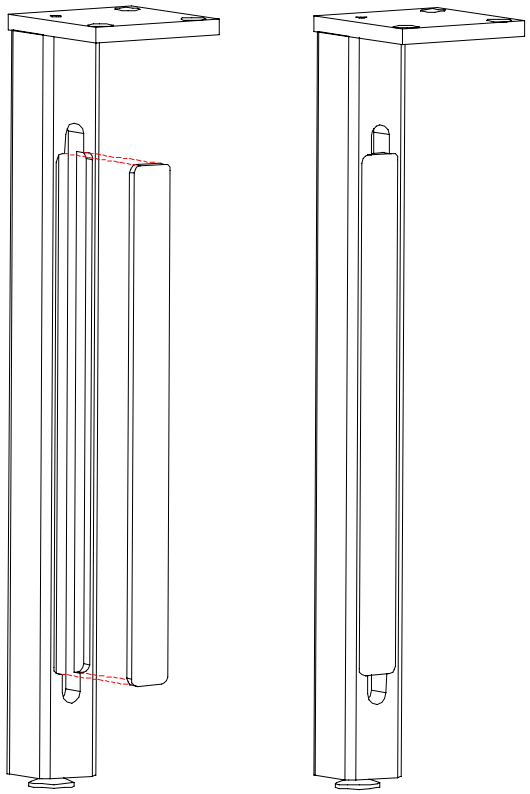

Wire Access Leg

The wire access leg ultilizes the standard solid red oak table leg and steel plate assembly (see pg. 107). An internal wire chase is machined into the leg which is designed to conceal wiring. Wiring enters the wire chase at the top of the chase and exits the bottom of the chase. A solid red oak wire chase cover (finished to match) conceals the wiring. Velcro strips are glued and machine fastened to both the leg inside the chase and the solid red oak wire chase cover. The inside dimensions of the wire chase is 1/2”D x 3/4”W. The oak wire chase cover is 3/8”T and fits flush with the leg when in place.

Also see Accessories section (pg. 205) for other helpful computer table accessories.

Catalog #	Description	Height"	Width"	Depth	Price
A-4725	Wire Access Leg for 25"H Table	25	2-14"	2-1/4"	
A-4727	Wire Access Leg for 27"H Table	27	2-14"	2-1/4"	
A-4729	Wire Access Leg for 29"H Table	29	2-14"	2-1/4"	
A-4739	Wire Access Leg for 39"H Table	39	2-14"	2-1/4"	

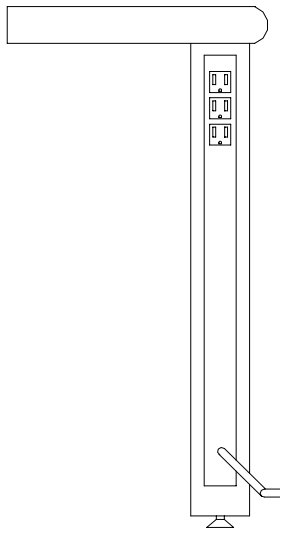

Three Outlet Power Leg

Optional power leg is made of solid matching hardwood with a flush-mounted, UL-approved power strip. Power strip has three outlets and is supplied with a six-foot cord.

Catalog #	Description	Height"	Width"	Depth	Price
A-925	Power Leg for 25"H Table	25	2-14"	2-1/4"	
A-927	Power Leg for 27"H Table	27	2-14"	2-1/4"	
A-929	Power Leg for 29"H Table	29	2-14"	2-1/4"	
A-939	Power Leg for 39"H Table	39	2-14"	2-1/4"	

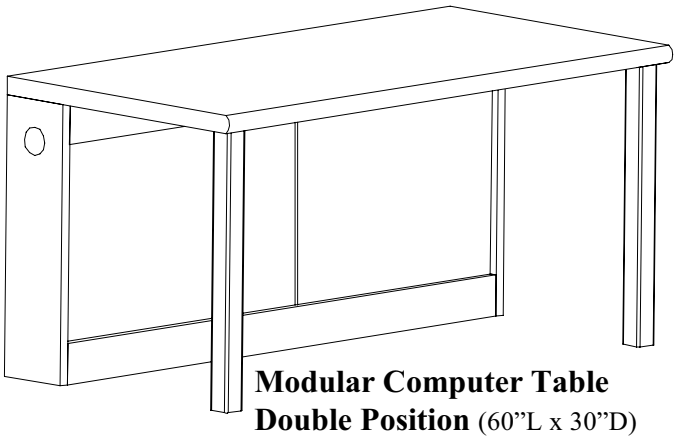

Modular Computer Table
Double Position (60”L x 30”D)

Modular Computer Tables

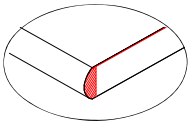

Table tops are banded with a 3/4”T solid red oak edge band. The front band is specifiable with standard edge details. The sides and back bands are internal flush . This allows for tables to be used in a series providing the utility of a continuous top. Tables in a series can be bolted (via the wire chase) and unbolted in order to re-configure a new series or add more tables.

The wire chase is accessible through the front via 1/4”T red oak veneer plywood sliding doors and through the work surface via grommets. The bottom of the chase provides large access holes for floor mounted power and data jacks. Power and data connectivity between tables is accomplished with 3” grommets in each end of the wire chase on floor units. The wire chase is provided with a fully enclosed 3/4”T finished red oak veneer plywood back. On wall units, the wire chase has a partially open back to all for accessto wall jacks and outlets

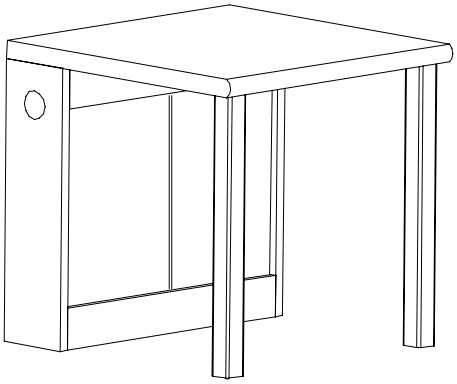

Modular Computer Table
Single Position (30”L x 30”D)

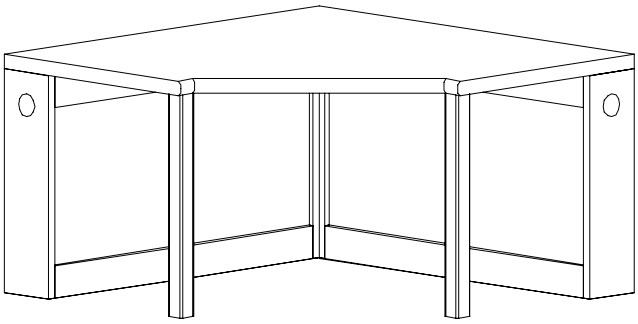

Modular Computer Corner Table (53” x 53”)
This unit does provide continuous wire access around the corner.

See page 158 if a computer counter is desired.

Catalog #	Description	Height"	Length"	Width"	Price
WALL UNITS HAVE OPEN BACKS					
PS-M603025W	60"X30" Mod Comp Tab w/chase - 25"H - WALL UNIT	25	60	30	
PS-M603027W	60"X30" Mod Comp Tab w/chase - 27"H - WALL UNIT	27	60	30	
PS-M603029W	60"X30" Mod Comp Tab w/chase - 29"H - WALL UNIT	29	60	30	
PS-M303025W	30"X30" Mod Comp Tab w/chase - 25"H - WALL UNIT	25	30	30	
PS-M303027W	30"X30" Mod Comp Tab w/chase - 27"H - WALL UNIT	27	30	30	
PS-M303029W	30"X30" Mod Comp Tab w/chase - 29"H - WALL UNIT	29	30	30	
PS-M535325W	53"X53" Mod Comp Corner w/chase - 25"H - WALL UNIT	25	53	53	
PS-M535327W	53"X53" Mod Comp Corner w/ chase - 27"H - WALL UNIT	27	53	53	
PS-M535329W	53"X53" Mod Comp Corner w/chase - 29"H - WALL UNIT	29	53	53	
FLOOR UNITS HAVE FINISHED BACKS					
PS-M603025F	60"X30" Mod Comp Tab w/chase - 25"H - FLOOR UNIT	25	60	30	
PS-M603027F	60"X30" Mod Comp Tab w/chase - 27"H - FLOOR UNIT	27	60	30	
PS-M603029F	60"X30" Mod Comp Tab w/chase - 29"H - FLOOR UNIT	29	60	30	
PS-M303025F	30"X30" Mod Comp Tab w/chase - 25"H - FLOOR UNIT	25	30	30	
PS-M303027F	30"X30" Mod Comp Tab w/chase - 27"H - FLOOR UNIT	27	30	30	
PS-M303029F	30"X30" Mod Comp Tab w/chase - 29"H - FLOOR UNIT	29	30	30	
PS-M535325F	53"X53" Mod Comp Corner w/chase - 25"H - FLOOR UNIT	25	53	53	
PS-M535327F	53"X53" Mod Comp Corner w/chase - 27"H - FLOOR UNIT	27	53	53	
PS-M535329F	53"X53" Mod Comp Corner w/chase - 29"H - FLOOR UNIT	29	53	53	

SEE PAGE 122 FOR EDGE DETAILS

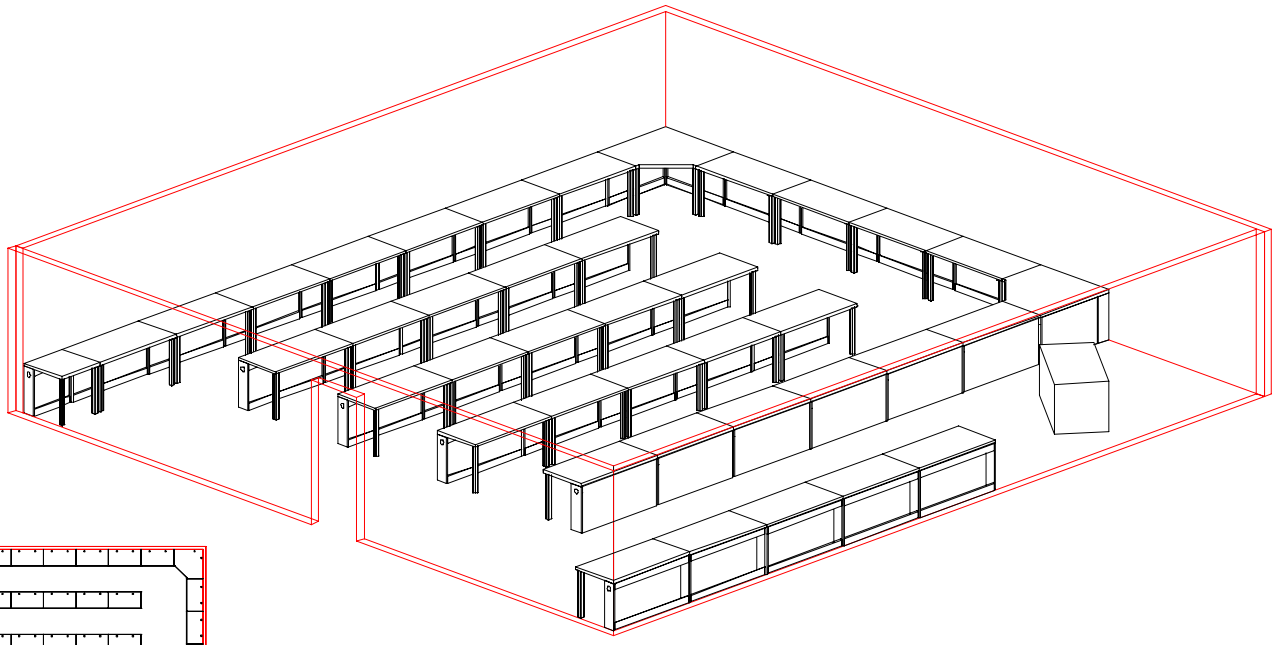

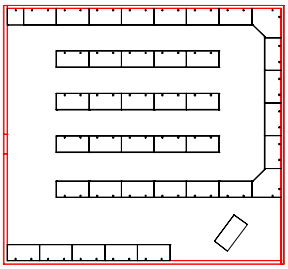

Modular computer tables provide the flexibility to furnish an entire computer lab...

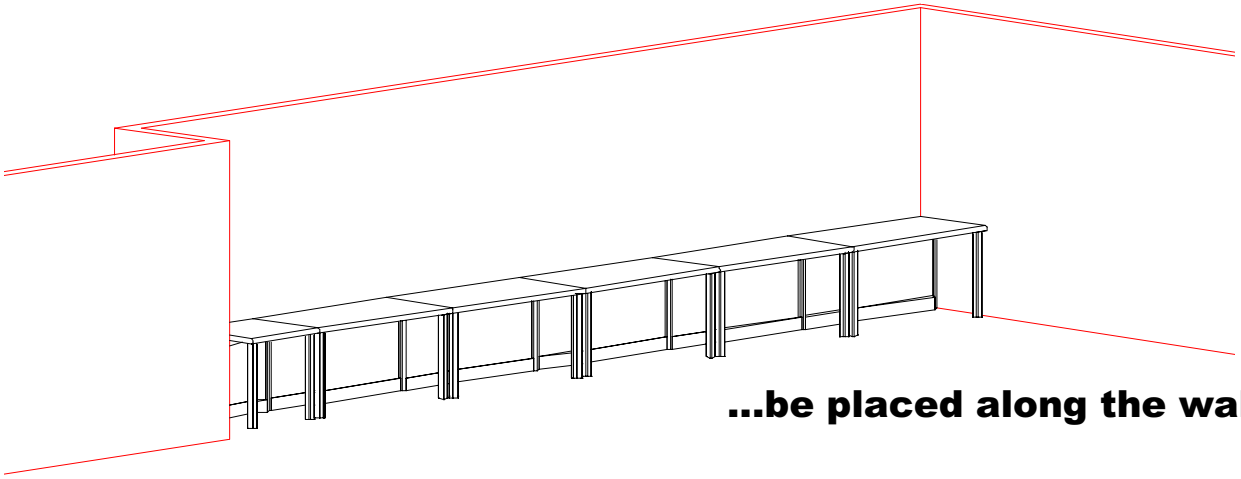

...be placed along the wall...

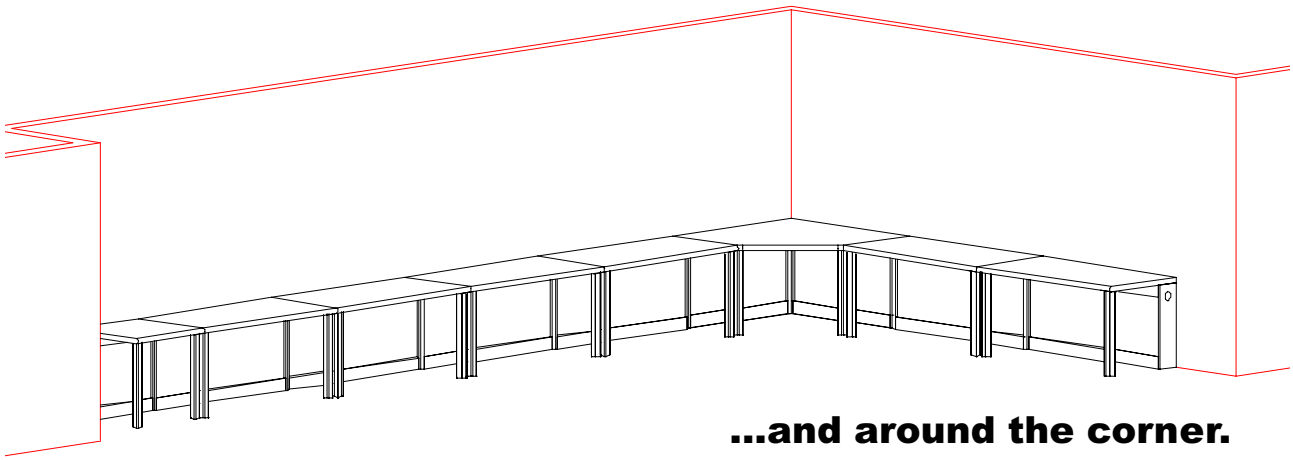

...and around the corner.

Planning For & Ordering Edgeband for Providence Series Computer Tables

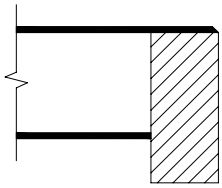

Modular Computer Table work surface will have a 3/4"T internal DROP solid red oak edgeband on *back and sides**.

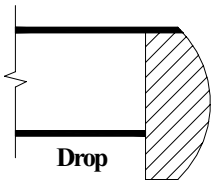

Computer Tables Work surfaces will be constructed with a 3/4"T solid red oak edgeband and can be ordered with any one of a variety of DROP edgeband details.

.

***Edge Details for *front edge* only of Modular Table**

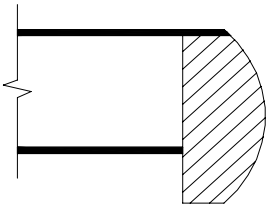

1 1/4" thick top (Internal)
Shallow Bullnose Drop

Edge Details for Providence Series Computer Tables

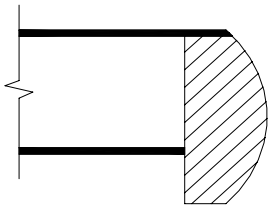

1 1/4" thick top (Internal)
Shallow Bullnose Drop

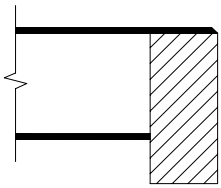

1 1/4" thick top (Internal)
Montana Drop

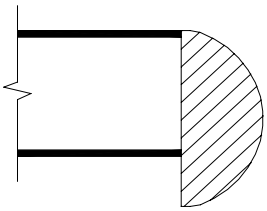

1 1/4" thick top (External)
Bullnose Drop

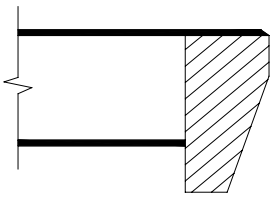

1 1/4" thick top (Internal)
Premier Drop

Study Carrels - Starter/Adder

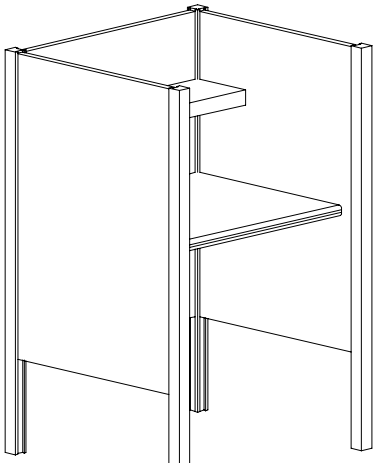

PS-48-S1

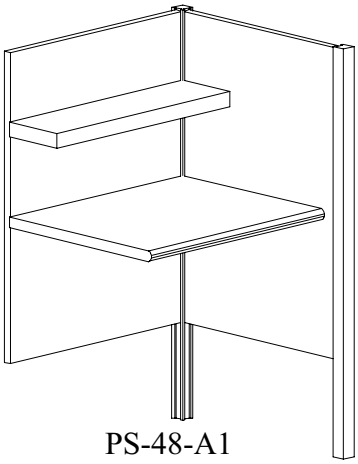

PS-48-A1

Single Study Carrel (Starter-Adder)

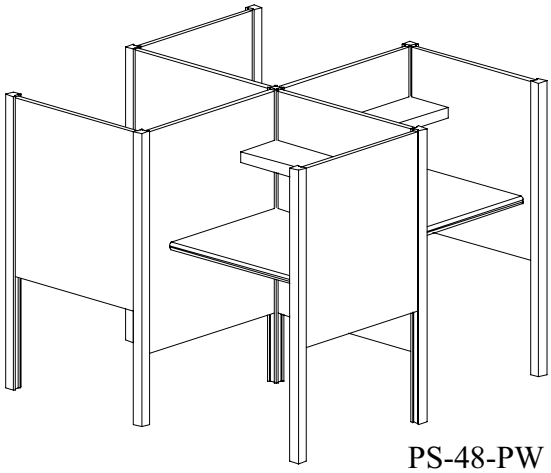

PS-48-PW

Pinwheel Study Carrel

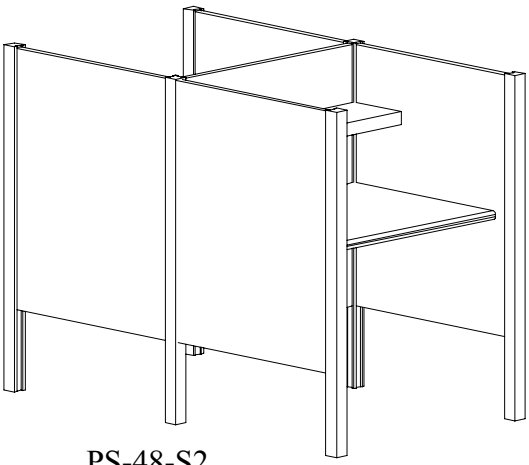

PS-48-S2

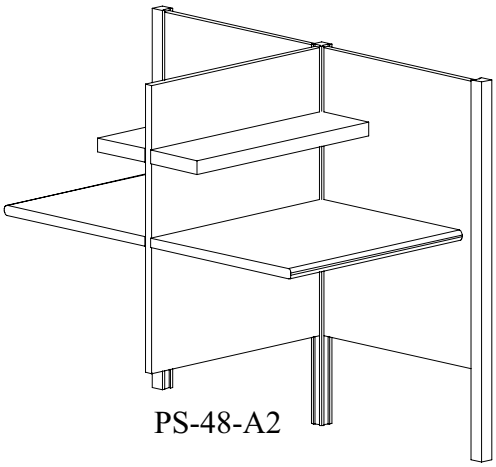

PS-48-A2

Double Study Carrel (Starter-Adder)

Computer Carrels Next Page

Study and Computer Carrels are “starter/adder” designed and have 3/4” veneer core plain-sliced plywood side and back panels. A 1/2”T solid red oak edge band is applied to exposed panel edges. Vertical panel edges are machined for Mod-Eze Clips (R) to receive shoulder fasteners mounted on leg posts and end panels. Leg posts are 1-3/4” square, dadoed to receive the side and back panels. Legs will have an 1-3/4" diameter threaded leveling glide which is mounted in countersunk and recessed T-nut. Work surface is attached to side panels via metal bolt cleats and 5/16” bolt. The bolt is received into the end panel via a 1/2” threaded insert, and is received into the top via a 7/8” flanged t-nut insert.

Study Carrels only have an 8”D bookshelf mounted on the back panel above the work surface. Shelf is 3/4” veneer core plywood. Front edge is banded with 3/4” x 1-3/4” solid red oak. Shelf is fastened on three sides with wood screws and metal cleats.

SEE PAGE 131 FOR EDGE DETAILS

Catalog #	Description	Height"	Width"	Depth"	Price
PS-48S1	Single-Faced,starter	48	39	29-1/4	
PS-48A1	Single-Faced, adder	48	37-1/2	29-1/4	
PS-48S2	Double-Faced, starter	48	39	56-3/4	
PS-48A2	Double-Faced, adder	48	37-1/2	56-3/4	
PS-48PW	Pinwheel Configuration	48	76-1/4	76-1/4	

Computer Carrels - Starter/Adder

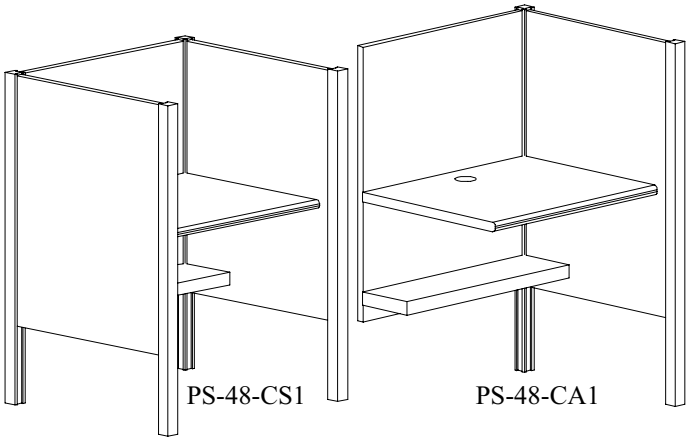

Single Computer Carrel (Starter-Adder)

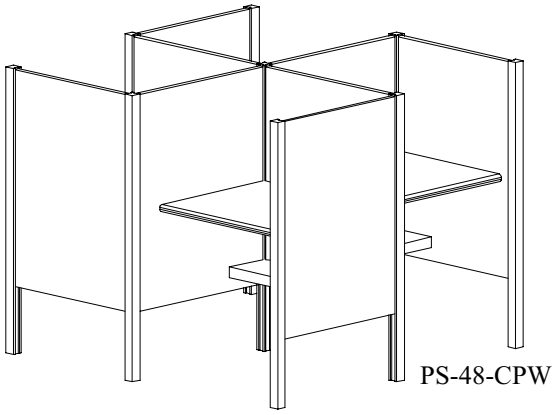

Pinwheel Computer Carrel

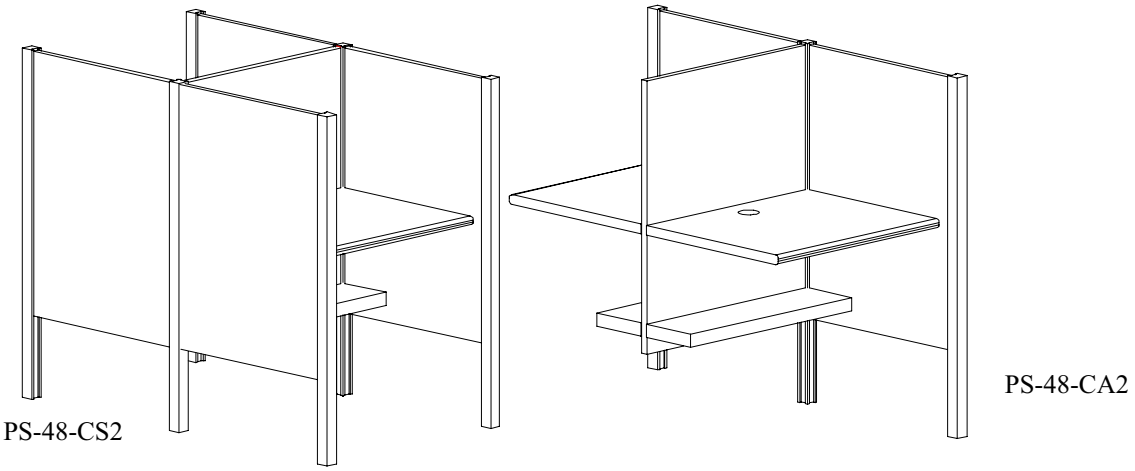

Double Computer Carrel (Starter-Adder)

Computer Carrels only have an 12”D shelf mounted under the work surface made of 3/4” veneer red oak plywood, 1/4”T solid red oak edgeband, fastened on three sides with solid wood cleats.

Catalog #	Description	Height"	Width"	Depth"	Price
PS-30CS1	Single-Faced, starter	48	33	33-1/2	
PS-30CA1	Single-Faced, adder	48	31-1/2	33-1/2	
PS-36CS1	Single-Faced, starter	48	39	33-1/2	
PS-36CA1	Single-Faced, adder	48	37-1/2	33-1/2	
PS-48CS1	Single-Faced, starter	48	50-1/2	33-1/2	
PS-48CA1	Single-Faced, adder	48	49	33-1/2	
PS-30CS2	Double-Faced, starter	48	33	64-1/4	
PS-30CA2	Double-faced, adder	48	31-1/2	64-1/4	
PS-36CS2	Double-Faced, starter	48	39	64-1/4	
PS-36CA2	Double-Faced, adder	48	37-1/2	64-1/4	
PS-48CS2	Double-Faced, starter	48	50-1/2	64-1/4	
PS-48CA2	Double-Faced, adder	48	49	64-1/4	
PS-30CPW	Pinwheel Configuration	48	64-1/4	64-1/4	
PS-36CPW	Pinwheel Configuration	48	76-1/4	76-1/4	
PS-48CPW	Pinwheel configuration	48	99-1/4"	99-1/4	

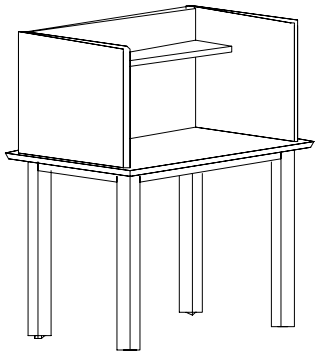

Single Table Carrel Full Sided

Carrel shelving will be 19"H with side returns extending the full length of the work surface depth. A 3/4"T 7-ply veneer-core red oak shelf will be positioned 13" above the work surface. Shelf will be 7"D and front edge of shelf will have a 3/4" x 1-3/4" solid red oak drop edgeband.

Catalog #	Description	Height"	Width"	Depth"	Price
PS-1FR25	Table Carrel, single-faced (25"H worksurface)	44	36	24	
PS-1FR27	Table Carrel, single-faced (27"H worksurface)	46	36	24	
PS-1FR29	Table Carrel, single-faced (29"H worksurface)	48	36	24	

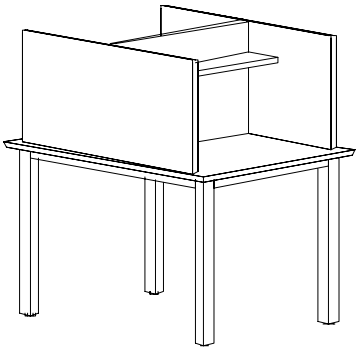

Double Table Carrel Full Sided

Carrel shelving will be 19"H with side returns extending the full length of the work surface depth. A 3/4"T 7-ply veneer-core red oak shelf will be positioned 13" above the work surface. Shelf will be 7"D and front edge of shelf will have a 3/4" x 1-3/4" solid red oak drop edgeband.

Catalog #	Description	Height"	Width"	Depth"	Price
PS-2FR25	Table Carrel, double-faced (25"H worksurface)	44	36	48	
PS-2FR27	Table Carrel, double-faced (27"H worksurface)	46	36	48	
PS-2FR29	Table Carrel, double-faced (29"H worksurface)	48	36	48	

"I have never let my schooling interfere with my education."

Mark Twain

SEE PAGE 131 FOR EDGE DETAILS

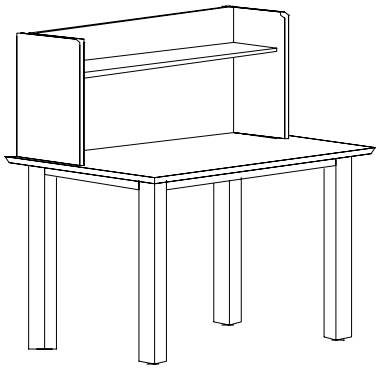

Single Table Carrel *Short-Sided*

Carrel shelving will be 19"H with side returns extending 8" along the sides of the work surface. A 3/4"T 7-ply veneer-core red oak shelf will be positioned 13" above the work surface. Shelf will be 7"D and will have a 3/4" x 1-3/4" solid red oak drop edge band.

Catalog #	Description	Height"	Length	Width"	Price
PS-1SR25	Table Carrel, single-faced (25"H worksurface)	44	36	24	
PS-1SR27	Table Carrel, double-faced (27"H worksurface)	46	36	24	
PS-1SR29	Table Carrel, single-faced (29"H worksurface)	48	36	24	

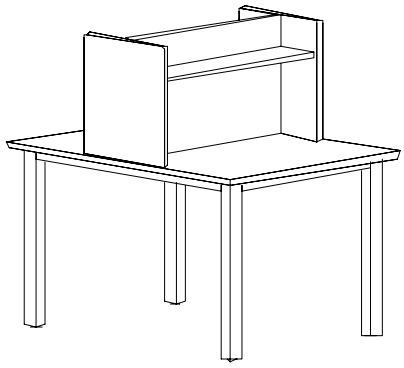

Double Table Carrel *Short-Sided*

Carrel shelving will be 19"H with side returns extending 16" along the sides of the work surface. Two 3/4"T 7-ply veneer-core red oak shelves will be positioned 13" above the work surface. Each shelf will be 7"D and will have a 3/4" x 1-3/4" solid red oak drop edgeband.

Catalog #	Description	Height"	Width"	Depth"	Price
PS-2SR25	Table Carrel, double-faced (25"H worksurface)	44	36	48	
PS-2SR27	Table Carrel, double-faced (27"H worksurface)	46	36	48	
PS-2SR29	Table Carrel, double-faced (29"H worksurface)	48	36	48	

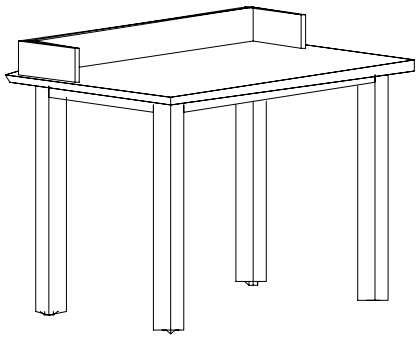

Table Carrel

A 4"H x 1"T solid red oak book rail will be mounted on the work surface across the entire width at the back. Side returns will be the same height, fastened at right angles, and will extend 8" along the sides of the work surface. Book rails will be fastened by screws from the underside.

Catalog #	Description	Height"	Width"	Depth"	Price
PS-2FR25	Table Carrel, (25"H worksurface)	29	48	36	
PS-2FR27	Table Carrel, (27"H worksurface)	31	48	36	
PS-2FR29	Table Carrel, (29"H worksurface)	33	48	36	

SEE PAGE 131 FOR EDGE DETAILS

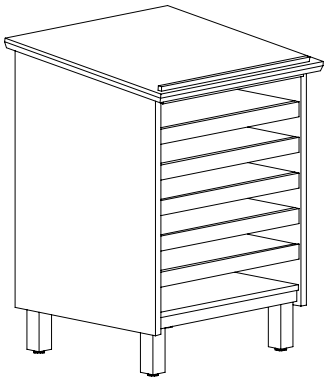

Atlas Stand

Each Atlas Stand Unit will have pullout, full-extension shelves on ball bearing glides. Shelves will be 25-3/4"W x 23-7/8"D and will have stops to prevent accidental removal. Adult unit will have 5 shelves with 3" between shelves. Children's unit will have 4 shelves with 2-1/2" between shelves. Shelves and pullouts are 3/4" veneer red oak plywood with 1/4" red oak edgeband. Atlas stand shelves are provided with full extension ball bearing glides rated for 200 lbs. A 5/8"x5/8" red oak retainer strip is fastened to the front sloped edge.

Catalog #	Description	Height"	Width"	Depth"	Price
PS-36AT	Elementary height	35	29-3/8	27-1/16	
PS-42AT	Adult height	42	29-3/8	27-1/16	

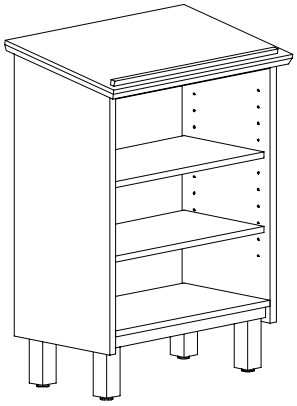

Dictionary Stand

Each Dictionary Stand Unit will have 2 adjustable shelves on 2" centers and 1 fixed base shelf. A 5/8" x 5/8" red oak retainer strip is fastened to the front sloped edge.

Catalog #	Description	Height"	Width"	Depth"	Price
PS-36DS	Elementary height	35	29-3/8	18	
PS-43DS	Adult height	43	29-3/8	18	

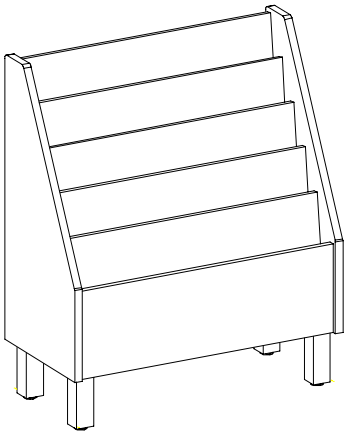

Magazine Rack

Each Magazine Rack Unit will have 6 sloping display pockets formed by 3/4" thick, edgebanded veneer plywood dividers. Each display pocket will have a closed bottom. The back side will have a shelf and will be finished to allow for storage of back issues.

Catalog #	Description	Height"	Width"	Depth"	Price
PS-43MR	Vertical Magazine Rack	42	35-1/8	17	

SEE PAGE 131 FOR EDGE DETAILS

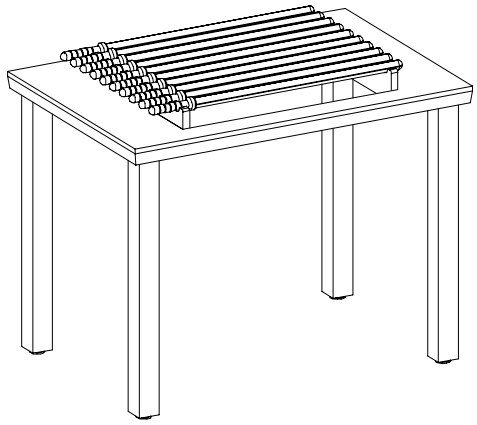

Horizontal Newspaper Rack

Each Horizontal Newspaper Rack will have an open-top frame bordered by a holder on each side. Each holder will have 10 U-shaped grooves, each designed to accept a newspaper rod. Newspaper rods are included.

Catalog #	Description	Height"	Length	Width"	Price
PS-31HR	Universal height	31	36	26	

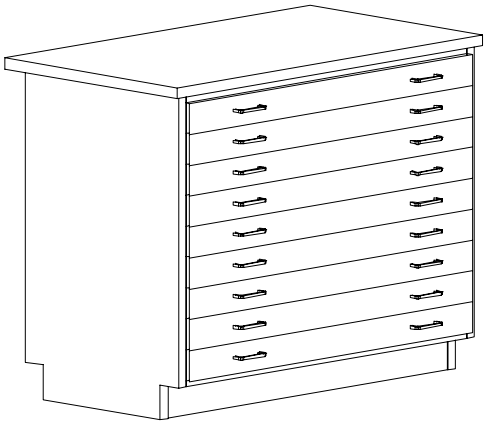

Map Case Unit

Each unit is a stand-alone piece. Units will have 9 stacked drawers. Each drawer will be mounted on 18" full-extension, ball bearing glides with a load rating of 100 lbs. per pair.

Catalog #	Description	Height"	Width"	Depth"	Price
MC-42	Map Case	42	49	29	

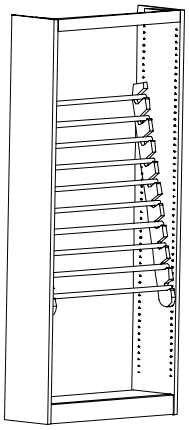

Newspaper File <u>Insert</u> will fit into 10" or 12" deep single-faced shelving, 82", 72" or 60" high. File insert will be made of two hardwood cleats, 1-1/4" thick with 1" notched slots for rods. Cleats will be attached to uprights with wood screws.

Insert only is included in pricing.

Catalog #	Description	Insert Height	Rod Length	Cleat Thickness	Price
INS-8260	Newspaper File Insert for 82"H Shelf (Holds 10 rods)	45-1/2"	34-7/16	1-1/4"	
INS-6042	Newspaper File Insert for 72"H Shelf (Holds 8 rods)	37"	34-7/16	1-1/4"	
INS-4236	Newspaper File Insert for 60"H Shelf (Holds 6 rods)	29-1/8"	34-7/16	1-1/4"	

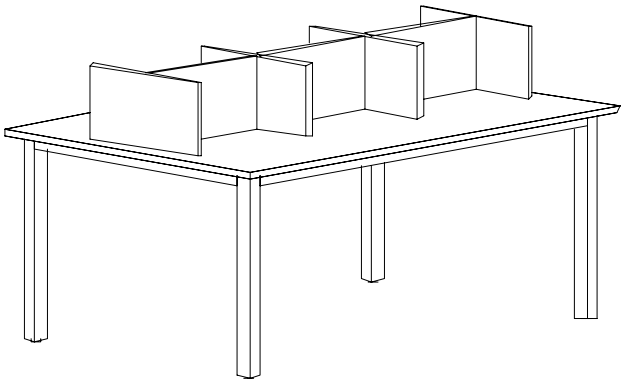

72” Index Table (Single or Double Tier)

The single tier shelving superstructure will be 10" high and will have 6 compartments which are 20-3/16" wide. The double tier shelving superstructure will be 24"H and will have 6 compartments which are 20-3/16" wide

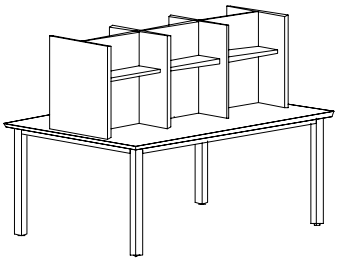

Catalog #	Description	Height"	Length"	Width"	Price
PS-1T72	Single-Tier Double-Faced	39	72	48	
PS-2T72	Double-Tier Double-Faced	53	72	48	

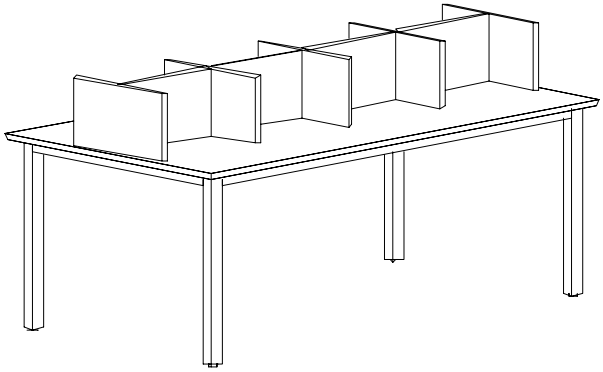

90” Index Table (Single or Double Tier)

The single tier shelving superstructure will be 10" high and will have 8 compartments which are 20-3/16" wide. Double tier shelving superstructure is 24”H and have 8 compartments 20-3/16”W.

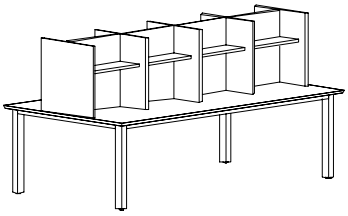

Catalog #	Description	Height"	Length"	Width"	Price
PS-1T90	Single-Tier Double-Faced	39	90	48	
PS-2T90	Double-Tier Double-Faced	53	90	48	

SEE PAGE 131 FOR EDGE DETAILS

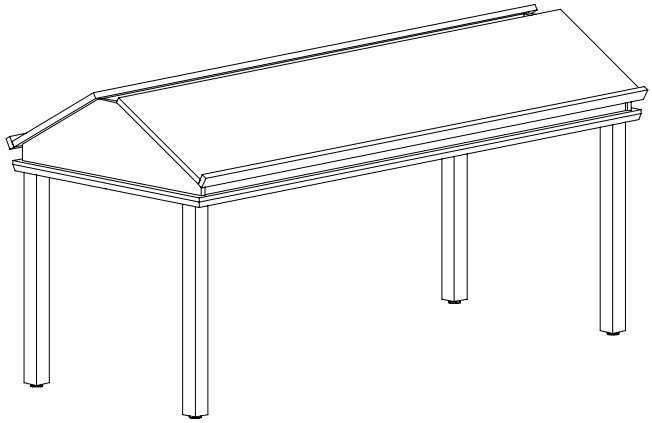

Picture-Book Table

The table will consist of two 78"L x 15-3/4"W x 7/8"T tops mounted at a 27 degree angle. A 5/8" square retaining strip will be mounted on the lower edge of each top. A space of 3" will be provided between the tops to allow a full-length book well. Tables

Catalog #	Description	Height"	Length"	Width"	Price
PS-62PT	62"L Picture-Book Table	33-3/4	62	31	
PS-78PT	78"L Picture-Book Table	33-3/4	78	31	

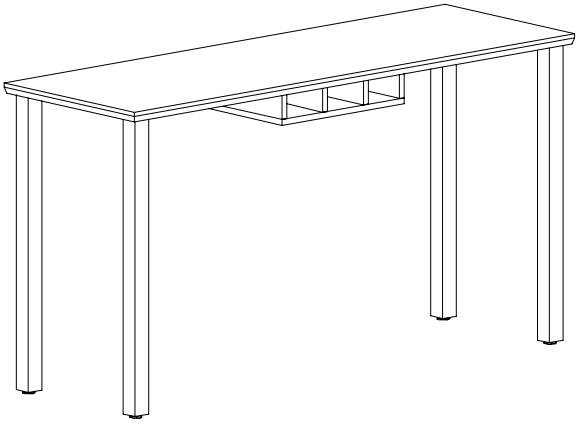

Consultation Table

A three-compartment call-slip rack for 3" x 5" slips will be attached to the underside of the table. Tables are supplied without aprons, and must therefore be specified on order if so desired. (Aprons are necessary but not required for concealing the leg plate on tables with a flush edgeband)

Catalog #	Description	Height"	Length"	Width"	Price
PS-72CT	Consultation Table	39	72	24	

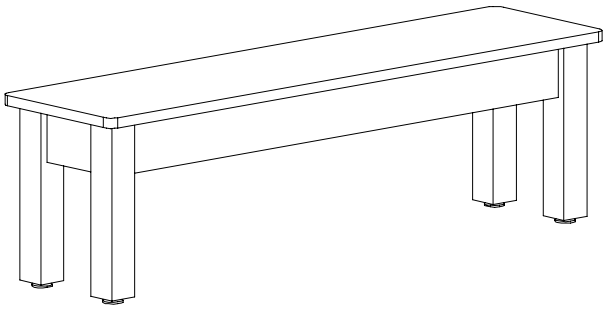

48”L bench shown

Bench

Seat will be 3/4”T red oak veneer plywood edge banded with 1/4”T solid red oak. Leg are made of 2-1/4” square solid red oak with a 1-3/4" diameter threaded leveling glide which is mounted in countersunk and recessed T-nut. Apron is 3” x 1”T solid red

Catalog #	Description	Height"	Length"	Width"	Price
PS-69B	69"L Bench	15	69	12	
PS-48B	48"L Bench	15	48	12	

Planning For & Ordering Edgeband for Providence Series Carrels, Carrel Tables and Display Furniture.

All display *tables* on pages 123-130 only come with a 3/4"T solid red oak DROP edgeband.
Choose from any one of the DROP details below.

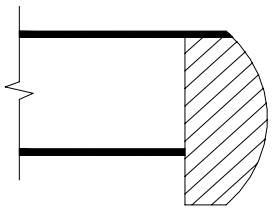

1 1/4" thick top (Internal)
Shallow Bullnose Drop

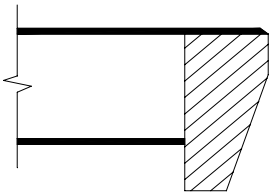

1 1/4" thick top (Internal)
Premier Drop

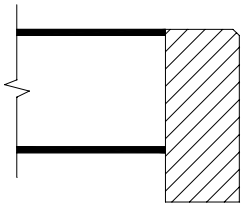

1 1/4" thick top (External)
Montana Drop

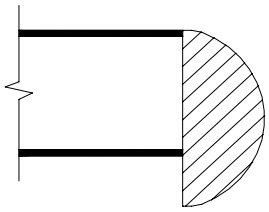

1 1/4" thick top (External)
Bullnose Drop

All other units in this section may use any one of these details.

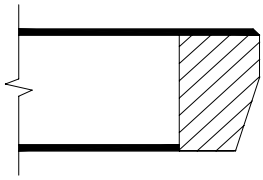

1 1/4" thick top (Internal)
Premier Flush

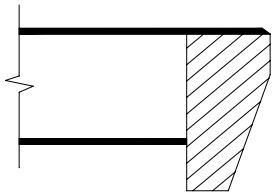

1 1/4" thick top (Internal)
Premier Drop

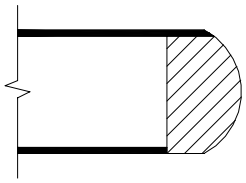

1 1/4" thick top (Internal)
Shallow Bullnose Flush

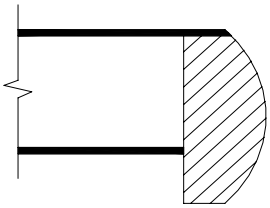

1 1/4" thick top (Internal)
Shallow Bullnose Drop

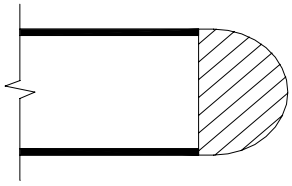

1 1/4" thick top (External)
Bullnose Flush

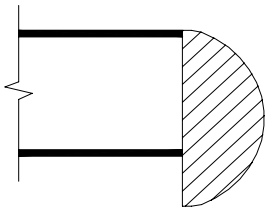

1 1/4" thick top (External)
Bullnose Drop

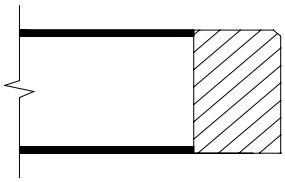

1 1/4" thick top (External)
Montana Flush

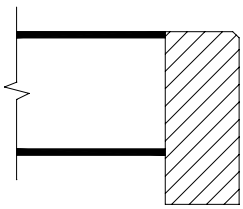

1 1/4" thick top (External)
Montana Drop

ELITE SERIES GENERAL SPECIFICATIONS

All Elite Series table and unit tops will be constructed of 1-1/8" thick, 45-pound density particleboard-core with .050" thick high-pressure laminate and .020" thick backer sheet glued to opposite faces for a finished thickness of 1-1/4". (Note: Table tops can be constructed from 9 or 11-ply lumber core or high pressure laminate *for an additional charge).* Tops will be banded with 3/4"T solid red oak with and profile determined by customer selection from edge band chart. (pg 135) Table edges will be finished to match table end panels.

Tops are fastened to side/end/back panels using 14 gauge steel brackets and top quality wood screws.

Computer table and carrel tops only will have grommets and J-wire managers to provide control and concealment of equipment wires.

All two sided tables will have a banded 12"W x 1"T red oak veneer plywood *keel* that runs the length
of the table and doweled into the end panels. **All one sided tables** will have a banded full length *modesty panel* made of 3/4"T red oak veneer plywood.

End panels will be 1"T plain-sliced red oak veneer plywood. A solid wood 1/2' thick edge band is applied to all exposed panel edges and 1/8" radius . The bottom of each panel base will have two 7/8" diameter leveling glides.

End panels are glued and doweled to modesty/keel panel using 3/4" square solid wood cleats that are glued and screwed on two sides using wood screws.

Curbing and Index Shelving are constructed of 1" veneer-core red oak plywood secured to the table top by screws passing through the table top and into the assembly. Exposed edges will have a 1/2"T solid red oak edge band. The banded edges of the uprights and shelves will receive an 1/8" radius.

Study and Computer Carrels are "starter/adder" design and have 1" T red oak veneer plain-sliced plywood side panels and 3/4"T back panels. End panels are receive a 1/2"T solid red oak band with a 1/8" radius. Back panels receive a 1/4"T solid red oak band with a 1/8" radius. The back panel is aligned using dowels and fastened by 3/4" square solid red oak screw cleat.

Study Carrels only have an 8"D bookshelf mounted on the back panel above the work surface. Shelf is 3/4" red oak veneer plywood banded with 1-3/4"W x 3/4"T solid red oak edge band. Shelf is fastened to panels on three sides with solid red oak cleats.

Computer Carrels only have an 12"D bookshelf mounted on the back panel above the work surface. Shelf is 3/4" red oak veneer plywood banded with a 1-3/4"W x 3/4"T solid red oak edge band. Shelf is fastened to panels on three sides with solid red oak cleats.

Display Unit side panels are 1"T red oak veneer plain-sliced red oak plywood. Back panels are 3/4"T red oak rift cut veneer plywood. A 5/8" x 5/8" (radius on top edge) red oak retainer strip is fastened to the front of the work surface. Shelves and pullouts are 3/4"T red oak veneer plywood with 1/4"T solid red oak edge band. Shelves and pullouts are 3/4" veneer red oak plywood with 1/4" red oak edge band. Atlas stand shelves are provided with full extension ball bearing glides rated for 200 lbs.

Shelves will be 3/4"T red oak veneer plywood with 1/4"T solid red oak edge band unless otherwise noted.

FINISH - See page 5 for finish specifications.

Visit our web site at ***www.russwood.net***

IMPORTANT PLANNING AND ORDERING INFORMATION

Many of the tables in the Elite Series can be constructed with a "Captured" or an "Extended" work surface.

Please note the differences in the two styles below as you plan - and particularly in ordering.

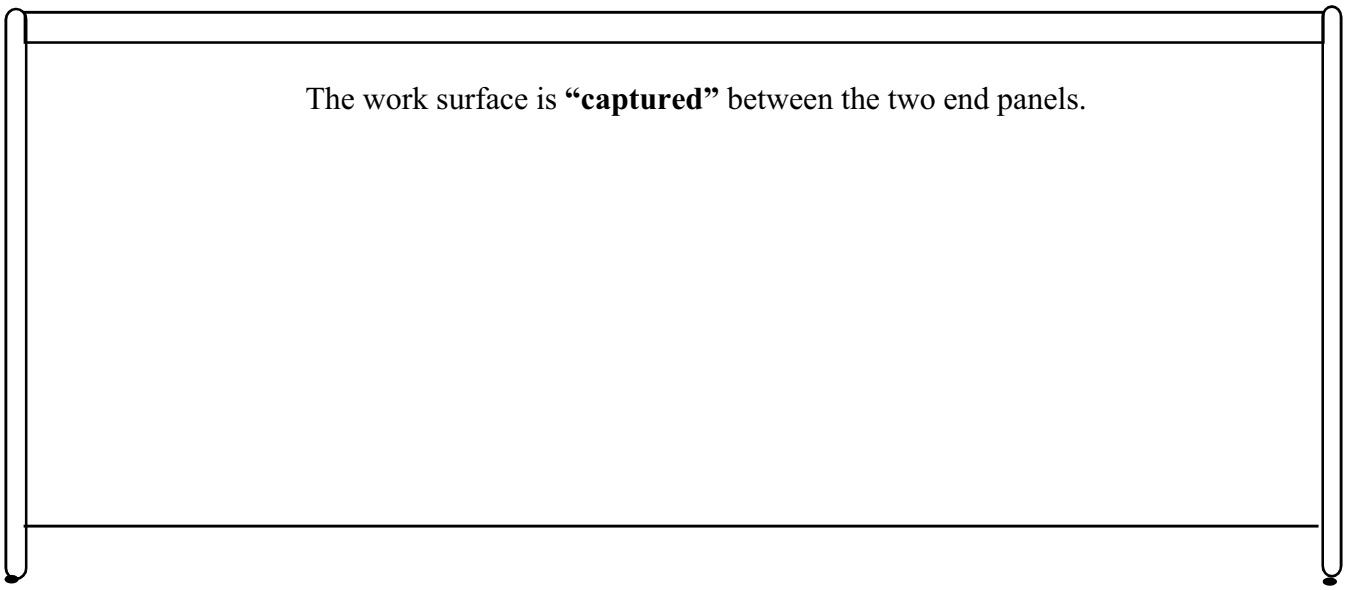

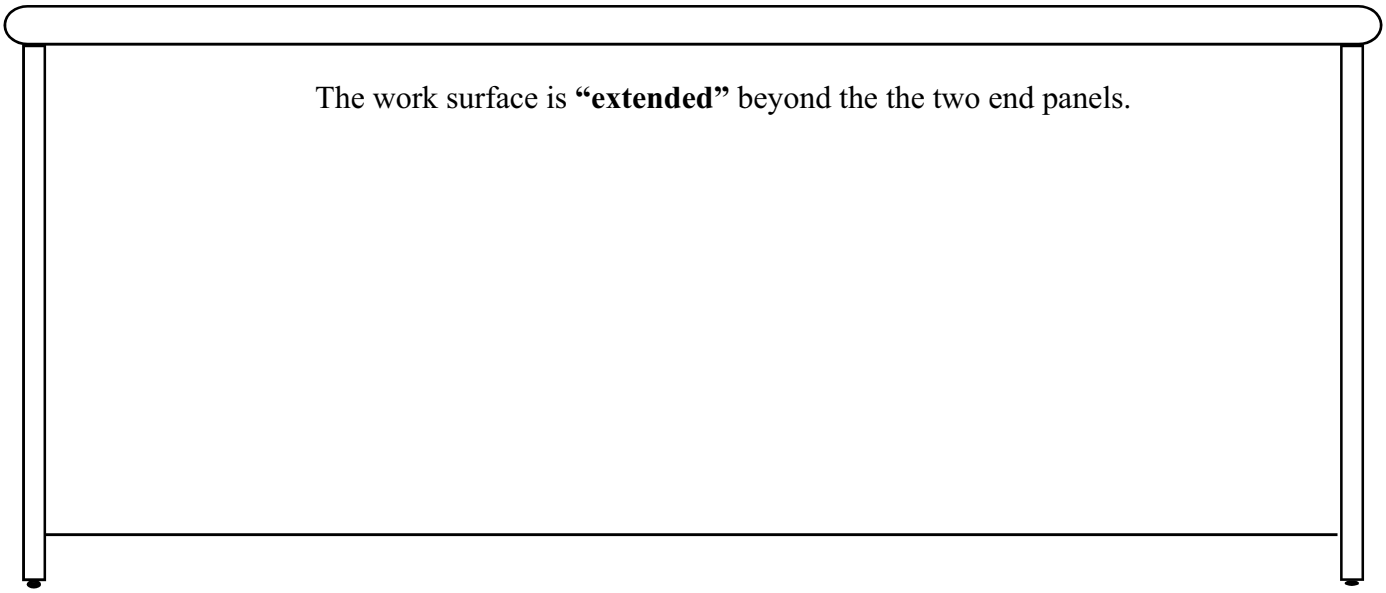

EDGE DETAILS FOR THE ELITE SERIES

Elite Series work surfaces* may have any one of the 3/4"T solid red oak edge details below.

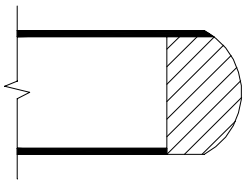

1 1/4" thick top (Internal)
Shallow Bullnose Flush

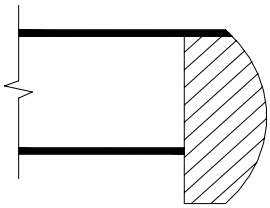

1 1/4" thick top (Internal)
Shallow Bullnose Drop

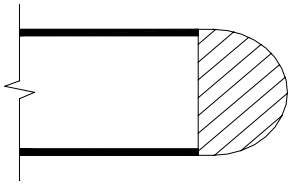

1 1/4" thick top (External)
Bullnose Flush

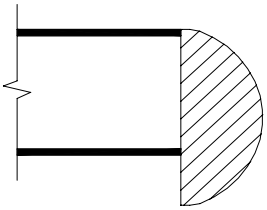

1 1/4" thick top (External)
Bullnose Drop

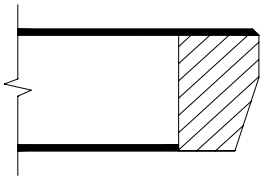

1 1/4" thick top (Internal)
Premier Flush

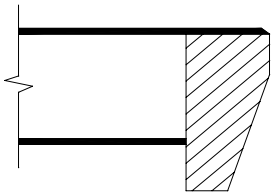

1 1/4" thick top (Internal)
Premier Drop

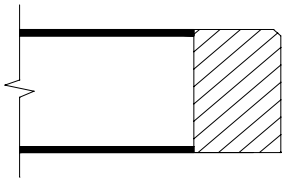

1 1/4" thick top (External)
Montana Flush

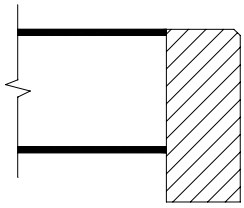

1 1/4" thick top (External)
Montana Drop

*** Edge Detail for Modular Computer Table Page 158**

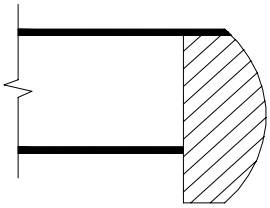

1 1/4" thick top (Internal)
Shallow Bullnose Drop

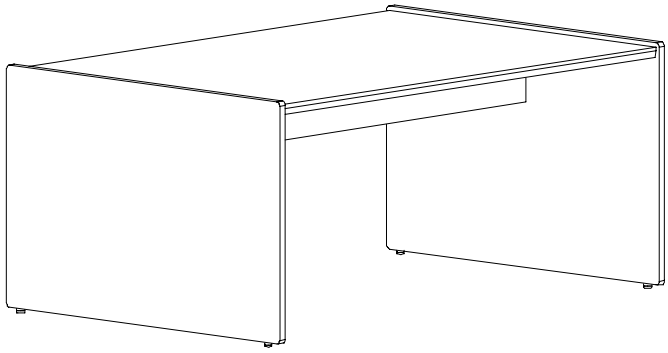

Four-Person Study Table Captured Top

Catalog #	Description	Height"	Length"	Width"	Price
ES-254R01	25" H Four-Person Reading Table	25	60	36	
ES-254R02	25" H Four-Person Reading Table	25	72	36	
ES-254R03	25" H Four-Person Reading Table	25	72	48	
ES-254R04	25" H Four-Person Reading Table	25	72	42	
ES-274R01	27"H Four-Person Reading Table	27	60	36	
ES-274R02	27" H Four-Person Reading Table	27	72	36	
ES-274R03	27"H Four-Person Reading Table	27	72	48	
ES-274R04	27" H Four-Person Reading Table	27	72	42	
ES-294R01	29" H Four-Person Reading Table	29	60	36	
ES-294R02	29" H Four-Person Reading Table	29	72	36	
ES-294R03	29" H Four-Person Reading Table	29	72	48	
ES-294R04	29" H Four-Person Reading Table	29	72	42	

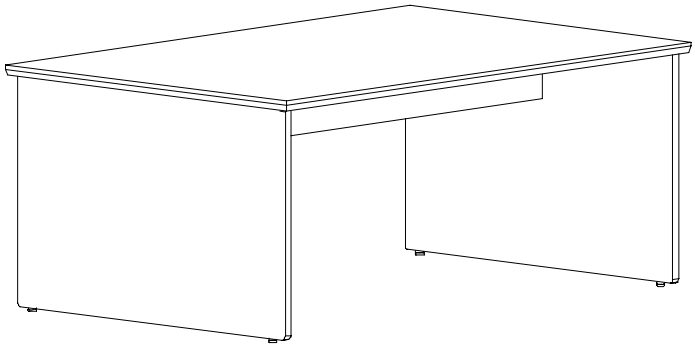

Four-Person Study Table Extended Top

Catalog #	Description	Height"	Length"	Width"	Price
ES-254R10	25"H Four-Person Reading Table	25	60	36	
ES-254R11	25"H Four-Person Reading Table	25	72	36	
ES-254R12	25"H Four-Person Reading Table	25	72	48	
ES-254R13	25"H Four-Person Reading Table	25	72	42	
ES-274R10	27"H Four-Person Reading Table	27	60	36	
ES-274R11	27"H Four-Person Reading Table	27	72	36	
ES-274R12	27"H Four-Person Reading Table	27	72	48	
ES-274R13	27"H Four-Person Reading Table	27	72	42	
ES-294R10	29"H Four-Person Reading Table	29	60	36	
ES-294R11	29"H Four-Person Reading Table	29	72	36	
ES-294R12	29"H Four-Person Reading Table	29	72	48	
ES-294R13	29"H Four-Person Reading Table	29	72	42	

See Page 135 For Edge Details

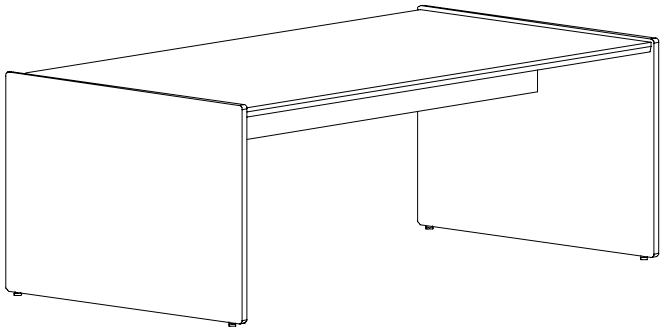

Six-Person Study Table Captured Top

Catalog #	Description	Height"	Length"	Width"	Price
ES-256R01	25"H Six-Person Reading Table	25	90	36	
ES-256R02	25"H Six-Person Reading Table	25	90	48	
ES-256R03	25"H Six-Person Reading Table	25	90	42	
ES-276R01	27"H Six-Person Reading Table	27	90	36	
ES-276R02	27"H Six-Person Reading Table	27	90	48	
ES-276R03	27"H Six-Person Reading Table	27	90	42	
ES-296R01	29"H Six-Person Reading Table	29	90	36	
ES-296R02	29"H Six-Person Reading Table	29	90	48	
ES-296R03	29"H Six-Person Reading Table	29	90	42	

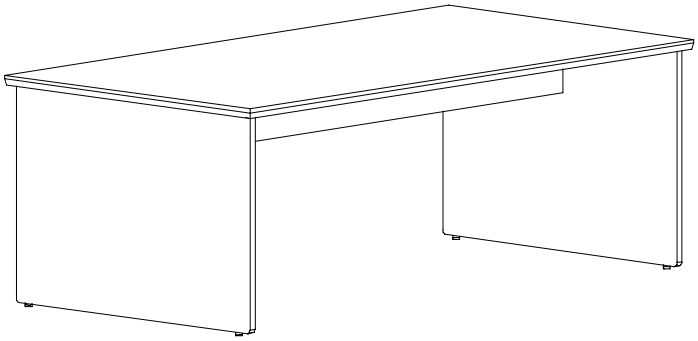

Six-Person Study Table Extended Top

Catalog #	Description	Height"	Length"	Width"	Price
ES-256R10	25"H Six-Person Reading Table	25	90	36	
ES-256R12	25"H Six-Person Reading Table	25	90	42	
ES-256R11	25"H Six-Person Reading Table	25	90	48	
ES-276R10	27"H Six-Person Reading Table	27	90	36	
ES-276R12	27"H Six-Person Reading Table	27	90	42	
ES-276R11	27"H Six-Person Reading Table	27	90	48	
ES-296R10	29"H Six-Person Reading Table	29	90	36	
ES-296R12	29"H Six-Person Reading Table	29	90	42	
ES-296R11	29"H Six-Person Reading Table	29	90	48	

See Page 135 For Edge Details

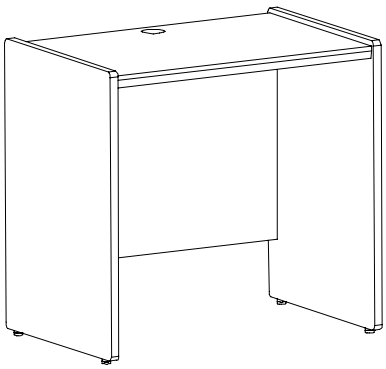

30”L x 24”W Flat Screen Computer Table (Starter) Captured Top

Work surface is connected to the end panels via 14 gauge metal bolt cleat using a threaded insert . The back panel is doweled into the end panel connected with 3/4” square wooden screw cleats.

This unit can be used in conjunction with any 24” W computer table adder. Starter and adder units will be shipped unassembled.

Catalog #	Description	Height"	Length"	Width"	Price
ES-302425	Sitting-Height Unit, child	25	30	24	
ES-302427	Intermediate-Height Unit	27	30	24	
ES-302429	Sitting-Height Unit, adult	29	30	24	
ES-302439	Standing-Height Unit	39	30	24	

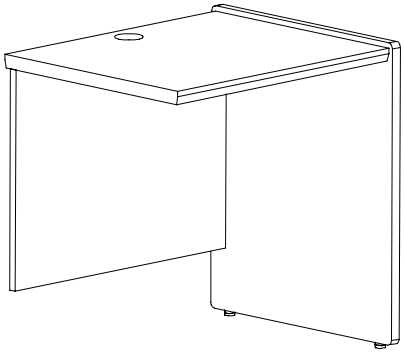

30”L x 24”W Flat Screen Computer Table (Adder) Captured Top

Work surface is connected to the end panels via 14 gauge metal bolt cleat using a threaded insert . The back panel is doweled into the end panel connected with 3/4” square wooden screw cleats.

This unit can be used in conjunction with any one 24”W starter and any series of 24”W adders. Starter and adder units will be shipped unassembled.

Catalog #	Description	Height"	Length"	Width"	Price
ES-302425A	Sitting-Height Unit, child	25	30	24	
ES-302427A	Intermediate-Height Unit	27	30	24	
ES-302429A	Sitting-Height Unit, adult	29	30	24	
ES-302439A	Standing-Height Unit	39	30	24	

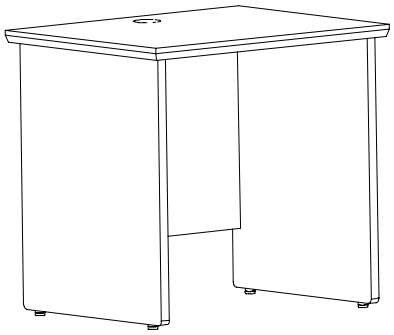

30”L x 24”W Flat Screen Computer Table Extended Top

Catalog #	Description	Height"	Length"	Width"	Price
ES-302425E	Sitting-Height Unit, child	25	30	24	
ES-302427E	Intermediate-Height Unit	27	30	24	
ES-302429E	Sitting-Height Unit, adult	29	30	24	
ES-302439E	Standing-Height Unit	39	30	24	

See Page 135 For Edge Details

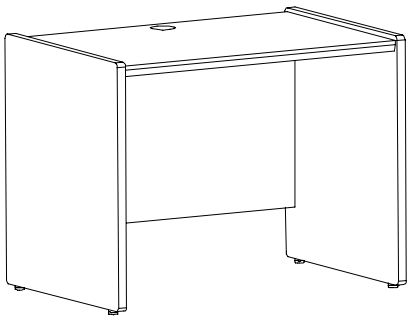

36”L x 24”W Flat Screen Computer Table (Starter) Captured Top

Work surface is connected to the end panels via 14 gauge metal bolt cleat using a threaded insert . The back panel is doweled into the end panel connected with 3/4” square wooden screw cleats.

This unit can be used in conjunction with any 24” W computer table adder. Starter and adder units will be shipped unassembled.

Catalog #	Description	Height"	Length"	Width"	Price
ES-362425	Sitting-Height Unit,child	25	36	24	
ES-362427	Intermediate-Height Unit	27	36	24	
ES-362429	Sitting-Height Unit, adult	29	36	24	
ES-362439	Standing-Height Unit	39	36	24	

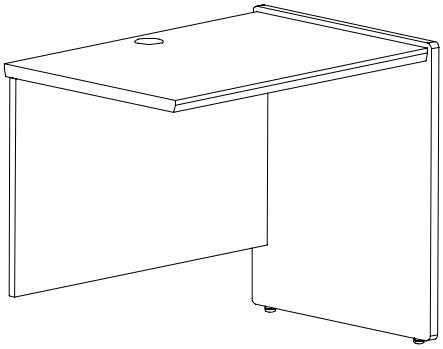

36”L x 24”W Flat Screen Computer Table (Adder) Captured Top

Work surface is connected to the end panels via 14 gauge metal bolt cleat using a threaded insert . The back panel is doweled into the end panel connected with 3/4” square wooden screw cleats.

This unit can be used in conjunction with any one 24”W starter and any series of 24”W adders. Starter and adder units will be shipped unassembled.

Catalog #	Description	Height"	Length"	Width"	Price
ES-362425A	Sitting-Height Unit,child	25	36	24	
ES-362427A	Intermediate-Height Unit	27	36	24	
ES-362429A	Sitting-Height Unit, adult	29	36	24	
ES-362439A	Standing-Height Unit	39	36	24	

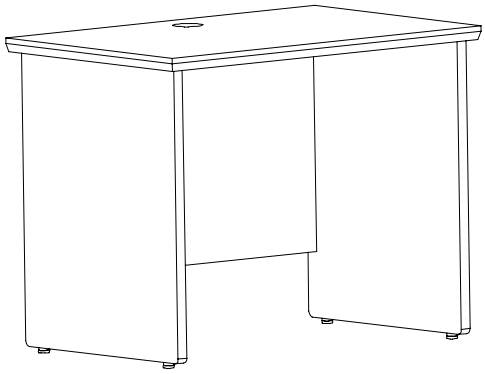

36”L x 24”W Flat Screen Computer Table Extended Top

Catalog #	Description	Height"	Length"	Width"	Price
ES-362425E	Sitting-Height Unit,child	25	36	24	
ES-362427E	Intermediate-Height Unit	27	36	24	
ES-362429E	Sitting-Height Unit, adult	29	36	24	
ES-362439E	Standing-Height Unit	39	36	24	

See Page 135 For Edge Details

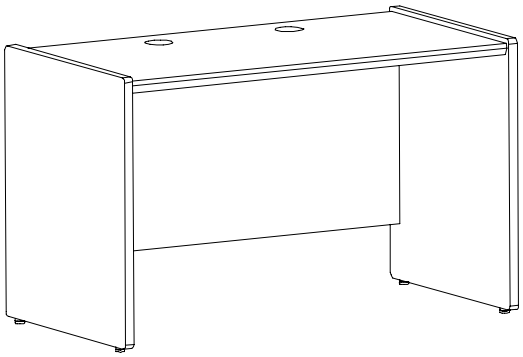

48”L x 24”W Flat Screen Computer Table (Starter) Captured Top

Work surface is connected to the end panels via 14 gauge metal bolt cleat using a threaded insert . The back panel is doweled into the end panel connected with 3/4” square wooden screw cleats.

This unit can be used in conjunction with any 24” W computer table adder. Starter and adder units will be shipped unassembled.

Catalog #	Description	Height"	Length"	Width"	Price
ES-482425	Sitting-Height Unit, child	25	48	24	
ES-482427	Intermediate Unit,	27	48	24	
ES-482429	Sitting-Height Unit	29	48	24	
ES-482439	Standing-Height Unit	39	48	24	

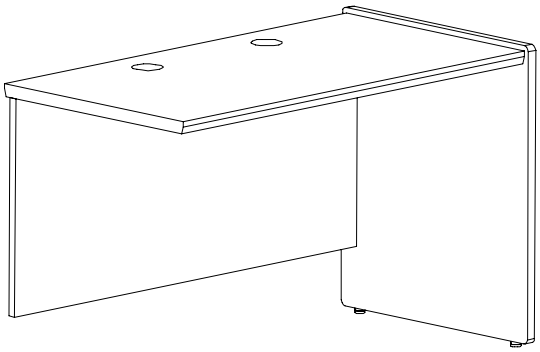

48”L x 24”W Flat Screen Computer Table (Adder) Captured Top

Work surface is connected to the end panels via 14 gauge metal bolt cleat using a threaded insert . The back panel is doweled into the end panel connected with 3/4” square wooden screw cleats.

This unit can be used in conjunction with any one 24”W starter and any series of 24”W adders. Starter and adder units will be shipped unassembled.

Catalog #	Description	Height"	Length"	Width"	Price
ES-482425A	Sitting-Height Unit, child	25	48	24	
ES-482427A	Intermediate Unit,	27	48	24	
ES-482429A	Sitting-Height Unit	29	48	24	
ES-482439A	Standing-Height Unit	39	48	24	

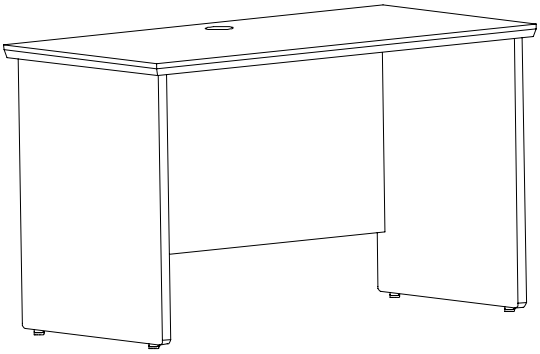

48”L x 24”W Flat Screen Computer Table Extended Top

Catalog #	Description	Height"	Length"	Width"	Price
ES-482425E	Sitting-Height Unit,child	25	48	24	
ES-482427E	Intermediate-Height Unit	27	48	24	
ES-482429E	Sitting-Height Unit,adult	29	48	24	
ES-482439E	Standing-Height Unit	39	48	24	

See Page 135 For Edge Details

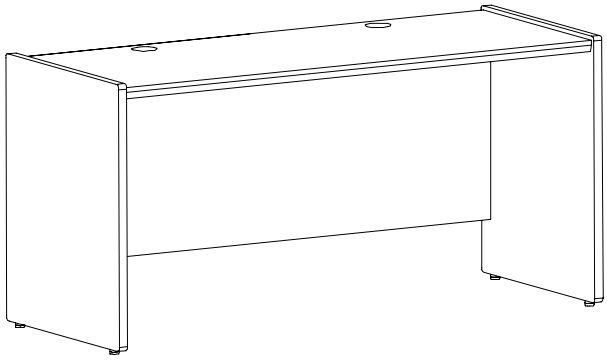

60”L x 24”W Flat Screen Computer Table (Starter) Captured Top

Work surface is connected to the end panels via 14 gauge metal bolt cleat using a threaded insert . The back panel is doweled into the end panel connected with 3/4” square wooden screw cleats.

This unit can be used in conjunction with any 24” W computer table adder. Starter and adder units will be shipped unassembled.

Catalog #	Description	Height"	Length"	Width"	Price
ES-602425	Sitting-Height Unit, child	25	60	24	
ES-602427	Intermediate Unit, 60" L x 24" W x 27" H (panel)	27	60	24	
ES-602429	Sitting-Height Unit, 60" L x 24" W x 29" H (panel)	29	60	24	
ES-602439	Standing-Height Unit, 60" L x 24" W x 39" H	39	60	24	

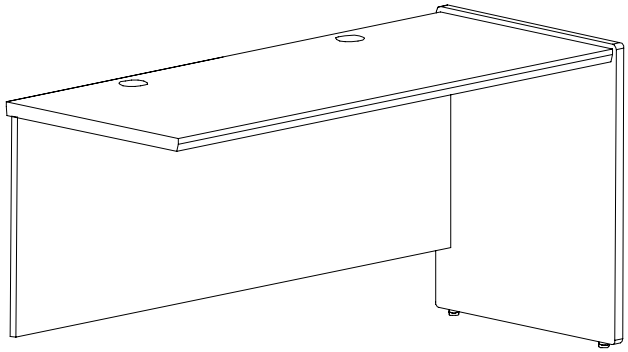

60”L x 24”W Flat Screen Computer Table (Adder) Captured Top

Work surface is connected to the end panels via 14 gauge metal bolt cleat using a threaded insert . The back panel is doweled into the end panel connected with 3/4” square wooden screw cleats.

This unit can be used in conjunction with any one 24”W starter and any series of 24”W adders. Starter and adder units will be shipped unassembled.

Catalog #	Description	Height"	Length"	Width"	Price
ES-602425A	Sitting-Height Unit, child	25	60	24	
ES-602427A	Intermediate Unit, 60" L x 24" W x 27" H (panel)	27	60	24	
ES-602429A	Sitting-Height Unit, 60" L x 24" W x 29" H (panel)	29	60	24	
ES-602439A	Standing-Height Unit, 60" L x 24" W x 39" H	39	60	24	

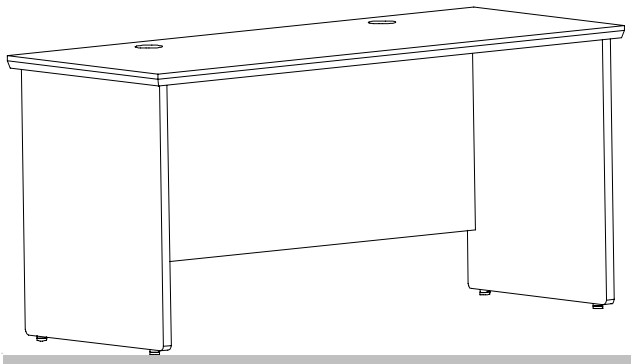

60”L x 24”W Flat Screen Computer Table Extended Top

Catalog #	Description	Height"	Length"	Width"	Price
ES-602425E	Sitting-Height Unit, child	25	60	24	
ES-602427E	Intermediate Unit, 60" L x 24" W x 27" H (panel)	27	60	24	
ES-602429E	Sitting-Height Unit, 60" L x 24" W x 29" H (panel)	29	60	24	
ES-602439E	Standing-Height Unit, 60" L x 24" W x 39" H	39	60	24	

See Page 135 For Edge Details

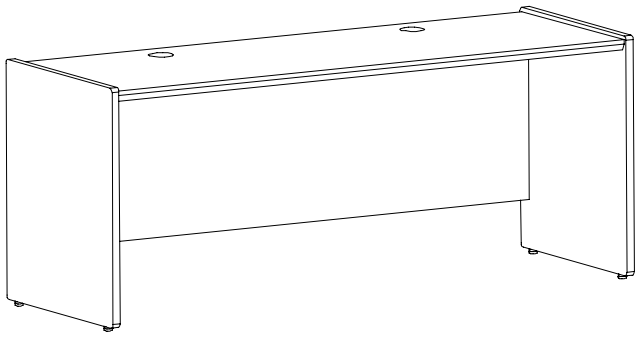

72”L x 24”W Flat Screen Computer Table Captured Top

Catalog #	Description	Height"	Length"	Width"	Price
ES-722425	Sitting-Height Unit, child	25	72	24	
ES-722427	Intermediate Unit, 72" L x 24" W x 27" H (panel)	27	72	24	
ES-722429	Sitting-Height Unit, 72" L x 24" W x 29" H (panel)	29	72	24	
ES-722439	Standing-Height Unit, 72" L x 24" W x 39" H	39	72	24	

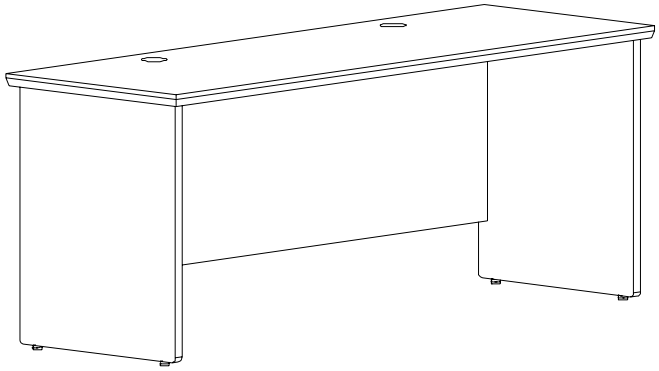

72”L x 24”W Flat Screen Computer Table Extended Top

Catalog #	Description	Height"	Length"	Width"	Price
ES-722425E	Sitting-Height Unit, child	25	72	24	
ES-722427E	Intermediate Unit, 72" L x 24" W x 27" H (panel)	27	72	24	
ES-722429E	Sitting-Height Unit, 72" L x 24" W x 29" H (panel)	29	72	24	
ES-722439E	Standing-Height Unit, 72" L x 24" W x 39" H	39	72	24	

“I find that a great part of the information I have, was acquired by looking up something and finding something else on the way.”

Franklin P. Adams

See Page 135 For Edge Details

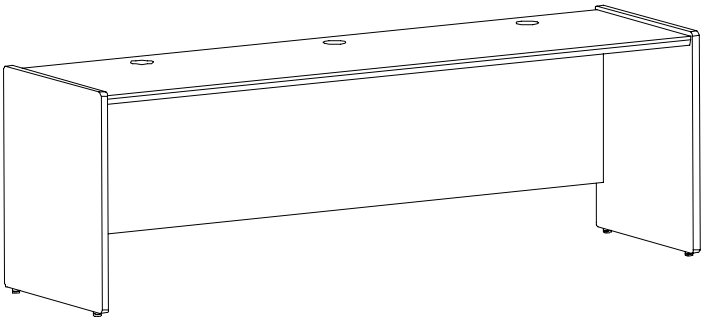

90”L x 24”W Flat Screen Computer Table Captured Top

Catalog #	Description	Height"	Length"	Width"	Price
ES-902425	Sitting-Height Unit, child	25	90	24	
ES-902427	Intermediate Unit, 72" L x 24" W x 27" H (panel)	27	90	24	
ES-902429	Sitting-Height Unit, 72" L x 24" W x 29" H (panel)	29	90	24	
ES-902439	Standing-Height Unit, 72" L x 24" W x 39" H	39	90	24	

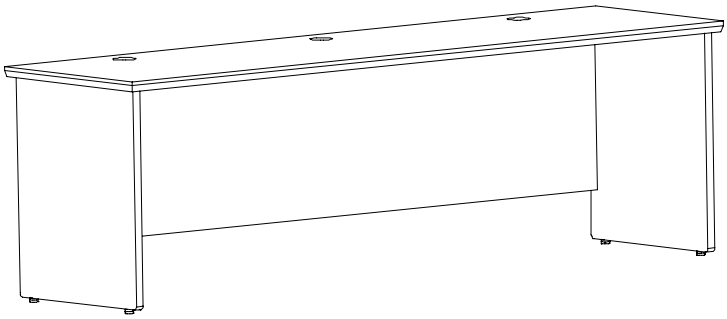

90”L x 24”W Flat Screen Computer Table Extended Top

Catalog #	Description	Height"	Length"	Width"	Price
ES-902425E	Sitting-Height Unit, child	25	90	24	
ES-902427E	Intermediate Unit, 72" L x 24" W x 27" H (panel)	27	90	24	
ES-902429E	Sitting-Height Unit, 72" L x 24" W x 29" H (panel)	29	90	24	
ES-902439E	Standing-Height Unit, 72" L x 24" W x 39" H	39	90	24	

“I do not feel obliged to believe that the same God who has endowed us with
sense, reason, and intellect
has intended us to forgo their use.”
Galileo Galilei

See Page 135 For Edge Details

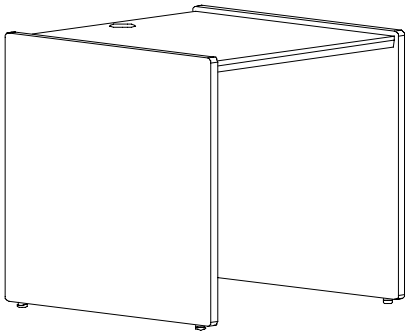

30” Square Computer Table (Starter) Captured Top

Work surface is connected to the end panels via a 14 gauge metal bolt cleat using a threaded insert . The back panel is doweled into the end panel connected with 3/4” square wooden screw cleats.

This unit can be used in conjunction with any 30” W computer table adder. Starter and adder units will be shipped unassembled.

Catalog #	Description	Height"	Length"	Width"	Price
ES-303025	Sitting-Height Unit, child	25	30	30	
ES-303027	Intermediate-Height Unit	27	30	30	
ES-303029	Sitting-Height Unit, adult	29	30	30	
ES-303039	Standing-Height Unit	39	30	30	

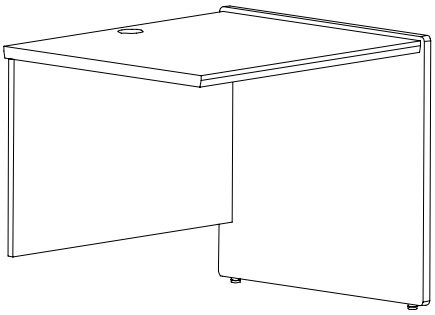

30” Square Computer Table (Adder) Captured Top

Work surface is connected to the end panels via a 14 gauge metal bolt cleat using a threaded insert . The back panel is doweled into the end panel connected with 3/4” square wooden screw cleats.

This unit can be used in conjunction with any one 30”W starter and any series of 30”W adders. Starter and adder units will be shipped unassembled.

Catalog #	Description	Height"	Length"	Width"	Price
ES-303025A	Sitting-Height Unit, child	25	30	30	
ES-303027A	Intermediate-Height Unit	27	30	30	
ES-303029A	Sitting-Height Unit, adult	29	30	30	
ES-303039A	Standing-Height Unit	39	30	30	

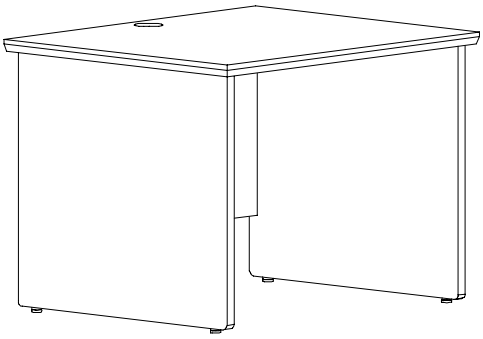

30” Square Computer Table Extended Top

Catalog #	Description	Height"	Length"	Width"	Price
ES-303025E	Sitting-Height Unit, child	25	30	30	
ES-303027E	Intermediate-Height Unit	27	30	30	
ES-303029E	Sitting-Height Unit, adult	29	30	30	
ES-303039E	Standing-Height Unit	39	30	30	

See Page 135 For Edge Details

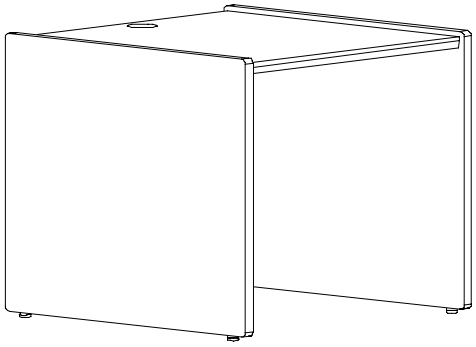

36”L x 30”W Computer Table (Starter) Captured Top

Work surface is connected to the end panels via a 14 gauge metal bolt cleat using a threaded insert . The back panel is doweled into the end panel connected with 3/4” square wooden screw cleats.

This unit can be used in conjunction with any 30” W computer table adder. Starter and adder units will be shipped unassembled.

Catalog #	Description	Height"	Length"	Width"	Price
ES-363025	Sitting-Height Unit,child	25	36	30	
ES-363027	Intermediate-Height Unit	27	36	30	
ES-363029	Sitting-Height Unit, adult	29	36	30	
ES-363039	Standing-Height Unit	39	36	30	

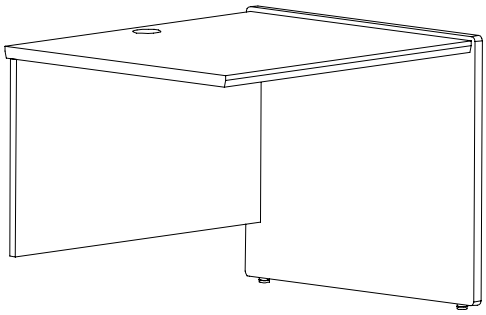

36”L x 30”W Computer Table (Adder) Captured Top

Work surface is connected to the end panels via a 14 gauge metal bolt cleat using a threaded insert . The back panel is doweled into the end panel connected with 3/4” square wooden screw cleats.

This unit can be used in conjunction with any one 30”W starter and any series of 30”W adders. Starter and adder units will be shipped unassembled..

Catalog #	Description	Height"	Length"	Width"	Price
ES-363025A	Sitting-Height Unit,child	25	36	30	
ES-363027A	Intermediate-Height Unit	27	36	30	
ES-363029A	Sitting-Height Unit, adult	29	36	30	
ES-363039A	Standing-Height Unit	39	36	30	

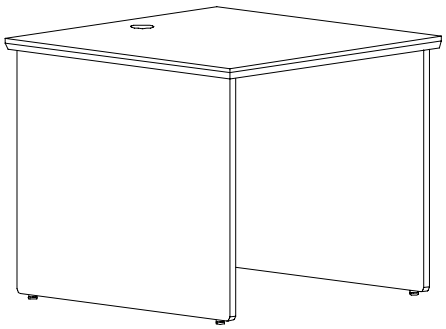

36”L x 30”W Computer Table Extended Top

Catalog #	Description	Height"	Length"	Width"	Price
ES-363025E	Sitting-Height Unit,child	25	36	30	
ES-363027E	Intermediate-Height Unit	27	36	30	
ES-363029E	Sitting-Height Unit, adult	29	36	30	
ES-363039E	Standing-Height Unit	29	36	30	

See Page 135 For Edge Details

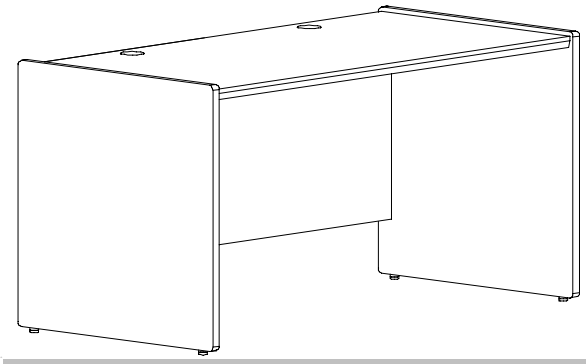

48”L x 30”W Computer Table (Starter) Captured Top

Work surface is connected to the end panels via a 14 gauge metal bolt cleat using a threaded insert . The back panel is doweled into the end panel connected with 3/4” square wooden screw cleats.

This unit can be used in conjunction with any 30” W computer table adder. Starter and adder units will be shipped unassembled.

Catalog #	Description	Height"	Length"	Width"	Price
ES-483025	Sitting-Height Unit, child	25	48	30	
ES-483027	Intermediate Unit,	27	48	30	
ES-483029	Sitting-Height Unit	29	48	30	
ES-483039	Standing-Height Unit	39	48	30	

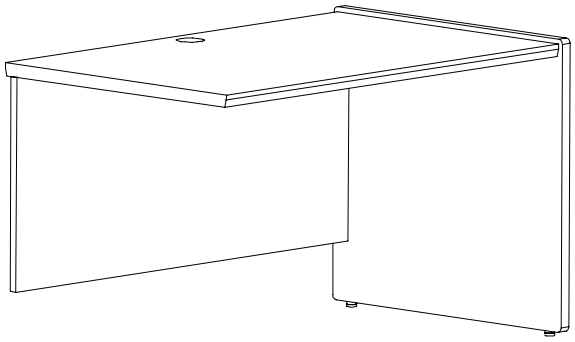

48”L x 30”W Computer Table (Adder) Captured Top

Work surface is connected to the end panels via a 14 gauge metal bolt cleat using a threaded insert . The back panel is doweled into the end panel connected with 3/4” square wooden screw cleats.

This unit can be used in conjunction with any one 30”W starter and any series of 30”W adders. Starter and adder units will be shipped unassembled.

Catalog #	Description	Height"	Length"	Width"	Price
ES-483025A	Sitting-Height Unit, child	25	48	30	
ES-483027A	Intermediate Unit,	27	48	30	
ES-483029A	Sitting-Height Unit	29	48	30	
ES-483039A	Standing-Height Unit	39	48	30	

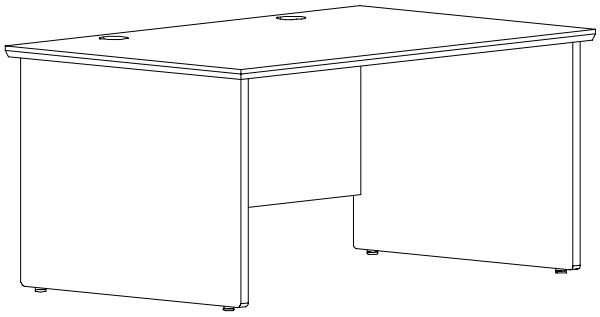

48”L x 30”W Computer Table Extended Top

Catalog #	Description	Height"	Length"	Width"	Price
ES-483025E	Sitting-Height Unit,child	25	48	30	
ES-483027E	Intermediate-Height Unit	27	48	30	
ES-483029E	Sitting-Height Unit,adult	29	48	30	
ES-483039E	Standing-Height Unit	39	48	30	

See Page 135 For Edge Details

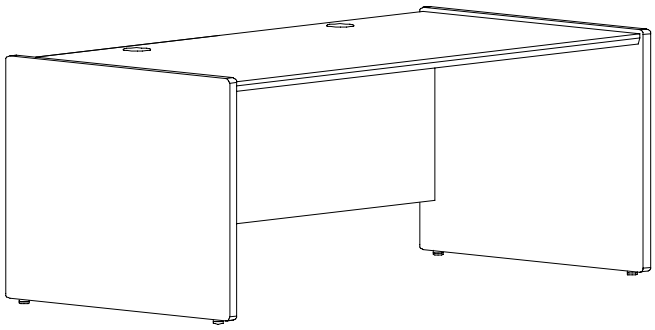

60”L x 30”W Computer Table (Starter) Captured Top

Work surface is connected to the end panels via a 14 gauge metal bolt cleat using a threaded insert . The back panel is doweled into the end panel connected with 3/4” square wooden screw cleats.

This unit can be used in conjunction with any 30” W computer table adder. Starter and adder units will be shipped unassembled.

Catalog #	Description	Height"	Length"	Width"	Price
ES-603025	Sitting-Height Unit, child	25	60	30	
ES-603027	Intermediate Unit, 60" L x 30" W x 27" H (panel)	27	60	30	
ES-603029	Sitting-Height Unit, 60" L x 30" W x 29" H (panel)	29	60	30	
ES-603039	Standing-Height Unit, 60" L x 30" W x 39" H (leg)	39	60	30	

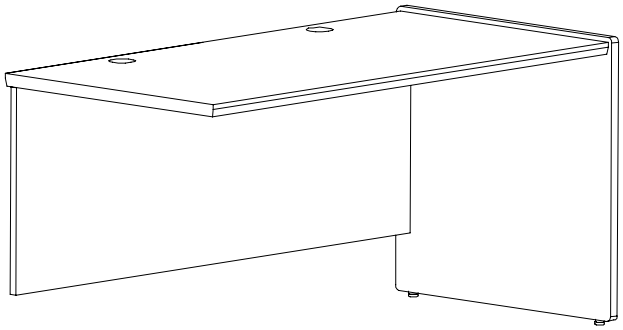

60”L x 30”W Computer Table (Adder) Captured Top

Work surface is connected to the end panels via a 14 gauge metal bolt cleat using a threaded insert . The back panel is doweled into the end panel connected with 3/4” square wooden screw cleats.

This unit can be used in conjunction with any one 30”W starter and any series of 30”W adders. Starter and adder units will be shipped unassembled.

Catalog #	Description	Height"	Length"	Width"	Price
ES-603025A	Sitting-Height Unit, child	25	60	30	
ES-603027A	Intermediate Unit, 60" L x 30" W x 27" H (panel)	27	60	30	
ES-603029A	Sitting-Height Unit, 60" L x 30" W x 29" H (panel)	29	60	30	
ES-603039A	Standing-Height Unit, 60" L x 30" W x 39" H (leg)	39	60	30	

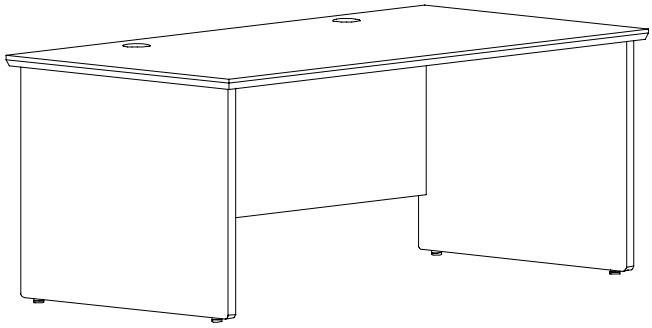

60”L x 30”W Computer Table Extended Top

Catalog #	Description	Height"	Length"	Width"	Price
ES-603025E	Sitting-Height Unit,child	25	60	30	
ES-603027E	Intermediate-Height Unit	27	60	30	
ES-603029E	Sitting-Height Unit, adult	29	60	30	
ES-603039E	Standing-Height Unit	29	60	30	

See Page 135 For Edge Details

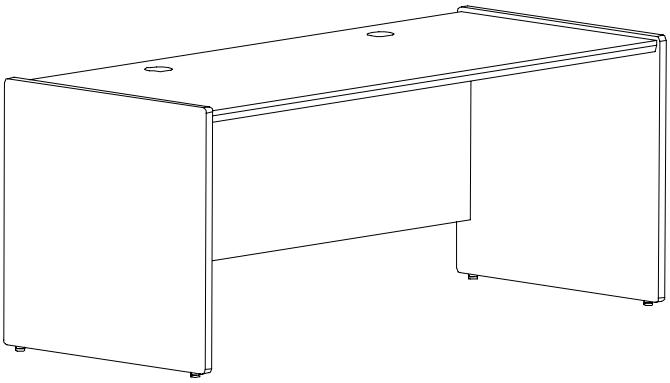

72”L x 30”W Computer Table Captured Top

Catalog #	Description	Height"	Length"	Width"	Price
ES-723025	Sitting-Height Unit,child	25	72	30	
ES-723027	Intermediate-Height Unit	27	72	30	
ES-723029	Sitting-Height Unit, adult	29	72	30	
ES-723039	Standing-Height Unit	29	72	30	

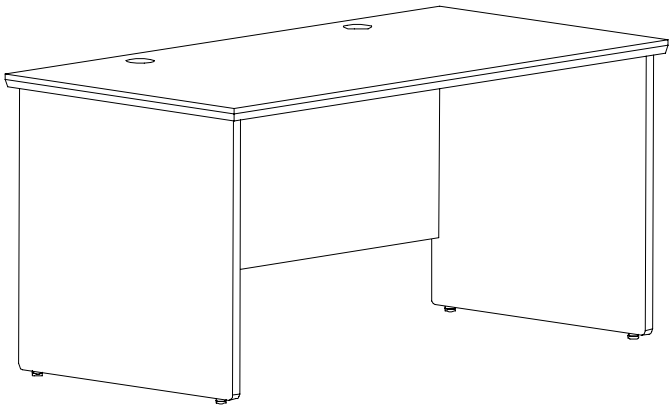

72”L x 30”W Computer Table Extended Top

Catalog #	Description	Height"	Length"	Width"	Price
ES-723025E	Sitting-Height Unit,child	25	72	30	
ES-723027E	Intermediate-Height Unit	27	72	30	
ES-723029E	Sitting-Height Unit, adult	29	72	30	
ES-723039E	Standing-Height Unit	29	72	30	

“I’ll moider da bum.”

Heavyweight boxer Tony Galento, when asked what he thought of William Shakespeare

See Page 135 For Edge Details

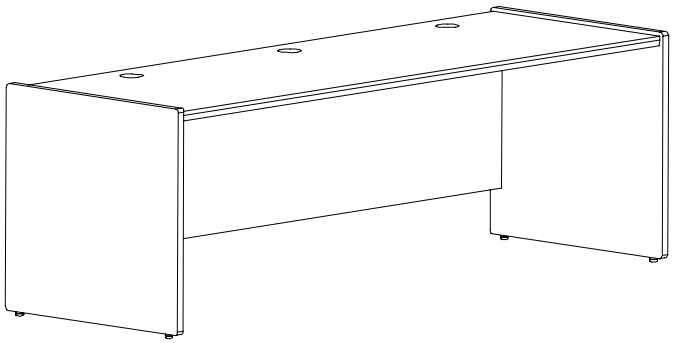

90”L x 30”W Computer Table Captured Top

Catalog #	Description	Height"	Length"	Width"	Price
ES-903025	Sitting-Height Unit,child	25	90	30	
ES-903027	Intermediate-Height Unit	27	90	30	
ES-903029	Sitting-Height Unit, adult	29	90	30	
ES-903039	Standing-Height Unit	29	90	30	

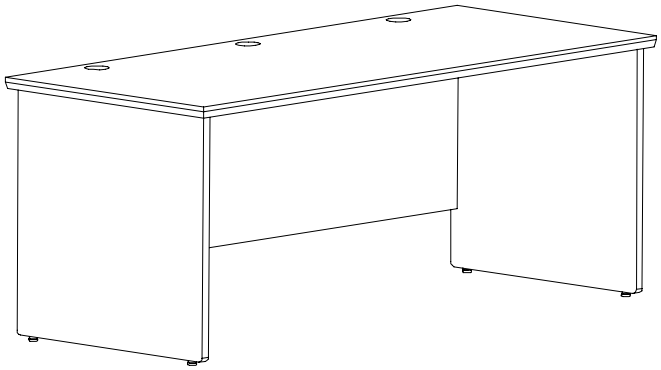

90”L x 30”W Computer Table Extended Top

Catalog #	Description	Height"	Length"	Width"	Price
ES-903025E	Sitting-Height Unit,child	25	90	30	
ES-903027E	Intermediate-Height Unit	27	90	30	
ES-903029E	Sitting-Height Unit, adult	29	90	30	
ES-903039E	Standing-Height Unit	29	90	30	

“I have not failed. I’ve just found 10,000 ways that won’t work.”
Thomas Alva Edison

See Page 135 For Edge Details

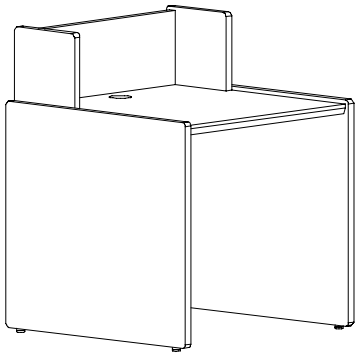

36” Square Computer Table w/curbing Captured Top

10"H curbing will run the entire width inside the end panels, as well as 10" along each side to aid with wire connection concealment.

Catalog #	Description	Height"	Length"	Width"	Price
ES-363625	Single-Station Unit, elementary sitting height	25	36	36	
ES-363627	Single-Station Unit, intermediate height	27	36	36	
ES-363629	Single-Station Unit, adult sitting height	29	36	36	
ES-363639	Single-Station Unit, standing height	39	36	36	

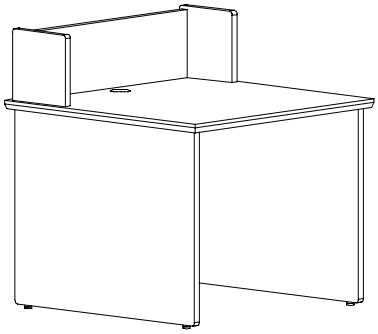

36” Square Computer Table w/curbing Extended Top

10"H curbing will run the entire width inside the end panels, as well as 10" along each side to aid with wire connection concealment.

Catalog #	Description	Height"	Length"	Width"	Price
ES-363625E	Single-Station Unit, elementary sitting height	25	36	36	
ES-363627E	Single-Station Unit, intermediate height	27	36	36	
ES-363629E	Single-Station Unit, adult sitting height	29	36	36	
ES-363639E	Single-Station Unit, standing height	39	36	36	

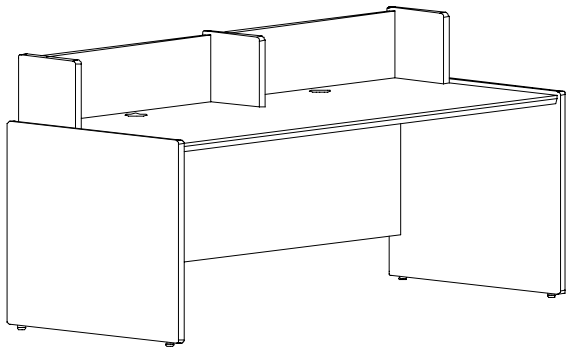

72”L x 36”W Computer Table w/curbing Captured Top

10"H curbing will run the entire width inside the end panels, as well as 10" along each side to aid with wire connection concealment.

Catalog #	Description	Height"	Length"	Width"	Price
ES-723625	Double-Station Unit, elementary sitting height	25	72	36	
ES-723627	Double-Station Unit, intermediate height	27	72	36	
ES-723629	Double-Station Unit, adult sitting height	29	72	36	
ES-723639	Double-Station Unit, standing height	39	72	36	

See Page 135 For Edge Details

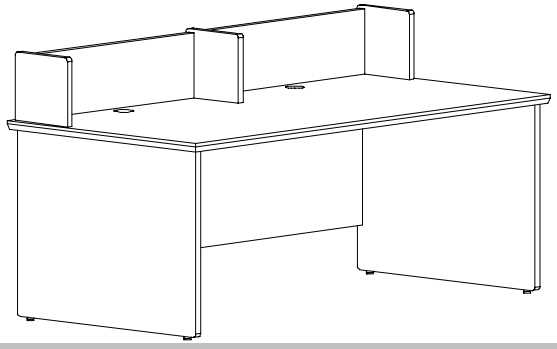

72”L x 36”W Computer Table w/curbing Extended Top

10"H curbing will run the entire width inside the end panels, as well as 10" along each side to aid with wire connection concealment.

Catalog #	Description	Height"	Length"	Width"	Price
ES-723625E	Double-Station Unit, elementary sitting height	25	72	36	
ES-723627E	Double-Station Unit,intermediate height	27	72	36	
ES-723629E	Double-Station Unit,adult sitting height	29	72	36	
ES-723639E	Double-Station Unit,standing height	39	72	36	

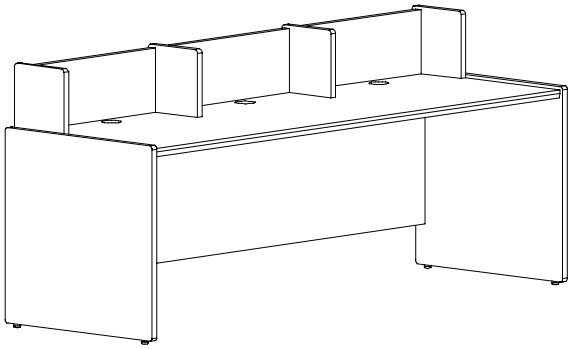

90”L x 36”W Computer Table w/curbing Captured Top

10"H curbing will run the entire width inside the end panels, as well as 10" along each side to aid with wire connection concealment.

Catalog #	Description	Height"	Length"	Width"	Price
ES-903625	Triple-Station Unit, elementary sitting height	25	90	36	
ES-903627	Triple-Station Unit, intermediate height	27	90	36	
ES-903629	Triple-Station Unit, adult sitting height	29	90	36	
ES-903639	Triple-Station Unit, stading height	39	90	36	

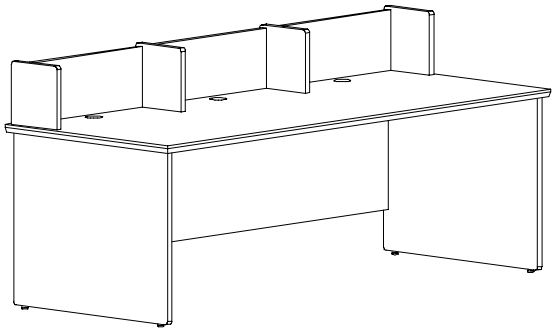

90”L x 36”W Computer Table w/curbing Extended Top

10"H curbing will run the entire width inside the end panels, as well as 10" along each side to aid with wire connection concealment.

Catalog #	Description	Height"	Length"	Width"	Price
ES-903625E	Triple-Station Unit,elementary sitting height	25	90	36	
ES-903627E	Triple-Station Unit,intermediate height	27	90	36	
ES-903629E	Triple-Station Unit, adult sitting height	29	90	36	
ES-903639E	Triple-Station Unit,standing height	39	90	36	

See Page 135 For Edge Details

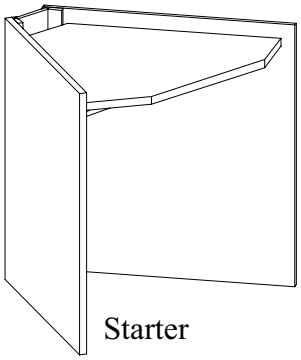

Starter

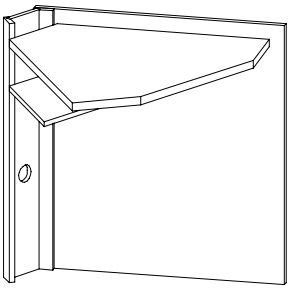

Adder

U-arrange Computer Stations are designed to give you a wide range of arrangement options using the starter-adder design. Note the possibilities below.

Starter and Adder unit shown with optional paper storage shelf.

Starter and Adder unit is also available with an optional paper-feed slot mounted at the rear of the work surface.

To get one of these round configurations, simply order...

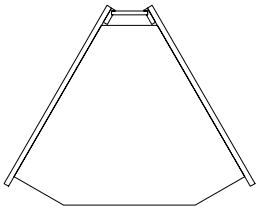

1 Starter

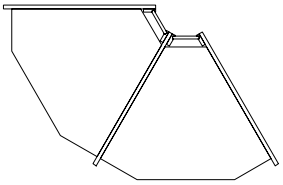

1 Starter - 1 Adder

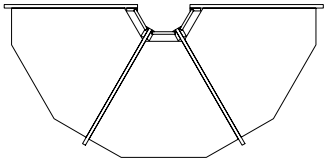

1 Starter - 2 Adders

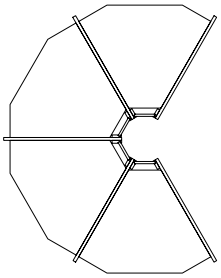

1 Starter - 3 Adders

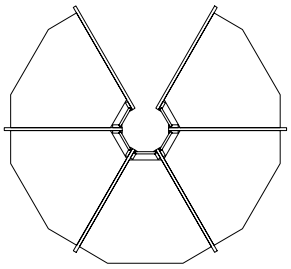

1 Starter - 4 Adders

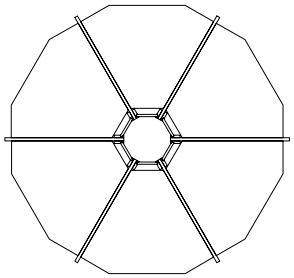

6 Adders

Use these specs to plan and order U-arrange units.

Catalog #	Description	Height"	Width"	Depth"	Price
U-4201	Starter Unit	42	48	38	
U-4201A	Adder Unit	42	48	38	
U-4601	Starter Unit with paper grommet and shelf	46	48	38	
U-4601A	Adder Unit with paper grommet and shelf	46	47	38	
U-4202	Two Positions - one starter and one adder	42	48	48	
U-4203	Three positions - one starter and two adders	42	94	48	
U-4204	Four Positions - one starter and three adders	42	94	88	
U-4205	Five Positions - one starter and four adders	42	94	88	
U-4206	Six Positions - six adders	42	94	94	

See Page 135 For Edge Details

To get one of these serpentine configurations, simply order...

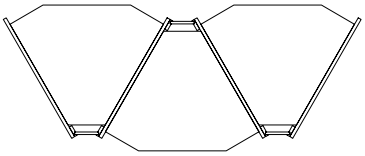

1 Starter - 2 Adders

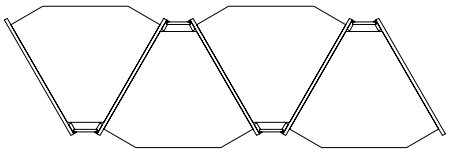

1 Starter - 3 Adders

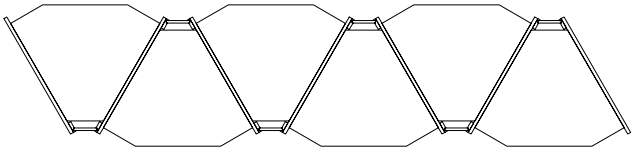

1 Starter - 4 Adders

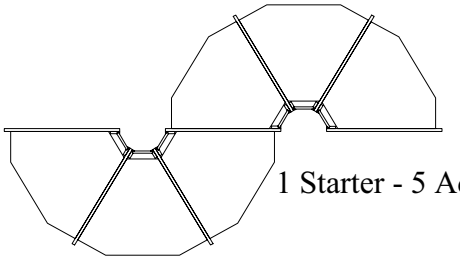

1 Starter - 5 Adders

Use these specs to plan and order serpentine units.

Catalog #	Description	Height"	Width"	Depth"	Price
U-4201S	Starter Unit	42	48	38	
U-4201AS	Adder Unit	42	48	38	
U-4601S	Starter Unit with paper grommet and shelf	46	48	38	
U-4601AS	Adder Unit with paper grommet and shelf	46	47	38	
U-4203S	Serpentine, three units	42	106	44	
U-4204S	Serpentine, four units	42	154	44	
U-4205S	Serpentine, five units	42	152	44	
U-4206B	Serpentine, six units	42	212	94	

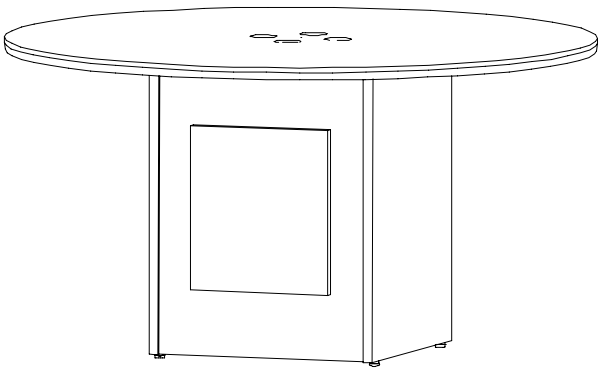

Four Person Walk-up Computer Station

Each unit is supplied with four 3" grommets in work surface. The top is 60” in diameter. The base assembly is 24"W x 24"D. Base assembly has a 14"W x 16"H wiring access. Door hinges are hidden. Internal bolt locators allow for unit to be bolted to finished floor.

Catalog #	Description	Height"	Width"	Depth"	Price
CF-60R32	Information Access Center, 32" H worksurface	32	60	60	
CF-60R39	Information Access Center, 39" H worksurface	39	60	60	

See Page 135 For Edge Details

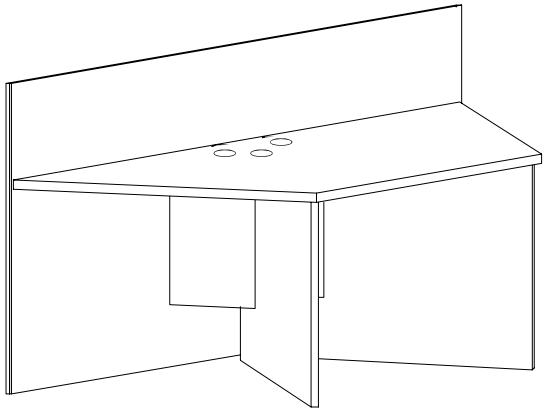

Three Person Sitting Computer Station

Work surface is 29”H. Three grommets are inserted into top and the extended height of the back panel serves to hide wiring. A keyboard tray can be added under the work surface for an additional cost - See Accessories for more details. Overall height is 361/2”.

Catalog #	Description	Height"	Width"	Depth"	Price
H-29H	Half-Hex Station, sitting height	36-1/2	85	37-5/16	

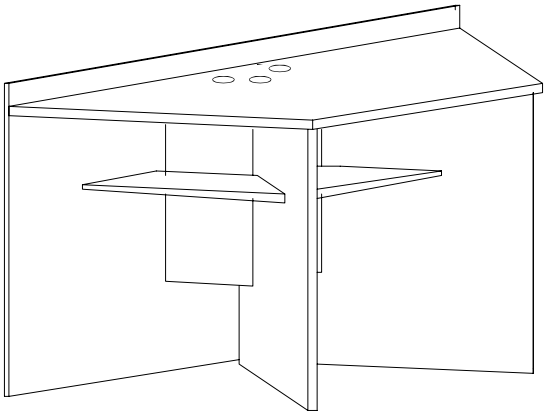

Three Person Walk-up Computer Station

Work surface is 36”H. Three grommets are inserted into top. A 15”D utility shelf and/or a keyboard tray can be added under the work surface for an additional cost - See Accessories for more details.

Catalog #	Description	Height"	Width"	Depth"	Price
H-36H	Half-Hex Station, standing height	36-1/2	85	37-5/16	

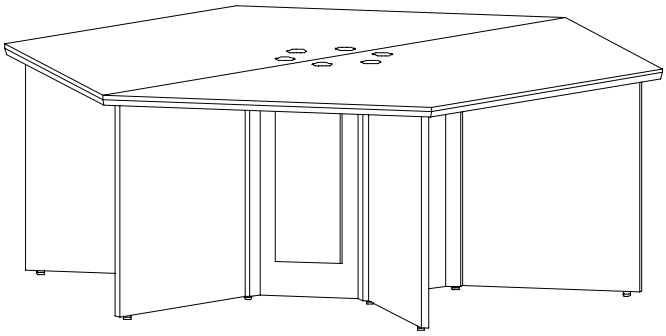

Six Person Sitting Computer Station

This station provides for six computer stations with 6 grommets and a common wire chase in the center of the table. The common wire chase is accessed through a door under one the work stations.

Catalog #	Description	Height"	Width"	Depth"	Price
CF-6P2792	27"H Sitting-height worksurface	27	92	80	
CF-6P2992	29"H Sitting-height worksurface	29	92	80	

See Page 135 For Edge Details

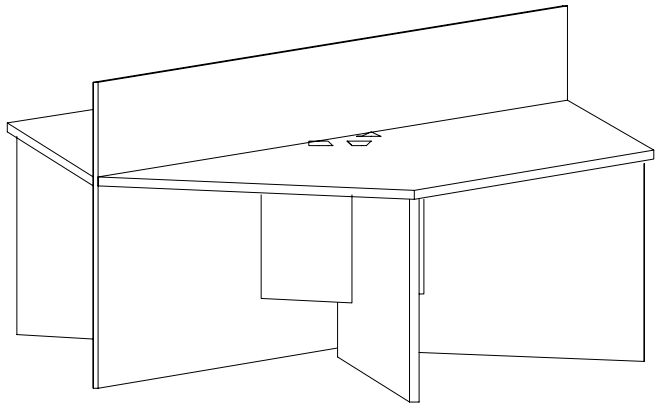

Six Person Sitting Computer Station with center curbing.

Work surface is 29”H. Three grommets on each side are inserted into top. A keyboard tray can be added under the work surface for an additional cost - See Accessories for more details. Overall height is 361/2”.

Catalog #	Description	Height"	Width"	Depth"	Price
H-29F	Full-Hex Station, sitting height	36	85	74	

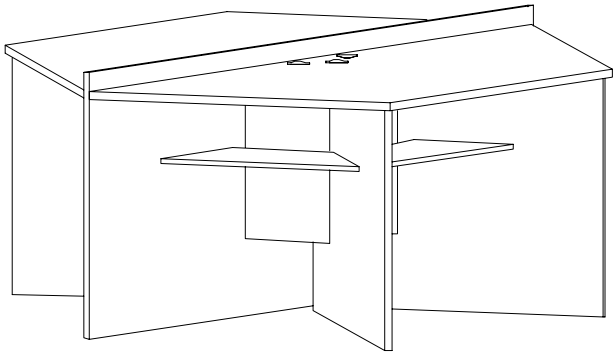

Six Person Walk-up Computer Station

Work surface is 36”H. Three grommets are inserted into the top on both sides to hide wiring. A 15”D utility shelf and/or a keyboard tray can be added under the work surface for an additional cost - See Accessories for more details.

Catalog #	Description	Height"	Width"	Depth"	Price
H-36F	Full-Hex Station, standing height	36	85	74	

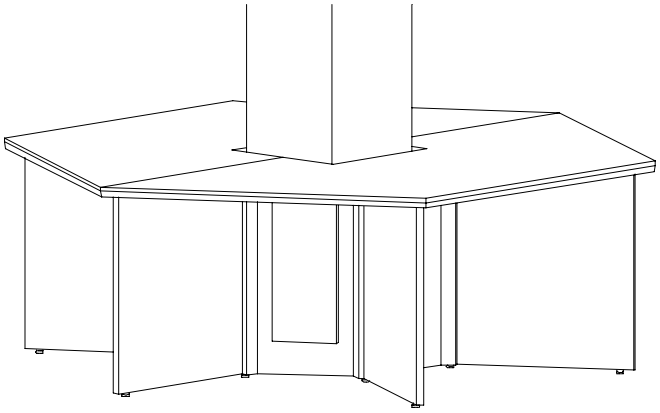

Six Person Sitting Computer Station for columns.

This station provides for six computer stations with a common wire chase in the center of the table. The common wire chase is accessed through a door under one the work stations. This unit can be used to utilize the space around a column for computer stations.

Catalog #	Description	Height"	Width"	Depth"	Price
CF-6P2792A	27"H Sitting-height worksurface	27	92	80	
CF-6P2992A	29"H Sitting-height worksurface	29	92	80	

See Page 135 For Edge Details

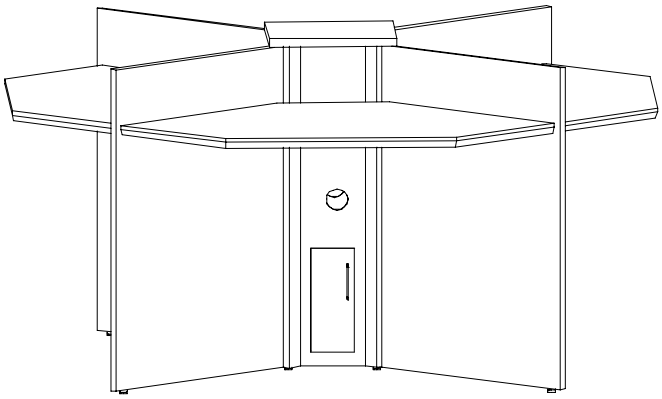

Adjustable Work Surface Computer Station

This unit provides four individual work stations with a common wire chase for all four position. A door under one of the work stations provides access to the wire chase. Work surfaces can be set at 29”, 32”, or 39” in height.

Catalog #	Description	Height"	Width"	Depth"	Price
CF-4P2739	4-position unit	42	84	84	

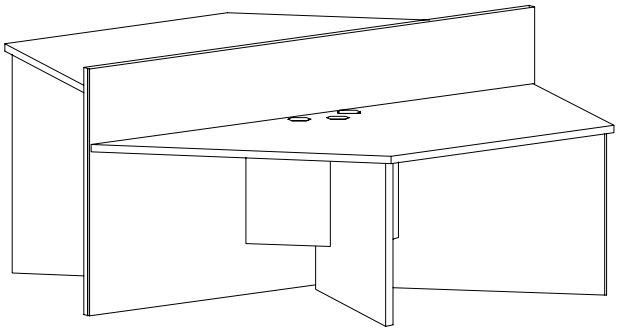

Combo Computer Station

Work surface is 36”H on one side and 29” on the other. Three grommets are inserted into the top on both sides to hide wiring. A 15”D utility shelf and/or a keyboard tray can be added under the work surface for an additional cost - See Accessories for more details.

Catalog #	Description	Height"	Width"	Depth"	Price
H-3629C	Combination-Hex Station	36	85	74	

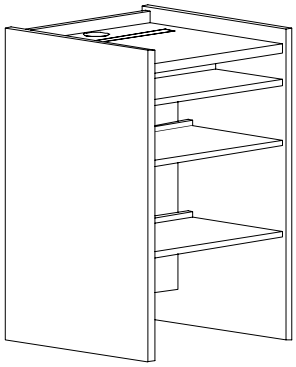

Shown with OPTIONAL CPU shelf, paper shelf, and work surface paper grommet.

Free-Standing Walk-up Computer Station

Each unit is available in 30” OR 24” widths and are supplied with pullout keyboard tray and 3" grommet in work surface.

Catalog #	Description	Height"	Width"	Depth"	Price
CF-2730C	Com Acc Station, 27" H worksurface 30"W	41-1/2	30	24	
CF-2724C	Com Acc Station, 27" H worksurface 24"W	41-1/2	24	24	
CF-2930C	Com Acc Station, 29" H worksurface 30"W	41-1/2	30	24	
CF-2924C	Com Acc Station, 29" H worksurface 24"W	41-1/2	24	24	
CF-3230C	Com Acc Station, 32" H worksurface 30"W	41-1/2	30	24	
CF-3224C	Com Acc Station, 32" H worksurface 24"W	41-1/2	24	24	
CF-3930C	Com Acc Station, 39" H worksurface 30"W	41-1/2	30	24	
CF-3924C	Com Acc Station, 39" H worksurface 24"W	41-1/2	24	24	

See Page 135 For Edge Details

Computer Counter

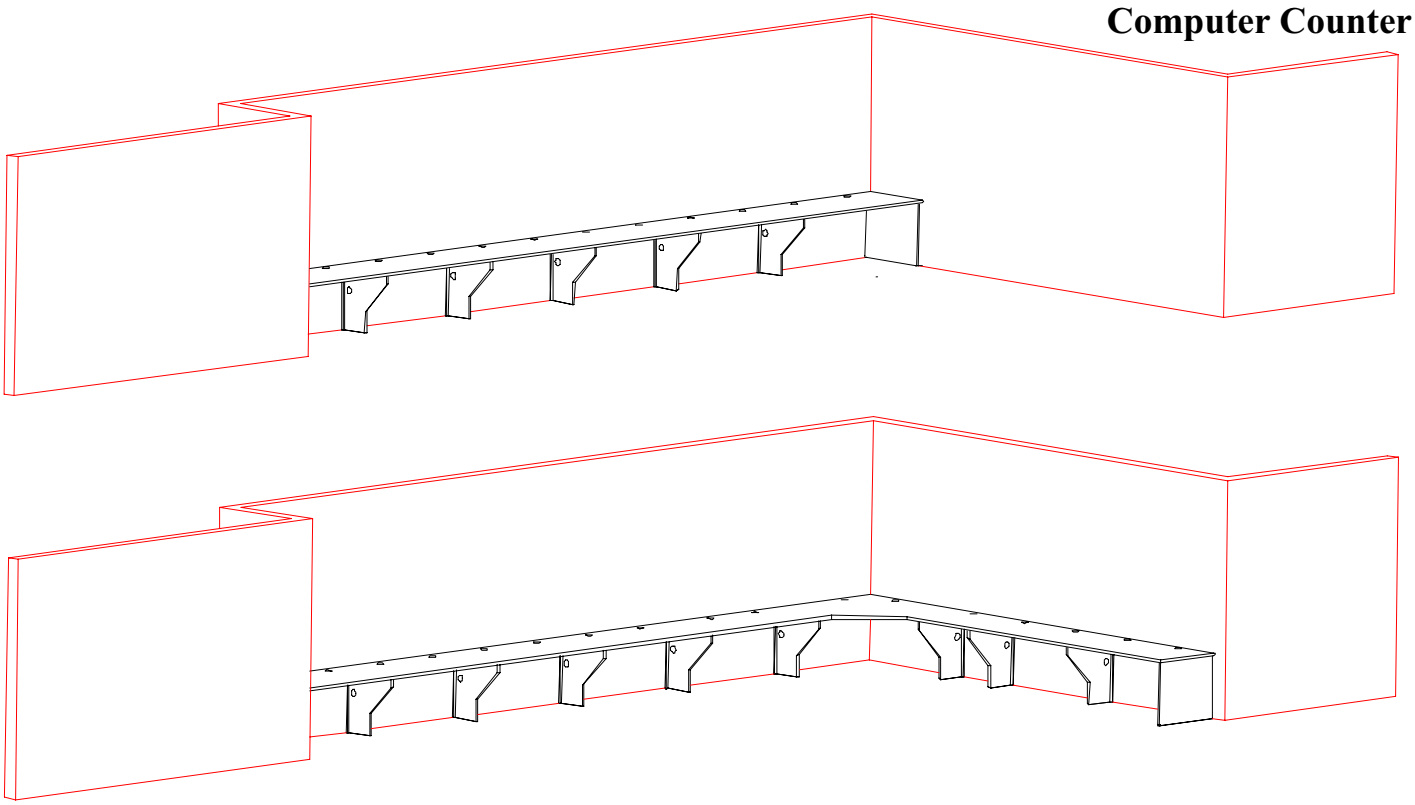

Computer counter work surfaces are 30”D and will be constructed of 1-1/8" thick, 45-pound density particleboard-core with .050" thick high-pressure laminate of the customer’s choosing and .020" thick backer sheet glued to opposite faces for a finished thickness of 1-1/4". (Note: tops can be constructed from 9 or 11-ply lumber core *for an additional charge).* Patron edge of work surface will be banded with 3/4”T solid red oak with edge profile determined by customer selection from edge band chart (pg 135). Patron edge of work surface will be finished to match end panels.

End panels and stiff knees will be 1”T red oak veneer plywood, edgebanded with 1/4”T solid red oak. Two end panels will be provided per run and stiff knees will be spaced a max. of 60” apart. Counter top sections will be a max. of 10ft. in length with each section being biscuited and tight jointed together. Section lengths will be determined to allow a tight joint to fall on a stiff knee. All base panels will have a matching finish. A matching finish red oak veneer plywood wall anchor (4”W x 3/4”T x appropriate lengths) will be provided. Stiff knees are also designed to anchor to the wall. Grommets for each work station will be provided. J-channel wire management in lengths matching each section will be provided. Stiff knees each have a grommet to provide uninterrupted wire management. Corner section will have a “beveled” shape to allow left and right counter sections to be jointed and for chair movement on either side. Corner will also have a grommet in the work surface to allow for printer or server placement. Corner will be 51-3/4” x 51-3/4” with a 30”W access for sitting or printer access.

Edge Detail

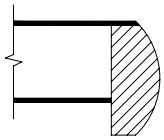

1 1/4” thick top (Internal)
Shallow Bullnose Drop

NOTE: Counter top lengths must be based on actual field measurements - See your Russwood Dealer for questions.

Catalog #	Description	Height"	Width"	Depth	Price
CC-2730	Computer Counter	27	30	N/A	
CC-2751	Computer Counter Corner	27	51-3/4"	51-3/4"	

See Page 135 For Edge Details

Study Carrels - Starter/Adder

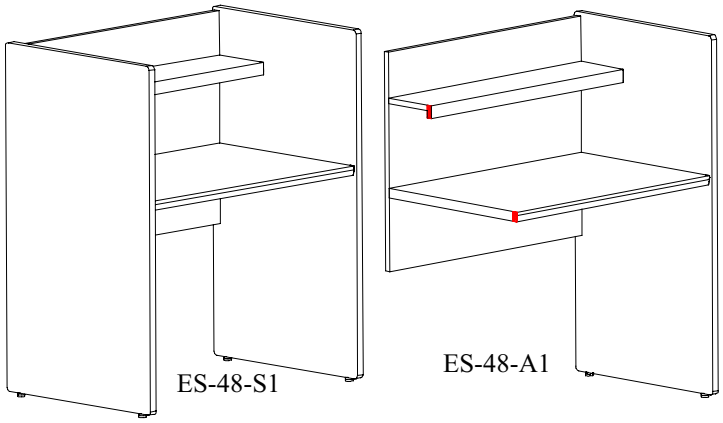

Single Study Carrel (Starter-Adder)

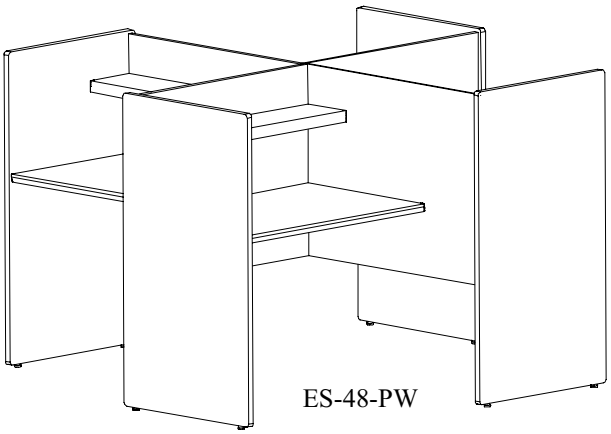

Study Carrel - Pinwheel

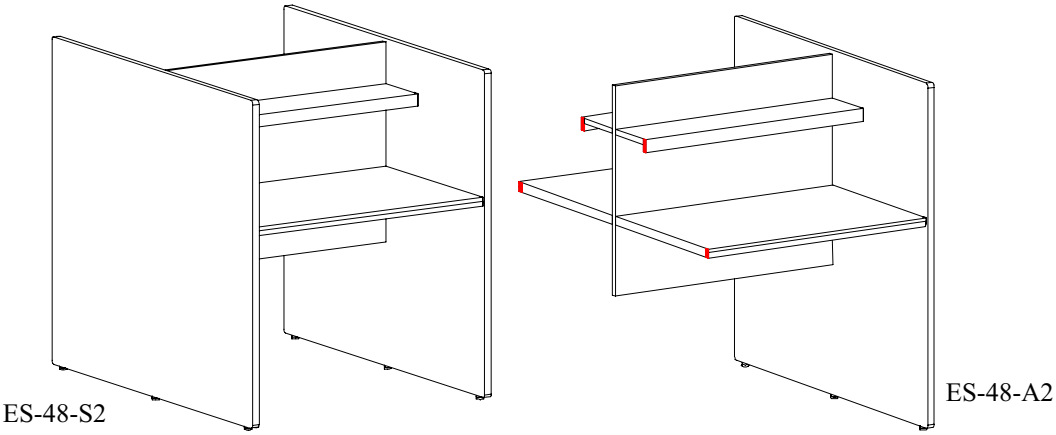

Double Study Carrel (Starter-Adder)

Computer Carrels Next Page

Catalog #	Description	Height"	Width"	Depth"	Price
ES-48S1	Single-Faced,starter	48	39	29	
ES-48A1	Single-Faced, adder	48	38	29	
ES-48S2	Double-Faced, starter	48	39	57	
ES-48A2	Double-Faced, adder	48	38	57	
ES-48PW	Pinwheel Configuration	48	76	76	

"Blessed is the man, who having nothing to say, abstains from giving wordy evidence of the fact."
- George Eliot (1819-1880)

See Page 135 For Edge Details

Computer Carrels - Starter/Adder

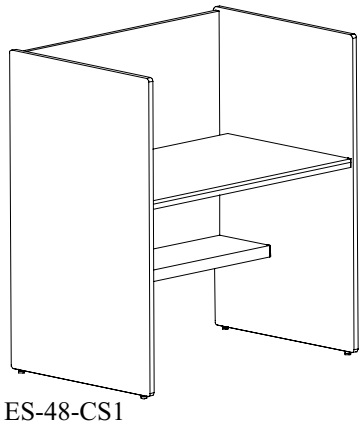

ES-48-CS1

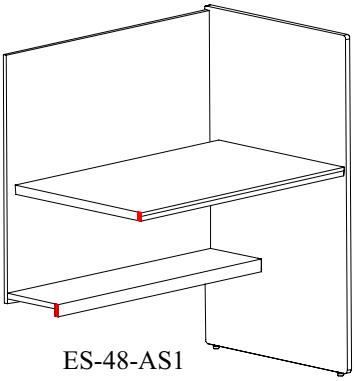

ES-48-AS1

Single Computer Carrel (Starter-Adder)

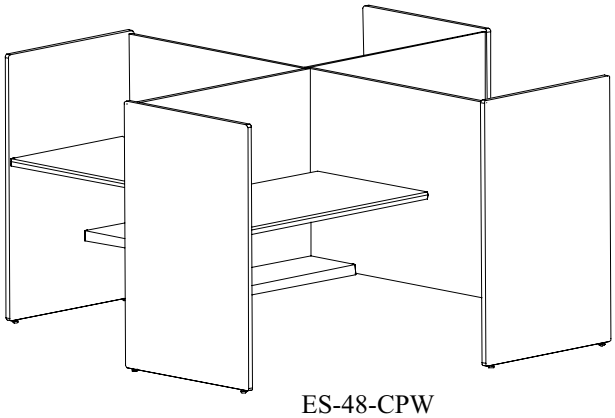

ES-48-CPW

Computer Carrel - Pinwheel

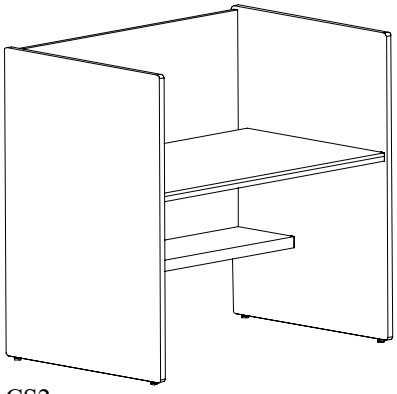

ES-48-CS2

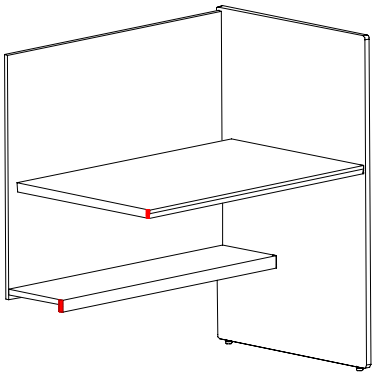

ES-48-CA2

Double Computer Carrel (Starter-Adder)

Catalog #	Description	Height"	Width"	Depth"	Price
ES-30CS1	Single-Faced, starter	48	32	34	
ES-30CA1	Single-Faced, adder	48	31	34	
ES-36CS1	Single-Faced, starter	48	38	34	
ES-36CA1	Single-Faced, adder	48	37	34	
ES-48CS1	Single-Faced, starter	48	49	34	
ES-48CA1	Single-Faced, adder	48	48	34	
ES-30CS2	Double-Faced, starter	48	32	64	
ES-30CA2	Double-faced, adder	48	31	64	
ES-36CS2	Double-Faced, starter	48	38	64	
ES-36CA2	Double-Faced, adder	48	37	64	
ES-48CS2	Double-Faced, starter	48	49	64	
ES-48CA2	Double-Faced, adder	48	48	64	
ES-30CPW	Pinwheel Configuration	48	64	64	
ES-36CPW	Pinwheel Configuration	48	76	76	
ES-48CPW	Pinwheel configuration	48	99	99	

See Page 135 For Edge Details

Atlas Stand

Each unit will have pullout, full-extension shelves on ball bearing glides. Shelves will be 25-3/4"W x 23-7/8"D and will have stops to prevent accidental removal. Adult unit will have 5 shelves with 3" between shelves. Children's unit will have 4 shelves with 2-1/2" between shelves.

Shelves and pullouts are 3/4” veneer red oak plywood with 1/4” red oak edgeband. Shelves are provided with full extension ball bearing glides rated for 200 lbs. A 5/8”x5/8” red oak retainer strip is fastened to the front sloped edge.

Catalog #	Description	Height"	Width"	Depth"	Price
ES-36AT	Elementary height	35	29	27	
ES-42AT	Adult height	42	29	28	

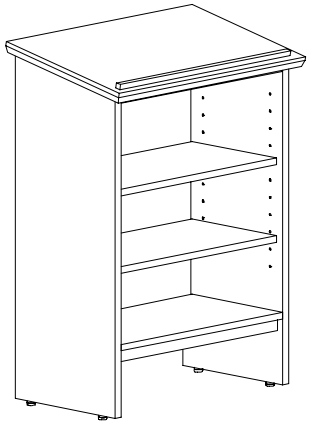

Dictionary Stand

Each unit will have 2 adjustable shelves on 2" centers and 1 fixed base shelf. A 5/8” x 5/8” red oak retainer strip is fastened to the front sloped edge.

Catalog #	Description	Height"	Width"	Depth"	Price
ES-36DS	Elementary height	35	29	18	
ES-43DS	Adult height	43	29	18	

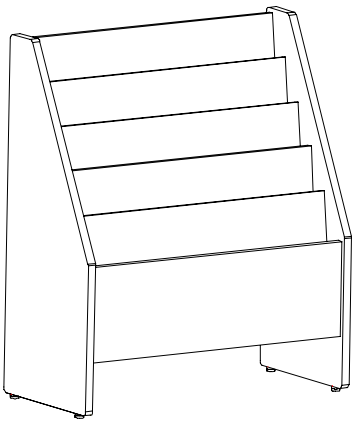

Magazine Rack

Each unit will have 5 sloping display pockets formed by 3/4"T, edge banded plywood dividers. Each display pocket will have a closed veneer plywood wood bottom. The back side will have a shelf and will be finished to allow for storage of back issues.

Catalog #	Description	Height"	Width"	Depth"	Price
ES-42MR	Universal height	42	35	17	

See Page 135 For Edge Details

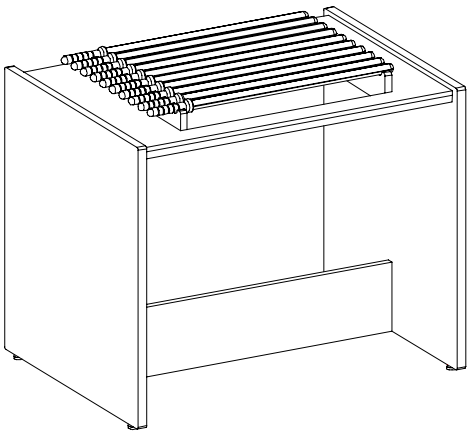

Horizontal Newspaper Rack

Each unit will have an open-top frame. Each newspaper rack is designed to accept 10 solid wood newspaper rods. Newspaper rods are included.

Catalog #	Description	Height"	Length"	Width"	Price
ES-31HR	Universal height	31	36	26	

Map Case Unit

Each unit is a stand-alone piece. Units will have 9 stacked drawers. Each drawer will be mounted on 18" full-extension, ball bearing glides with a load rating of 100 lbs. per pair.

Catalog #	Description	Height"	Width"	Depth"	Price
MC-42	Map Case	42	49	29	

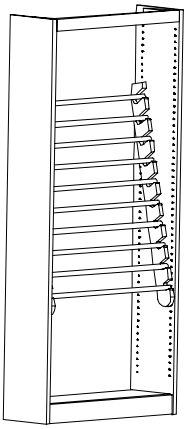

Shelf unit not included.

Newspaper Rod <u>Insert</u> will fit into 10" or 12" deep single-faced shelving, 82", 72" or 60" high. Rod insert will be made of two hardwood cleats, 1-1/4" thick with 1" notched slots for rods. Cleats will be attached to uprights with wood screws.

Rod Insert only is included in pricing.

Catalog #	Description	Insert Height	Rod Length	Cleat Thickness	Price
INS-8260	Newspaper Rod Insert for 82"H Shelf (Holds 10 rods)	45-1/2"	34-7/16	1-1/4"	
INS-6042	Newspaper Rod Insert for 72"H Shelf (Holds 8 rods)	37"	34-7/16	1-1/4"	
INS-4236	Newspaper Rod Insert for 60"H Shelf (Holds 6 rods)	29-1/8"	34-7/16	1-1/4"	

See Page 135 For Edge Details

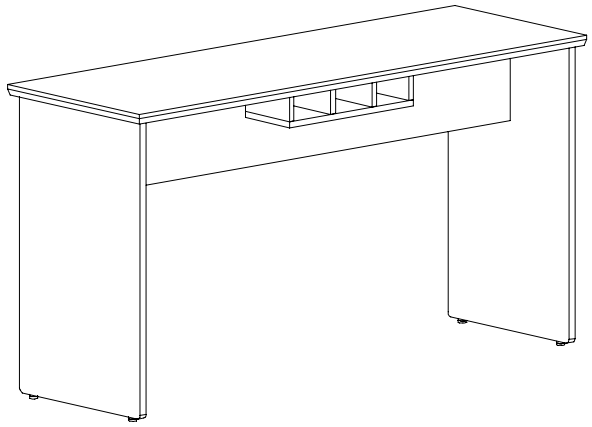

Consultation Table

A three-compartment call-slip rack for 3" x 5" slips will be attached underneath the table.

Catalog #	Description	Height"	Length"	Width"	Price
ES-72CT	Consultation Table	39	72	24	

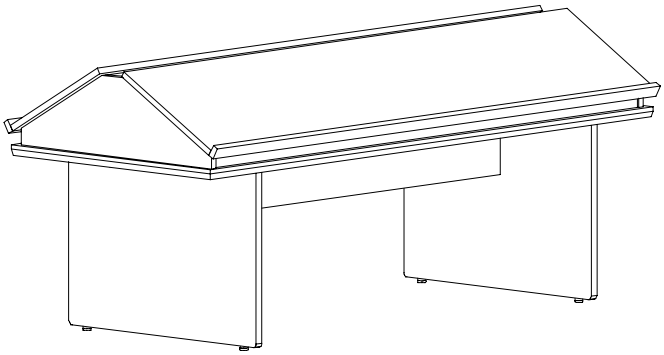

Picture-Book Table

The table will consist of two 78"L x 15-3/4"W x 7/8"T tops mounted at a 30 degree angle. A 5/8" square retaining strip will be mounted on the lower edge of each top. A space of 3" will be provided between the tops to allow a full-length book well.

Catalog #	Description	Height"	Length"	Width"	Price
ES-62PT	62"L Picture-Book Table	34	62	31	
ES-78PT	78"L Picture-Book Table	34	78	31	

What sculpture is to a block of marble, education is to a human soul. Joseph Addison

See Page 135 For Edge Details

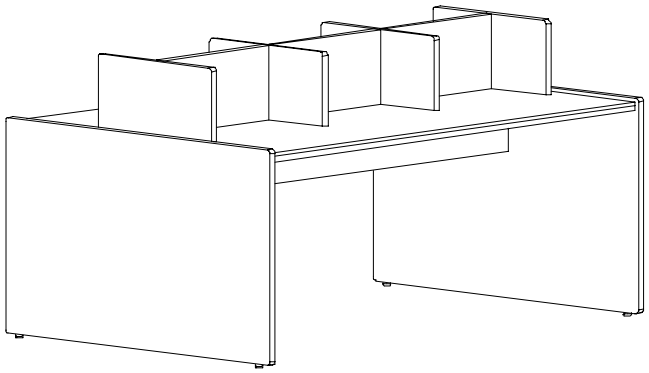

72”L Index Table

The single tier shelving superstructure will be 10" high and will have 6 compartments which are 20-1/2" wide. The double tier shelving superstructure will be 24"H and will have 6 compartments which are 20-1/2" wide

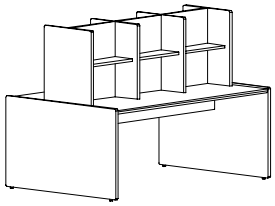

Catalog #	Description	Height"	Length"	Width"	Price
ES-1T72	Single-Tier Double-Faced	39	72	48	
ES-2T72	Double-Tier Double-Faced	53	72	48	

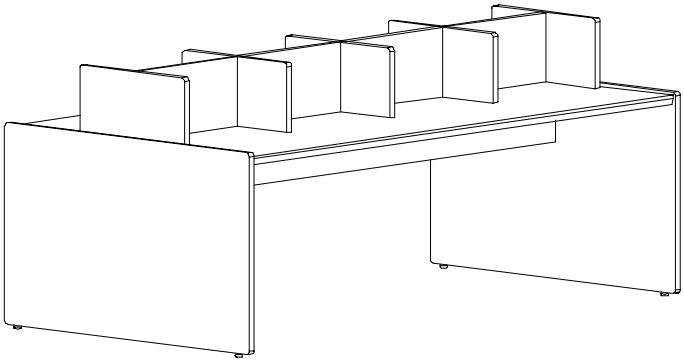

90”L Index Table

The single tier shelving superstructure will be 10" high and will have 8 compartments which are 20-1/2" wide. Double tier shelving superstructure is 24”H and have 8 compartments 20-1/2”W.

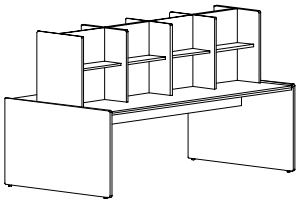

Catalog #	Description	Height"	Length"	Width"	Price
ES-1T90	Single-Tier Double-Faced	39	90	48	
ES-2T90	Double-Tier Double-Faced	53	90	48	

See Page 135 For Edge Details

GENERAL SPECIFICATIONS
Shelving will be modular construction using the starter and adder design. Adder sections are designed to fasten to the uprights of both the starter section and other adders. Heights and depths will be as specified by catalog numbers and drawings. All sections will be standard width to assure shelf interchange between separate units.

CONSTRUCTION AND MATERIALS
All vertical uprights of shelving will be 1" thick veneer-core plywood "A" grade, plain sliced book-matched red oak. Intermediate panels will be 1" thick veneer core plain sliced red oak. All vertical uprights are banded with 1/4”T solid red oak. *Solid red oak uprights are available for an upcharge. Lumber core uprights are available upon request.*

All shelves will be kiln-dried solid red oak or maple, (no mixed wood) glued up in strips of no less than 3/4”W and no more than 2”W, and free from structural defects.

The starter section will have two vertical uprights and be 37" in total width. Shelf pin holes will be bored on 32mm centers on the inside of each end panel. These holes will be 15/16”D in diameter.

The adder section shall have one vertical upright and will be 36" in total width. Holes shall be bored on 32mm centers on both sides of the Adder panel with the same configuration as end panels.

Shelf pins will be 5/16”D and 1" in length. The smooth end fits inside the pin hole. The flange prevents the shelf pin from being dislodged and reduces shelf pin sagging. The underside of shelves shall be a machined with slots to fit over the threaded end and flange portion of the shelf pins to prevent them from accidentally dislodging.

Top and bottom frames shall be 35" wide by the depth of shelving specified. Top frames shall be constructed of red oak veneer plywood with a cornice board that is 3/4" x 2-3/8" x 35" northern grown solid red oak. The toe board shall be 3/4"T x 4"W x 35"L and attached to the bottom frame using a glued tongue and groove joint. Top and bottom frames shall be attached to the starter end panels with 5/16"-18 x 2-3/4" hex head machine bolts, screwed into internally-externally threaded inserts in the starter end panel. Adder panels shall be joined using 5/16"-18 x 6" hex head machine bolts, washers and 5/16"-18 nuts. Dovetail top and bottom frames are available for an additional charge.

Continuous tops for shelving units will be laminate faced, solid red oak edge banded, 3-ply construction with high density .050" thick high-pressure laminate and .020" thick backer sheet glued to opposite faces for a finished thickness of 1-1/4". These tops will be banded using edge details on page 169 which allows for edge detail coordination. Tops will be fabricated in the longest most practical lengths. All joints will have solid wood biscuits and tight-joint fastened. These continuous tops will be placed on top of and fastened to shelving top frames.

All shelving will be without backs unless otherwise specified. When specified, backs will be matching red oak veneer plywood panels 1/4" thick. Back panels of single-faced shelving will be good one side, and panels of double-faced shelving shall be good two sides. Backs will slide into a groove machined into the uprights.

Mobile Shelving: Double face shelving units up to 48”H may be outfitted with a *Titan Cart*. The Titan Cart is a solid steel welded frame with ball-bearing wheels for safe mobility. See page 177.

FINISH - See page 5 for finish specifications.

Visit our website at ***www.russwood.net***

Wood Shelving Basics

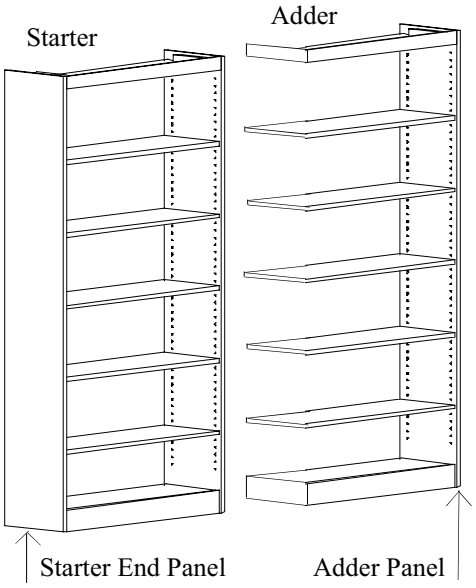

Starters consist of two starter end panels 1” thick, 35”W top and bottom frame assemblies, one base shelf and adjustable shelves. The overall width of starter units is 37”W. *Starters can be used as individual units or in combination with adder units.*

Adders consist of one adder end panel 1” thick, 35”W top and bottom frame assemblies one base shelf and adjustable shelves. The overall width of starter units is 36”W. *Adder unit(s) must be used in conjunction with a starter unit.*

For each run of shelving - one starter unit and the appropriate number of adders should be ordered.

Our top quality solid red oak shelf vs. those that aren’t.

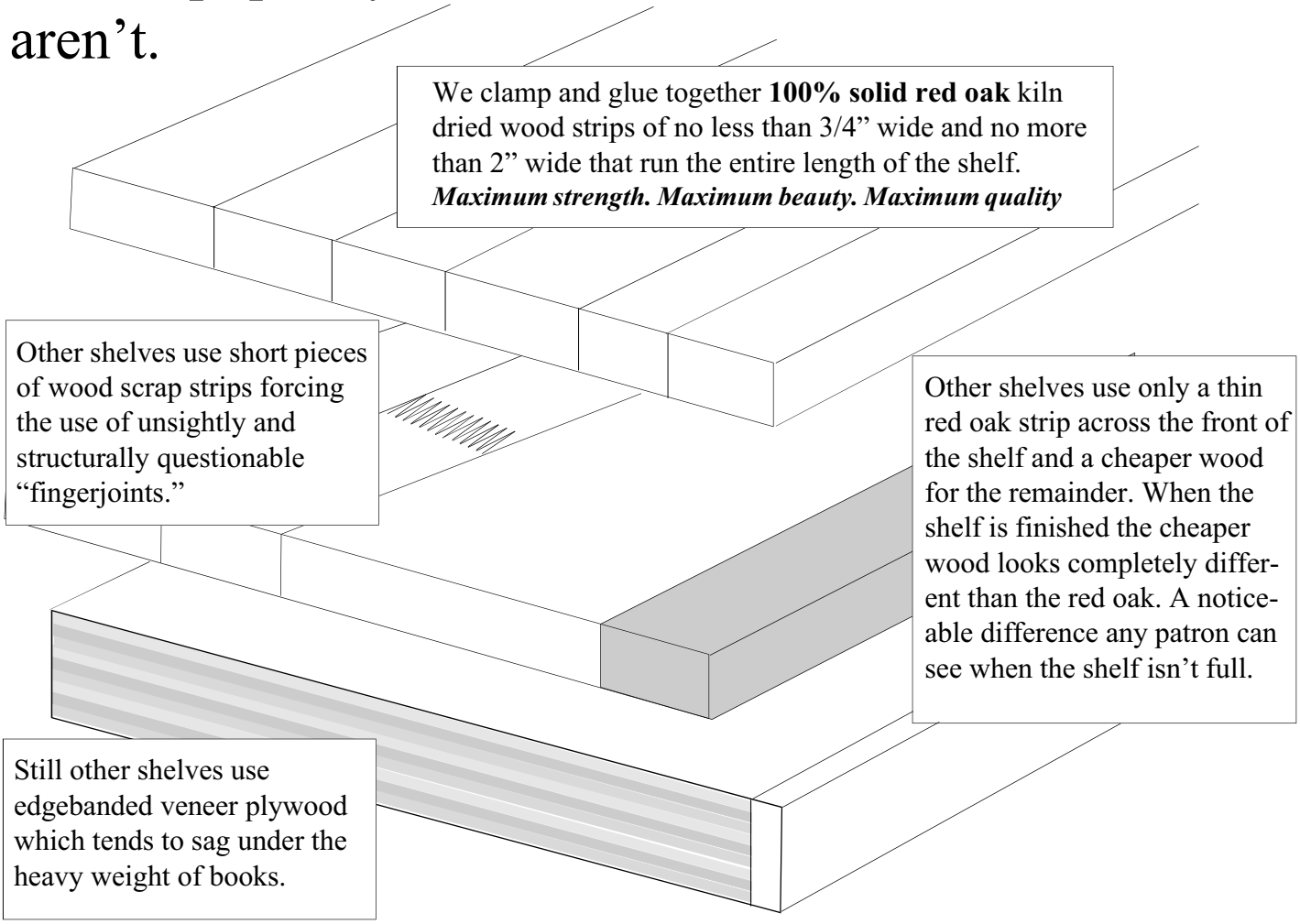

Shelving With Bullnose Edges

All shelving can be constructed with the stylish bullnose edges on uprights and shelving edges. All shelving with this option will be quoted on a per order basis. Listed shelving dimensions and catalog numbers can be used for general planning and quote requests.

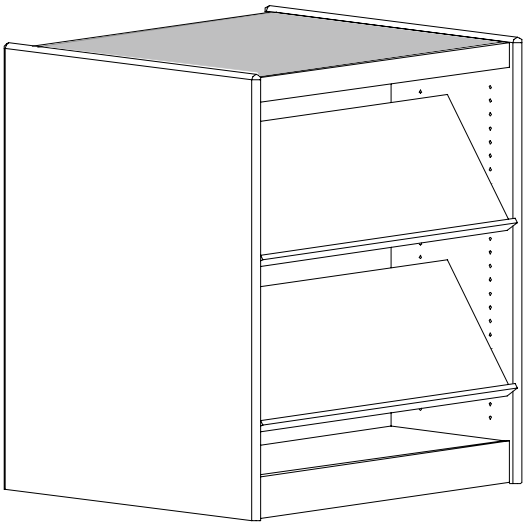

Shown as 42" Double-face Periodical Shelf

Shelving W/ Individual Laminate Top (ILT)

All shelving 60" or less can have an individual laminate top (ILT) of your choice. This option is an additional charge to standard shelving prices. See price list for more information.
To order (ILT) shelving: (1) choose the shelf unit (2) choose the laminate color (3) add the (ILT) upcharge to price listed.
(4) Add the (ILT) suffix to the shelf unit catalog # on your order *specifying laminate color.*

Add (ILT) suffix here

(Catalog # 2FPBS-4212____)

(**2FPBS-4212-ILT**) *i.e. double-face 42" fixed picture book shelf unit with 12"D shelves with a grey ILT)*

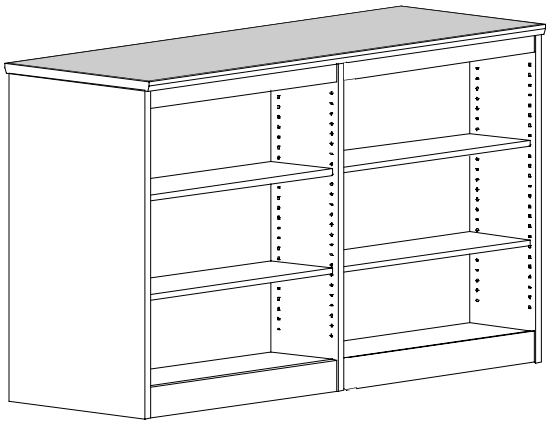

Shown as 48" Double-face - 1 Starter/1 Adder

Shelving With Continuous Laminate Top

All shelving 60" or less is also available in the continuous top construction. Continuous tops are offered in 1-1/4" and 3/4" thicknesses and constructed with the laminate of your choice. Top sections will be constructed in the longest, most practical lengths, sections will be fastened with wood biscuits and tight joint bolts to maximize top continuity.

All continuous top shelving will be quoted on a per order basis. Top thickness, laminate choice and edgeband choice must be included in quote request. ***See next pages for edge details.***

Determing Overall Height of Units with Continous Tops				
Top Thickness	*60"H unit*	*48"H unit*	*42"H unit*	*36"H unit*
1-1/4"	61"	49"	43-1/4"	37"
3/4"	60-1/2"	48-1/2"	42-3/4"	36-1/2"

Planning For & Ordering An Edge Detail For Continuous Top Shelving

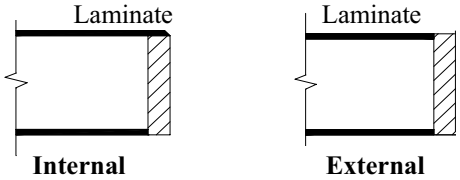

When choosing an edgeband for continuous tops you can either have the edgeband placed internally (the edgeband captured by the laminate) or externally (the laminate captured by the edge band)

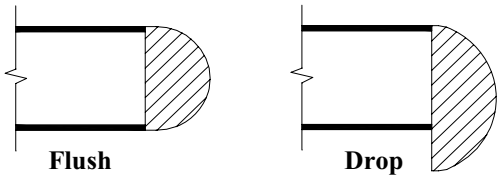

When choosing an edgeband for continuous tops you can either have the edgeband placed flush with the bottom of the top or dropped below the bottom.

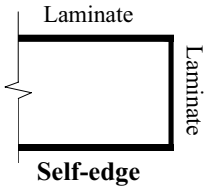

When choosing an edgeband for continuous tops you can have a laminate edgeband matching the laminate top (self-edge). All edges and corners are finished for maximum "bump" protection.

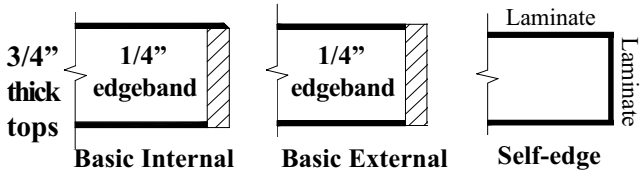

3/4" thick continuous tops are only offered with a BASIC 1/4"T solid wood internal or eternal edgeband or the matching laminate (self-edge.)

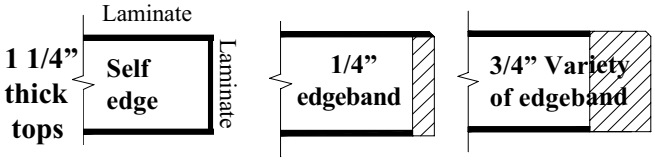

1-1/4" thick continuous tops can be constructed with a laminated self edge OR 1/4"T Internal BASIC solid wood edgeband OR 3/4"T solid wood with a variety of internal or external edgeband details.

Add suffix here

(Catalog # 2SS-6024_____)

(2SS-6024 **CT07**) *i.e. double-face 60" shelf unit with a continuous top with a flush shallow bullnose internal edgeband)*

Important planning and ordering note: When ordering the continuous top option you must include one of the appropriate edgeband suffixes* on the following page with the shelving catalog # to indicate the options that you desire.

Edgeband suffix* → **CT07**

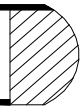

Important planning and ordering note: The edgeband suffix* you choose also determines the thickness of the top and whether the edgeband is flush or drop and placed internally or externally.

Edgeband suffixes and details on following page.

Edgeband Suffixes and Details for Continuous Tops

See the previous two pages for important planning and ordering information of continuous top shelving.

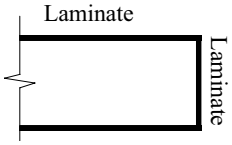

Self Edge
3/4" thick top - CT01
1-1/4" thick top - CT04

3/4" thick top (Internal)
Basic Flush

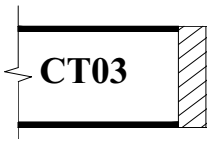

3/4" thick top (External)
Basic Flush External

1 1/4" thick top (Internal)
Basic Flush

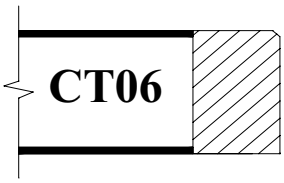

1 1/4" thick top (External)
Montana Flush

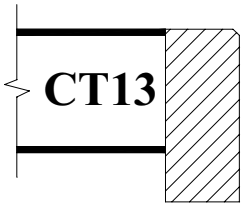

1 1/4" thick top (External)
Montana Drop

1 1/4" thick top (Internal)
Shallow Bullnose Flush

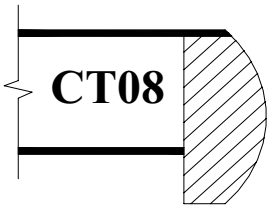

1 1/4" thick top (Internal)
Shallow Bullnose Drop

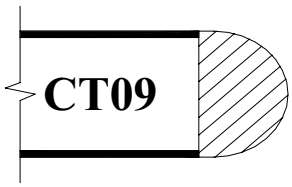

1 1/4" thick top (External)
Bullnose Flush

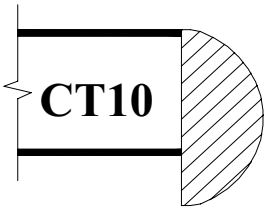

1 1/4" thick top (External)
Bullnose Drop

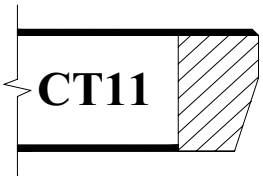

1 1/4" thick top (Internal)
Premier Flush

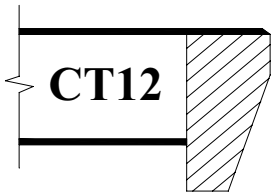

1 1/4" thick top (Internal)
Premier Drop

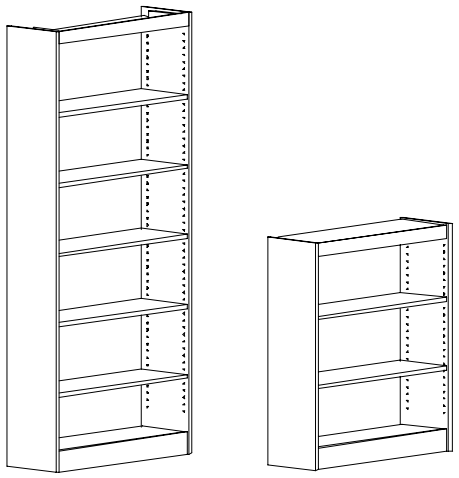

Shown 82” and 42”

Standard Single-Faced Shelving

See previous section “Shelving Basics” for important planning and ordering information for Individual Laminate Top Shelving and Continuous Top Shelving options.

ILT upcharge: Single-face top frames $49.00 per unit.
Bullnose upcharge: 5% of Shelving List Prices

***NC State Contract orders of 60”H - 72”H - 82”H shelf units will receive 1 additional shelf per unit.**

Catalog #	Description	# Adj. Shelves	Unit Depth	Unit Width	Price
Prices do not include backs - see page 176 for details and pricing on backs.					
1SS-8210	82"H Starter Veneer Top	5*	10"	37"	
1SA-8210	82"H Adder Veneer Top	5*	10"	36"	
1SS-8212	82"H Starter Veneer Top	5*	12"	37"	
1SA-8212	82"H Adder Veneer Top	5*	12"	36"	
1SS-7210	72"H Starter Veneer Top	4*	10"	37"	
1SA-7210	72"H Adder Veneer Top	4*	10"	36"	
1SS-7212	72"H Starter Veneer Top	4*	12"	37"	
1SA-7212	72"H Adder Veneer Top	4*	12"	36"	
1SS-6010	60"H Starter Veneer Top	3*	10"	37"	
1SA-6010	60"H Adder Veneer Top	3*	10"	36"	
1SS-6012	60"H Starter Veneer Top	3*	12"	37"	
1SA-6012	60"H Adder Veneer Top	3*	12"	36"	
1SS-4810	48" H Starter Veneer Top	2	10"	37"	
1SA-4810	48"H Adder Veneer Top	2	10"	36"	
1SS-4812	48"H Starter Veneer Top	2	12"	37"	
1SA-4812	48"H Adder Veneer Top	2	12"	36"	
1SS-4210	42"H Starter Veneer Top	2	10"	37"	
1SA-4210	42"H Adder Veneer Top	2	10"	36"	
1SS-4212	42"H Starter Veneer Top	2	12"	37"	
1SA-4212	42"H Adder Veneer Top	2	12"	36"	
1SS-3610	36"H Starter Veneer Top	1	10"	37"	
1SA-3610	36"H Adder Veneer Top	1	10"	36"	
1SS-3612	36"H Starter Veneer Top	1	12"	37"	
1SA-3612	36"H Adder Veneer Top	1	12"	36"	

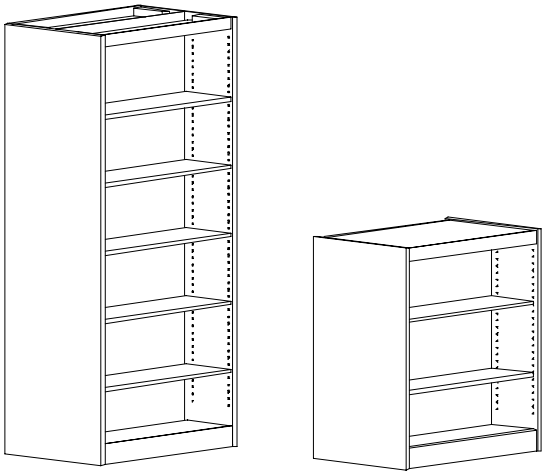

Shown 82” and 42”

Standard Double-Faced Shelving

See previous section “Wood Shelving Basics” for important planning and ordering information for Individual Laminate Top Shelving and Continuous Top Shelving options.

ILT upcharge: Double-face top frames $105 per unit.
Bullnose upcharge: 5% of Shelving List Prices

Mobile Shelving: See the page 177 for details on the TITON Cart for Double-Faced shelving which allows you to safely roll any single section of 36” to 48” shelving where you need it.

***NC State Contract orders of 60”H - 72”H - 82”H shelf units will receive 2 additional shelves per unit.**

Catalog #	Description	# Adj. Shelves	Unit Depth	Unit Width	Price
Prices do not include partitions - see page 176 for details and pricing on paritions.					
2SS-8220	82"H Starter Veneer Top	10*	19 3/4"	37"	
2SA-8220	82"H Adder Veneer Top	10*	19 3/4"	36"	
2SS-8224	82"H Starter Veneer Top	10*	23 3/4"	37"	
2SA-8224	82"H Adder Veneer Top	10*	23 3/4"	36"	
2SS-7220	72"H Starter Veneer Top	8*	19 3/4"	37"	
2SA-7220	72"H Adder Veneer Top	8*	19 3/4"	36"	
2SS-7224	72"H Starter Veneer Top	8*	23 3/4"	37"	
2SA-7224	72"H Adder Veneer Top	8*	23 3/4"	36"	
2SS-6020	60"H Starter Veneer Top	6*	19 3/4"	37"	
2SA-6020	60"H Adder Veneer Top	6*	19 3/4"	36"	
2SS-6024	60"H Starter Veneer Top	6*	23 3/4"	37"	
2SA-6024	60"H Adder Veneer Top	6*	23 3/4"	36"	
2SS-4820	48" H Starter Veneer Top	4	19 3/4"	37"	
2SA-4820	48"H Adder Veneer Top	4	19 3/4"	36"	
2SS-4824	48"H Starter Veneer Top	4	23 3/4"	37"	
2SA-4824	48"H Adder Veneer Top	4	23 3/4"	36"	
2SS-4220	42"H Starter Veneer Top	4	19 3/4"	37"	
2SA-4220	42"H Adder Veneer Top	4	19 3/4"	36"	
2SS-4224	42"H Starter Veneer Top	4	23 3/4"	37"	
2SA-4224	42"H Adder Veneer Top	4	23 3/4"	36"	
2SS-3620	36"H Starter Veneer Top	2	19 3/4"	37"	
2SA-3620	36"H Adder Veneer Top	2	19 3/4"	36"	
2SS-3624	36"H Starter Veneer Top	2	23 3/4"	37"	
2SA-3624	36"H Adder Veneer Top	2	23 3/4"	36"	

SEE PAGE 177 FOR INFORMATION ON MAKING DOUBLE-FACE SHELVING MOBILE

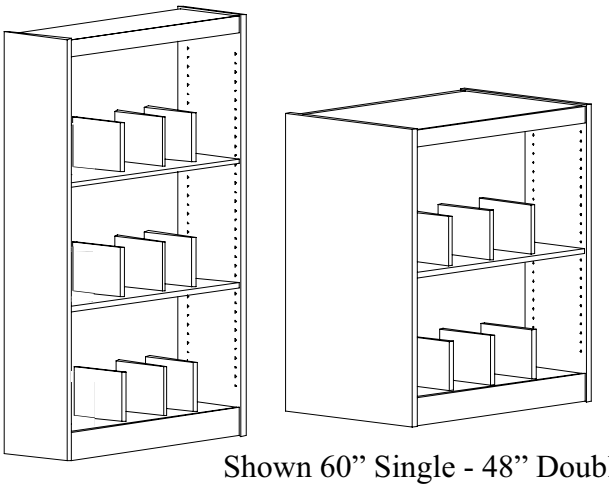

Shown 60” Single - 48” Double

Fixed-Divider Picture Book Shelving

See previous section “Shelving Basics” for important planning & ordering information for Individual Laminate Top Shelving and Continuous Top Shelving options.

ILT upcharge: Single-face top frames $49.00 per unit.
Double-face top frames $105 per unit.
Bullnose upcharge: 5% of Shelving List Prices

Each shelf will have 3 fixed dividers fastened equidistant along shelf length.

Mobile Shelving: See the page 177 for details on the TITON Cart for Double-Faced shelving which allows you to safely roll any single section of 36”H to 48”H shelving where you need it.

Catalog #	Description	# Shelves	Unit Depth	Unit Width	Price
Prices do not include backs or partitions - see page 176 for details and pricing on backs and partitions.					
1FPBS-6012	60"H Single Starter Veneer Top	2 Adj. - 1 Fixed	12"	37"	
1FPBA-6012	60"H Single Adder Veneer Top	2 Adj. - 1 Fixed	12"	36"	
2FPBS-6024	60"H Double Starter Veneer Top	4 Adj. - 2 Fixed	23-3/4"	37"	
2FPBA-6024	60"H Double Adder Veneer Top	4 Adj. - 2 Fixed	23-3/4"	36"	
1FPBS-4812	48"H Single Starter Veneer Top	1 Adj. - 1 Fixed	12"	37"	
1FPBA-4812	48"H Single Adder Veneer Top	1 Adj. - 1 Fixed	12"	36"	
2FPBS-4824	48"H Double Starter Veneer Top	1 Adj. - 1 Fixed	23-3/4"	37"	
2FPBA-4824	48"H Double Adder Veneer Top	1 Adj. - 1 Fixed	23-3/4"	36"	
1FPBS-4212	42"H Single Starter Veneer Top	1 Adj. - 1 Fixed	12"	37"	
1FPBA-4212	42"H Single Adder Veneer Top	1 Adj. - 1 Fixed	12"	36"	
2FPBS-4224	42"H Double Starter Veneer Top	1 Adj. - 1 Fixed	23-3/4"	37"	
2FPBA-4224	42"H Double Adder Veneer Top	1 Adj. - 1 Fixed	23-3/4"	36"	
1FPBS-3612	36"H Single Starter Veneer Top	1 Adj. - 1 Fixed	12"	37"	
1FPBA-3612	36"H Single Adder Veneer Top	1 Adj. - 1 Fixed	12"	36"	
2FPBS-3624	36"H Double Starter Veneer Top	1 Adj. - 1 Fixed	23-3/4"	37"	
2FPBA-3624	36"H Double Adder Veneer Top	1 Adj. - 1 Fixed	23-3/4"	36"	

“THE SIGNIFICANT PROBLEMS WE FACE CANNOT BE SOLVED AT THE

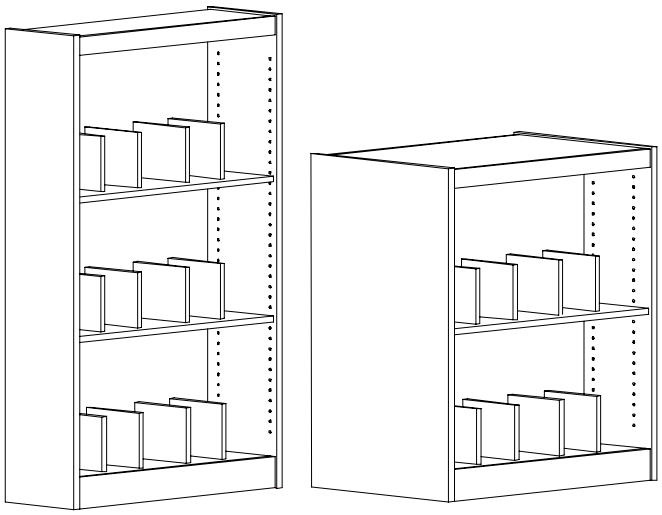

Shown 60” Single - 48” Double

Adjustable Divider Picture Book Shelving

See previous section “Shelving Basics” for important planning & ordering information for Individual Laminate Top Shelving and Continuous Top Shelving options.

ILT upcharge: Single-face top frames $49.00 per unit.
Double-face top frames $105 per unit.
Bullnose upcharge: 5% of Shelving List Prices

Each shelf will have 3 dividers that adjust on 1/2” centers along shelf length.

Mobile Shelving: See the last page of this section for details on the TITON Cart for Double-Faced shelving which allows you to safely roll any single section of 36”H to 48”H shelving where you need it.

Catalog #	Description	# Shelves	Unit Depth	Unit Width	Price
Prices do not include backs or partitions - see page 176 for details and pricing on backs and partitions.					
1APBS-6012	60"H Single Starter Veneer Top	2 Adj. - 1 Fixed	12"	37"	
1APBA-6012	60"H Single Adder Veneer Top	2 Adj. - 1 Fixed	12"	36"	
2APBS-6024	60"H Double Starter Veneer Top	4 Adj. - 2 Fixed	23-3/4"	37"	
2APBA-6024	60"H Double Adder Veneer Top	4 Adj. - 2 Fixed	23-3/4"	36"	
1APBS-4812	48"H Single Starter Veneer Top	1 Adj. - 1 Fixed	12"	37"	
1APBA-4812	48"H Single Adder Veneer Top	1 Adj. - 1 Fixed	12"	36"	
2APBS-4824	48"H Double Starter Veneer Top	1 Adj. - 1 Fixed	23-3/4"	37"	
2APBA-4824	48"H Double Adder Veneer Top	1 Adj. - 1 Fixed	23-3/4"	36"	
1APBS-4212	42"H Single Starter Veneer Top	1 Adj. - 1 Fixed	12"	37"	
1APBA-4212	42"H Single Adder Veneer Top	1 Adj. - 1 Fixed	12"	36"	
2APBS-4224	42"H Double Starter Veneer Top	1 Adj. - 1 Fixed	23-3/4"	37"	
2APBA-4224	42"H Double Adder Veneer Top	1 Adj. - 1 Fixed	23-3/4"	36"	
1APBS-3612	36"H Single Starter Veneer Top	1 Adj. - 1 Fixed	12"	37"	
1APBA-3612	36"H Single Adder Veneer Top	1 Adj. - 1 Fixed	12"	36"	
2APBS-3624	36"H Double Starter Veneer Top	1 Adj. - 1 Fixed	23-3/4"	37"	
2APBA-3624	36"H Double Adder Veneer Top	1 Adj. - 1 Fixed	23-3/4"	36"	

SAME LEVEL OF THINKING WE WERE AT WHEN WE CREATED THEM.”
ALBERT EINSTEIN (1879-1955)

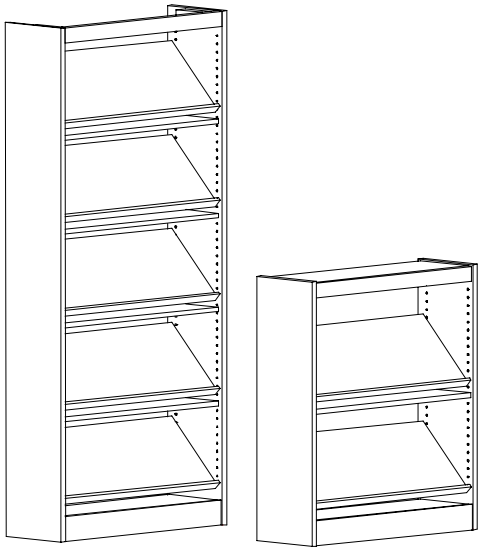

Shown 82” and 42” Single

Periodical Shelving

See previous section “Shelving Basics” for important planning & ordering information for Individual Laminate Top Shelving and Continuous Top Shelving options.

ILT upcharge: Single-face top frames $49.00 per unit.
Double-face top frames $105 per unit.
Bullnose upcharge: 5% of Shelving List Prices

Each shelf will tilt up to allow for back-issue storage underneath on a solid wood shelf.

NOTE: *Prices do not include backs or partitions* . See the last page of this section for prices for backs and partitions.

Catalog #	Description	# Shelves	Depth"	Width"	Price
Prices do not include backs or partitions - see page 176 for details and pricing on backs and partitions.					
1PDS-8212	82"H Single Starter Veneer Top	5 Mag - 4 Adj - 1 Fixed	12"	37"	
1PDA-8212	82"H Single Adder Veneer Top	5 Mag - 4 Adj - 1 Fixed	12"	36"	
2PDS-8224	82"H Double Starter Veneer Top	10 Mag - 8 Adj - 2 Fixed	23-3/4"	37"	
2PDA-8224	82"H Double Adder Veneer Top	10 Mag - 8 Adj - 2 Fixed	23-3/4"	36"	
1PDS-7212	72"H Single Starter Veneer Top	4 Mag - 3 Adj - 1 Fixed	12"	37"	
1PDA-7212	72"H Single Adder Veneer Top	4 Mag - 3 Adj - 1 Fixed	12"	36"	
2PDS-7224	72"H Double Starter Veneer Top	8 Mag - 6 Adj - 2 Fixed	23-3/4"	37"	
2PDA-7224	72"H Double Adder Veneer Top	8 Mag - 6 Adj - 2 Fixed	23-3/4"	36"	
1PDS-6012	60"H Single Starter Veneer Top	3 Mag - 2 Adj - 1 Fixed	12"	37"	
1PDA-6012	60"H Single Adder Veneer Top	3 Mag - 2 Adj - 1 Fixed	12"	36"	
2PDS-6024	60"H Double Starter Veneer Top	6 Mag - 4 Adj - 2 Fixed	23-3/4"	37"	
2PDA-6024	60"H Double Adder Veneer Top	6 Mag - 4 Adj - 2 Fixed	23-3/4"	36"	
1PDS-4812	48"H Single Starter Veneer Top	2 Mag - 1 Adj - 1 Fixed	12"	37"	
1PDA-4812	48"H Single Adder Veneer Top	2 Mag - 1 Adj - 1 Fixed	12"	36"	
2PDS-4824	48"H Double Starter Veneer Top	4 Mag - 2 Adj - 2 Fixed	23-3/4"	37"	
2PDA-4824	48"H Double Adder Veneer Top	4 Mag - 2 Adj - 2 Fixed	23-3/4"	36"	
1PDS-4212	42"H Single Starter Veneer Top	2 Mag - 1 Adj - 1 Fixed	12"	37"	
1PDA-4212	42"H Single Adder Veneer Top	2 Mag - 1 Adj - 1 Fixed	12"	36"	
2PDS-4224	42"H Double Starter Veneer Top	4 Mag - 2 Adj - 2 Fixed	23-3/4"	37"	
2PDA-4224	42"H Double Adder Veneer Top	4 Mag - 2 Adj - 2 Fixed	23-3/4"	36"	
1PDS-3612	36"H Single Starter Veneer Top	1 Mag - 1 Fixed	12"	37"	
1PDA-3612	36"H Single Adder Veneer Top	1 Mag - 1 Fixed	12"	36"	
2PDS-3624	36"H Double Starter Veneer Top	2 Mag - 2 Fixed	23-3/4"	37"	
2PDA-3624	36"H Double Adder Veneer Top	2 Mag - 2 Fixed	23-3/4"	36"	

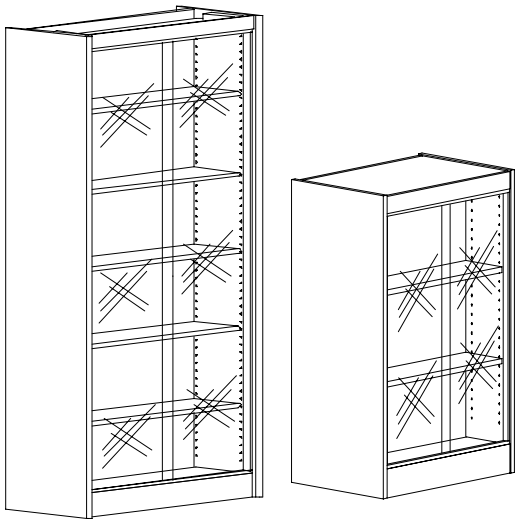

Shown 82” and 48” Single

Glass Door Shelving

See introduction of this section “Shelving Basics” for important planning & ordering information for Individual Laminate Top Shelving and Continuous Top Shelving options.

ILT upcharge: Single-face top frames $49.00 per unit.
Double-face top frames $105 per unit.
Bullnose upcharge: 5% of Shelving List Prices

Each shelf unit will have sliding glass doors, fastened back, 10”D adjustable shelves and key-lock.

NOTE: *Prices do not include backs or partitions. See* the last page of this section for prices for backs and partitions.
.

Catalog #	Description	# Shelves	Unit Depth	Unit Width	Price
Prices do not include backs or partitions - see page 176 for details and pricing on backs and partitions.					
1GS-8212	82"H Single Starter Veneer Top	5 Adj - 1 Fixed	12"	37"	
1GA-8212	82"H Single Adder Veneer Top	5 Adj - 1 Fixed	12"	36"	
1GS-7212	72"H Single Starter Veneer Top	4 Adj - 1 Fixed	12"	37"	
1GA-7212	72"H Single Adder Veneer Top	4 Adj - 1 Fixed	12"	36"	
1GS-6012	60"H Single Starter Veneer Top	3 Adj - 1 Fixed	12"	37"	
1GA-6012	60"H Single Adder Veneer Top	3 Adj - 1 Fixed	12"	36"	
1GS-4812	48"H Single Starter Veneer Top	2 Adj -1 Fixed	12"	37"	
1GA-4812	48"H Single Adder Veneer Top	2 Adj -1 Fixed	12"	36"	
1GS-4212	42"H Single Starter Veneer Top	2 Adj -1 Fixed	12"	37"	
1GA-4212	42"H Single Adder Veneer Top	2 Adj -1 Fixed	12"	36"	

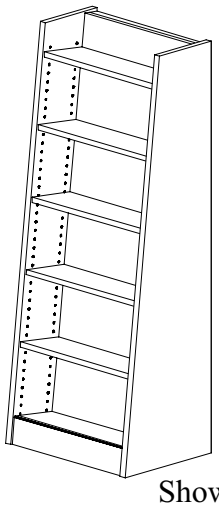

Shown 72”

End of Range Shelf

This unit is 23-3/4”W so as to fit at the end of a run of double faced shelves. Base is 17”D and tapers up for stability. Shelves are 8”D. 72”H unit has 5 adjustable shelves. 60”H unit has 4 adjustable shelves. 42”H unit has 3 adjustable shelves. All heights have a fixed bottom shelf, an open top and include a 1/4”T red oak veneer plywood back.

Catalog #	Description	Height"	Width"	Depth"	Price
1SER-722375	72"H End of Range Shelf	72	23-3/4	17	
1SER-602375	60"H End of Range Shelf	60	23-3/4	17	
1SER-422375	42"H End of Range Shelf	42	23-3/4	17	

Single-Faced Shelving Back Panel

Backs will be "captured" into a continuous rabbet slot on tops, intermediates and end panels and screw-attached to top and bottom to provide greater stability. All backs will be have a matching finish on the interior side of the panel.

Double-Faced Shelving Partition

Partitions will be "captured" into a continuous dado slot on tops, intermediates and end panels and screw-attached to top and bottom to provide greater stability. All backs will be have a matching finish on the interior and exterior sides of the panel.

Catalog #	Description	Price
OVB-82	81"H x 35-11/16" x 1/4" Back Panel	
OVB-72	71"H x 35-11/16" x 1/4" Back Panel	
OVB-60	59"H x 35-11/16" x 1/4" Back Panel	
OVB-48	47"H x 35-11/16" x 1/4" Back Panel	
OVB-42	41"H x 35-11/16" x 1/4" Back Panel	
OVB-36	35"H x 35-11/16" x 1/4" Back Panel	

Catalog #	Description	Price
OVP-82	81"H x 35-11/16" x 1/4" Partition	
OVP-72	71"H x 35-11/16" x 1/4" Partition	
OVP-60	59"H x 35-11/16" x 1/4" Partition	
OVP-48	47"H x 35-11/16" x 1/4" Partition	
OVP-42	41"H x 35-11/16" x 1/4" Partition	
OVP-36	35"H x 35-11/16" x 1/4" Partition	

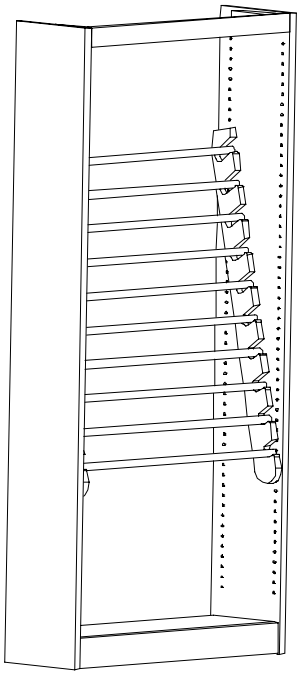

Shelf unit not included.

Newspaper Rod <u>Insert</u> will fit into 10" or 12" deep single-faced shelving, 82", 72" or 60" high. File insert will be made of two hardwood cleats, 1-1/4" thick with 1" notched slots for rods. Cleats will be attached to uprights with wood screws.

Insert only is included in pricing.

Catalog #	Description	Insert Height	Rod Length	Cleat Thickness	Price
INS-8260	Newspaper Rod Insert for 82"H Shelf (Holds 10 rods)	45-1/2"	34-7/16	1-1/4"	
INS-6042	Newspaper Rod Insert for 72"H Shelf (Holds 8 rods)	37"	34-7/16	1-1/4"	
INS-4236	Newspaper Rod Insert for 60"H Shelf (Holds 6 rods)	29-1/8"	34-7/16	1-1/4"	

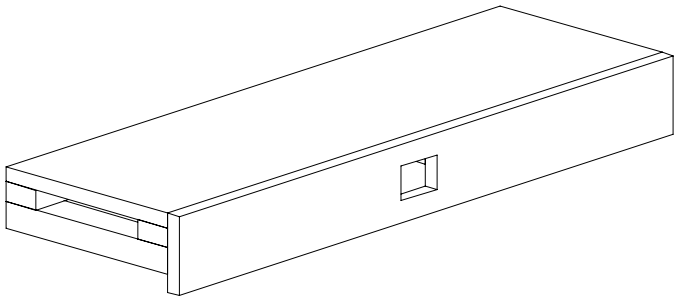

One Electrical Outlet Cutout 12” Bottom Frame

This accessory *replaces* a standard bottom frame and can be used in any of the 12” shelving and provides a cutout for one outlet in the middle of the toe board. Frame can be used with either a Starter or Adder Shelf.

Catalog #	Description	Height	Width	Depth	Price
A-34	One Electrical Outlet Cutout for 12" Bottom Frame	4"	35"	11-1/2"	

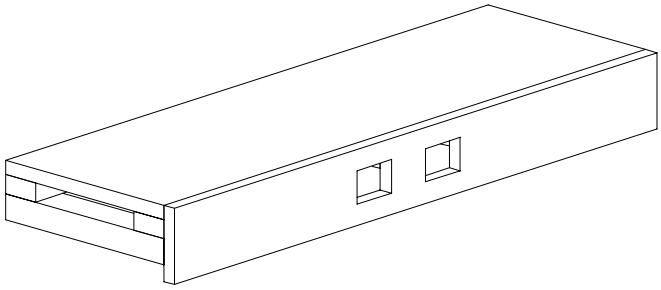

Two Electrical Outlet Cutout 12” Bottom Frame

This accessory *replaces* a standard bottom frame that can be used in any of the 12” shelving and provides cutouts for two outlets in the middle of the toe board. Frame can be used with either a Starter or Adder Shelf.

Catalog #	Description	Height	Width	Depth	Price
A-35	Two Electrical Outlet Cutout for 12" Bottom Frame	4"	35"	11-1/2"	

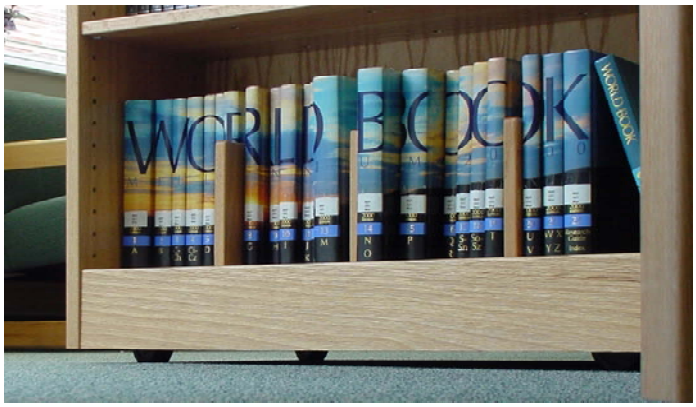

Titan Cart (for standard 12” double-faced shelving)

This accessory *replaces* a standard bottom frame and is available for use with any 36”, 42” or 48” double-faced shelving. Vertical uprights fasten to the cart in the same manner as the solid wood bottom frame. All steel construction with 4 caster swivel wheels can easily hold 400 lbs. of book and shelf weight. A solid red oak kick plate is finished to match shelving and fastened to the steel frame.

ADD TITAN CART PRICING TO INDIVIDUAL SHELF PRICE

Catalog #	Description	Height	Width	Depth	Price
A-36	Titon Cart	5"	35"	23--1/2"	

MAKE DOUBLE FACE SHELVING UP TO 48”H - MOBILE - BY SIMPLY ADDING THE TITAN CART.

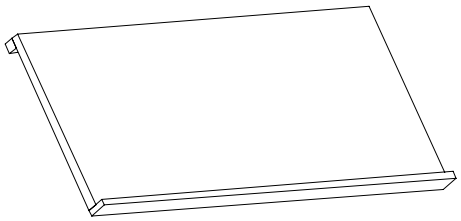

Periodical Shelf

This shelf may be used in conjunction with any standard shelf unit. For back issue storage a flat shelf may also be ordered. Shelf is 3/4”T red oak veneer core plywood with a 1/2”T x 1-1/2”W solid red oak ledger.

Catalog #	Description	Height	Width	Depth	Price
A-42	One Periodical Shelf - flat shelf not included		34-15-16"	13-29/32"	

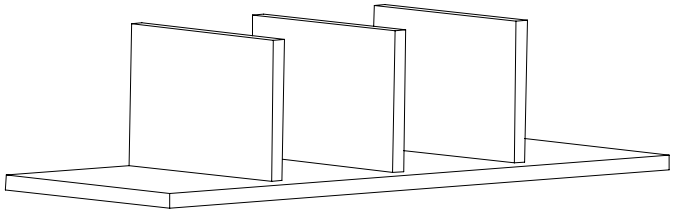

Fixed Picture Book Shelf

This shelf may be used in conjunction with any standard shelf unit. The shelf and dividers will be kiln-dried solid red oak (no mixed wood) glued up in strips of no less than 3/4”W and no more than 2”W, and free from structural defects. Dividers are fastened to shelf with 1-1/2” wood screws. The bottom shelf is 3/4”T red oak veneer core plywood with same solid wood dividers.

Catalog #	Description	Height	Width	Depth	Price
A-43	One Fixed Picture Book Shelf (divider 3/4"T)	7-3/4"	11-1/2"	34-15-16"	
A-43B	One Fixed Picture Book BASE Shelf (divider 3/4"T)	7-3/4"	10-3/4"	34-15-16"	

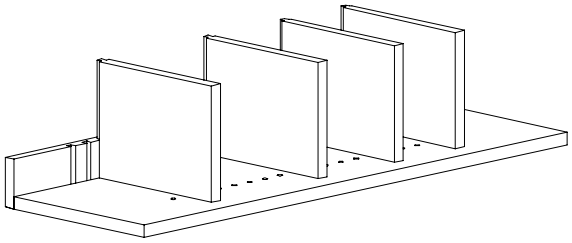

Adjustable Picture Book Shelf

This shelf may be used in conjunction with any standard shelf unit. Both adjustable and base shelf, dividers and adjustment strip will be kiln-dried solid red oak (no mixed wood) glued up in strips of no less than 3/4”W and no more than 2”W, and free from structural defects. The bottom shelf is 3/4”T red oak veneer core plywood with same solid wood dividers.

Catalog #	Description	Height	Width	Depth	Price
A-44	One Adjustable Picture Book Shelf (divider 3/4"T)	7-3/4"	11-1/2"	34-15-16"	
A-44B	One Adjustable Picture Book BASE Shelf (divider 3/4"T)	7-3/4"	10-3/4"	34-15-16"	

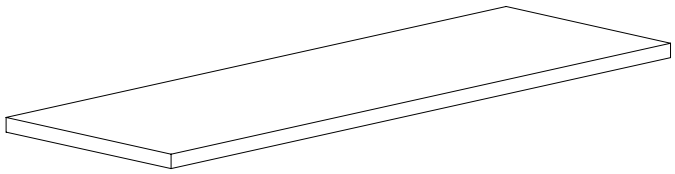

Standard Flat Shelf

This shelf may be used in conjunction with any standard shelf unit. The shelf and dividers will be kiln-dried solid red oak (no mixed wood) glued up in strips of no less than 3/4”W and no more than 2”W, and free from structural defects.

Catalog #	Description	Thickness	Width	Depth	Price
A-45	One Adjustable Flat Shelf for 12"D unit	3/4"	11-1/2"	34-15/16"	
A-45B	One Flat BASE Shelf for 12"D unit	3/4"	11-1/2"	34-15/16"	
A-46	One Adjustable Flat Shelf for 10"D unit	3/4"	9-1/2"	34-15/16"	
A-46B	One Flat BASE Shelf for 10"D unit	3/4"	9-1/2"	34-15/16"	

GENERAL SPECIFICATIONS

Flat and sloped-shelf book trucks will utilize a 1" thick, red oak veneer plywood for load-bearing end panels and 3/4" thick red oak veneer plywood for shelves. End panels will be banded with 1/2" thick red oak. Edges will be radiused 1/8" and corners will be radiused 1/2".

Flat and sloped-shelf units will have on 5" diameter swivel casters. Caster forks are cold-rolled steel, heat treated, and nickel-plated with a per-caster load capacity of 300 lbs. each. Casters are attached with 4-5/16" diameter machine bolts each.

All shelves will be doweled and glued into truck end panels, supported with wooden screw cleats for added strength.

Depressible book trucks will be constructed using 3/4" thick, 7-ply veneer-core plywood. Edges will be banded with 1/4" thick matching hardwood with eased edges. Each truck will be fitted with a high-quality, depressible spring mechanism. Depressible trucks will ride on four (4) 3" ball-bearing swivel casters, rated at 210 lbs. Each caster bolt-attaches with (4) 5/16" diameter machine bolts.

Depressible book trucks are designed to fit within the book return unit of both adult and elementary heights so as to provide full mobility and full removal when book receptacle is full. The appropriate depressible unit is list with each circulation desk series.

Depressible book trucks employ a spring mechanism which allows for the gentle deposit of reading materials by reducing the distance a book must drop once deposited.

Other mobile units will utilize a 1”T oak veneer plywood for load bearing end panels and 3/4”T red oak veneer plywood for all other components. All exposed edges of plywood are banded with 1/4”T red oak. All banded edges will have a 1/4” radius. All uniiys will ride on four (4) 3" ball-bearing swivel casters, rated at 210 lbs. Each caster bolt-attaches with (4) 5/16" diameter machine bolts.

FINISH - See page 5 for finish specifications.

Visit our website at ***www.russwood.net***

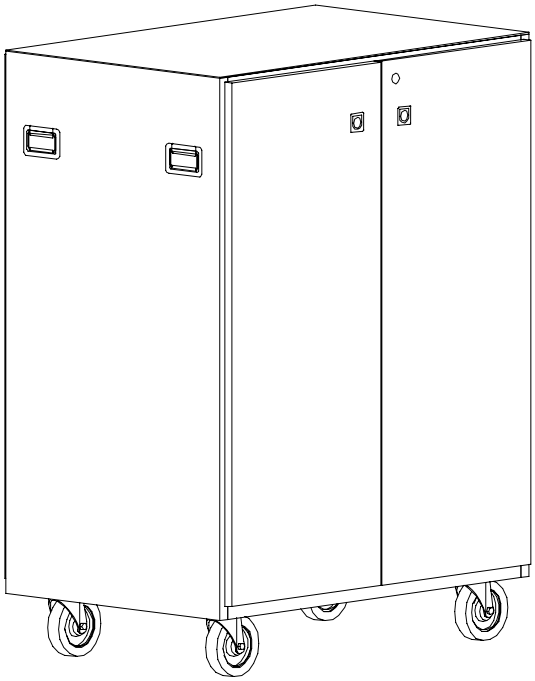

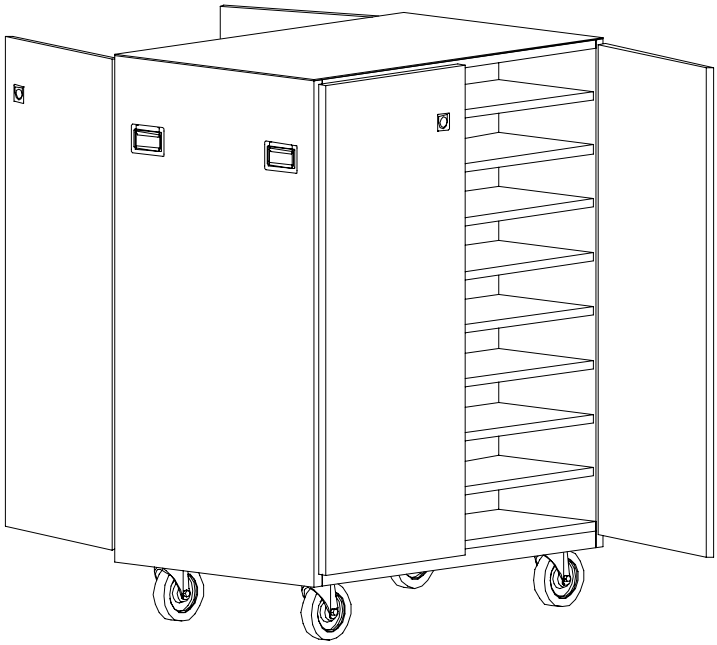

Mobile Laptop Computer Cupboard

This unit will be constructed with 1”T oak veneer plywood end panels. All remaining panels and shelves will be 3/4”T oak veneer plywood. All exposed edges will be banded with 1/4”T solid oak edgeband. Wheels are 5”Dia 300 lbs. rated ball-bearing swivel casters. Cupboard has two equal size doors per side with locks. Top of the unit is covered with matching woodgrain laminate. For ease in handling end panels will have two recessed folding case handles. For door clearance, each door will have one recessed folding case handle.

Each adjustable shelf will be 34-3/4”W x 11-1/2”D x 3/4”T. Unit has 8 adjustable shelves and one base shelf per side and can hold up to 36 laptop computers. (Two computers per shelf) When shelves are spaced equally there will be 4” between shelves.

Catalog #	Description	Height"	Width"	Depth"	Price
A-44	Mobile Laptop Computer Cupboard	50-1/4"	37	25-1/2	

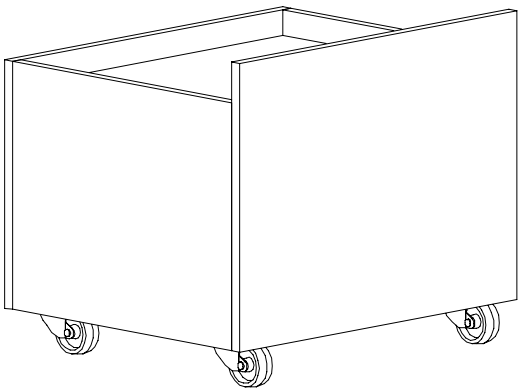

Depressible Book Truck

Each unit will have a depressible platform that will hold approximately 70 books. Each unit will have four 3" swivel casters mounted with 5/16” dia bolts.

Catalog #	Description	Height"	Width"	Depth"	Price
BT-D32	Elementary height	22	26	22	
BT-D39	Adult height	29	26	22	

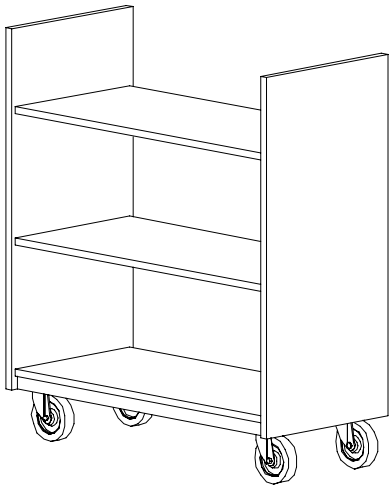

Flat-Shelf Book Truck

Each unit will have shelves that are cleated, glued and screwed into the ends. Additionally, 1" square hardwood cleats will be glued and screwed under each end of both shelves. Trucks will have 13-3/8" clearance between shelves.

Catalog #	Description	Height"	Width"	Depth"	Price
BT-F32	Elementary height	44	33	14	
BT-F39	Adult height	44	39	14	

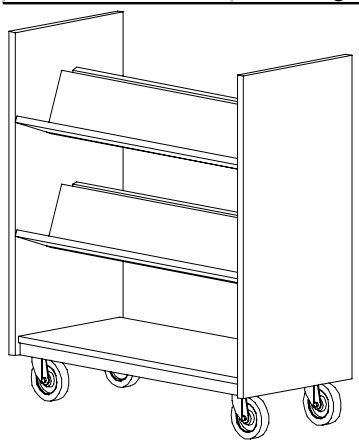

Sloped-Shelf Book Truck

Each unit will have shelves that are cleated, glued and screwed into the ends. Two top shelves will be double faced and sloped. Bottom shelf will be flat. Additionally, 1" square hardwood cleats will be glued and screwed under each end of both shelves. Trucks will have 13-3/8" clearance between shelves.

Catalog #	Description	Height"	Width"	Depth"	Price
BT-S32	Elementary height	44	33	17	
BT-S39	Adult height	44	39	17	

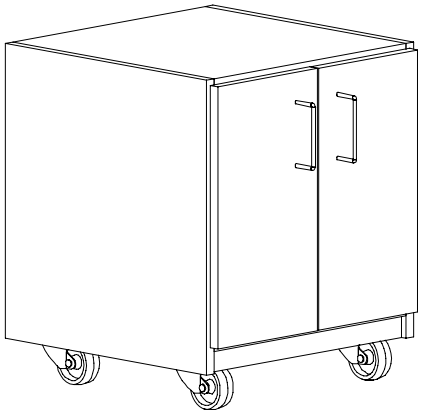

Mobile Cupboard Unit

This unit is supplied with two (2) adjustable shelves for the adult height and one (1) adjustable shelf for the elementary height. The back is supplied with grommets for wire management. Bottom shelf is 23”W x 18”D. Adjustable shelf is 22-3/4”W x 17”D.

Catalog #	Description	Height"	Width"	Depth"	Price
A-27	Elementary height	26	25	19-3/4	
A-28	Adult height	36	25	19-3/4	

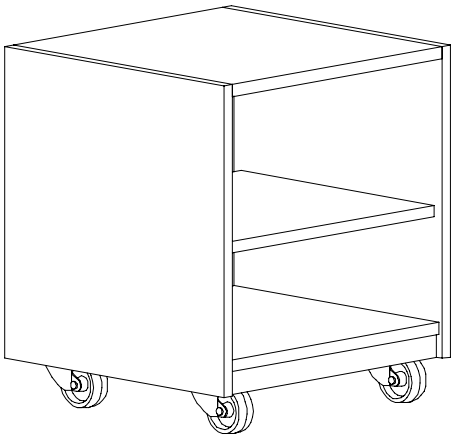

Mobile Open Shelf Unit

This unit is supplied with two (2) adjustable shelves for the adult height and one (1) adjustable shelf for the elementary height. The back is supplied with grommets for wire management. Bottom shelf is 23”W x 18”D. Adjustable shelf is 22-3/4”W x 17”D.

Catalog #	Description	Height"	Width"	Depth"	Price
A-29	Elementary height	26	25	19	
A-30	Adult height	36	25	19	

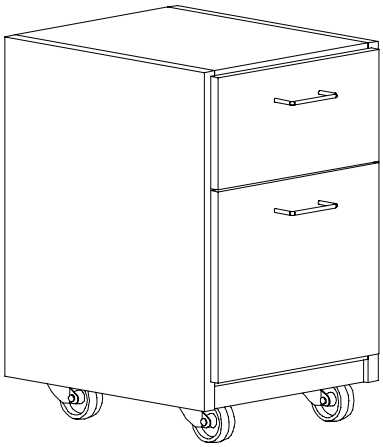

Mobile File Cabinet

The elementary height unit is supplied with (1) box and (1) file drawer. The intermediate height unit is supplied with (2) boxes and (1) file. The adult height unit is supplied with (1) box drawer and (2) file drawers. The box drawer is14-7/8”W x 18”D x 5-1/4”H. The file drawer is 14-7/8”W x 18”D x 10-1/2”H. The unit is counterbalanced so that it does not tip over under normal use when the file drawer is opened.

Catalog #	Description	Height"	Width"	Depth"	Price
A-23	Elementary height	26-1/4	17-7/8	19-1/4	
A-23A	Intermediate height	31	17-7/8	19-1/4	
A-23B	Adult height	36	17-7/8	19-1/4	

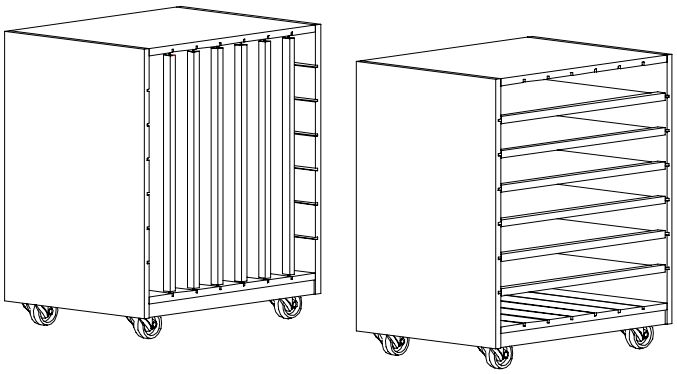

Big Book Truck

The outside of the this book truck unit is doweled and glued together. The top and sides of the unit are slotted so that removable dividers can be place in them vertically or horizontally.

Catalog #	Description	Height"	Width"	Depth"	Price
BT-B32	Elementary height (not available in adult height)	31	27	20	

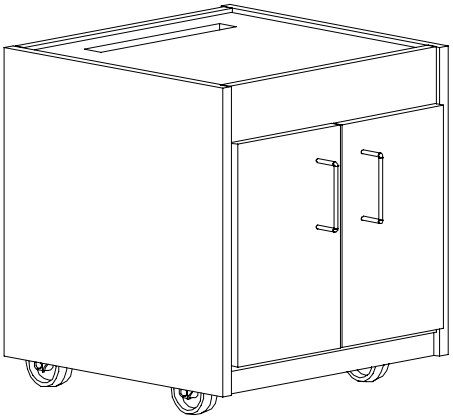

Mobile Printer Stand

Unit end panels are constructed of 1”T oak veneer plywood. All other components are constructed with 3/4”T oak veneer plywood. Unit is supplied with one (1) adjustable shelf and one (1) base shelf. The shelf is 22-134”W x 17”D x 3/4”T. Adj. Shelf is notched for wiring management. All exposed edges are edgebanded with 1/4”T solid oak. Doors have satin chrome pulls. The bottom is supplied with a grommet for wire management. Wheels are 210 lbs rated ball-bearing swivel casters. The top is removable and is slotted for printer paper.

Catalog #	Description	Height"	Width"	Depth"	Price
A-24	Universal height	22-3/4	20-1/2	20-1/8	

“Anyone who stops learning is old, whether at twenty or eighty. Anyone who keeps learning stays young.”
Henry Ford

REGENT TM SERIES
GENERAL SPECIFICATIONS

Desk tops will be constructed of 1-1/8" thick, 45-pound density particleboard-core with .050" thick high-pressure laminate and .020" thick backer sheet glued to opposite faces for a finished thickness of 1-1/4". (Note: Table tops can be constructed from 9 or 11-ply lumber core *for an additional charge).* Tops will be banded with 1-3/4"W solid red oak, with profile determined by customer selection from edgeband chart. (See page 193) Table edges will be finished to match end panels.

Desk tops are fastened to side/end/back panels using 14 gauge steel brackets and top quality wood screws.

Credenza shelf is constructed of 3/4" veneer-core red oak plywood. Exposed edges will have a 1/4" solid red oak edgeband. The banded edges of shelves will receive an flush edge.

End panels and return modesty panels will be 1"T plain-sliced red oak veneer plywood. A solid red oak 1/2" thick edge band is applied to all exposed panel edges and radiused 1/8". The bottom of the panel base will have two 7/8" diameter leveling glides. Desk modesty panels will be 3/4"T rift cut red oak veneer plywood. All other exposed edges will be banded with solid red oak edge band and radiused 1/8".

Pedestals are constructed of 3/4"T plain sliced red oak veneer plywood. All exposed edges will be banded with solid red oak edge band and radiused 1/8". Drawer boxes are constructed of 1/2"T solid red oak with English dovetail. Drawer bottoms are 1/4"T red oak veneer plywood.

All drawers will be will be of English dovetail design and will be constructed using 1/2" thick red oak with a 1/4" thick red oak veneer plywood bottom. Box drawers will be 14-7/8"W x 18"D x 5-1/4"H. File drawers will be 14-7/8"W x 18"D x 10-1/2"H. Pencil drawers will be 18"W x 14-7/8"D x 3"H.

All doors will be hung with 110-degree opening, self-closing Salice hinges (180-deg.available if specified) and Salice Smove (tm) door cushion.

Pulls for both doors and drawers will be satin chrome 5/16" diameter wire pulls.

FINISH - See page 5 for finish specifications.

Visit our website at ***www.russwood.net***

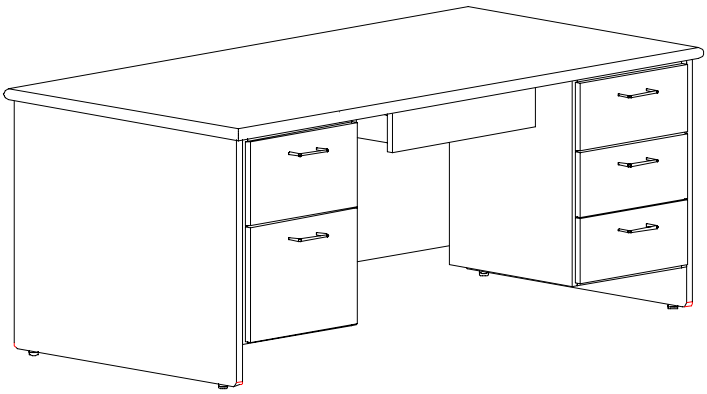

72” x 36” Desk
with file and box drawer pedestals

The desk one hanging pedestal will have (3) box drawers. The other pedestal will have (1) box drawer and (1) file drawer. Each pedestal will have a side mounted gang lock. A pencil drawer will be mounted under the desk top along the front edge.

Catalog #	Description	Height"	Width"	Depth"	Price
RG - 102	Executive Desk with 2 pedestals	29"	72"	36"	

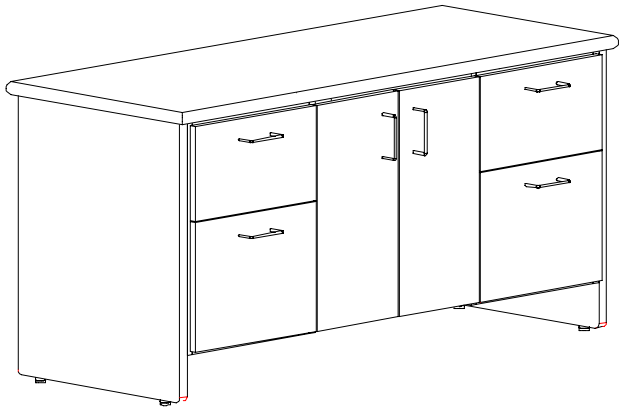

Storage Credenza
with cupboard & 2 file pedestals

The Credenza will have (2) hanging pedestals with (1) box drawer and (1) file drawer. The center cupboard will have (2) red oak veeneer plywood adjustable shelves. Cupboard will have a lock.

Catalog #	Description	Height"	Width"	Depth"	Price
RG-303	Credenza	29"	72"	24	

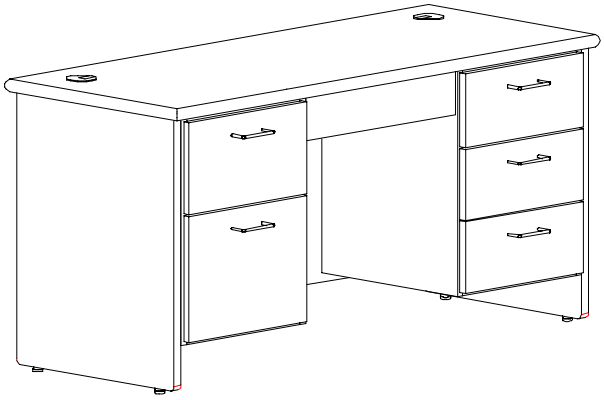

Computer Credenza
with file & box drawer pedestals

The Computer Credenza will have (2) hanging pedestals. One will have (1) box drawer and (1) file drawer. The other pedestal will have (3) box drawers. The center will have an extending keyboard tray with a “drop down” red oak drawer front. Each pedestal will have a side mounted gang lock.

Catalog #	Description	Height	Width	Depth	Price
RG-300-C	Computer Credenza	29"	72"	24	

SEE PAGE 193 FOR EDGE DETAILS

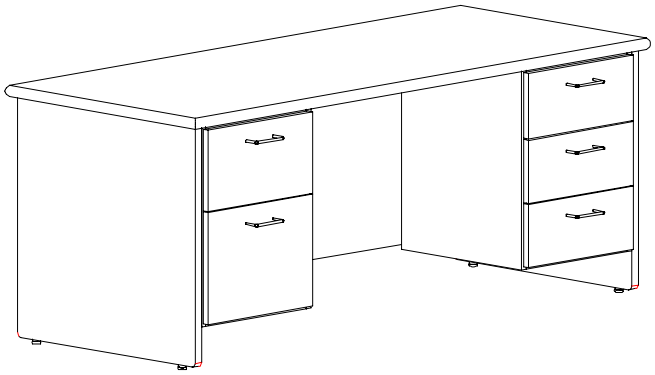

72” x 30” Desk with file and box drawer pedestals

The desk will have one hanging pedestal will have (3) box drawers. The other pedestal will have (1) box drawer and (1) file drawer. Each pedestal will have a side mounted gang lock.

Catalog #	Description	Height"	Width"	Depth"	Price
RG-202	Manager's Desk with 2 pedestals	29"	72"	30"	

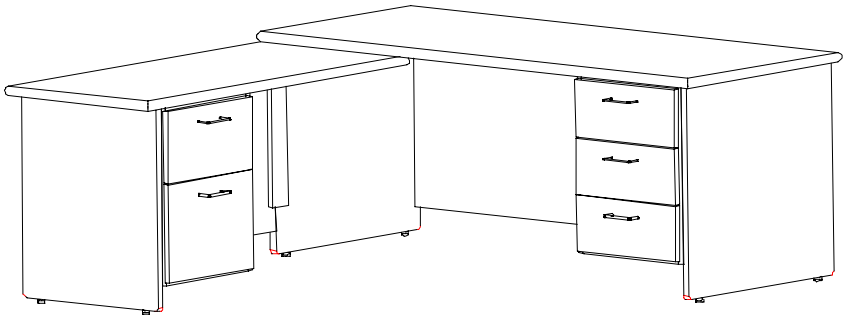

72” x 30” Desk with left return and file and box drawer pedestals

The desk will have a pedestal with (3) box drawers on the right side. The left return will be 48”L x 24”W x 27-3/4”H. The return will have a pedestal with (1) box drawer and (1) file drawer. Both pedestals will have a side mounted gang lock.

Catalog #	Description	Height"	Width"	Depth"	Price
RG-202-LR	Manager's Desk with Left Return and 2 pedestals	29"	72"	30"	

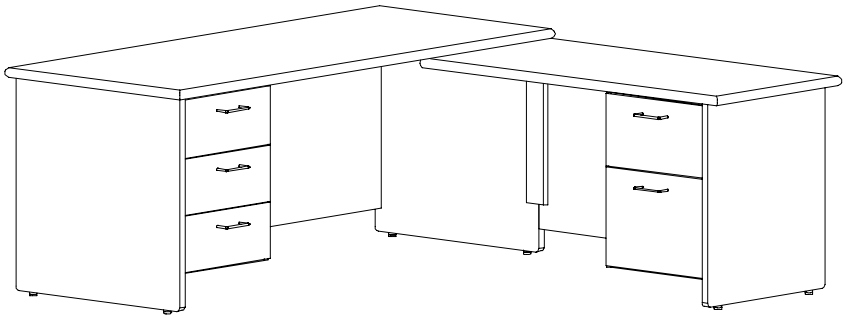

72” x 30” Desk with right return and file and box drawer pedestals

The desk will have a pedestal with (3) box drawers on the left side. The right return will be 48”L x 24”W x 27-3/4”H. The return will have a pedestal with (1) box drawer and (1) file drawer. Both pedestals will have a side mounted gang lock.

Catalog #	Description	Height"	Width"	Depth"	Price
RG-202-RR	Manager's Desk with Right Return and 2 pedestals	29"	72"	30"	

SEE PAGE 193 FOR EDGE DETAILS

The Regent Series also offers you the flexibility to create office furniture to function in your unique work environment. Simply choose the desks size that you and your staff will need. Then if needed add a credenza or return. Finally, choose from various pedestals and accessories or mobile units for each desk or return.

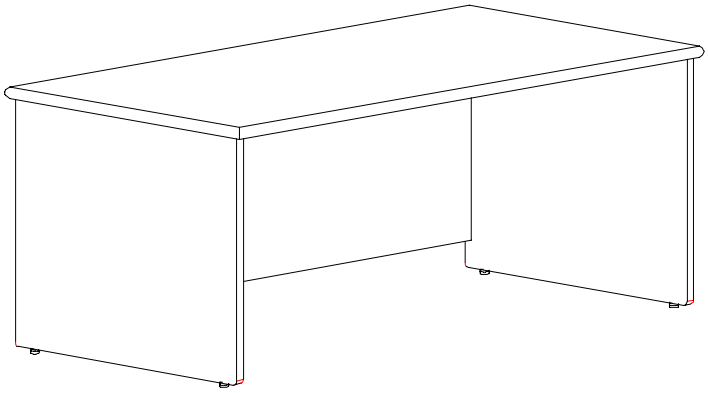

Desk

A 60”L desk may have either a return or a pedestal. On a 72”L desk, if a return and pedestal is desired, the pedestal will be mounted opposite the return. A variety of accessories are available to use with all desks.

If a desk is ordered without a return and pedestals or accessories are desired, placement of each pedestal and accessory (left, center, right) must be specified on the order.

Catalog #	Description	Height"	Length"	Width"	Price
RG-7236	72" x 36" Desk	29"	72"	36"	
RG-7230	72" x 30" Desk	29"	72"	30"	
RG-6030	60" x 30" Desk	29"	60"	30"	

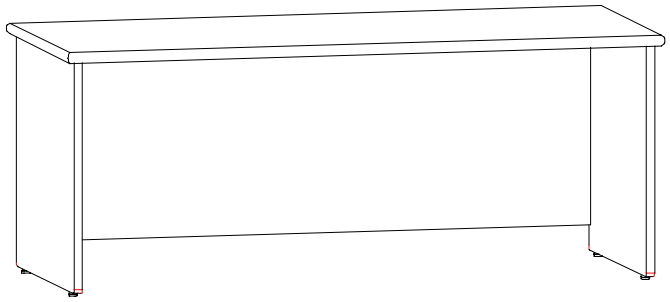

Credenza

If pedestals or accessories are desired, placement of each pedestal and accessory (left, center, right) must be specified on the order. A variety of accessories are available to use with all credenzas.

Catalog #	Description	Height"	Length"	Width"	Price
RG-472	72"L Credenza	29"	72"	24"	
RG-460	60"L Credenza	29"	60"	24"	

SEE PAGE 193 FOR EDGE DETAILS

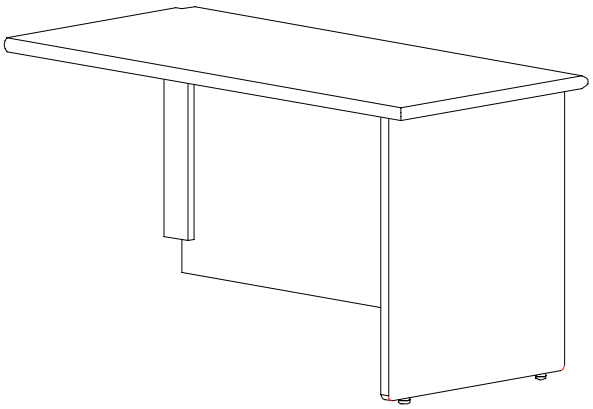

Right Return

Right returns can be used on the right side of all desk sizes. If chosen, pedestals will be placed next to the return end panels. A variety of accessories are available to use with all returns.

Catalog #	Description	Height"	Length"	Depth"	Price
RG-536R	36" Right Return	27-3/4"	36"	24"	
RG-548R	48" Right Return	27-3/4"	48"	24"	
RG-560R	60" Right Return	27-3/4"	60"	24"	

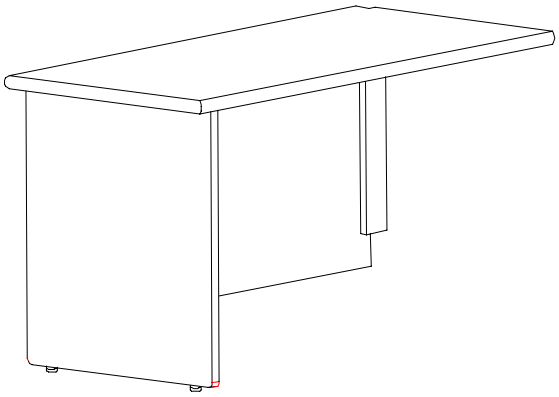

Left Return

Left returns can be used on the left side of all desk sizes. If chosen, pedestals will be placed next to the return end panels. A variety of accessories are available to use with all returns.

Catalog #	Description	Height"	Length"	Depth"	Price
RG-536L	36" Left Return	27-3/4"	36"	24"	
RG-548L	48" Left Return	27-3/4"	48"	24"	
RG-560L	60" Left Return	27-3/4"	60"	24"	

> See next three pages for pedestal and accessory choices. >

See also Accessories Section for electrical accessories for Regent Furniture

SEE PAGE 193 FOR EDGE DETAILS

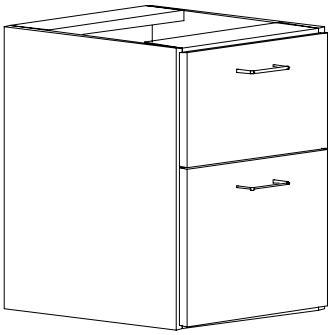

Hanging File Drawer Pedestal

This pedestal unit has one (1) box drawer and one (1) file drawer. The file drawer is 14-7/8”W x 10-1/2”H x 18”D and the box drawer is 14-7/8”W x 5-1/4”H x 18” D. Each drawer is constructed with a Satin Chrome Wire-Pull drawer handle. 3/4” red oak veneer plywood and edgebanded with 1/4”T solid red oak on all exposed edges. All drawers will be mounted on 18" full-extension, ball bearing glides with a load rating of 100 pounds per pair. Desks where locks are provided or ordered, locks will be keyed identically.

Catalog #	Description	Height"	Width"	Depth"	Price
A-19	Hanging File Drawer Pedestal	22-3/4"	17-3/8"	19-3/4"	

Hanging Three Drawer Pedestal

This pedestal unit has three (3) equal size box drawers. Each box drawer is 14-7/8”W x 5-1/4”H x 18” D and is constructed with a Satin Chrome Wire-Pull drawer handle. 3/4” red oak veneer plywood and edgebanded with 1/4”T solid red oak on all exposed edges. All drawers will be mounted on 18" full-extension, ball bearing glides with a load rating of 100 pounds per pair. Desks where locks are provided or ordered, locks will be keyed identically.

Catalog #	Description	Height"	Width"	Depth"	Price
A-19-3	Hanging Three Drawer Pedestal	22-3/4"	17-3/8"	19-3/4"	

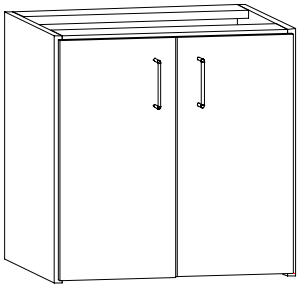

Hanging Cupboard Pedestal

This pedestal is constructed from 3/4”T red oak veneer plywood and edgebanded with 1/4”T solid red oak on all exposed edges. Unit has (1) adjustable shelf and is enclosed by two equal size doors with satin chrome wire-pull drawer handles. Adjustable shelf size for the A-42 is 31-1/2”W x 18”D x 3/4”T and for the A-43 is 19-1/2”W x 18”D x 3/4”T.

Catalog #	Description	Height"	Width"	Depth"	Price
A-42	Hanging Cupboard for 72"L Credenza	22-3/4"	33-1/4"	19-3/4"	
A-43	Hanging Cupboard for 60"L Credenza	22-3/4"	21-1/4"	19-3/4"	

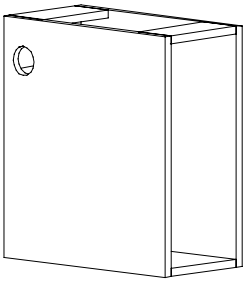

Hanging CPU Cabinet

CPU Cabinet can be custom positioned within desk or credenza unit. This pedestal is constructed of 3/4” red oak veneer plywood and edgebanded with 1/4”T solid red oak on all exposed edges. Internal dimensions are 20"D x 9"W x 16"H.

Catalog #	Description	Height"	Width"	Depth"	Price
A-18	Hanging CPU Cabinet	22-3/4	10-1/2"	20-3/4"	

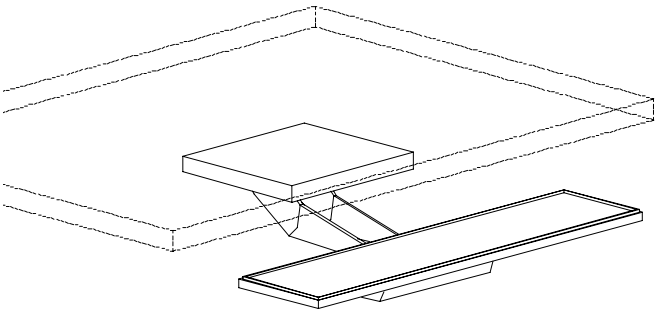

Articulating Keyboard Tray

Keyboard pullout consists of metal articulating arm with matching keyboard tray. Key board tray retracts and is adjustable left to right and up and down.

Catalog #	Description	Height"	Width"	Depth"	Price
A-16	Articulating Pull Out Keyboard Tray	6"	20-15/16"	25"	

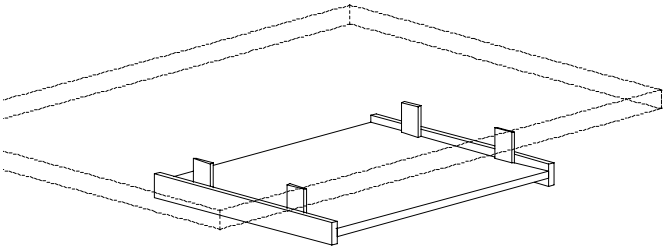

Pull-Out Keyboard Tray

The Pullout Keyboard Tray consists of metal ball-bearing glides fastened to a 3/4”T red oak veneer plywood tray. The tray size is 20”W x 16”D and is edgebanded on the front edge with 1/4”T solid red oak.

Catalog #	Description	Height"	Width"	Depth"	Price
A-17	Pullout Tray for keyboard	4-1/2"	20"	16"	
A-17-M	Pull out Tray for keyboard and mouse	4-1/2"	28"	16"	

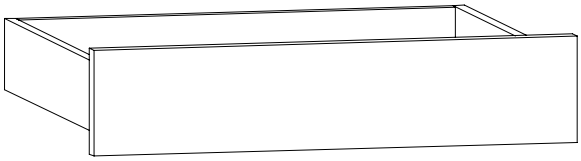

Flap Down Keyboard Tray

This key board tray is constructed with 1/2”T solid red oak. The front is 3/4”T solid red oak. The key board tray pulls out and the front tilts 90 degrees for keyboard access.

Catalog #	Description	Height"	Width"	Depth"	Price
A-40	Flap Down Keyboard Tray	4-1/4"	28"	18"	

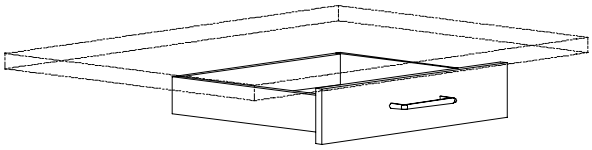

Pencil Drawer

Pencil drawer can be mounted under any desk or return arrangement where space permits. Pencil drawer inside dimensions are 17”W x 13-7/8”D x 3”H. Drawer pull is satin chrome. Drawer is mounted with full extension ball bearing glides.

Catalog #	Description	Height"	Width"	Depth"	Price
A-20	Pencil Drawer	4-1/4"	20"	18-3/4"	

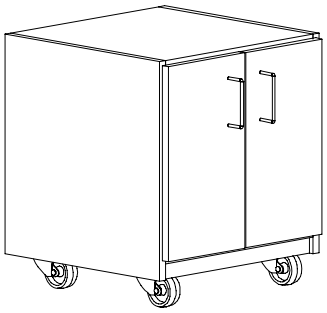

Mobile Cupboard Unit

Unit end panels are constructed of 1”T red oak veneer plywood. All other components are 3/4”T red oak veneer plywood. All exposed edges are edgebanded with 1/4”T solid red oak. The unit is supplied with one (1) adjustable shelf and one (1) base shelf. The shelf is 22-3/4”W x 17”D x 3/4”D. The back is supplied with two grommets for wire management. Wheels are 210 lbs. rated ball-bearing swivel casters. The unit is supplied with two equal size doors with stain chrome pulls.

Catalog #	Description	Height"	Width"	Depth"	Price
A-27	Mobile Cupboard	25-3/4	25	20	

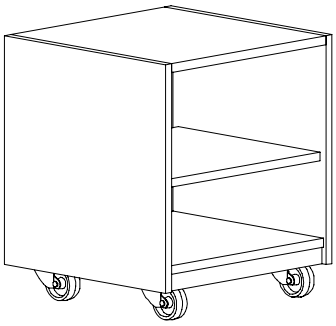

Mobile Open Shelf Unit

Unit end panels are constructed of 1”T red oak veneer plywood. All other components are 3/4”T red oak veneer plywood. All exposed edges are edgebanded with 1/4”T solid red oak. The unit is supplied with one (1) adjustable shelf and one (1) base shelf. The shelf is 22-3/4”W x 17”D x 3/4”D. The back is supplied with two grommets for wire management. Wheels are 210 lbs. rated ball-bearing swivel casters.

Catalog #	Description	Height"	Width"	Depth"	Price
A-29	Mobile Open Shelf	25-3/4	25	20	

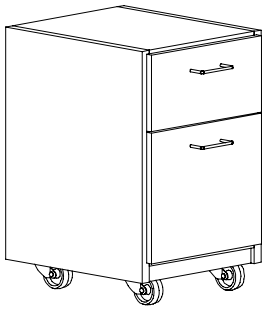

Mobile File Unit

Unit end panels are constructed of 1”T red oak veneer plywood. All other components are 3/4”T red oak veneer plywood. All exposed edges are edgebanded with 1/4”T solid red oak. Unit is supplied with one (1) box and one (1) file drawer. The box drawer is 14-7/8”W x 5-1/4”H x 18”D. The file drawer is 14-7/8”W x 10-1/2”H x 18”D. The unit is counterbalanced so that it does not tip over under normal usage. Wheels are 210 lbs. rated ball-bearing swivel casters.

Catalog #	Description	Height"	Width"	Depth"	Price
A-23	Mobile File Unit	25	17	19	

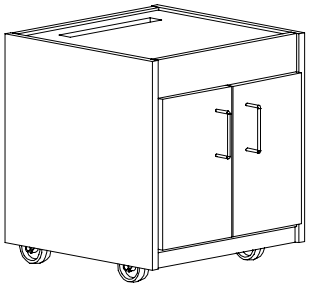

Mobile Printer Stand

Unit end panels are constructed of 1”T red oak veneer plywood. All other components are constructed with 3/4”T red oak veneer plywood. Unit is supplied with one (1) adjustable shelf and one (1) base shelf. The shelf is 22-134”W x 17”D x 3/4”T. Adj. Shelf is notched for wiring management. All exposed edges are edgebanded with 1/4”T solid red oak. Doors have satin chrome pulls. The bottom is supplied with a grommet for wire management. Wheels are 210 lbs rated ball-bearing swivel casters. The top is removable and is slotted for printer paper.

Catalog #	Description	Height"	Width"	Depth"	Price
A-24	Mobile Printer Stand	22-3/4"	20-1/2"	19-3/8"	

EDGE DETAILS FOR THE REGENT SERIES

Regent Series work surfaces may only have one of the 3/4”T solid red oak edge details below.

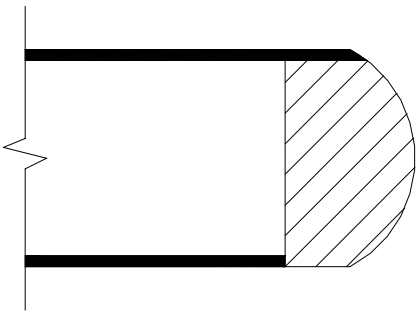

1 1/4” thick top (Internal)
Shallow Bullnose Flush

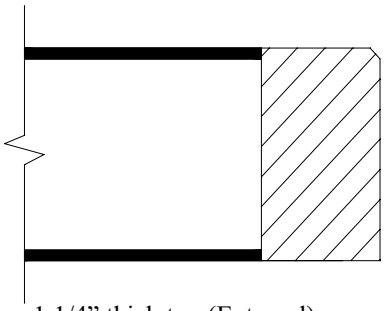

1 1/4” thick top (External)
Montana Flush

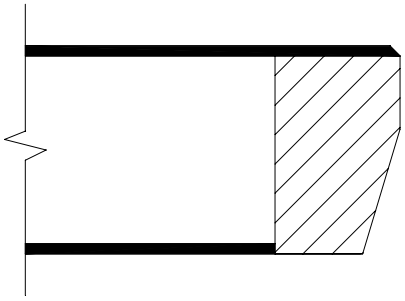

1 1/4” thick top (Internal)
Premier Flush

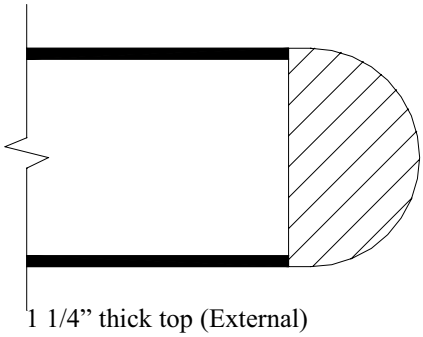

1 1/4” thick top (External)
Bullnose Flush

Slat and Ladderback Series

GENERAL SPECIFICATIONS All solid parts are kiln dried red oak. All rail joints are glued and double dowelled. Stretcher joints are glued and single doweled. Frames are reinforced with four corner blocks properly fitted, glued and screwed into each other. All wood chairs come with a solid wood saddle seat with a thickness of 1", deeply saddled for comfort. Upholstered seats are 1/2" plywood covered with 1-3/4" firm polyurethane foam, covered with specified upholstery. The backs on Ladder Back Chairs consist of two formed plywood horizontal slats. The formed plywood has a 12-ply construction. All inner plys plus the two red oak faces are construed with inner plys running horizontally and formed to a radius. Backs are glued and double dowelled to the back post The back on Slat Back Chair consist of a top rail, bottom rail and vertical slats. The top rail and the bottom rail are formed plywood with a 12-ply construction. All inner plys plus the two red oak faces are constructed with all plys running horizontally and formed to a radius. The back top rail and bottom rail are triple dowelled to back post. The vertical slats are solid red oak. The finish is of equalizing toner, vinyl sealer, glaze and 2 coats of catalyzed lacquer.

RW-18-26

RW-18C-26

RW-14-16*

*ALSO AVAILABLE IN INTERMEDIATE & ADULT SIZE

Catalog #	Description	Back Height	Seat Height	Width	Depth
RW1816	Slatback Chair	34"	18"	18"	21-1/2"
RW18C16	Slatback Chair with cushion	34'	18"	18"	21-1/2"
RW1416	Ladderback Chair - child	24-1/2"	14"	13-3/4"	13"
RW1616	Ladderback Chair - intermediate	29"	16"	15-1/2"	15-1/2"
RW1816	Ladderback Chair - adult	33"	18"	20-3/4"	20-3/4"

100 Series

GENERAL SPECIFICATIONS The chair will reflect the latest in contemporary design using squared profiles and "Waterfall" seat design. All solid parts are kiln dried 5/4" red oak with a finished thickness of 1". All dowels shall be maple, birch or beech and grooved spirally and longitudinally by compression. The front post shall be perpendicular to the floor and shall extend 6-1/4" above the side seat rail, and shall be attached to the arm by dowel construction to give an overall arm height of 24-1/2". (RW-22-18 and RW-82-18 Arm Chair) The back is 6" high and 13/16" thick. All wood backs are formed plywood with a 12 plywood construction. All inner plys plus the two red oak faces are constructed with all plys running horizontally and to form a 3" radius. Upholstered back is 12 ply 7/8" formed plywood, covered with 3/4" of polyurethane foam and specified cover. Backs are dowelled and glued into the back post. All wood seats are 5-ply, 1/2" formed ply wood with a red oak face. Upholstered seats are 5-ply 1/2" formed plywood, covered with 1//2" polyurethane foam, covered with specified upholstery. The side rails, seat rails, and backs are glued and double doweled to the post. The stretchers are glued and single doweled to the post. There are 4 corner blocks close fitted, glued and attached with 4 wood screws each. The wood is finished with one coat each of equalizing toner, vinyl sealer, glaze and 2 coats of catalyzed lacquer. Minimum Wood Stock Sizes: Front Post 1-5/8"x1" Back Post 1-3/4"x1" Side Post 3"x1" Seat Rails 3"x1" Side Stretchers 1-1/2"x1" Cross Stretchers 1-1/4"x1"

RW16112*

RW16113*

RW16118*

RW16119*

RW18122

RW18128

*ALSO AVAILABLE IN ADULT SIZE

Catalog #	Description	Back Height	Seat Height	Width	Depth
RW16112	Upholstered Leg Chair - child	28"	18"	16-1/2"	17"
RW18112	Upholstered Leg Chair - adult	31"	16"	18-1/2"	20"
RW16113	Solid wood Leg Chair - child	28"	15-1/2"	16-1/2"	17"
RW18113	Solid wood Leg Chair - adult	31"	17-1/2"	18-1/2"	19-1/2"
RW16118	Upholstered Side Chair - child	28"	18"	16-1/2"	17-1/2"
RW18118	Upholstered Side Chair - adult	31"	16"	18-1/2"	20"
RW16119	Solid wood Sled Side Chair - child	28"	15-1/2"	16-1/2"	17"
RW18119	Solidwood Sled Side Chair - adult	31"	17-1/2"	18-1/2"	19-1/2"
RW18122	Upholstered Leg Arm Chair - adult	31"	18"	20-1/2"	22-1/2"
RW18128	Upholstered Sled Arm chair - adult	31"	18"	20-1/2"	22-1/4"

150 and Executive Series

150 GENERAL SPECIFICATIONS These chairs shall be of the latest in contemporary design employing the square profile and "Waterfall" seat design. The exposed wood frame is made of kiln dried 5/4" red oak with a finished thickness of 1". All dowels shall be maple, birch or beech and grooved spirally and longitudinally by compression. All joints are glued and double dowelled. There are four corner blocks properly fitted, glued, and screwed into each corner. Where the back post joins the side rail there is (in addition to the two dowels) a 3/8” x 1-1/4” metal slug embedded in the side rail. A 1/4” x 3” bolt is counter sunk though the back post and screwed into the metal slug to form a more secure and permanent joint. The upholstered back is made of formed plywood. It has a 3 degree slope. The filling is of 3/4” thickness polyurethane foam glued to the back. The cover shall be applied with unexposed tacks, staples, or seams. The upholstered seat is made of 5-ply plywood 1/2” thick. The seats shall be upholstered with specified material over 1-1/2” thickness of polyurethane foam which shall be glued to the seat and 1/2” thickness of Ply Foam glued to the front rail. The cover shall be applied with unexposed tacks, staples, or seams. The five legs of the base are made of solid, kiln-dried 6/4" red oak attached to the metal swivel unit. Heavy hidden rails are installed under the seat to mount the swivel unit. Arms on the arm chair are 18-1/2” apart and 22 to 26” high.

EXECUTIVE SWIVEL GENERAL SPECIFICATIONS The chairs shall be made of 6/4” kiln dried oak. Joints are glued and double dowelled except on arm rails. Arms are glued and single dowelled into posts. Joints are reinforced with four corner blocks attached with glue and two wood screw on each. All dowels shall be maple, birch or beech and grooved spirally and longitudinally by compression. The back is 12-ply 7/8” formed plywood, covered with 3/4” of polyurethane foam and specified cover. The seat is 5-ply 1/2” formed plywood, covered with 2-1/2” polyurethane foam and 1 oz. of dacron then covered with customers desired cover. The seat is attached with four wood screws. The base is one piece unit made of metal with solid kiln dried 6/4” oak covering the five metal feet at the base. The finish is of equalizing toner, vinyl sealer, glaze and two coats of catalyzed lacquer.

EXECUTIVE LEG CHAIR GENERAL SPECIFICATIONS The front posts, back posts, and arms are made of 6/4” kiln dried red oak. The side and seat rails are made of 5/4” kiln dried red oak. Joints are multiple dowelled reinforced with corner blocks attached with glue and two wood screws each. The seat construction has five, 8 gauge sinuous wire springs attached at front and back with insulated clips and stabilized laterally with 12-k Kraft wrapped Flexcord. The springs are covered with Typar and stapled securely into place. The Typar is then covered with 1-1/2” of Polyurethane foam and 1” of polyester fiber, then covered with customer desired cover. The back construction is a wood frame with rubber webbing attached. The webbed frame is then covered with 1” of Polyurethane foam and customers desired cover.

RW 150 518

RW 150 528

RW 150 718

RW EX 014

RW EX 504

Catalog #	Description	Back Height	Seat Height	Width	Depth
RW 150 518	Low Swivel Chair with wheels	27 to 31"	17 to21"	18-1/2"	20"
RW 150 528	Low Swivel Arm Chair with wheels	27 to 31"	17 to 2`"	20-1/2"	23"
RW 150 718	High Swivel Chair	39 to 43"	27 to 31"	18-1/2"	20
RW EX 014	Excutive Swivel Arm Chair with wheels	30 to 33"	18 to 21"	22"	23"
RW EX 504	Excutive Leg Arm Chair	32-1/2"	19-1/2"	22"	23-1/2"

200 Series

GENERAL SPECIFICATIONS All exposed wood is kiln dried 5/4" red oak with a finished thickness of 1". The side and seat rails are glued and double-doweled to the post. The stretchers are glued and single-doweled to the post. There are four corner blocks fitted, glued and attached with two wood screws each. The upholstered seat is 5-ply, 1/2" formed plywood covered with 1-1/2" thickness of polyurethane foam, covered with a specific cover and attached to the frame with six wood screws. The finish is of equalizing toner, vinyl sealer, glaze and two coats of catalyzed lacquer.

RW 200 612

RW 200 812

RW 200 S408

Catalog #	Description	Back Height	Seat Height	Width	Depth
RW 200 612	Upholstered Stool - child		16"	16-1/2"	15-1/2"
RW 200 812	Upholstered Stool - adult		18"	16-1/2"	15-1/2"
RW 200 S408	Upholstered Bench - adult only		18"	49-1/2"	15-1/2"

250 Series

GENERAL SPECIFICATIONS All solid wood is of kiln dried 5/4" red oak with a finished thickness of 1". Back post, front post, and side rails are 2-1/4" wide. Side stretchers and side rails are 2" wide. Cross stretchers are 1-1/2" wide. All joints except cross stretchers are glued and double-doweled. Stretcher joints are glued and single-doweled. Frames are reinforced with four corner blocks properly fitted, glued and screwed into each other. All chairs come with a solid wood saddle seat having a thickness of 1". Backs are formed plywood with a 12-ply construction. All inner plies, including red oak faces, are constructed with all plies running horizontally and formed to a 23" radius. The back is 6" high and 13/16" thick. The finish is of equalizing toner, vinyl sealer, glaze and two coats of catalyzed lacquer.

RW 250 722

RW 250 W722 (solid wood chair not shown)

Catalog #	Description	Back Height	Seat Height	Width	Depth
RW 250 722	Upholstered High Leg Stool	37"	27"	16-3/4"	17"
RW 250 W722	Solid wood High Leg Stool	37"	27"	16-3/4"	17"

300 Series

GENERAL CHAIR SPECIFICATIONS All solid wood parts are of kiln dried 5/4" red oak with a finished thickness of 1". Back post, front post, and side rails are 2-1/4" wide. Side stretchers and side rails are 2" wide. Cross stretchers are 1-1/4" wide. All joints except cross stretchers are glued and double-doweled. Stretcher joints are glued and single-doweled. Frames are reinforced with four corner blocks properly fitted and screwed into each corner. Solid Wood chairs come with a solid wood saddle seat with a thickness of 1". Seats are scooped for comfort. Backs are formed plywood with a 12-ply construction. All inner plys plus the two red oak faces are constructed with all plys running horizontally and formed to a 23" radius. The back is 6" high and 13/16" thick. On upholstered chairs the upholstered seat is 1/2" thick plywood with 1-1/2" thick firm polyurethane foam, covered with specific cover. Seats are installed with six wood screws through the seat rails. Upholstered back is 5/4" thick hardwood frame, 3/4" thick polyurethane foam, covered with specific cover. Backs are installed with #12 wood screws. The finish is of equalizing toner, vinyl sealer, glaze and two coats of catalyzed lacquer. The Arm Chair arms are 18-1/2" apart and 26 to 26-1/4" high.

GENERAL STOOL SPECIFICATIONS All exposed wood is solid kiln dried 5/4" red oak with a finished thickness of 1". The side and seat rails are glued and doubled doweled to the post. The stretchers are glued and double doweled to the post. There are 4 corner blocks, fitted, glued and attached with 2 wood screw each. The seat is 1/2" plywood, covered with 1-1/2 polyurethane foam, covered with specified cover and attached to frame with 6 wood screws. The finish is of equalizing tone, vinyl sealer, glaze and 2 coats catalyzed lacquer. Stools are shipped assembled.

RW 300 822

RW 300 712

RW 16 128

RW 16 138

RW 18 228

RW 16 198

RW 16 188

RW 18 228

Catalog #	Description	Back Height	Seat Height	Width	Depth
RW 300 822	High Sled Upholstered Stool		29"	16"	15"
RW 300 712	Low Sled Upholstered Stool		18"	16"	15"
RW 16 128	Leg Upholstered Side Chair - child	28"	18"	16-1/2"	19"
RW 18 128	Leg Upholstered Side Chair - adult	32"	18"	18-1/2"	19"
RW 16 138	Leg Solid Wood Side Chair - child	28"	16"	16-1/2"	17-1/2"
RW 18 138	Leg Solid Wood Side Chair - adult	32"	18"	18-1/2"	19"
RW 18 228	Leg Upholstered Arm Chair - adult	32"	18"	20-1/2"	20"
RW 18 W228	Leg Solid Wood Arm Chair - adult (not pictured)	32"	18"	20-1/2"	20"
RW 16 188	Sled Upholstered Side Chair - child	28"	16"	16-1/2"	19"
RW 18 188	Sled Upholstered Side Chair - adult	32"	18"	18-1/2"	19"
RW 16 198	Sled Solid Wood Side Chair - child	28"	16"	16-1/2"	17-1/2"
RW 18 198	Sled Solid Wood Side Chair - adult	32"	18"	18-1/2"	19"
RW 18 288	Sled Upholstered Arm Chair - adult	32"	18"	20-1/2"	20"
RW 18 W228	Sled Solid Wood Arm Chair - adult (not pictured)	32"	18"	20-1/2"	20"

350 Series

GENERAL SPECIFICATIONS All solid wood is of kiln dried 5/4" red oak with a finished thickness of 1".
Back post are 2-1/4" wide and seat rails are 2" wide. All joints are glued and double-doweled. There are four corner blocks properly fitted, glued and screwed into each other. Where the back post joins the side rail, there is a 3/8" x 1-1/4" metal slug embedded into the side rail, into which a 1/4" x 3" bolt is countersunk through the back post and is screwed into the slug to form a more secure and permanent joint. Upholstered seat is 1/2" thick formed plywood with 1-1/2" thick polyurethane foam, covered with specific cover. Seats are installed with six wood screws through the seat rails. Upholstered back is made of formed plywood covered with 3/4" thick polyurethane foam, covered with specific cover. The cover shall be applied with no exposed tacks, staples or seams. The back is attached to each back post with two #12 wood screws. The base is made of solid, kiln-dried 6/4" red oak attached to the metal swivel unit. Heavy hidden rails are installed under the seat to mount to the swivel unit. The arms on the armchair are 18-1/2 apart and 24-28" high.

RW 350 15

RW 350 25

RW 350 17

Catalog #	Description	Back Height	Seat Height	Width	Depth
RW 350 15	Low Swivel Chair with wheels	29 to 32"	17 to21"	18-1/2"	18-1/2"
RW 350 25	Low Swivel Arm Chair with wheels	29 to 32"	17 to 2`"	18-1/2"	19"
RW 350 17	High Swivel Chair	40 to 43"	27 to 31"	18-1/2"	19"

400 Series

GENERAL SPECIFICATIONS All solid wood is of kiln dried 5/4" red oak with a finished thickness of 1". All joints will be glued and double dowelled with the exception of the stretcher joints which will be glued and single doweled. Upholstered seat is 1/2" thick plywood with 1-1/2" thick firm polyurethane foam, covered with specific cover. Seats are installed with six wood screws through the seat rails. The back post will be straight with the back installed at an angle to provide maximum seating comfort. The back is 13/16" x 7-1/2" with 3/4" thick polyurethane foam wrapped around and covered with specific cover. The back will be secured to each back post with two #12 wood screws. The finish is of equalizing toner, vinyl sealer, glaze and two coats of catalyzed lacquer.

RW 18 148

RW 18 158

RW 18 258

Catalog #	Description	Back Height	Seat Height	Width	Depth
RW 18 148	Solid Wood Two Position Side Chair	30-1/2"	17"	18-1/2"	25"
RW 18 158	Upholstered Two Position Side Chair	30-1/2"	17"	18-1/2"	25"
RW 18 258	Upholstered Two Position Arm Chair	30-1/2"	17"	18-1/2"	25"

450 Series

450 GENERAL SPECIFICATIONS All solid wood is of kiln dried 5/4" red oak with a finished thickness of 1". Tops are high pressure laminate, and are connected to frame with wood screws and four corner blocks fitted, glued and screwed into place. All rails are 3" x 1". The finish is of equalizing toner, vinyl sealer, glaze and two coats of catalyzed lacquer.
650 GENERAL SPECIFICATIONS Exposed wood arms and end frames are constructed of kiln dried 6/4" solid red oak. Seat and back rails are constructed of 5/4" solid, kiln-dried red oak. Interior frame is constructed of 5/4" solid kiln-dried maple. All joints are glued up and triple or double-doweled with 7/16" x 2" spiral grooved dowel pins. Corner blocks are fitted, glued and screwed into place. The seat and back construction consist of a Perma-Eze seat unit by Flex-o-Laters, Inc. this unit is uniquely designed to be used as springs as well as an insulator. Perma-Eze is made with a heavy gauge, oil-tempered wire, wrapped with heavy, kraft-twisted paper to provide noiseless construction when attached to the seat frame. Heavy-duty hexlicals, 3-1/2" long, permit a total independency of seating action which in essence, creates a contour seat on a flat deck. All foam filling is a premium grade manufactured to ANSI/BIMFA 1st Generation Flammability Standard f-1-1978 (rev.A80). All seams are double-needle luggage stitched.

Catalog #	Description	Back Height	Seat Height	Width	Depth
RW 450 107	Small End Table (left of loveseat)	20-1/4"		19-5/8"	27-1/4"
RW 450 207	Large End Table (right of loveseat)	20-1/4"		26-5/8"	27-1/2"
RW 450 407	Coffee Table	16"		48-12"	19-5/8"
RW 650 L102	Lounge Chair	31"	20"	27-3/4"	27"
RW 650 L202	Lounge Love Seat	31"	20"	49-3/4"	27"
RW 650 L302	Lounge Couch	31"	20"	71-3/4"	27"

500 Series

Tables GENERAL SPECIFICATIONS
All solid wood is of kiln dried 5/4" red oak with a finished thickness of 1". Tops are high pressure laminate (black slate), and are connected to frame with wood screws and four corner blocks fitted, glued and screwed into place. All rails are 3" x 1". The finish is of equalizing toner, vinyl sealer, glaze and two coats of catalyzed lacquer.
Seating GENERAL SPECIFICATIONS
Exposed wood frame is kiln dried 6/4” red oak. Corners are rounded to 1-1/2” radius and edge rounded to 3/8” radius. Chairs have four 1-1/16” nickel plated rubber cushion glides. Interior upholstered seat/back frame is kiln dried 5/4” maple. All joints are double dowelled and have corner blocks fitted, glued, and screwed into place. This frame is then upholstered as follows. The upholstered seat construction has four, 8 1/2” gauge sinuous wire springs attached at front and back with insulated clips and stabilized laterally with 12-K Kraft wrapped Flexcord. The springs are covered with Typar and stapled securely into place. The Typar is covered with 3 inches of 40-50 lb. compression Polyurethane foam and 1oz. Dacron fiber, then covered with customers desired cover with a Typar dust bottom. The upholster back construction is of four, 12 gauge sinuous wire springs attached at the top and bottom with insulated clips, stabilized laterally with 12-K Kraft wrapped Flexcord, then covered with Typar securely stapled into place. The Typar is covered with 3 inches of 40-50 lb. compression Polyurethane foam and 1oz. fiber extending over the complete back, then covered with customers desired cover. All seams are double-needle luggage stitched. The upholstered unit is attached to the exposed wood frame from the bottom with size #100 wood screws. The finish is of equalizing toner, vinyl sealer , glaze and two coats of catalyzed lacquer.

Catalog #	Description	Back Height"	Seat Height"	Width"	Depth"
RW 500 108	Small End Table (not shown)	20"		19-1/2"	27"
RW 500 208	Large End Table	20"		26-1/2"	27"
RW 500 408	Coffee Table	16"		49-1/2"	21"
RW 500 L101	Lounge Chair	28-1/2"	17"	28"	28-1/2"
RW 500 L201	Lounge Love Seat (not shown)	28-1/2"	17"	53-1/2"	28-1/2"
RW 500 L301	Lounge Couch	28-1/2"	17"	79"	28-1/2"

600 Series

Tables GENERAL SPECIFICATIONS
All solid wood is of kiln dried 5/4" red oak with a finished thickness of 1". Tops are high pressure laminate, and are connected to frame with wood screws and four corner blocks fitted, glued and screwed into place. All rails are 3" x 1". The finish is of equalizing toner, vinyl sealer, glaze and two coats of catalyzed lacquer.
Seating GENERAL SPECIFICATIONS
Exposed wood frame is kiln dried 6/4" red oak. Corners are rounded to 1-1/2" radius and edge rounded to 3/8" radius. Chairs have four 1-1/16" nickel plated rubber cushion glides. Interior upholstered seat/back frame is kiln dried 5/4" maple. All joints are double dowelled and have corner blocks fitted, glued, and screwed into place. This frame is then upholstered as follows. The upholstered seat construction has four, 8 1/2" gauge sinuous wire springs attached at front and back with insulated clips and stabilized laterally with 12-K Kraft wrapped Flexcord. The springs are covered with Typar and stapled securely into place. The Typar is covered with 3 inches of 40-50 lb. compression Polyurethane foam and 1oz. Dacron fiber, then covered with customers desired cover with a Typar dust bottom. The upholster back construction is of four, 12 gauge sinuous wire springs attached at the top and bottom with insulated clips, stabilized laterally with 12-K Kraft wrapped Flexcord, then covered with Typar securely stapled into place. The Typar is covered with 3 inches of 40-50 lb. compression Polyurethane foam and 1oz. fiber extending over the complete back, then covered with customers desired cover. All seams are double-needle luggage stitched. The upholstered unit is attached to the exposed wood frame from the bottom with size #100 wood screws. The finish is of equalizing toner, vinyl sealer , glaze and two coats of catalyzed lacquer.

Catalog #	Description	Back Height"	Seat Height"	Width"	Depth"
RW 600 S108	Small End Table (not shown)	20"		19-1/2"	27"
RW 600 S208	Large End Table	20"		26-1/2"	27"
RW 600 S408	Coffee Table	16"		49-1/2"	21"
RW 600 U101	Lounge Chair	28-1/2"	17"	28"	28-1/2"
RW 600 U201	Lounge Love Seat (not shown)	28-1/2"	17"	53-1/2"	28-1/2"
RW 600 U301	Lounge Couch	28-1/2"	17"	79"	28-1/2"

Planning For & Ordering Edgeband

See Page 2 for location of specific edgebands for each Series or furniture type.

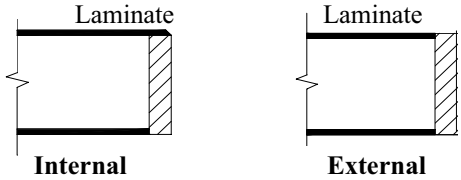

When choosing an edgeband for continuous tops you can either have the edgeband placed internally (the edgeband captured by the laminate) or externally (the laminate captured by the edge band)

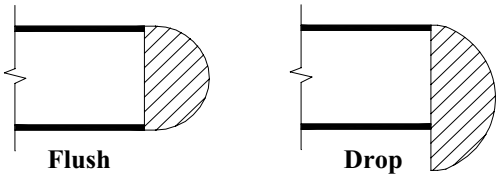

When choosing an edgeband for continuous tops you can either have the edgeband placed flush with the bottom of the top or dropped below the bottom.

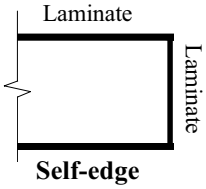

When choosing an edgeband for continuous tops you can have a laminate edgeband matching the laminate top (self-edge). All edges and corners are finished for maximum "bump" protection.

Edgeband Options for Top Thicknesses

(Note: top thickness is specified by unit)

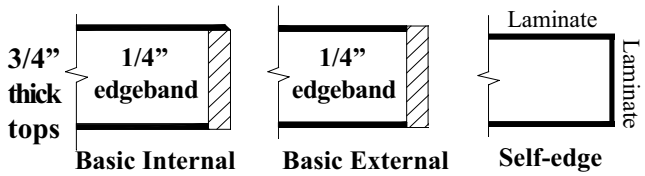

3/4" thick tops are only offered with a BASIC 1/4"T solid wood internal or eternal edgeband or the matching laminate (self-edge.)

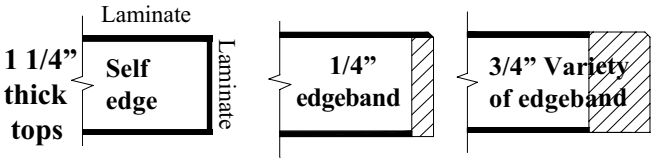

1-1/4" thick tops can be constructed with a laminated (self edge) OR 1/4"T Internal BASIC solid wood edgeband OR 3/4"T solid wood with a variety of internal or external edgeband details.

Edgeband Details.

All Russwood units using veneer plywood receive a edgeband on all exposed edges. Familiarize yourself with these standard edgeband shapes and terms as your order may require that you choose one of these edgebands.

See Table of Contents for location of specific edgebands for each Series or furniture type.

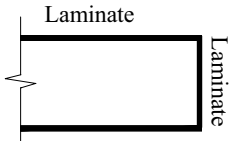

Self Edge
3/4" thick top OR
1-1/4" thick top

3/4" thick top (Internal)
Basic Flush

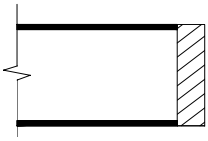

3/4" thick top (External)
Basic Flush External

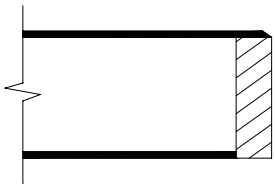

1 1/4" thick top (Internal)
Basic Flush

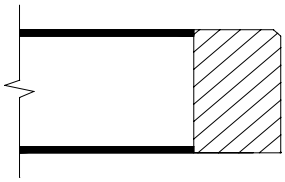

1 1/4" thick top (External)
Montana Flush

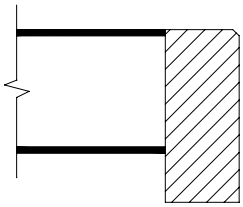

1 1/4" thick top (External)
Montana Drop

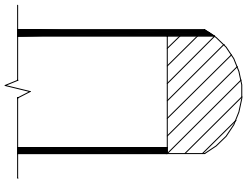

1 1/4" thick top (Internal)
Shallow Bullnose Flush

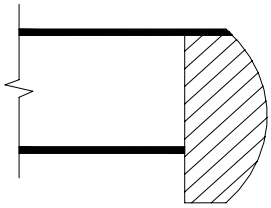

1 1/4" thick top (Internal)
Shallow Bullnose Drop

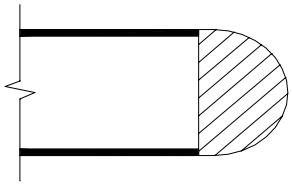

1 1/4" thick top (External)
Bullnose Flush

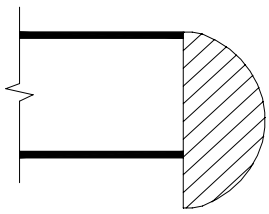

1 1/4" thick top (External)
Bullnose Drop

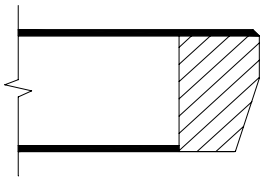

1 1/4" thick top (Internal)
Premier Flush

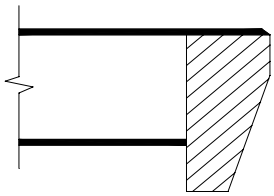

1 1/4" thick top (Internal)
Premier Drop

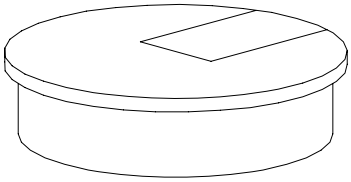

Grommet

3" diameter grommet with 7/8"W retractable tab. Grommet fits into a sleeve. Grommet has an inside diameter of 2-1/2" and is made for a 2-3/4" diameter opening. The grommet is made of molded black ABS.

Catalog #	Description	Height"	Diameter"		Price
A-01	Electrical Grommet (2 Piece)	3/4"	3"		

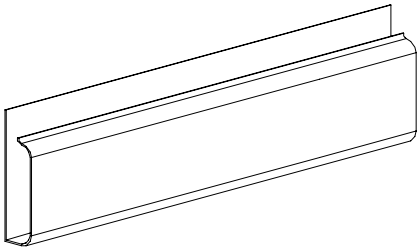

J-Channel Wire Manager

Wire manager is made out of J-shaped, molded black ABS plastic. Wire manager is easy to install using staples or screws and can be mounted both horizontally and vertically.

Catalog #	Description	Height"	Width"	Depth"	Price
A-03	J-Channel Wire Manager	4"	per foot"	1"	per foot

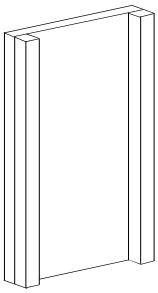

Solid-Wood Wire Chase

This option is designed to work in conjunction with the wire grommet to further conceal wiring. The chase must be priced and specified on the order form if desired. Grommets and wire manager are custom positioned in each unit to ensure concealment.

Catalog #	Description	Height"	Width"	Depth"	Price
A-04	Solid-wood Wire-Chase	customized per unit	4"	1-1/4"	

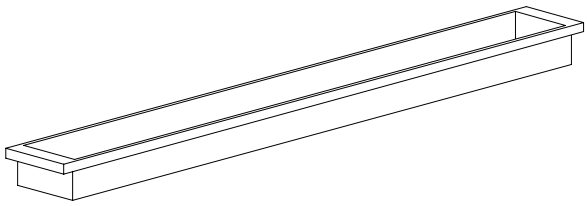

Computer Paper Grommet

18"L x 2"W paper grommet with locator pins for fixed placement. Inside dimensions are 17"L x 1-3/4"W and is made for a 17-1/4"L x 1-7/8"W opening.

Catalog #	Description	Height"	Width"	Depth"	Price
A-02	Paper-Feed Grommet	1"	18"	2"	

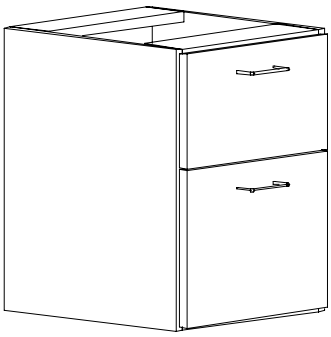

Hanging File Drawer Pedestal

This pedestal unit has one (1) box drawer and one (1) file drawer. The file drawer is 14-7/8”W x 10-1/2”H x 18”D and the box drawer is 14-7/8”W x 5-1/4”H x 18” D. Each drawer is constructed with a Satin Chrome Wire-Pull drawer handle. 3/4” oak veneer plywood and edgebanded with 1/4”T solid oak on all exposed edges.

Catalog #	Description	Height"	Width"	Depth"	Price
A-19	Hanging File Drawer Pedestal	22-3/4"	17-3/8"	19-3/4"	

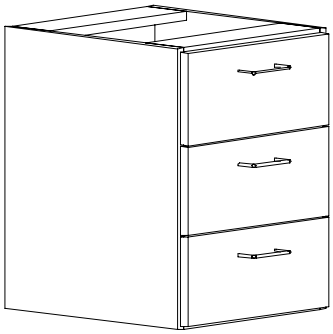

Hanging Three Drawer Pedestal

This pedestal unit has three (3) equal size box drawers. Each box drawer is 14-7/8”W x 5-1/4”H x 18” D and is constructed with a Satin Chrome Wire-Pull drawer handle. 3/4” oak veneer plywood and edgebanded with 1/4”T solid oak on all exposed edges.

Catalog #	Description	Height"	Width"	Depth"	Price
A-19-3	Hanging Three Drawer Pedestal	22-3/4"	17-3/8"	19-3/4"	

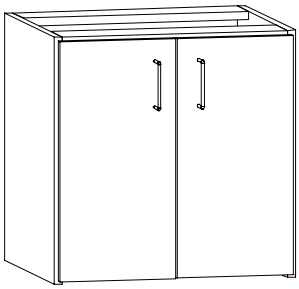

Hanging Cupboard Pedestal

This pedestal is constructed from 3/4”T oak veneer plywood and edgebanded with 1/4”T solid oak on all exposed edges. Unit has (1) adjustable shelf and is enclosed by two equal size doors with satin chrome wire-pull drawer handles. Adjustable shelf size for the A-42 is 31-1/2”W x 18”D x 3/4”T and for the A-43 is 19-1/2”W x 18”D x 3/4”T.

Catalog #	Description	Height"	Width"	Depth"	Price
A-42	Hanging Cupboard for 72"L Credenza	22-3/4"	33-1/4"	19-3/4"	
A-43	Hanging Cupboard for 60"L Credenza	22-3/4"	21-1/4"	19-3/4"	

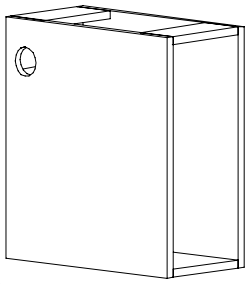

Hanging CPU Cabinet

CPU Cabinet can be custom positioned within desk or credenza unit. This pedestal is constructed of 3/4” oak veneer plywood and edgebanded with 1/4”T solid oak on all exposed edges. Internal dimensions are 20"D x 9"W x 16"H.

Catalog #	Description	Height"	Width"	Depth"	Price
A-18	Hanging CPU Cabinet	22-3/4	10-1/2"	20-3/4"	

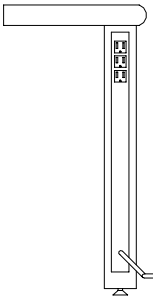

Three Outlet Power Leg

Optional power leg is made of solid matching hardwood with a flush-mounted, UL-approved power strip. Power strip has three outlets and is supplied with a five-foot cord.

Catalog #	Description	Height"	Width"	Depth	Price
A-925	Power Leg for 25"H Table	25	2-14"	2-1/4"	
A-927	Power Leg for 27"H Table	27	2-14"	2-1/4"	
A-929	Power Leg for 29"H Table	29	2-14"	2-1/4"	
A-939	Power Leg for 39"H Table	39	2-14"	2-1/4"	

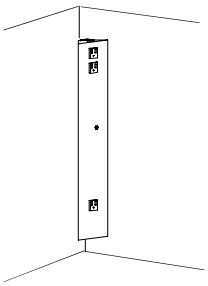

Three Outlet Corner Power Column

Designed to fasten in the corner of any paneled unit or tables with aprons. Power column has a 15-AMP rating, local circuit breaker and three outlets. Unit attaches vertically or horizontally with concealed screws.

Catalog #	Description	Height"	Width"	Depth"	Price
A-12	Power Column for Corners	4"	per foot"	1"	

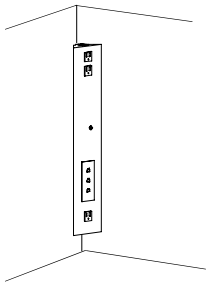

Three Outlet /Three RJ45's Corner Power Column

Designed to fasten in the corner of any paneled unit or tables with aprons. Power column has a 15-AMP rating, local circuit breaker and three outlets. Unit attaches vertically or horizontally with concealed screws. Unit also contains (3) RJ45 ports.

Catalog #	Description	Height"	Width"	Depth"	Price
A-12RJ	3 Outlet 3 RJ45's Corner Power Outlet	20"	4-1/4"	1-1/2"	

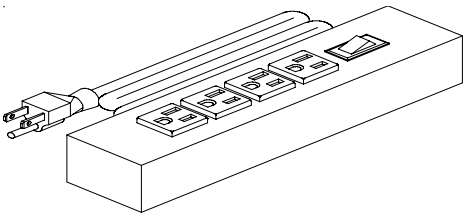

4 Outlet Power Strip

Power strip is UL listed, has four outlets and circuit breaker with reset switch. Strip features full surge protection with indicator light and six-foot cord.

Catalog #	Description	Height"	Length"	Width"	Price
A-13	4 Outlet Power Strip	1-7/8"	9-1/2"	2"	

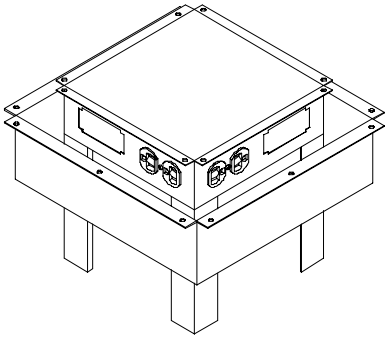

Retracting Four Sided Power Data Center

Manual lift w/4 duplexes, 4 RJ-11, 4 RJ-45, 72" cord with molded plug, 15 amp circuit breaker.

Catalog #	Description		Length"	Width"	Price
A-33	Retracking 4 Sided Power Data Center		11-3/8"	11-3/8"	

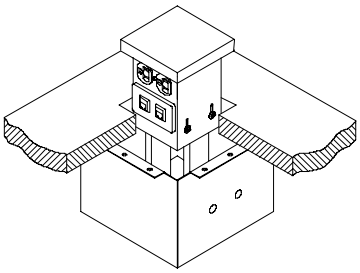

Retracting Two Sided Power Data Center

Manual lift w/ 2 duplexes, 2 RJ-11, 2 RJ-45, 72" cord with molded plug, 15 amp circuit breaker.

Catalog #	Description		Length"	Width"	Price
A-40	Retracking 2 Sided Power Data Center		5"	5"	

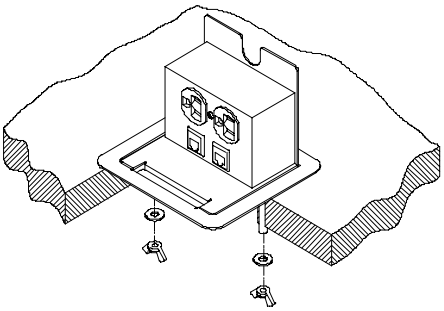

Flip Up Power Data Center

Black textured finish. Table top flip up unit w/ 1 duplex, 1 RJ-11 cat 3, 1 RJ-45 cat 6, 72" cord with molded plug.

Catalog #	Description		Length"	Width"	Price
A-41	Flip Up Power Data Center		4-1/2"	4-1/2"	

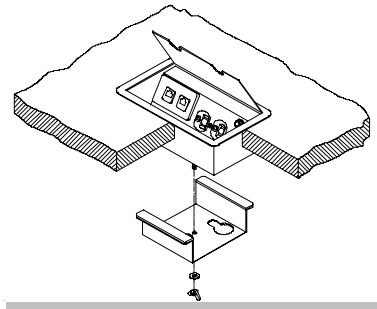

Recessed Power Data Center (Single)

Black textured finish. Table top unit w/1 duplex, 72" cord with molded plug, 15 amp circuit breaker, 3rd receptacle on bottom for Convenience outlet, 1 configurable telecom plate ordered separately

Catalog #	Description		Length"	Width"	Price
A-36	Recessed Power Data Center (Single)		8-1/4"	4-5/8"	

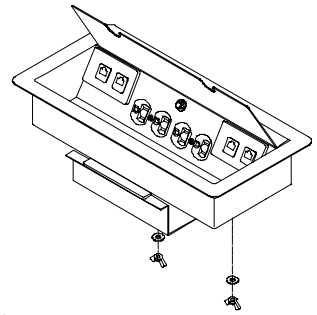

Recessed Power Data Center (Double)

Black textured finish. Table top unit w/ 2 duplexes, 72" cord with molded plug, 15 amp circuit breaker, 2 configurable telecom plates ordered separately.

Catalog #	Description		Length"	Width"	Price
A-37	Recessed Power Data Center (Double)		13-1/2"	6"	

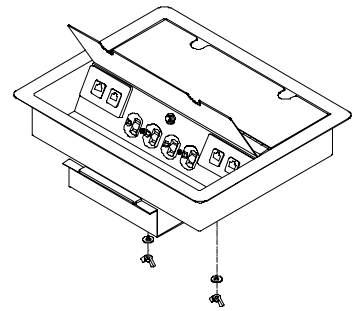

Recessed Power Data Center (Quad)

Black textured finish. Table top unit w/ 4 duplexes, 72 " cord with molded plug, 15 amp circuit breaker, 4 configurable telecom plates ordered separately

Catalog #	Description		Length"	Width"	Price
A-38	Recessed Power Data Center (Quad)		13-1/2"	11"	

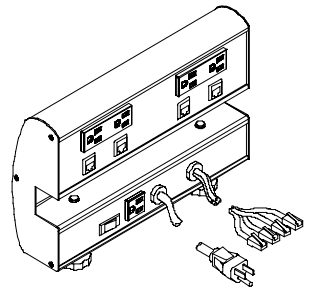

Removable Power Data Center

Black textured finish. Clamp on voice/data/power for training tables w/2 duplex, 2 RJ-11 cat 3, 2 RJ-45 cat 6, 72" cord with molded plug, 4- 60" patch cords for telecom wiring, lighted ON/OFF switch- circuit breaker, 5th receptacle on bottom for convenience outlet.

Catalog #	Description	Height"	Length"	Width"	Price
A-39	Removable Power Data Center	7-3/4"	10"	2-7/8"	

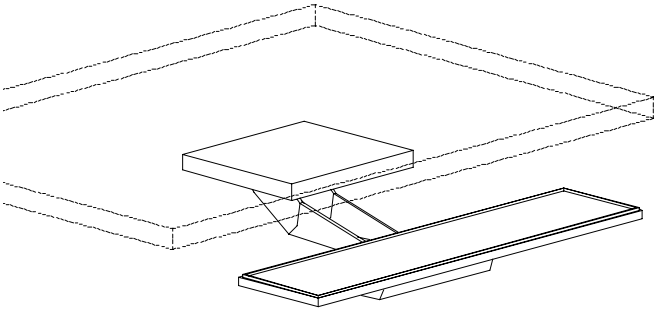

Articulating Keyboard Tray

Keyboard pullout consists of metal articulating arm with matching keyboard tray. Key board tray retracts and is adjustable left to right and up and down.

Catalog #	Description	Height"	Width"	Depth"	Price
A-16	Articulating Pull Out Keyboard Tray	6"	20-15/16"	25"	

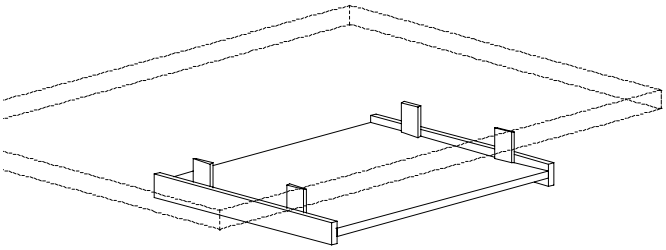

Pull-Out Keyboard Tray

The Pullout Keyboard Tray consists of metal ball-bearing glides fastened to a 3/4”T oak veneer plywood tray. The tray size is 20”W x 16”D and is edgebanded on the front edge with 1/4”T solid oak.

Catalog #	Description	Height"	Width"	Depth"	Price
A-17	Pullout Tray for keyboard	4-1/2"	20"	16"	
A-17-M	Pull out Tray for keyboard and mouse	4-1/2"	28"	16"	

Flap Down Keyboard Tray

This key board tray is constructed with 1/2”T solid oak. The front is 3/4”T solid oak. The key board tray pulls out and the front tilts 90 degrees for keyboard access.

Catalog #	Description	Height"	Width"	Depth"	Price
A-40	Flap Down Keyboard Tray	4-1/4"	28"	18"	

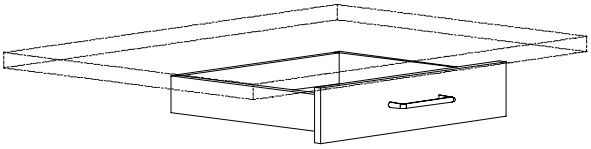

Pencil Drawer

Pencil drawer can be mounted under any desk or return arrangement where space permits. Pencil drawer inside dimensions are 17”W x 13-7/8”D x 3”H. Drawer pull is satin chrome. Drawer is mounted with full extension ball bearing glides.

Catalog #	Description	Height"	Width"	Depth"	Price
A-20	Pencil Drawer	4-1/4"	20"	18-3/4"	

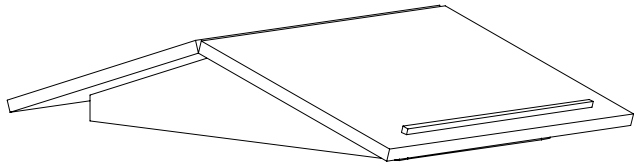

Revolving Dictionary Stand (Single or Double)

Each stand will have full 360-degree rotation capability on a ball-bearing supported base with protective material. The sloped top will have a retaining strip attached to the lower end.

Catalog #	Description	Height"	Width"	Depth"	Price
RDS-112	Single-faced stand	5	21	18	
RDS-118	Double-faced stand	5	21	35	

Task Light

Task light is supplied with 20-watt fluorescent bulb, plastic diffuser lens and push-switch power interrupter. Unit mounts horizontally and is supplied with a 72" cord to be plugged into power strip accessories.

Catalog #	Description	Height"	Width"	Length"	Price
A-15	Task Light	1"	4-1/2"	12"	

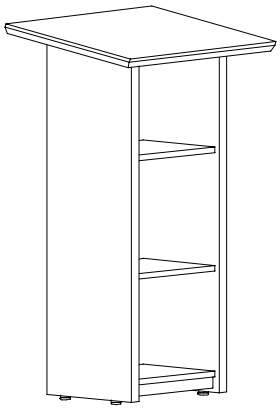

Podium

This accessory provides an angled surface with a retaining strip at the bottom. Three non-adjustable shelves are built in to the base. 3/4” oak veneer plywood and edgebanded on all exposed edges.

Catalog #	Description	Height"	Width"	Depth"	Price
A-32	Podium	46"	20"	15"	

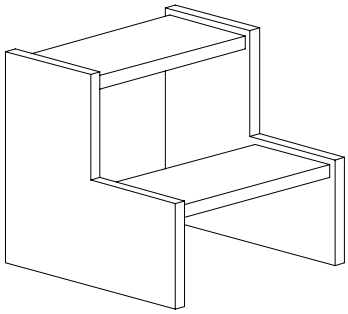

Step Stool

Step stool is 3/4” oak veneer plywood and edgebanded on all exposed edges.
18"W x 16-1/2"H x 24"D.

Catalog #	Description	Height"	Width"	Depth"	Price
A-22	Step Stool	16-1/2"	18"	18"	

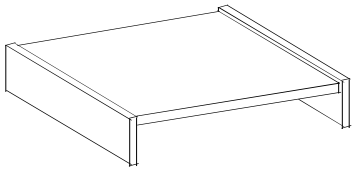

Desktop Monitor Stand

Monitor stand is designed to support up to a 21" monitor with keyboard storage provided within stand assembly. 3/4” oak veneer plywood and edgebanded on all exposed edges. Inside dimensions are 20"W x 9"D x 3-1/4"H.

Catalog #	Description	Height"	Width"	Depth"	Price
A-21	Desk-top Monitor Stand (Repositionable)	4-1/2"	22-3/4"	14"	

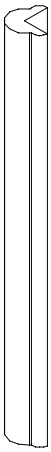

Rubber Corner Bumper

High density rubber bumper. Grey in color. Attached to corner with (8) wood screws. Bumper are generally used on mobile units.

Catalog #	Description	Length	Width"	Depth"	Price
A-47	One Rubber Corner Bumper	11-1/2"	1-3/16"	1-3/16"	