Prices effective February 2, 2015

Published July 2015

Layout Studio®

Introduction	**page 2**
Layout Studio®	**3**
Infrastructure	5
Power & Wire Management	16
Connect™	23
Surfaces	33
Screens	49
Hardware	59
Indices	**61**
By Name	61
By Number	63
Appendices	
20-Day or Less/Assigned Lead-Time Order Information	
Proprietary Textiles Application Chart-Workspaces	
Proprietary Textile Colors-Workspaces	

For the latest materials information, refer to the Materials pages on HermanMiller.com.

PB_LSN

Introduction

A Note on the Organization of This Book

There are a few signals that will help you understand the organization of this book. Once you know them, you should be able to find your way around easily.

Like a newspaper, this book is formatted with columns of text and illustrations that run vertically.

Information wraps from one column to the next and continues for as many pages as it needs to.

Black bars are clues.

A black bar at the top of a page signals the start of information about a product.

This information is divided into two sections, each signaled by a black bar. Product Information includes a description, additional notes, and dimensional drawings. Specification Information, which always begins at the top of a column, includes a series of steps. Each step represents a decision you need to make in order to complete your product number. Steps must be followed sequentially. The number of pages needed to complete information on a product varies; some will be complete in one page; others may fill three or four pages. Just continue going through the steps until you run into the next product, signaled by the black bar at the top of the page.

Black tabs running along the outside edge of the page help you locate what section you are in or what section you want to go to. You can thumb forwards or backwards to find a section; tabs and text appear on both sides of the page.

The additional pages in the back of the book include the appendices and indices. They are signaled by a long black bar running along the outside edge of the page.

The index is presented two ways.

The first index is in alphabetical order by product name. It can be helpful if you are new to the products and numbering scheme or if you are looking for a type of product, such as work chair or round table.
The second index is by product number. It lists, in alphanumeric order, the base product number, typically a five-digit number.

General Information

This book is effective February 2, 2015, subject to change without notice. Products may be purchased from authorized Herman Miller dealers who will quote prices upon request. For more information about our products and services or to see a list of dealers, visit www.HermanMiller.com.

All prices are list prices. Additional services, such as planning services, design, storage, and installation, are not included and must be added to these prices when the additional services are requested.

Illustrations, specifications, and prices are based on the latest information at the time of publication. The right is reserved to make changes at any time without notice in prices, fabrics, finishes, materials, specifications, and models, and also to discontinue models and finishes.

Dimensions shown in the drawings are engineering drawing dimensions rounded up to the nearest 1/8". Product is shipped set up or knocked down. Products that include "Shipped knocked down" in the description require some assembly. If this statement does not appear in the description, the product is shipped assembled.

Service problems are normally handled by a Herman Miller authorized dealer. Where this cannot be accomplished on a local level, service problems should be referred to the Customer Care Representative for your region, Herman Miller, Inc., Zeeland, Michigan 49464.

20-Day or Less/Assigned Lead-Time Shipments

All products and options in this price book not designated by an Assigned Program icon A will ship in **20 business days or less** after being acknowledged by Herman Miller.

Products and options designated by an A are on the assigned lead-time program and may ship in 20 days, less than 20 days, or more than 20 days from order acknowledgement.

Infrastructure

Power & Wire Management

Connect™

Surfaces

Screens

Hardware

Engage Leg, Desk End, Single

GNLFEL
GNLFER

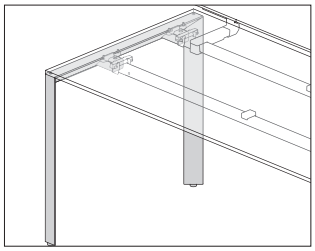

Product Information

Description

These single desk end legs provide support for individual tables or the ends of single-sided benches and returns. These fixed height legs provide 1¾″ of leveling adjustment.

Notes

Size of legs must match the depth of the surface being supported.

Dimensions

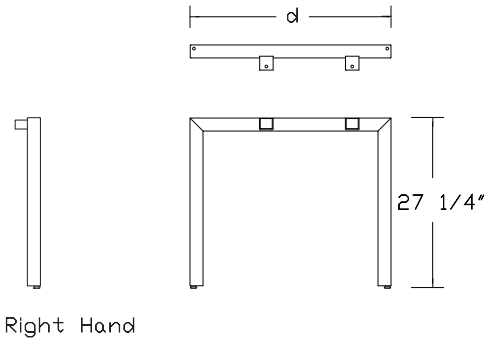

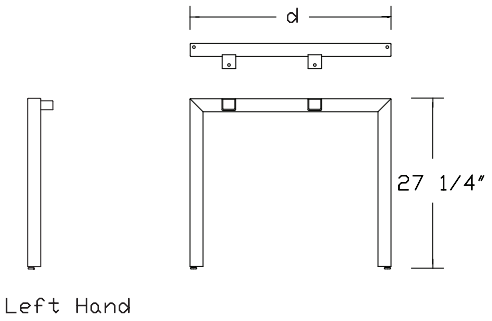

Specification Information

Step 1.

GN A

Step 2. Leg Type

LF fixed height A

Step 3. Application

EL. left hand A
ER. right hand A

Step 4. Depth

24 24″ deep A
30 30″ deep A
36 36″ deep A

Prices for Steps 1-4.

GNLFEL.	**24**	$249
	30	$253
	36	$257
GNLFER.	**24**	$249
	30	$253
	36	$257

Step 5. Leg Finish

91	white A	+$0
G1	graphite A	+$0
MS	metallic silver A	+$7

Engage Leg, Desk End, Double GNLFEN

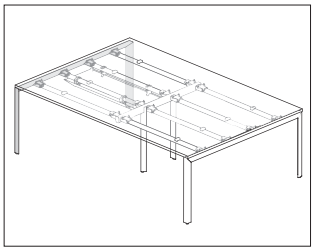

Product Information

Description

The double desk end leg provides support at either end of a back-to-back bench application, or a project table. This fixed height leg provides 1¾″ of leveling adjustment.

Notes

Size of the leg must match the combined depth of the 2 primary surfaces or 1 project table surface being supported.

Dimensions

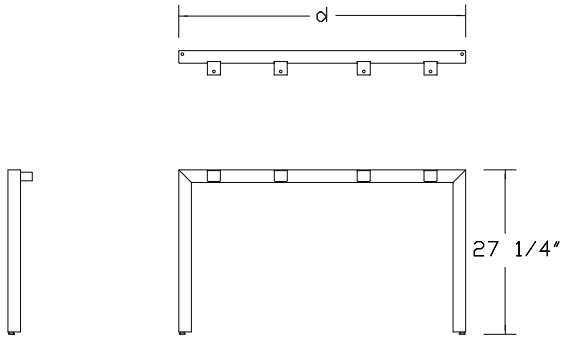

Specification Information

Step 1.

GN A

Step 2. Leg Type

LF	fixed height A

Step 3. Application

EN.	desk end double A

Step 4. Depth

48	48″ deep A
60	60″ deep A
72	72″ deep A

Prices for Steps 1-4.

GNLFEN.	**48**	$330
	60	$350
	72	$370

Step 5. Leg Finish

91	white A	+$0
G1	graphite A	+$0
MS	metallic silver A	+$7

Engage Leg, Intermediate Desk GNLFSN

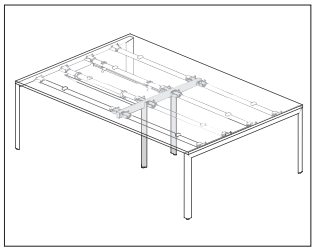

Product Information

Description

The intermediate desk leg provides support within single-sided, back-to-back bench or project table applications. This fixed height leg provides 1³/₄″ of leveling adjustment.

Notes

Size of the leg must match the depth of the surfaces being supported.

Dimensions

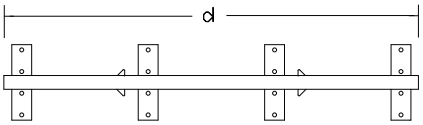

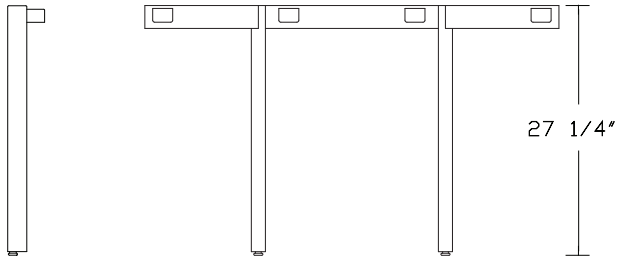

Specification Information

Step 1.

GN A

Step 2. Leg Type

LF	fixed height A	

Step 3. Application

SN.	intermediate desk A	

Step 4. Depth

24	24″ deep A	
30	30″ deep A	
36	36″ deep A	
48	48″ deep A	
60	60″ deep A	
72	72″ deep A	

Prices for Steps 1-4.

GNLFSN.	**24**	$270
	30	$275
	36	$280
	48	$345
	60	$360
	72	$370

Step 5. Leg Finish

91	white A	+$0
G1	graphite A	+$0
MS	metallic silver A	+$7

Engage Leg, Asymmetrical Desk End, Double

GNLFAL
GNLFAR

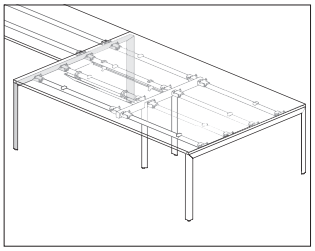

Product Information

Description

This leg supports an asymmetrical application, with a back-to-back application on 1 side of the leg and a single surface on the other side of the leg. It is fixed height, and provides 1¾″ of leveling adjustment.

Notes

Size of the leg must match the depth of the surfaces being supported.

Dimensions

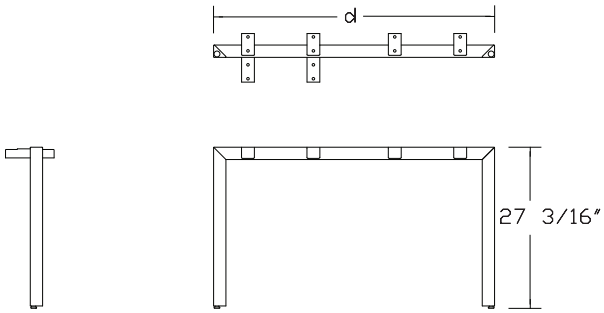

Right Hand

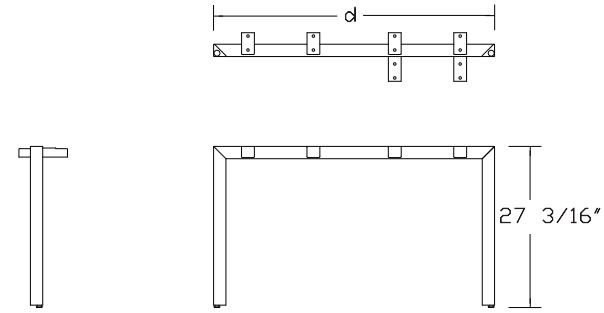

Left Hand

Specification Information

Step 1.

GN A

Step 2. Leg Type

LF	fixed height A

Step 3. Application

AL.	left hand A
AR.	right hand A

Step 4. Depth

48	48″ deep A
60	60″ deep A
72	72″ deep A

Prices for Steps 1-4.

GNLFAL.	**48**	$355
	60	$375
	72	$390
GNLFAR.	**48**	$355
	60	$375
	72	$390

Step 5. Leg Finish

91	white A	+$0
G1	graphite A	+$0
MS	metallic silver A	+$7

Engage Leg, Desk End Double, Meeting End

GNLFPN

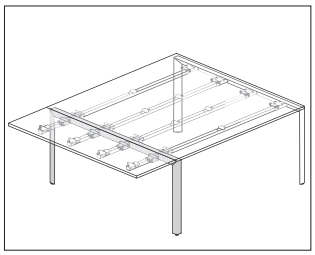

Product Information

Description

This leg supports the use of meeting end beams and surface at the end of a back-to-back bench.

Notes

Size of leg must match the combined depth of the 2 primary surfaces or 1 project table surface being supported.

Order meeting end beams (GNBM.) and surface (GNTDx.) separately.

Dimensions

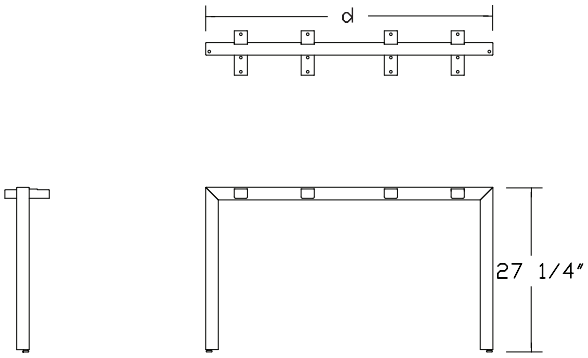

Specification Information

Step 1.

GN A

Step 2. Leg Type

LF	fixed height A	

Step 3. Application

PN.	meeting end A	

Step 4. Depth

48	48" deep A	
60	60" deep A	
72	72" deep A	

Prices for Steps 1-4.

GNLFPN.	**48**	$345
	60	$385
	72	$415

Step 5. Leg Finish

91	white A	+$0
G1	graphite A	+$0
MS	metallic silver A	+$7

Engage Leg, Corner Leg GNLFCN

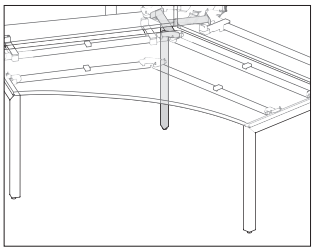

Product Information

Description

This leg provides support at the back corner of a 120° surface. It is fixed height, and provides 1 3/4″ of leveling adjustment.

Notes

Specify the leg based on the number of surfaces to be supported (GNLFCN.1 supports 1 surface, GNLFCN.2 supports 2 surfaces, and GNLFCN.3 supports 3 surfaces.).

Dimensions

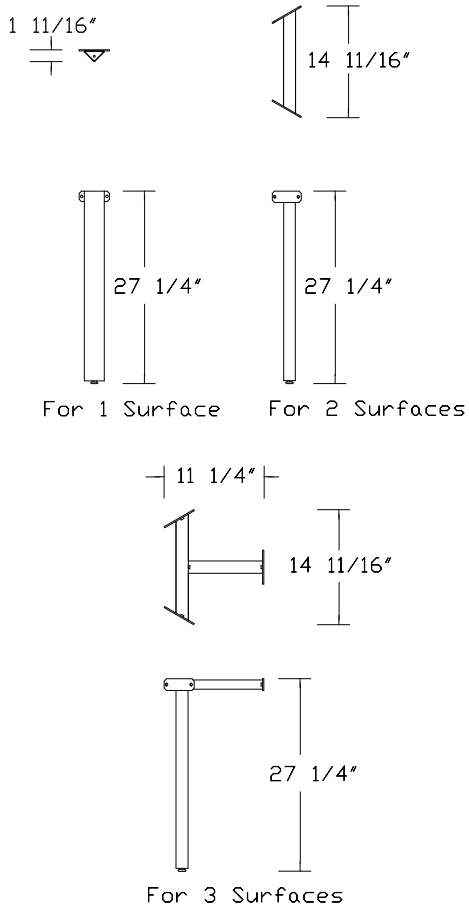

Specification Information

Step 1.

GN A

Step 2. Leg Type

LF	fixed height A	

Step 3. Application

CN.	corner leg A	

Step 4. Surface Quantity

1	supports one surface A	
2	supports two surfaces A	
3	supports three surfaces A	

Prices for Steps 1-4.

GNLFCN.	**1**	$84
	2	$150
	3	$200

Step 5. Leg Finish

91	white A	+$0
G1	graphite A	+$0
MS	metallic silver A	+$7

Engage Leg, Back-to-Back Bracing Leg GNLFBN

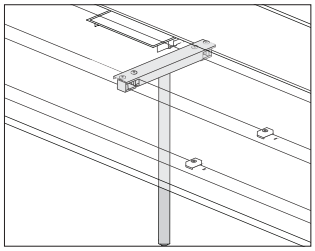

Product Information

Description

This stabilizer leg provides support within a back-to-back bench or project table application, where no intermediate leg is being used. This fixed height leg provides 1¾″ of leveling adjustment.

Notes

This leg is only required in a back-to-back or project table application when no intermediate leg is being used.

Dimensions

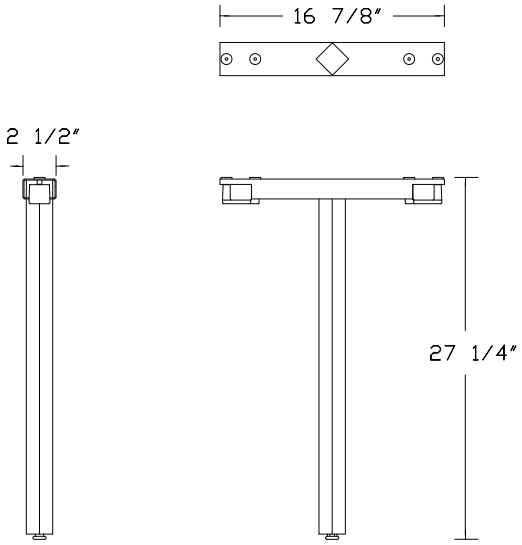

Specification Information

Step 1.

GN A

Step 2. Leg Type

LF	fixed height A	

Step 3. Application

BN.	back-to-back bracing leg A	

Prices for Steps 1-3.

GNLFBN.		$225

Step 4. Leg Finish

91	white A	+$0
G1	graphite A	+$0
MS	metallic silver A	+$7

Beams, Rectangular Primary GNBR.

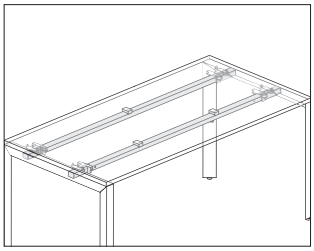

Product Information

Description

This pair of beams connects to end, asymmetrical, and intermediate Engage legs, and is required for the support of rectangular primary surfaces. Beams also provide attachment and support for cable management, screens, and other elements. Attachment hardware packs ordered separately.

Notes

To connect beams to fixed surfaces and legs, order hardware pack (GNHPF.). To connect beams to sliding surfaces and legs, order hardware pack (GNHPS.).

Dimensions

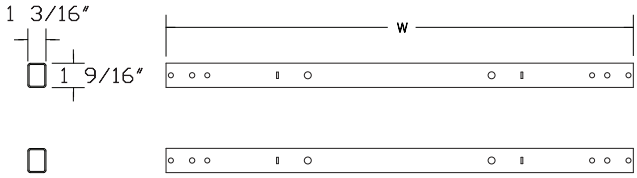

Specification Information

Step 1.

GNBR. A

Step 2. Width

36	36″ wide A
42	42″ wide A
48	48″ wide A
60	60″ wide A
72	72″ wide A

Prices for Steps 1-2.

GNBR.	**36**	$85
	42	$106
	48	$112
	60	$146
	72	$180

Beams, Rectangular Return

GNBA.
GNBB.
GNBC.

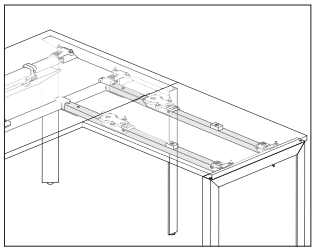

Product Information

Description

This pair of beams supports a return surface. It connects to a rectangular primary beam and a single desk end Engage leg. Beams also provide attachment and support for cable management, screens, and other elements. Attachment hardware packs ordered separately.

Notes

Specify beam type to match depth of primary surface to which it will be attached.

To connect beams to fixed surfaces and legs, order hardware pack (GNHSF.).

Dimensions

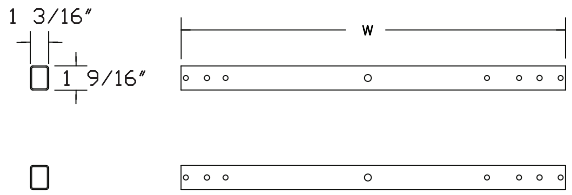

Specification Information

Step 1.

GNB A

Step 2. Attachment Depth

A. 24″ deep primary A
B. 30″ deep primary A
C. 36″ deep primary A

Step 3. Width

36 36″ wide A
42 42″ wide A
48 48″ wide A
60 60″ wide A
72 72″ wide A

Prices for Steps 1-3.

GNBA.	**36**	$90
	42	$116
	48	$122
	60	$136
	72	$153
GNBB.	**36**	$98
	42	$118
	48	$133
	60	$156
	72	$173
GNBC.	**36**	$105
	42	$121
	48	$144
	60	$173
	72	$193

Beams, Meeting End GNBM.

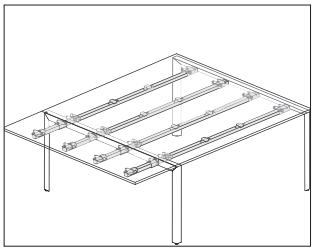

Product Information

Description

This pair of beams connects to a meeting end and intermediate Engage legs, and is required when specifying a meeting end surface across the end of a back-to-back configuration. Beams also provide attachment and support for cable management, screens, and other elements. Attachment hardware packs ordered separately.

Notes

Specify beam size to match the width of the adjacent rectangular primary surface.

To connect beams to fixed surfaces and legs, order hardware pack (GNHPF.). To connect beams to sliding surfaces and legs, order hardware pack (GNHPS.).

Specify 1 additional fixed attachment hardware pack (GNHPF.) per meeting end beam set to attach the meeting end surface.

Dimensions

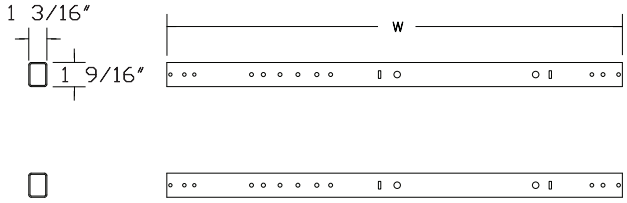

Specification Information

Step 1.

GNBM. A

Step 2. Width

48	48" wide A
60	60" wide A
72	72" wide A

Prices for Steps 1-2.

GNBM.	**48**	$165
	60	$200
	72	$207

Beams, 120°

GNBF.
GNBG.

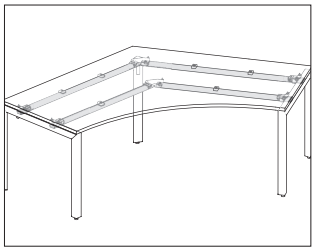

Product Information

Description

This set of beams connects to end or intermediate Engage legs, and a corner Engage leg, and is required for the support of a single 120° primary surface. Beams also provide attachment and support for cable management, screens, and other elements. Set includes 4 beams. Attachment hardware packs ordered separately.

Notes

Order corner leg (GNLFCN.) separately.

To connect beams to fixed surfaces and legs, order hardware pack (GNHDF.).

Dimensions

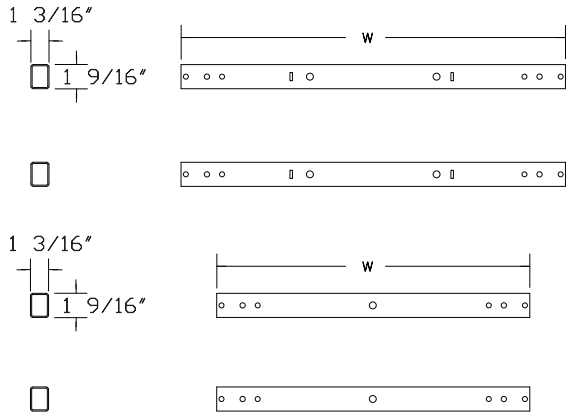

Specification Information

Step 1.

GNB A

Step 2. Depth

F. 24″ deep A
G. 30″ deep A

Step 3. Width

48 48″ wide A
60 60″ wide A

Prices for Steps 1-3.

GNBF.	**48**	$200
	60	$240
GNBG.	**48**	$200
	60	$240

Access Pass Thru GN1420

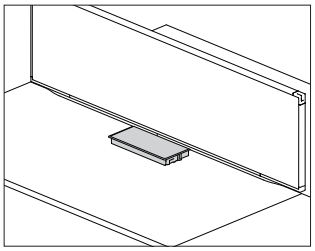

Product Information

Description

This metal pass thru fits inside an access cutout in the back edge of a Layout Studio® work surface. It includes a 3-sided frame and pivoting door, and provides access to the center channel within a back-to-back application.

Notes

Work surfaces must be ordered with access cutout or flash gap and access cutout.

Dimensions

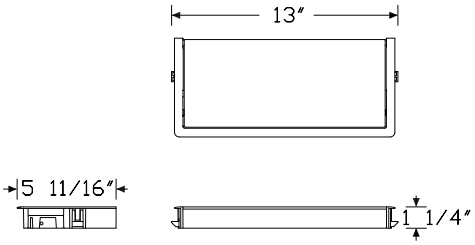

Specification Information

Step 1.

GN1420. A

Step 2. Configuration

X	six outlet opening A	

Prices for Steps 1-2.

GN1420. X		$160

Step 3. Finish

91	white A	+$0
G1	graphite A	+$0
MS	metallic silver A	+$2

Junction Block Attachment Bracket GNPA.

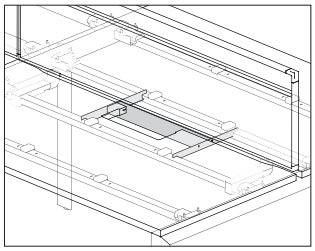

Product Information

Description

This painted steel bracket provides an attachment location for 1 junction block, centered on the rear beams of a table or bench application. Finish is cool grey neutral.

Notes

For double/back-to-back applications, order a Connect™ 4-circuit double back-to-back junction block (Y1358.DBB) separately.

For single-sided applications, order a Connect 4-circuit double junction block with flat attachment (Y1358.DHA) separately.

Dimensions

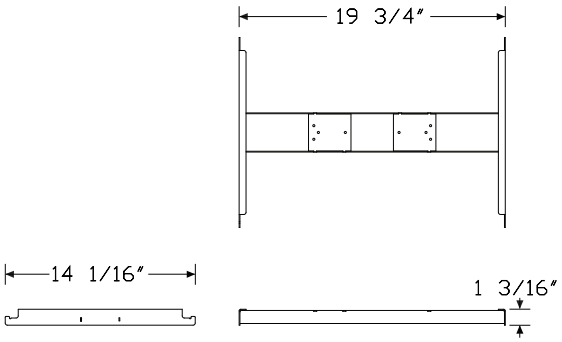

For Double/Back-to-Back Applications (D)

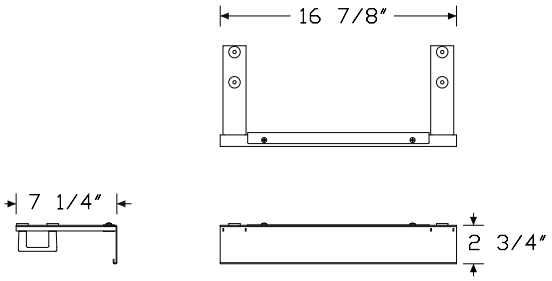

For Single-Sided Applications (S)

Specification Information

Step 1.

GNPA. A

Step 2. Application

D	double/back-to-back applications A
S	single-sided applications A

Prices for Steps 1-2.

GNPA.	**D**	$140
	S	$140

Floor Power Entry Cover GNPC.

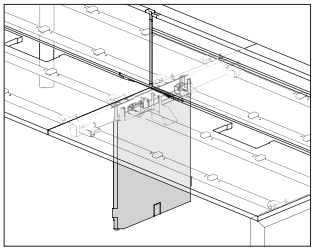

Product Information

Description

This painted metal cover encloses the open space located between the 2 legs of a Layout Studio® intermediate desk leg. It is used to conceal a floor power entry and/or cables from the floor to a wire management tray. Attachment hardware included.

Dimensions

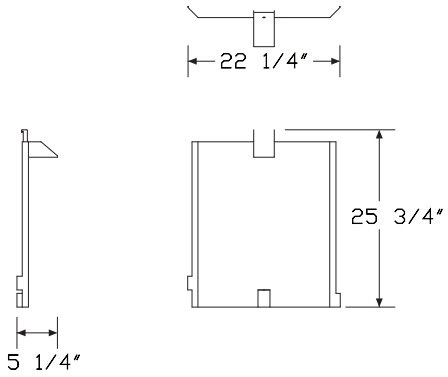

Specification Information

Step 1.

GNPC. A		$195

Step 2. Finish

91	white A	+$0
G1	graphite A	+$0
MS	metallic silver A	+$2

Harness Cover GNPH.

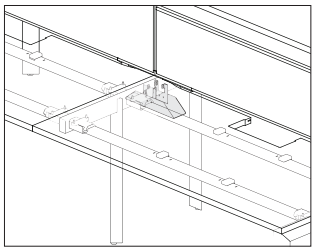

Product Information

Description

This cover provides a secure chase for the routing of a power harness between Layout Studio® wire management trays when UL1286 Listing is required.

Notes

Specify power harness separately.

Dimensions

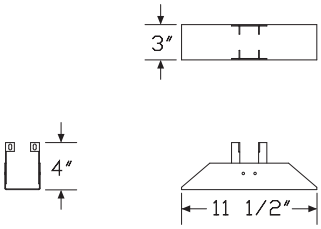

Specification Information

Step 1.

GNPH. A		$20

Step 2. Finish

91	white A	+$0
G1	graphite A	+$0
MS	metallic silver A	+$2

Wire Management Tray

GNWD.
GNWS.

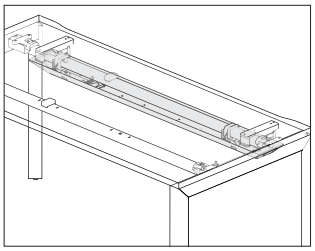

Product Information

Description

This painted steel tray provides a location to hold and manage power and voice/data cables within a Layout Studio® environment. Trays are available for both back-to-back and single-sided applications.

Notes

The double unit attaches directly to beams with included hardware.

The single unit attaches to beams, but also requires an additional bracket. For each single tray, order 2 generic beam clamps (GNSG.) separately. If a desk up or modesty screen is being used, the generic beam clamps are not required.

Specify tray width to match beam width.

For use with double tray, order optional cable management clips (GNWC.) separately.

To route power and/or data from the floor to a cable tray, order the umbilical riser (GNWF.T) separately.

Dimensions

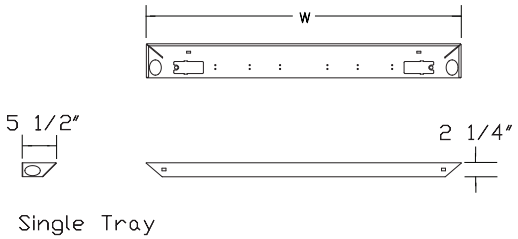

Single Tray

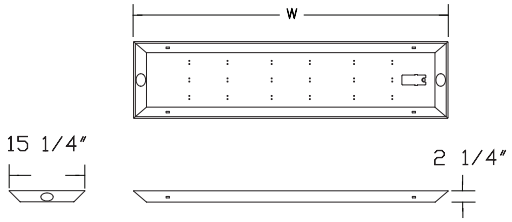

Double Tray

Specification Information

Step 1.

GN A

Step 2. Type

WS.	single A
WD.	double A

Step 3. Width

36	36" wide A
42	42" wide A
48	48" wide A
60	60" wide A
72	72" wide A

Prices for Steps 1-3.

GNWS.	**36**	$124
	42	$126
	48	$128
	60	$170
	72	$175
GNWD.	**36**	$117
	42	$121
	48	$125
	60	$155
	72	$160

Step 4. Finish

91	white A	+$0
G1	graphite A	+$0
MS	metallic silver A	+$7

Cable Management Clips - Double Tray

GNWC.

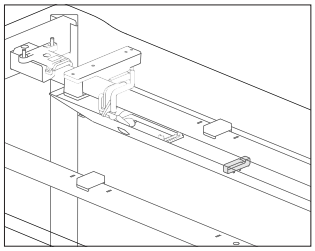

Product Information

Description

These clips attach into holes in the bottom of a double cable management tray to manage voice/data cables. Package includes 10 clips.

Dimensions

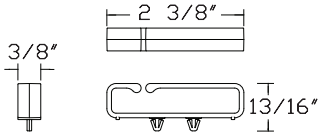

Specification Information

Step 1.

GNWC. A

Step 2. Quantity

10 10 per pack A

Prices for Steps 1-2.

GNWC. 10 $12

Umbilical Riser, Fixed Height GNWF.

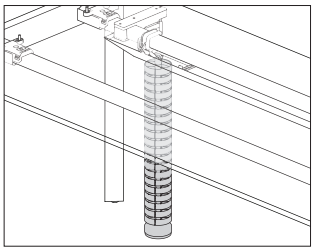

Product Information

Description

This umbilical riser routes power and/or data cables from the floor to the underside of a surface.

Notes

Umbilical riser finish corresponds to leg finish.

For data capacity, see cable management chart on Kiosk.

Dimensions

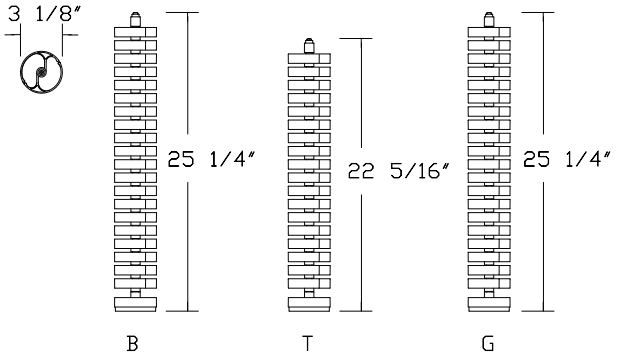

Specification Information

Step 1.

GN A

Step 2. Type

WF.	fixed height A	

Step 3. Attachment

B	beam attachment A	
T	tray attachment A	
G	generic attachment A	

Prices for Steps 1-3.

GNWF.	**B**	$71
	T	$64
	G	$77

Step 4. Finish

91	white A	+$0
G1	graphite A	+$0
MS	metallic silver A	+$0

Connect™-Junction Block, 4-Circuit

Y1358.

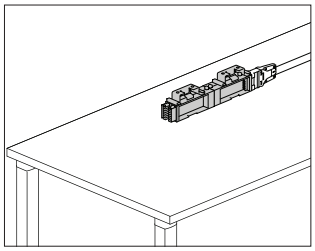

Product Information

Description

This block attaches beneath a desk or table and accepts 4-circuit receptacles for access and distribution of up to 4 20-amp circuits. It has connection points at both ends for attaching a power entry or 4-circuit power jumper. The block can be specified for 1 receptacle, 2 receptacles side-by-side, 2 receptacles back-to-back, or 4 receptacles; 2 side-by-side and 2 back-to-back. Finish is black. Attachment bracket and hardware included. UL 183 listed, CUL Certified.

Notes

Connect™ modular power products are not compatible with electrical components used in Herman Miller systems or desking product lines.

When routing power to an adjacent desk or table, surfaces must be ganged together. Order ganging bracket kit (Y1338.) separately.

To route power from building to junction block, order 4-circuit power entry (Y1351.) separately.

To route power between junction blocks, order junction block to junction block jumper, 4-circuit (Y1353.) separately.

To route power from a 36"-wide surface to an adjacent surface, specify double junction block option (DH) or double back-to-back junction block option (DB) and order power jumper (Y1353.) separately.

Order duplex receptacle, 4-circuit (Y1355.) separately.

To maintain proper spacing when specifying double junction block (Y1358.DH) or double back-to-back junction block (Y1358.DB), order adjustable jumpers (Y1353.xxxA) separately.

Dimensions

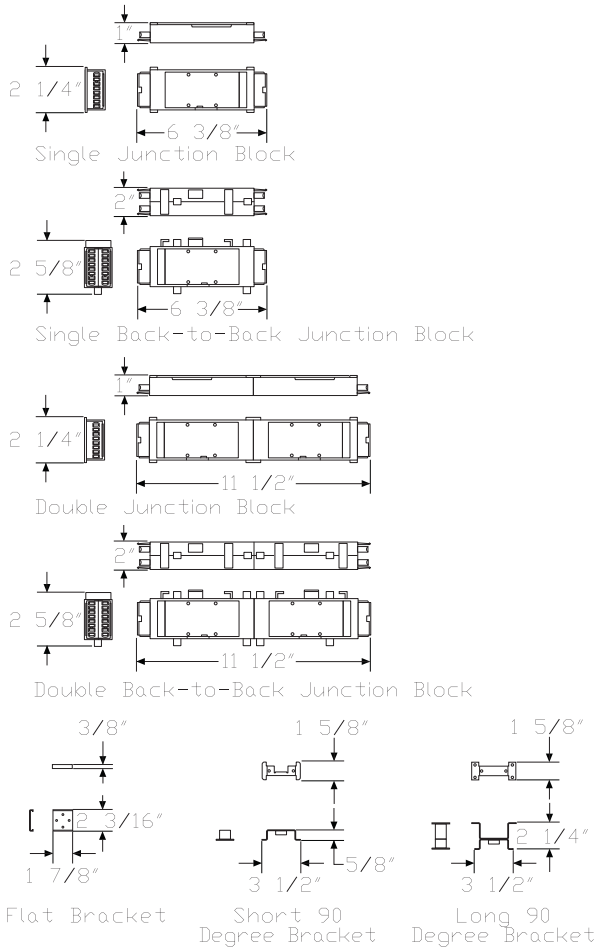

Connect™-Junction Block, 4-Circuit

continued

Specification Information

Step 1.

Y1358.

Step 2. Junction Block Type

SH	single junction block
SB	single back-to-back junction block
DH	double junction block
DB	double back-to-back junction block

Step 3. Attachment Hardware

For single junction block (SH) or double junction block (DH)

A	flat attachment to underside of surface
B	short 90° attachment to underside of surface
C	long 90° attachment to underside of surface

For single back-to-back junction block (SB) or double back-to-back junction block (DB)

B	short 90° attachment to underside of surface
C	long 90° attachment to underside of surface

Prices for Steps 1-3.

		A	B	C
Y1358.	**SH**	$82	88	88
	SB	—	$88	88
	DH	$66	72	72
	DB	—	$72	72

Connect™-Junction Block to Junction Block Jumper, 4-Circuit

Y1353.

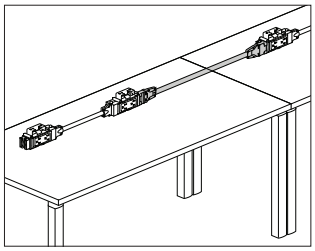

Product Information

Description

This power jumper distributes up to 4 20-amp circuits between 2 power kits or junction blocks and is available as adjustable or non-adjustable. The adjustable jumper allows 1 end of the jumper to extend an additional 3″ when connecting to components under an adjacent desk or table. UL 183 listed, CUL Certified.

Notes

Connect™ modular power products are not compatible with electrical components used in Herman Miller systems or desking product lines.

When routing power to an adjacent desk or table, surfaces must be ganged together. Order ganging bracket kit (Y1338.) separately.

When connecting dual junction block power kits (Y1350.) between adjacent surfaces in a linear run, specify 24″-wide jumper.

When connecting dual junction block power kits (Y1350.) at the outside corner of 2 24″-deep surfaces at 90°, specify 42″-wide jumper.

When connecting dual junction block power kits (Y1350.) at the outside corner of 2 30″-deep surfaces at 90°, specify 48″-wide jumper.

When connecting dual junction block power kits (Y1350.) at the outside corner of 1 30″-deep and 1 24″-deep surface, specify 48″-wide jumper.

When connecting dual junction block power kits (Y1350.) at the inside corner of 2 24″- or 30″-deep surfaces, specify 30″-wide jumper.

Finish on 5/8″ oval metallic conduit is silver.

Order the following products separately:

- Conduit clamps (Y1339.)
- Dual junction block power kit, 4-circuit (Y1350.) or junction block, 4-circuit (Y1358.)
- Duplex receptacle, 4-circuit (Y1355.) - for junction block, 4-circuit
- Junction block bracket, 4-circuit (Y1357.) - for junction block, 4-circuit
- Power entry, 4-circuit (Y1351.)

Dimensions

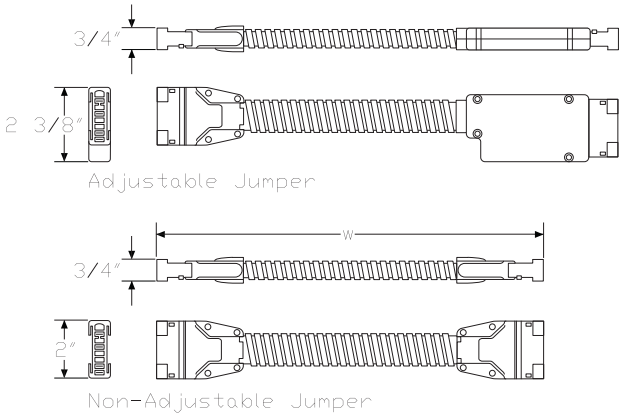

Connect™-Junction Block to Junction Block Jumper, 4-Circuit

continued

Specification Information

Step 1.

Y1353.

Step 2. Width

12	12″ wide
18	18″ wide
24	24″ wide
30	30″ wide
36	36″ wide
42	42″ wide
48	48″ wide
54	54″ wide
60	60″ wide
66	66″ wide
72	72″ wide
78	78″ wide
84	84″ wide
90	90″ wide
108	108″ wide
120	120″ wide
132	132″ wide
144	144″ wide

Step 3. Type

A	adjustable jumper
N	nonadjustable jumper

Prices for Steps 1-3.

		A	N
Y1353.	**12**	$73	73
	18	$78	78
	24	$83	83
	30	$89	89
	36	$94	94
	42	$99	99
	48	$105	105
	54	$110	110
	60	$115	115
	66	$120	120
	72	$125	125
	78	$131	131
	84	$136	136
	90	$142	142
	108	$157	157
	120	$167	167
	132	$179	179
	144	$189	189

Connect™-Duplex Receptacle, 4-Circuit Y1355.

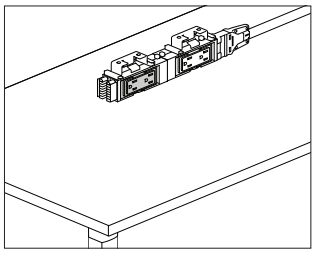

Product Information

Description

This 15- or 20-amp duplex receptacle attaches to a power kit or junction block to provide electrical access. Finish is black. UL 183 listed, CUL Certified.

Notes

Connect™ modular power products are not compatible with electrical components used in Herman Miller systems or desking product lines.

Receptacle is labeled as I, II, III, or IV for circuit identification.

Order the following products separately:

- Dual junction block power kit, 4-circuit (Y1350.)
- Junction block, 4-circuit (Y1358.)

Dimensions

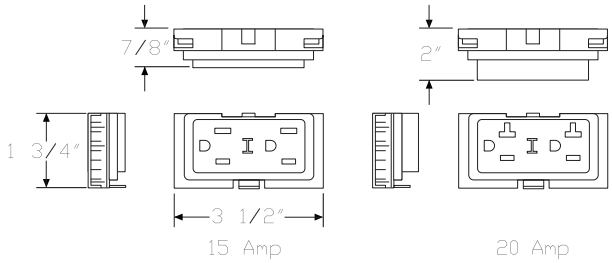

Specification Information

Step 1.

Y1355.

Step 2. Amps

15 15 amp

20 20 amp

Step 3. Circuit

1 circuit I

2 circuit II

3 circuit III

4 circuit IV

Prices for Steps 1-3.

		1	2	3	4
Y1355.	**15**	$22	22	22	22
	20	$26	26	26	26

Connect™-Power Entry, 4-Circuit Y1351.

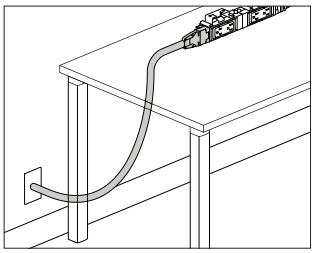

Product Information

Description

This power entry connects a building's electrical from a wall, floor, or column to the end of a 4-circuit dual junction block power kit or junction block and distributes up to 4 20-amp circuits. UL 183 listed, CUL Certified.

Notes

Connect™ modular power products are not compatible with electrical components used in Herman Miller systems or desking product lines.

Power entry can be field cut to the appropriate length.

For San Francisco, specify 3/8" flex metallic conduit option (C).

Finish color on liquid tight conduit is black. Finish color on metallic conduit is silver.

A licensed electrician must wire the power entry to the building's electrical system.

Dimensions

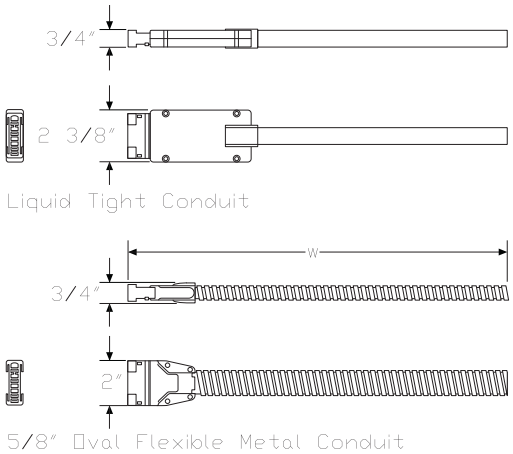

Specification Information

Step 1.

Y1351.

Step 2. Length

06	6' long
12	12' long
18	18' long
24	24' long

Step 3. Conduit Type

L	liquid tight conduit
C	3/8" flex metallic conduit

Prices for Steps 1-3.

		L	C
Y1351.	**06**	$144	144
	12	$206	206
	18	$270	270
	24	$345	345

Connect™-Block Connector, 4-Circuit

Y1354.

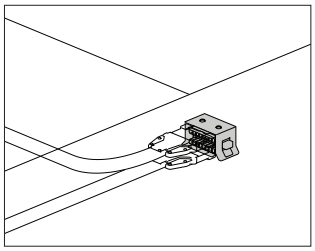

Product Information

Description

This block connects components together to distribute power. The H-block connector connects jumpers together at 2-, 3-, and 4-way connection points, or distributes power from a power entry to multiple components. The receptacle-to-receptacle connectors connect 2 junction blocks together. Finish is black. Attachment hardware included. UL 183 listed, CUL Certified.

Notes

Connect™ modular power products are not compatible with electrical components used in Herman Miller systems or desking product lines.

When routing power to an adjacent desk or table, surfaces must be ganged together. Order ganging bracket kit (Y1338.) separately.

Dimensions

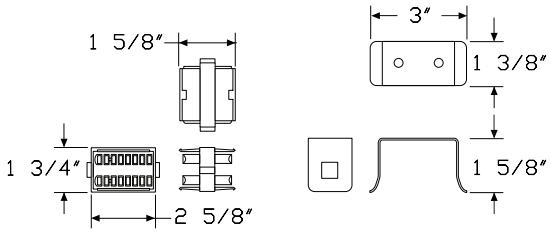

H-Block H-Block Bracket

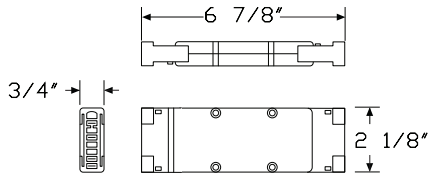

Receptacle-to-Receptacle Block Connector

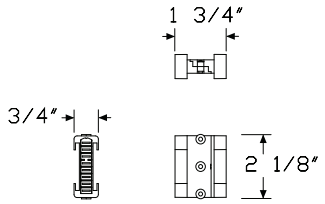

Short Receptacle-to-Receptacle Block Connector

Specification Information

Step 1.

Y1354.

Step 2. Connector Type

H	H-block connector
S	short receptacle-to-receptacle block connector A
R	receptacle-to-receptacle block connector

Prices for Steps 1-2.

Y1354.	**H**	$40
	S	$47
	R	$51

Connect™-S300 Y1323.

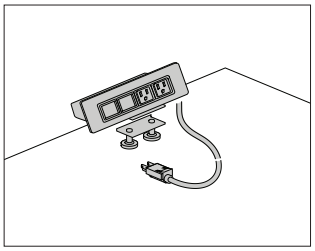

Product Information

Description

This electrical distributor can grommet-mount flush in a surface, or clamp-mount to the edge. It can be configured with 2 simplex receptacles and 2 data openings, or 3 simplex receptacles and 3 data openings. The distributor is available with a power cord with plug end, or electrical conduit for hardwire connection. A voice/data adapter kit is included, allowing the data openings to accept various manufacturers' couplers and jacks. Attachment hardware and cord/cable clips are also included. Product is UL listed.

Notes

Field cutting of surface may be required. Information on surface cutout size is included on instruction sheet.

Silver option (0I) and white option (0J) have painted metal trim with white plastic simplex/data interiors. Black option (0H) has black painted trim with black plastic simplex/data interior.

Overall width for distributor with 2 simplex receptacles, 2 data openings option (3) is 8″ wide. Overall width for distributor with 3 simplex receptacles, 3 data openings option (4) is 11″ wide.

Dimensions

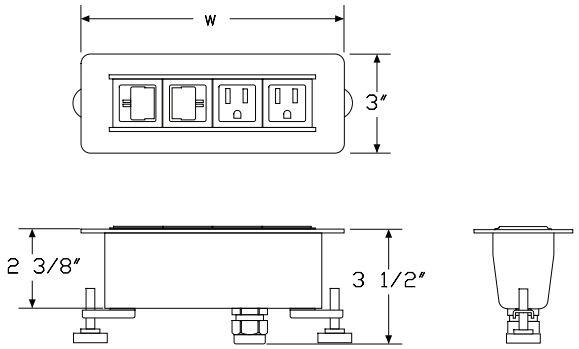

Specification Information

Step 1.

Y1323.

Step 2. Configuration

3	2 simplex receptacles, 2 data openings
4	3 simplex receptacles, 3 data openings

Step 3. Power Type

A	power cord with plug end
B	conduit with open end, for hard-wiring

Step 4. Cord/Conduit Length

03	3′ cord/conduit
06	6′ cord/conduit
10	10′ cord/conduit
20	20′ cord/conduit

Step 5. Attachment

G	grommet mount
S	surface clamp

Prices for Steps 1-5.

			03G	03S	06G	06S	10G	10S
Y1323.	**3**	**A**	$264	264	264	264	273	273
		B	$314	314	314	314	323	323
	4	**A**	$329	329	329	329	338	338
		B	$380	380	380	380	390	390

			20G	20S
Y1323.	**3**	**A**	$319	319
		B	$368	368
	4	**A**	$385	385
		B	$435	435

Step 6. Finish

0H	black	+$0
0I	silver	+$0
0J	white	+$0

Work Surface-Attached Electrical Distributor Y1314.

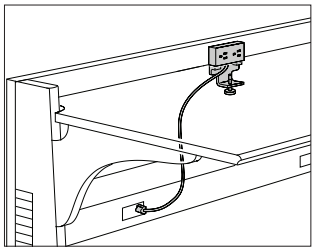

Product Information

Description

This 2-outlet electrical distributor attaches to the back edge of an Action Office® Series 2 squared-edge work surface, Ethospace® work surface without a cable management trough, or Passage® desk module. It provides electrical access at work surface height. Cord length is 8′. Finish is graphite. Attachment hardware is included.

Dimensions

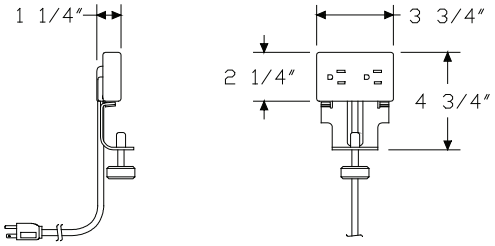

Specification Information

Step 1.

Y1314.	$180

Work Surface-Attached Voice/Data Outlet

Y1320.

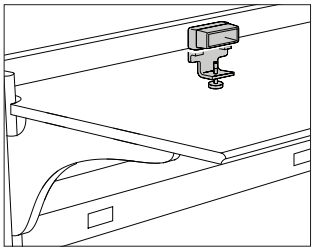

Product Information

Description

This outlet attaches to the back edge of an Action Office® Series 2 squared-edge work surface, Ethospace® work surface without a cable management trough, or Passage® desk module. It supports faceplates with voice/data ports at work surface height and has a furniture industry standard 1.38″ high × 2.69″ wide opening that accepts voice/data modules or faceplates from various manufacturers. Finish is graphite. Attachment hardware is included.

Dimensions

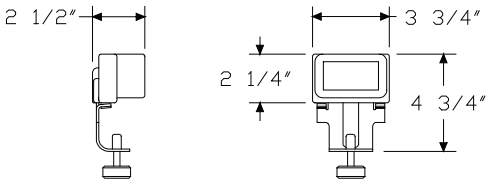

Specification Information

Step 1.

Y1320.	$109

Primary Work Surface, Rectangular

GNTRA.
GNTRB.
GNTRF.
GNTRN.

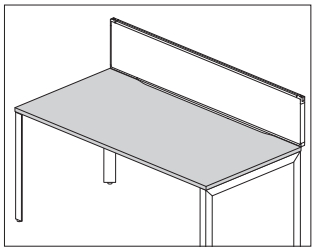

Product Information

Description

This squared-edge surface attaches to one set of primary beams and Engage legs in either a table, single-sided bench, or back-to-back bench application. It has a laminate top with thermoplastic edge, or a veneer top and edge. Surface is 1 1/8″ thick, and has 4 back edge options depending on application and access required.

Notes

When attaching a monitor arm or other item that clamps to the back edge of a surface, specify the flash gap (F) or flash gap and access cutout (B).

The flash gap is 0.6″ deep and starts 7 5/8″ from each end.

For surfaces with access cut-out, an access pass thru (GN1420.X) must be ordered separately. For surfaces 84″ and 96″ wide, 2 access pass thru's must be ordered.

Surfaces with a flash gap and access cutout (GNTRB.) are only available 48″ wide and wider.

Order attachment hardware pack (GNHPF., GNHPS.) separately.

Sliding surfaces are available for 30″ depth and 36″ - 72″ widths only. Order a rectangular primary surface sliding hardware pack (GNHPS.) separately.

For quick release attachment, order quick release attachment hardware pack (GNHPA.) separately, in addition to the fixed attachment hardware pack (GNHPF.).

Attaching clamp-on components to the back edge of a sliding surface may result in reduced surface extension.

Dimensions

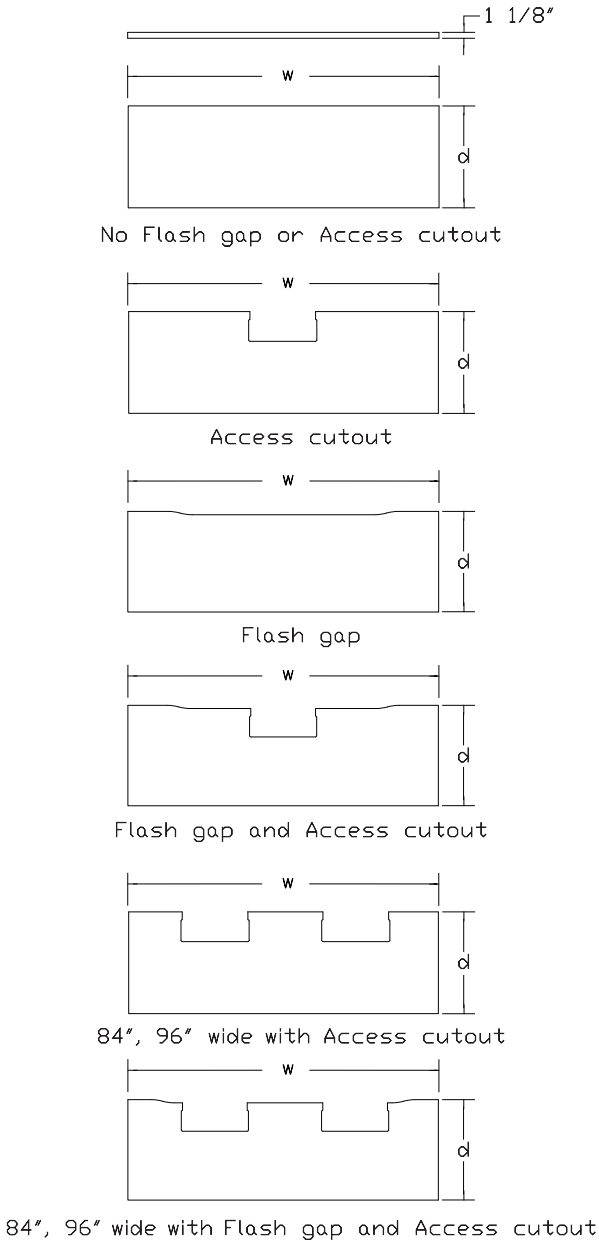

Primary Work Surface, Rectangular *continued*

Specification Information

Step 1.

GN A

Step 2. Type

TR rectangular primary worksurface A

Step 3. Access Detail

N. no flash gap or access cut-out A
A. access cut-out A
F. flash gap A
B. flash gap and access cut-out A

Step 4. Depth

24 24" deep A
30 30" deep A
36 36" deep A

Step 5. Width

For no flash gap or access cut-out (N.), access cut-out (A.), or flash gap (F.)

36 36" wide A
42 42" wide A
48 48" wide A
60 60" wide A
72 72" wide A
84 84" wide A
96 96" wide A

For flash gap and access cut-out (B.)

48 48" wide A
60 60" wide A
72 72" wide A
84 84" wide A
96 96" wide A

Step 6. Attachment

For 24" deep (24) or 36" deep (36) with 36" wide (36), 42" wide (42), 48" wide (48), 60" wide (60), 72" wide (72), 84" wide (84), or 96" wide (96)

F non-sliding A

For 30" deep (30) with 36" wide (36), 42" wide (42), 48" wide (48), 60" wide (60), or 72" wide (72)

F non-sliding A
S sliding A

For 30" deep (30) with 84" wide (84) or 96" wide (96)

F non-sliding A

Step 7. Surface Material

L laminate A
W veneer A

Prices for Steps 1-7.

		FL	FW	SL	SW
GNTRN.24	**36**	$116	212	—	—
	42	$130	236	—	—
	48	$144	260	—	—
	60	$178	317	—	—
	72	$217	388	—	—
	84	$289	509	—	—
	96	$317	557	—	—
30	**36**	$139	243	139	243
	42	$155	274	155	274
	48	$171	307	171	307
	60	$212	376	212	376
	72	$260	458	260	458
	84	$342	600	—	—
	96	$375	657	—	—
36	**36**	$164	295	—	—
	42	$183	328	—	—
	48	$202	359	—	—
	60	$248	438	—	—
	72	$303	533	—	—
	84	$399	699	—	—
	96	$437	764	—	—
GNTRA.24	**36**	$136	232	—	—
	42	$150	256	—	—
	48	$164	280	—	—
	60	$198	337	—	—
	72	$237	408	—	—
	84	$309	529	—	—
	96	$337	577	—	—

30	**36**	$159	263	159	263
	42	$175	294	175	294
	48	$191	327	191	327
	60	$232	396	232	396
	72	$280	478	280	478
	84	$362	620	—	—
	96	$395	677	—	—
36	**36**	$184	315	—	—
	42	$203	348	—	—
	48	$222	379	—	—
	60	$268	458	—	—
	72	$323	553	—	—
	84	$419	719	—	—
	96	$457	784	—	—
GNTRF.	**24 36**	$156	252	—	—
	42	$170	276	—	—
	48	$184	300	—	—
	60	$218	357	—	—
	72	$257	428	—	—
	84	$329	549	—	—
	96	$357	597	—	—
30	**36**	$179	283	179	283
	42	$195	314	195	314
	48	$211	347	211	347
	60	$252	416	252	416
	72	$300	498	300	498
	84	$382	640	—	—
	96	$415	697	—	—
36	**36**	$204	335	—	—
	42	$223	368	—	—
	48	$242	399	—	—
	60	$288	478	—	—
	72	$343	573	—	—
	84	$439	739	—	—
	96	$477	804	—	—
GNTRB.	**24 48**	$204	320	—	—
	60	$238	377	—	—
	72	$277	448	—	—
	84	$349	569	—	—
	96	$377	617	—	—
30	**48**	$231	367	231	367
	60	$272	436	272	436
	72	$320	518	320	518
	84	$402	660	—	—
	96	$435	717	—	—
36	**48**	$262	419	—	—
	60	$308	498	—	—
	72	$363	593	—	—
	84	$459	759	—	—
	96	$497	824	—	—

Step 8. Surface Finish

Linen Laminate

For laminate (L)

LBM	crisp linen A	+$0
LBN	classic linen A	+$0
LBP	casual linen A	+$0

Mesh Laminate

For laminate (L)

LBK	pewter mesh A	+$0
LBL	steel mesh A	+$0

Solid-Color Laminate Top/Thermoplastic Edge

For laminate (L)

8Q	folkstone grey A	+$0
91	white A	+$0
98	studio white A	+$0

Twill Laminate

For laminate (L)

LBF	neutral twill A	+$0
LBG	sarum twill A	+$0
LBH	earthen twill A	+$0
LBJ	graphite twill A	+$0
LBQ	white twill A	+$0

Wood-Grain Laminate Top/Thermoplastic Edge

For laminate (L)

HM	natural maple A	+$0
HP	light anigre A	+$0
76	light brown walnut A	+$60
HX	aged cherry A	+$60
HY	walnut on cherry A	+$60
LBA	clear on ash A	+$0
LBB	oak on ash A	+$0
LBC	walnut on ash A	+$0
LBE	medium red walnut A	+$0
LBD	dark brown walnut A	+$0

Primary Work Surface, Rectangular *continued*

Wood Veneer		
For veneer (W)		
2U	light brown walnut A	+$55
40	dark brown walnut A	+$55
ET	clear on ash A	+$55
EU	oak on ash A	+$55
EV	walnut on ash A	+$55

Return Work Surface, Rectangular

GNTSN.

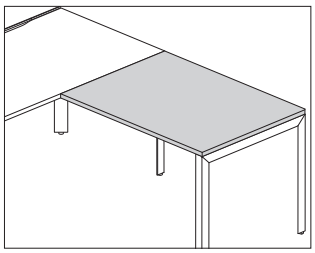

Product Information

Description

This squared-edge surface attaches to one set of return beams and an Engage leg to create a return. It has a laminate top with thermoplastic edge, or a veneer top and edge. Surface is 1 1/8″ thick.

Notes

When using a screen along the back edge of the surface, items that clamp to the back edge of the surface cannot be used.

Order fixed attachment hardware pack (GNHSF.) separately.

For quick release attachment, order quick release attachment hardware pack (GNHPA.) separately, in addition to the fixed attachment hardware pack (GNHSF.).

Dimensions

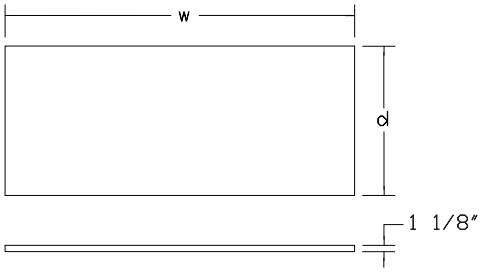

Specification Information

Step 1.

GN A

Step 2. Type

TS rectangular return worksurface A

Step 3. Access Detail

N. no flash gap or access cut-out A

Step 4. Depth

24 24″ deep A

Step 5. Width

36 36″ wide A
42 42″ wide A
48 48″ wide A
60 60″ wide A
72 72″ wide A

Step 6. Attachment

F non-sliding A

Step 7. Surface Material

L laminate A
W veneer A

Prices for Steps 1-7.

		FL	FW
GNTSN.24	**36**	$135	234
	42	$151	258
	48	$165	282
	60	$182	334
	72	$235	406

Step 8. Surface Finish

Linen Laminate

For laminate (L)

LBM	crisp linen A	+$0
LBN	classic linen A	+$0
LBP	casual linen A	+$0

Mesh Laminate

For laminate (L)

LBK	pewter mesh A	+$0
LBL	steel mesh A	+$0

Return Work Surface, Rectangular

continued

Solid-Color Laminate Top/Thermoplastic Edge		
For laminate (L)		
8Q	folkstone grey A	+$0
91	white A	+$0
98	studio white A	+$0

Twill Laminate		
For laminate (L)		
LBF	neutral twill A	+$0
LBG	sarum twill A	+$0
LBH	earthen twill A	+$0
LBJ	graphite twill A	+$0
LBQ	white twill A	+$0

Wood-Grain Laminate Top/Thermoplastic Edge		
For laminate (L)		
HM	natural maple A	+$0
HP	light anigre A	+$0
76	light brown walnut A	+$60
HX	aged cherry A	+$60
HY	walnut on cherry A	+$60
LBA	clear on ash A	+$0
LBB	oak on ash A	+$0
LBC	walnut on ash A	+$0
LBE	medium red walnut A	+$0
LBD	dark brown walnut A	+$0

Wood Veneer		
2U	light brown walnut A	+$55
40	dark brown walnut A	+$55
ET	clear on ash A	+$55
EU	oak on ash A	+$55
EV	walnut on ash A	+$55

Project Table, Rectangular

GNTPA.
GNTPN.

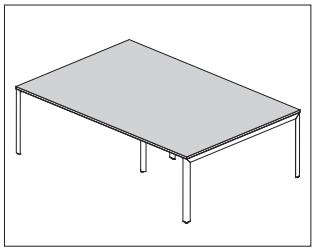

Product Information

Description

This squared-edge surface attaches to primary beams and Engage legs to create a freestanding table. It has a laminate top with thermoplastic edge, or a veneer top and edge. Surface is 1 1/8″ thick.

Notes

2 or more sets of beams (GNBR.) are required per surface. Order separately.

Tables must include at least 1 intermediate leg (GNLFSN.).

48″- and 60″-wide surfaces cannot be used as individual tables. They must be used as part of a larger project table.

For surface widths of 84″ and 96″, an intermediate leg (GNLFSN.) must be specified, along with half-length beams.

For surfaces with access cut-out, a 5-outlet Logic grommet mounted electrical distributor (Y1425.C or Y1425.F) or Logic grommet pass thru (Y1420.V) must be ordered separately.

For surfaces with access cutout and widths of 72″, 84″ or 96″, 2 access cut-outs are included.

Order attachment hardware pack (GNHPF.) separately.

Dimensions

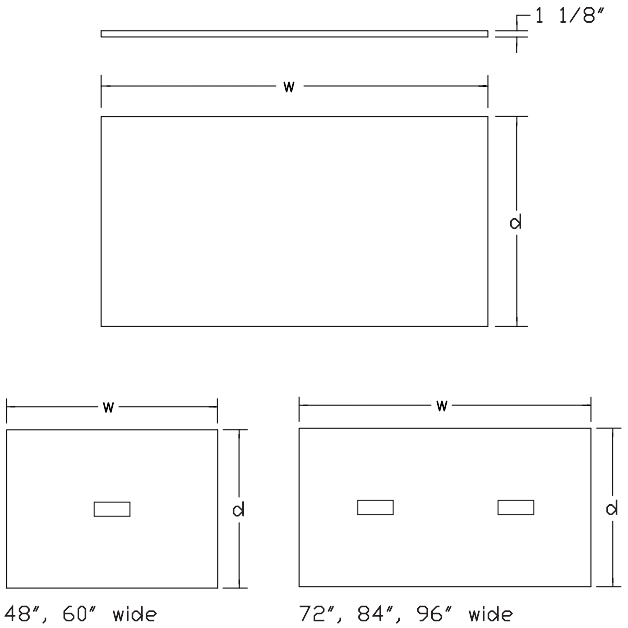

Specification Information

Step 1.

GN A

Step 2. Type

TP rectangular project table A

Step 3. Access Detail

N. no access cut-out A

A. access cut-out A

Step 4. Depth

48 48″ deep A

60 60″ deep A

Step 5. Width

For 48″ deep (48)

48 48″ wide A

60 60″ wide A

72 72″ wide A

84 84″ wide A

96 96″ wide A

For 60″ deep (60)

60 60″ wide A

72 72″ wide A

84 84″ wide A

96 96″ wide A

Step 6. Attachment

F non-sliding A

Step 7. Surface Material

L laminate A

W veneer A

Prices for Steps 1-7.

		FL	FW
GNTPN.48	**48**	$302	523
	60	$360	621
	72	$437	748
	84	$545	968
	96	$621	1085

	60 60	$527	909
	72	$599	1029
	84	$774	1339
	96	$878	1429
GNTPA. 48	**48**	$342	563
	60	$400	661
	72	$477	788
	84	$625	1048
	96	$701	1165
	60 60	$567	949
	72	$639	1069
	84	$854	1419
	96	$958	1509

Step 8. Surface Finish

Linen Laminate

For laminate (L)

LBM	crisp linen A	+$0
LBN	classic linen A	+$0
LBP	casual linen A	+$0

Mesh Laminate

For laminate (L)

LBK	pewter mesh A	+$0
LBL	steel mesh A	+$0

Solid-Color Laminate Top/Thermoplastic Edge

For laminate (L)

8Q	folkstone grey A	+$0
91	white A	+$0
98	studio white A	+$0

Twill Laminate

For laminate (L)

LBF	neutral twill A	+$0
LBG	sarum twill A	+$0
LBH	earthen twill A	+$0
LBJ	graphite twill A	+$0
LBQ	white twill A	+$0

Wood-Grain Laminate Top/Thermoplastic Edge

For laminate (L)

HM	natural maple A	+$0
HP	light anigre A	+$0
76	light brown walnut A	+$60
HX	aged cherry A	+$60
HY	walnut on cherry A	+$60
LBA	clear on ash A	+$0
LBB	oak on ash A	+$0
LBC	walnut on ash A	+$0
LBE	medium red walnut A	+$0
LBD	dark brown walnut A	+$0

Wood Veneer

For veneer (W)

2U	light brown walnut A	+$55
40	dark brown walnut A	+$55
ET	clear on ash A	+$55
EU	oak on ash A	+$55
EV	walnut on ash A	+$55

Meeting End, Rectangular

GNTDG.
GNTDN.

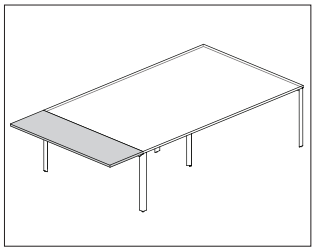

Product Information

Description

This 20″-deep squared-edge surface attaches to 2 sets of meeting end beams positioned at the end of a back-to-back bench application to create a meeting space. It has a laminate top with thermoplastic edge, or a veneer top and edge. An optional grommet cut-out and grommet is available. Surface is 1⅛″ thick.

Notes

Grommet color matches the laminate color for solid color laminates, and is graphite for all other laminates and veneers.

For each meeting end surface, order 2 fixed attachment hardware packs (GNHPF.) separately.

Dimensions

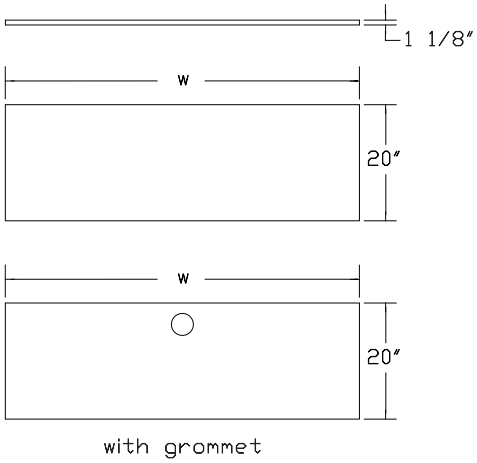

Specification Information

Step 1.

GN A

Step 2. Type

TD rectangular meeting end A

Step 3. Access Detail

N. no access cut-out A
G. grommet A

Step 4. Depth

20 20″ deep A

Step 5. Width

48 48″ wide A
60 60″ wide A
72 72″ wide A

Step 6. Attachment

F non-sliding A

Step 7. Surface Material

L laminate A
W veneer A

Prices for Steps 1-7.

		FL	FW
GNTDN.20	**48**	$154	263
	60	$181	325
	72	$224	388
GNTDG.20	**48**	$172	281
	60	$199	343
	72	$242	406

Step 8. Surface Finish

Linen Laminate

For laminate (L)

LBM	crisp linen A	+$0
LBN	classic linen A	+$0
LBP	casual linen A	+$0

Mesh Laminate

For laminate (L)

LBK	pewter mesh A	+$0
LBL	steel mesh A	+$0

Solid-Color Laminate Top/Thermoplastic Edge

For laminate (L)

8Q	folkstone grey A	+$0
91	white A	+$0
98	studio white A	+$0

Twill Laminate

For laminate (L)

LBF	neutral twill A	+$0
LBG	sarum twill A	+$0
LBH	earthen twill A	+$0
LBJ	graphite twill A	+$0
LBQ	white twill A	+$0

Wood-Grain Laminate Top/Thermoplastic Edge

For laminate (L)

HM	natural maple A	+$0
HP	light anigre A	+$0
76	light brown walnut A	+$60
HX	aged cherry A	+$60
HY	walnut on cherry A	+$60
LBA	clear on ash A	+$0
LBB	oak on ash A	+$0
LBC	walnut on ash A	+$0
LBE	medium red walnut A	+$0
LBD	dark brown walnut A	+$0

Wood Veneer

For veneer (W)

2U	light brown walnut A	+$55
40	dark brown walnut A	+$55
ET	clear on ash A	+$55
EU	oak on ash A	+$55
EV	walnut on ash A	+$55

Primary Work Surface, 120°

GNTAA.
GNTAB.
GNTAF.
GNTAN.

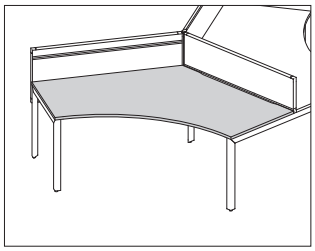

Product Information

Description

This squared-edge surface attaches to one set of 120° beams and Engage legs. It has a laminate top with thermoplastic edge, or a veneer top and edge. Surface is 1 1/8″ thick, and has 4 back edge options depending on application and access required.

Notes

When attaching a monitor arm or other item that clamps to the back edge of a surface, specify the flash gap (F) or flash gap and access cutout (B).

The flash gap is 0.6″ deep and starts 7 5/8″ from each end. It is located on both wings of the surface.

Access cutout is specified on the left or right wing. For surfaces with access cut-out, an access pass thru (GN1420.X) must be ordered separately.

Order fixed attachment hardware pack (GNHDF.) separately.

For quick release attachment, order quick release attachment hardware pack (GNHDA.) separately, in addition to the fixed attachment hardware pack (GNHDF.).

Dimensions

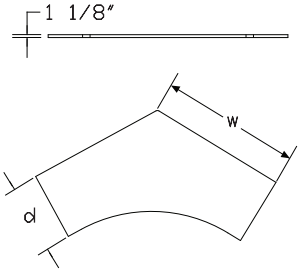

No Flash gap or Access cutout

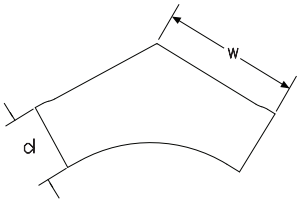

Flash gap

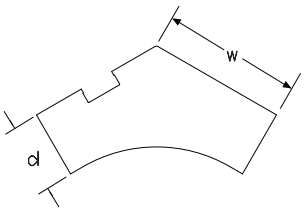

Access cutout (Left Hand Version)

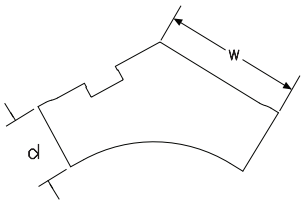

Flash gap and Access cutout
(Left Hand Version)

Specification Information

Step 1.

GN A

Step 2. Type

TA 120° primary surface A

Step 3. Access Detail

N. no flash gap or access cut-out A
A. access cut-out A
F. flash gap A
B. flash gap and access cut-out A

Step 4. Depth

24 24″ deep A
30 30″ deep A

Step 5. Width

48 48″ wide A
60 60″ wide A

Step 6. Attachment

For no flash gap or access cut-out (N.) or flash gap (F.)

F no access cutout, non-sliding A

For access cut-out (A.) or flash gap and access cut-out (B.)

L left-hand access, non-sliding A
R right-hand access, non-sliding A

Step 7. Surface Material

L laminate A
W veneer A

Prices for Steps 1-7.

		FL	FW	LL	LW	RL	RW
GNTAN. 24	**48**	$418	730	—	—	—	—
	60	$454	788	—	—	—	—
30	**48**	$428	748	—	—	—	—
	60	$464	806	—	—	—	—
GNTAA. 24	**48**	—	—	$438	750	438	750
	60	—	—	$474	808	474	808
30	**48**	—	—	$448	768	448	768
	60	—	—	$484	826	484	826
GNTAF. 24	**48**	$458	770	—	—	—	—
	60	$494	828	—	—	—	—
30	**48**	$468	788	—	—	—	—
	60	$504	846	—	—	—	—
GNTAB. 24	**48**	—	—	$478	790	478	790
	60	—	—	$514	848	514	848
30	**48**	—	—	$488	808	488	808
	60	—	—	$524	866	524	866

Step 8. Surface Finish

Linen Laminate

For laminate (L)

LBM crisp linen A +$0
LBN classic linen A +$0
LBP casual linen A +$0

Mesh Laminate

For laminate (L)

LBK pewter mesh A +$0
LBL steel mesh A +$0

Solid-Color Laminate Top/Thermoplastic Edge

For laminate (L)

8Q folkstone grey A +$0
91 white A +$0
98 studio white A +$0

Twill Laminate

For laminate (L)

LBF neutral twill A +$0
LBG sarum twill A +$0
LBH earthen twill A +$0
LBJ graphite twill A +$0
LBQ white twill A +$0

Wood-Grain Laminate Top/Thermoplastic Edge		
For laminate (L)		
HM	natural maple A	+$0
HP	light anigre A	+$0
76	light brown walnut A	+$60
HX	aged cherry A	+$60
HY	walnut on cherry A	+$60
LBA	clear on ash A	+$0
LBB	oak on ash A	+$0
LBC	walnut on ash A	+$0
LBE	medium red walnut A	+$0
LBD	dark brown walnut A	+$0

Wood Veneer		
For veneer (W)		
2U	light brown walnut A	+$55
40	dark brown walnut A	+$55
ET	clear on ash A	+$55
EU	oak on ash A	+$55
EV	walnut on ash A	+$55

Hardware Pack, Fixed Surfaces

GNHDF.
GNHPF.
GNHSF.

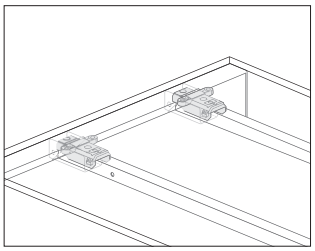

Product Information

Description

This hardware pack is required in order to connect a set of beams to a pair of Engage legs, and to provide a fixed attachment of a surface.

Notes

1 hardware pack is required for each beam kit specified. Meeting end surfaces (GNTDG., GNTDN.) require an additional 2 rectangular primary hardware packs (GNHPF.) per surface.

For meeting end surfaces, order an additional hardware pack (GNHPF.) per meeting end beam set.

For quick release attachment, a quick release hardware pack (GNHPA., GNHDA.) can be added. Specify 1 hardware pack for each beam kit.

Specification Information

Step 1.

GNH A

Step 2. Type

PF.	rectangular primary A
DF.	120° - primary A
SF.	return A

Prices for Steps 1-2.

GNHPF.	$44
GNHDF.	$80
GNHSF.	$124

Hardware Pack, Quick Release Attachment

GNHDA.
GNHPA.

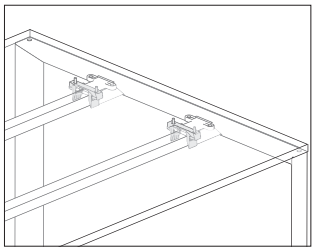

Product Information

Description

This hardware pack provides for the attachment and removal of surfaces without the use of any tools.

Notes

Specify 1 quick release hardware pack for each fixed attachment hardware pack (GNHDF., GNHPF., GNHSF.) specified.

Dimensions

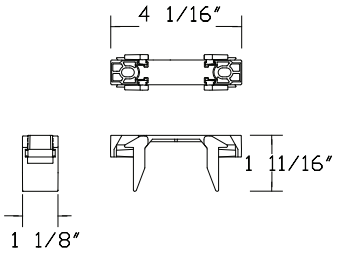

Specification Information

Step 1.

GNH A

Step 2. Type

PA. rectangular surface A

DA. 120° surface A

Prices for Steps 1-2.

GNHPA.	$15
GNHDA.	$23

Hardware Pack, Sliding, Rectangular Primary Surface

GNHPS.

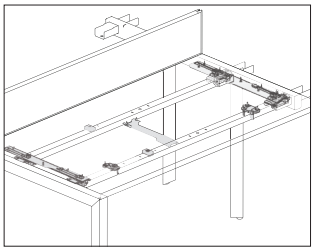

Product Information

Description

This hardware pack attaches a 30"-deep rectangular primary surface to a set of beams and allows the surface to slide, providing access to a cable management tray.

Notes

Must be used with surfaces specified as sliding.

Specify 1 hardware pack for each sliding surface.

Attaching clamp-on components to the back edge of a sliding surface may result in reduced surface extension.

Dimensions

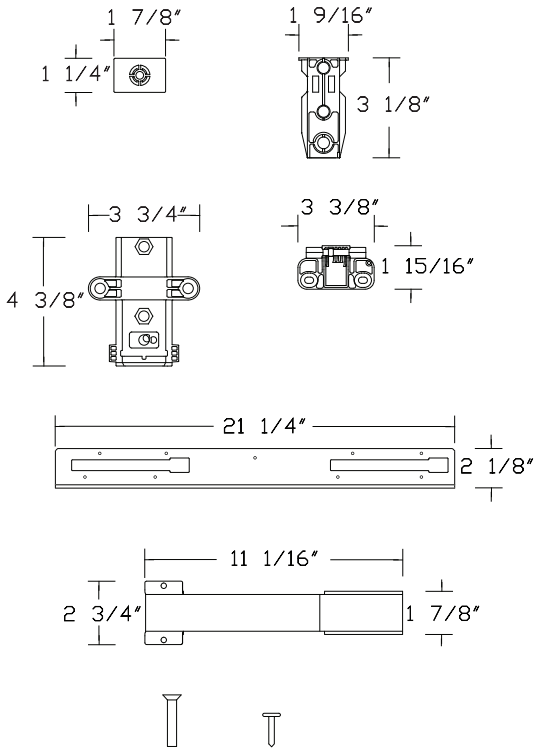

Specification Information

Step 1.

GNHPS. A $178

Screen - Desk Up - Fabric

GNSDFT
GNSDNT
GNSDTT

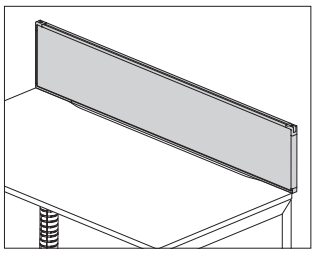

Product Information

Description

This fabric screen provides boundary above a surface at the back edge of a work surface. It is tackable, has a painted metal frame, and provides varying levels of work tool attachment.

The screen can be placed most anywhere along the beam and does not need to match beam widths.

Notes

Screen attaches to rear beam with brackets. Order desk up attachment brackets (GNSA.) separately.

For top rail and face rail hanging screens, levelers should be applied to each work tool to ensure that the tool hangs properly. Each screen ships with enough levelers for 4 work tools. Additional levelers are available as a service part (U1BDV55).

For top rail and face rail hanging screens, a maximum of 2 work tools can be used per side.

For top rail and face rail hanging screens, see Layout Studio planning guide for work tool compatibility.

Order the following finishing hardware and connectors separately:

- Connector finishing kit (GNSE.)
- In-line connector kit (GNSH.)
- Post connector kit (GNSJ.)

When used in a back-to-back application, the screen is shared.

All fabric is railroaded.

Screen accepts Customer's Own Material (COM). Yardage is estimated for nondirectional 54"-wide fabrics.

Width—Yardage
36—1.23
42—1.41
48—1.61
60—1.99
72—2.37

For information on multiple quantities or directional fabrics, contact COM Department. See Order Information in Appendices.

Dimensions

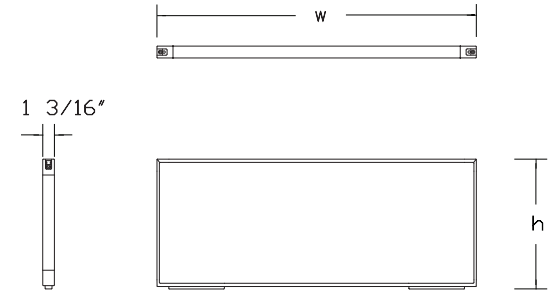

Non Hanging

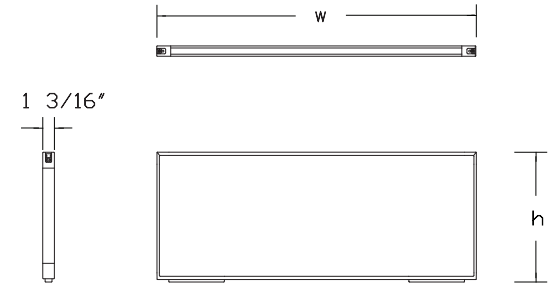

Top Rail Hanging

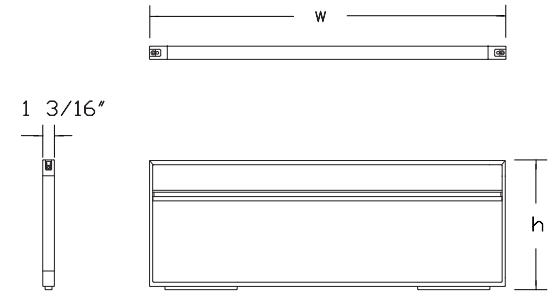

Face Rail Hanging

Specification Information

Step 1.

GN A

Step 2. Type

SD desk up A

Step 3. Configuration

N non hanging A
T top rail hanging A
F face rail hanging A

Step 4. Material

T. tackable fabric A

Step 5. Height

42 42" high A
46 46" high A

Step 6. Width

36 36" wide A
42 42" wide A
48 48" wide A
60 60" wide A
72 72" wide A

Prices for Steps 1-6.

		36	42	48	60	72
GNSDNT.	**42**	$430	481	506	575	644
	46	$444	494	519	594	663
GNSDTT.	**42**	$430	481	506	575	644
	46	$444	494	519	594	663
GNSDFT.	**42**	$500	563	620	675	825
	46	$513	579	640	690	843

Step 7. Trim Finish

91 white A +$0
G1 graphite A +$0
MS metallic silver A +$7

Step 8. Surface Finish

See application chart and textiles list for fabric usage and numbers. First 2 digits of number indicate fabric line; remaining digit(s) indicate fabric color.

Price Category 1	+$0
Price Category 2	+$6
Price Category 3	+$10
Price Category 4	+$21

Screen - Desk Up, Glass GNSDXG

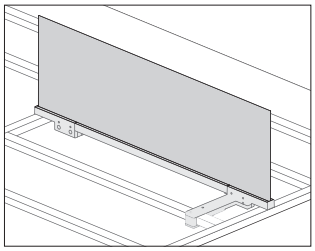

Product Information

Description

This frameless glass screen provides boundary above a surface at the back edge of a work surface in a back-to-back application. It has a painted metal frame. Attachment hardware included.

Notes

Screen attaches to rear beam with brackets supplied with screen. No additional hardware is needed.

Screen is shared and must be used in a back-to-back application.

Dimensions

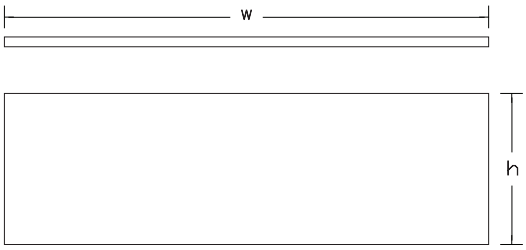

Specification Information

Step 1.

GN A

Step 2. Type

SD desk up A

Step 3. Configuration

X frameless A

Step 4. Material

G. glass A

Step 5. Height

42 42" high A
46 46" high A

Step 6. Width

36 36" wide A
42 42" wide A
48 48" wide A
60 60" wide A
72 72" wide A
84 84" wide A
96 96" wide A

Step 7. Surface Finish

TR clear glass - 1/4" thick A
5A opal etched - 1/4" thick A
NN no glass- for customer's own glass A
C3 clear glass - 3/8" thick A
G3 opal glass - 3/8" thick A
N3 no glass, for customer's own 3/8" thick glass A

Prices for Steps 1-7.

		TR	5A	NN	C3	G3	N3
GNSDXG. 42	**36**	$418	490	304	490	575	304
	42	$440	525	325	520	620	325
	48	$460	558	340	555	674	340
	60	$515	635	384	634	782	384
	72	$580	712	427	704	866	427
	84	$990	1181	731	1170	1395	731
	96	$1035	1256	765	1249	1517	765

46	**36**	$438	531	304	560	643	304
	42	$462	570	325	563	695	325
	48	$485	610	340	607	765	340
	60	$550	710	384	690	890	384
	72	$615	813	427	793	1048	427
	84	$1040	1283	731	1267	1564	731
	96	$1091	1373	765	1366	1721	765

Step 8. Trim Finish		
91	white A	+$0
G1	graphite A	+$0
MS	metallic silver A	+$7

Screen - Modesty GNSMNT

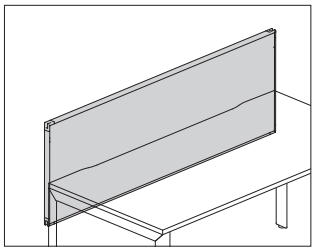

Product Information

Description

This fabric screen provides boundary above and below a surface in a single-sided application or return surface, at the back edge of a work surface. It is tackable and has a painted metal frame.

The screen can be placed most anywhere along the beam and does not need to match beam widths.

Notes

Screen attaches to rear beam with brackets. Order modesty attachment brackets (GNSB.) separately.

Screen will hang approximately 9¾" below the surface.

Order the following finishing hardware and connectors separately:

- Connector finishing kit (GNSE.)
- In-line connector kit (GNSH.)
- Post connector kit (GNSJ.)

Not recommended for a back-to-back application.

All fabric is railroaded.

Screen accepts Customer's Own Material (COM). Yardage is estimated for nondirectional 54"-wide fabrics.

Width—Yardage

36—1.23

42—1.41

48—1.61

60—1.99

72—2.37

For information on multiple quantities or directional fabrics, contact COM Department. See Order Information in Appendices.

Dimensions

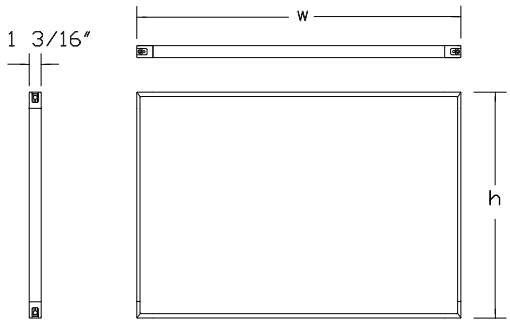

Specification Information

Step 1.

GN A

Step 2. Type

SM modesty A

Step 3. Configuration

N non hanging A

Step 4. Material

T. tackable fabric A

Step 5. Height

42 42" high A

46 46" high A

Step 6. Width

36 36" wide A

42 42" wide A

48 48" wide A

60 60" wide A

72 72" wide A

Prices for Steps 1-6.

		36	42	48	60	72
GNSMNT.	**42**	$465	500	535	614	689
	46	$485	523	556	625	709

Step 7. Trim Finish

91	white A	+$0
G1	graphite A	+$0
MS	metallic silver A	+$7

Step 8. Surface Finish

See application chart and textiles list for fabric usage and numbers. First 2 digits of number indicate fabric line; remaining digit(s) indicate fabric color.

Price Category 1	+$0
Price Category 2	+$6
Price Category 3	+$10
Price Category 4	+$21

Screen - Delineation GNSPNT

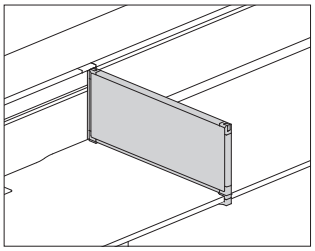

Product Information

Description

This fabric screen provides boundary between people seated side-by-side and attaches to the front edge of a squared-edge Layout Studio surface. It is tackable and has a painted metal frame.

Notes

Screen can be placed anywhere along front edge of a surface except on top of a desk end leg.

Screen width aligns with the depth of a work surface with flash gap.

Screen attaches to front edge of a work surface with a bracket. Order delineation screen attachment bracket (GNSC.) separately.

Order connector finishing kit (GNSE.) separately.

All fabric is railroaded.

Screen accepts Customer's Own Material (COM). Yardage is estimated for nondirectional 54"-wide fabrics.

Width—Yardage

24—0.84

30—1.00

36—1.19

For information on multiple quantities or directional fabrics, contact COM Department. See Order Information in Appendices.

Dimensions

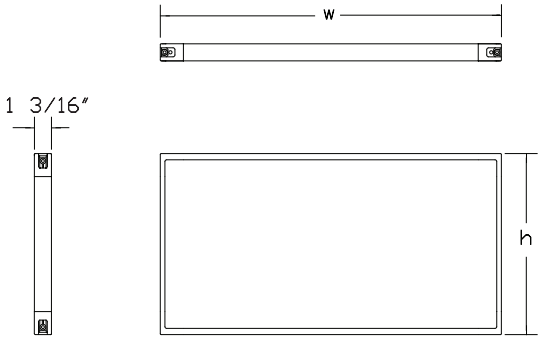

Specification Information

Step 1.

GN A

Step 2. Type

SP delineation A

Step 3. Configuration

N non hanging A

Step 4. Material

T. tackable fabric A

Step 5. Height

42 42" high A

46 46" high A

Step 6. Width

24 24" wide A

30 30" wide A

36 36" wide A

Prices for Steps 1-6.

		24	30	36
GNSPNT.	**42**	$255	298	340
	46	$266	313	353

Step 7. Trim Finish

91	white A	+$0
G1	graphite A	+$0
MS	metallic silver A	+$7

Step 8. Surface Finish

See application chart and textiles list for fabric usage and numbers. First 2 digits of number indicate fabric line; remaining digit(s) indicate fabric color.

Price Category 1	+$0
Price Category 2	+$6
Price Category 3	+$10
Price Category 4	+$21

Screen Brackets

GNSA.
GNSB.
GNSC.

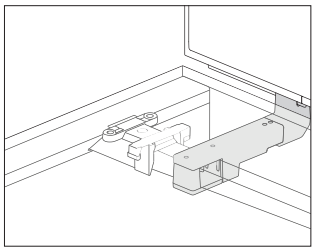

Product Information

Description

These brackets provide the attachment for the desk up, modesty, and delineation screens.

Notes

Specify 1 package for each screen.

Dimensions

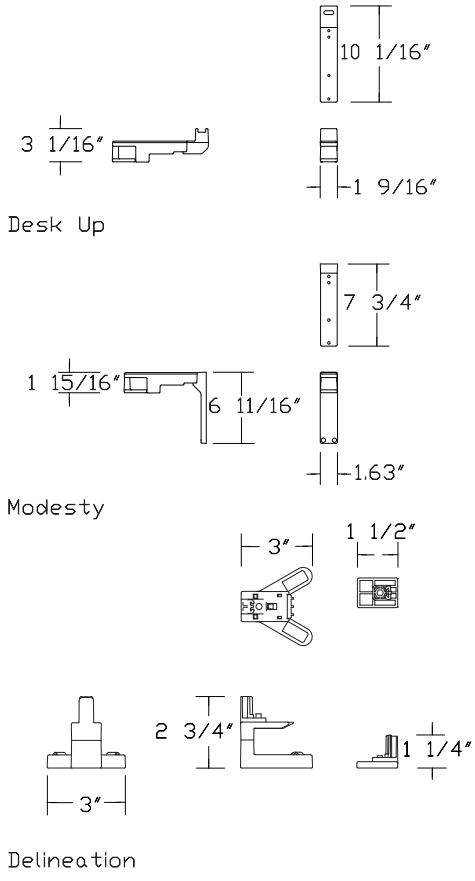

Specification Information

Step 1.

GNS A

Step 2. Type

A.	desk up A	
B.	modesty A	
C.	delineation A	

Prices for Steps 1-2.

GNSA.	$96
GNSB.	$158
GNSC.	$42

Step 3. Finish

91	white A	+$0
G1	graphite A	+$0
MS	metallic silver A	+$2

Screen Connectors

GNSE.
GNSH.
GNSJ.

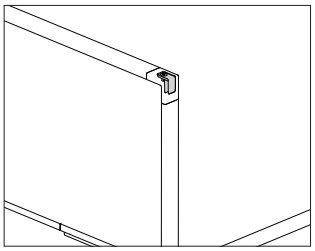

Product Information

Description

These connectors finish the exposed corners of a screen. Quantity of 2.

Notes

Specify the finishing kit (GNSE.) to finish the corner of a screen when not connecting to another screen or corner post.

Specify the in-line connector kit (GNSH.) where 2 screens meet.

Specify the post connector kit (GNSJ.) when connecting a screen to a corner post.

When using desk up screens, appropriate kits must be specified for the top of the screen only.

Modesty screens require kits for the top and bottom of the screen.

Dimensions

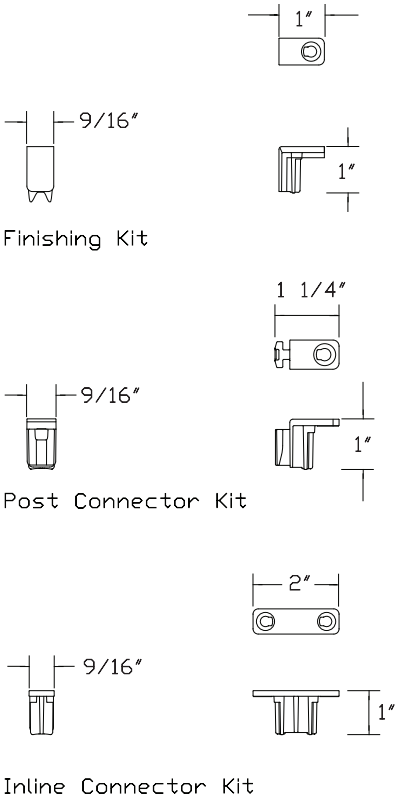

Specification Information

Step 1.

GN A

Step 2. Type

SE.	finishing kit A	
SH.	inline connector kit A	
SJ.	post connector kit A	

Prices for Steps 1-2.

GNSE.	$12
GNSH.	$13
GNSJ.	$12

Step 3. Trim Finish

91	white A	+$0
G1	graphite A	+$0
MS	metallic silver A	+$2

Corner Post

GNSND.
GNSNM.

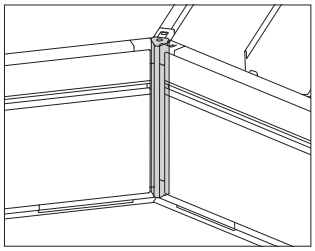

Product Information

Description

This corner post fills the open space created when screens come together at 120°.

Notes

Specify corner post to match height of attaching screens.

Dimensions

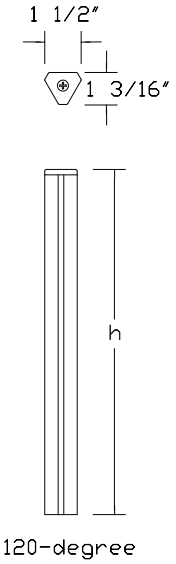

Specification Information

Step 1.

GN A

Step 2. Type

SN	120° A	

Step 3. Configuration

D.	desk up A	
M.	modesty A	

Step 4. Height

42	42″ high A	
46	46″ high A	

Prices for Steps 1-4.

GNSND.	**42**	$30
	46	$36
GNSNM.	**42**	$40
	46	$46

Step 5. Trim Finish

91	white A	+$0
G1	graphite A	+$0
MS	metallic silver A	+$2

Screen, Frameless Screen 120-Degree Filler

GNSX.

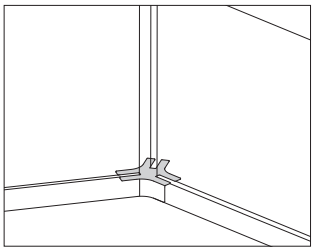

Product Information

Description

This trim piece fills the gap between 2 or 3 frameless screens in a 120° corner application.

Notes

Specify 2-way (2) where 1 screen is placed between 2 120° surfaces; specify 3-way (3) where screens are placed between 3 120° surfaces.

Dimensions

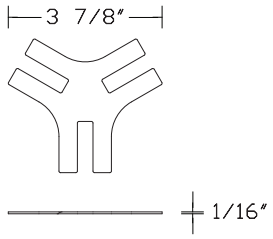

120-Degree 3-Way Filler

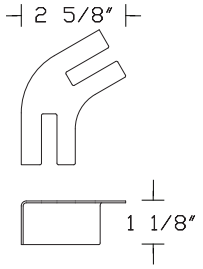

120-Degree 2-Way Filler

Specification Information

Step 1.

GN A

Step 2. Type

SX.	frameless screen filler for 120-degree applications A

Step 3. Material

G	glass A

Step 4. Application

2	2-way A
3	3-way A

Prices for Steps 1-4.

		2	3
GNSX.	**G**	$12	12

Step 5. Trim Finish

91	white A	+$0
G1	graphite A	+$0
MS	metallic silver A	+$2

Generic Beam Clamp GNSG.

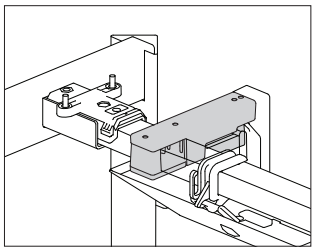

Product Information

Description

These beam clamps are used to attach a single-sided cable management tray.

Notes

If screens are being used, generic beam clamps are not required.

Specified as a single clamp. Order 2 for each cable management tray.

Dimensions

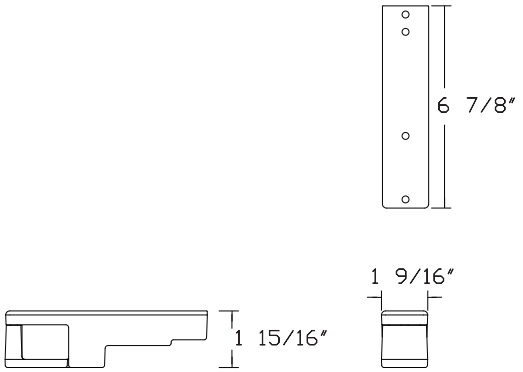

Specification Information

Step 1.

GNSG. A $32

Index by Product Name

Layout Studio®	
Access Pass Thru	page(s) 16
Beams, 120°	15
Beams, Meeting End	14
Beams, Rectangular Primary	12
Beams, Rectangular Return	13
Cable Management Clips - Double Tray	21
Connect™-Block Connector, 4-Circuit	29
Connect™-Duplex Receptacle, 4-Circuit	27
Connect™-Junction Block to Junction Block Jumper, 4-Circuit	25
Connect™-Junction Block, 4-Circuit	23
Connect™-Power Entry, 4-Circuit	28
Connect™-S300	30
Corner Post	57
Engage Leg, Asymmetrical Desk End, Double	8
Engage Leg, Back-to-Back Bracing Leg	11
Engage Leg, Corner Leg	10
Engage Leg, Desk End Double, Meeting End	9
Engage Leg, Desk End, Double	6
Engage Leg, Desk End, Single	5
Engage Leg, Intermediate Desk	7
Floor Power Entry Cover	18
Generic Beam Clamp	59
Hardware Pack, Fixed Surfaces	46
Hardware Pack, Quick Release Attachment	47
Hardware Pack, Sliding, Rectangular Primary Surface	48
Harness Cover	19
Junction Block Attachment Bracket	17
Meeting End, Rectangular	41
Primary Work Surface, 120°	43
Primary Work Surface, Rectangular	33
Project Table, Rectangular	39
Return Work Surface, Rectangular	37
Screen - Delineation	54
Screen - Desk Up - Fabric	49
Screen - Desk Up, Glass	51
Screen - Modesty	53
Screen Brackets	55
Screen Connectors	56
Screen, Frameless Screen 120-Degree Filler	58
Umbilical Riser, Fixed Height	22
Wire Management Tray	20
Work Surface-Attached Electrical Distributor	31
Work Surface-Attached Voice/Data Outlet	32

Index by Product Number

GN1420	Access Pass Thru	page(s) 16
GNBA.	Beams, Rectangular Return	13
GNBB.		
GNBC.		
GNBF.	Beams, 120°	15
GNBG.		
GNBM.	Beams, Meeting End	14
GNBR.	Beams, Rectangular Primary	12
GNHDA.	Hardware Pack, Quick Release Attachment	47
GNHDF.	Hardware Pack, Fixed Surfaces	46
GNHPA.	Hardware Pack, Quick Release Attachment	47
GNHPF.	Hardware Pack, Fixed Surfaces	46
GNHPS.	Hardware Pack, Sliding, Rectangular Primary Surface	48
GNHSF.	Hardware Pack, Fixed Surfaces	46
GNLFAL	Engage Leg, Asymmetrical Desk End, Double	8
GNLFAR		
GNLFBN	Engage Leg, Back-to-Back Bracing Leg	11
GNLFCN	Engage Leg, Corner Leg	10
GNLFEL	Engage Leg, Desk End, Single	5
GNLFEN	Engage Leg, Desk End, Double	6
GNLFER	Engage Leg, Desk End, Single	5
GNLFPN	Engage Leg, Desk End Double, Meeting End	9
GNLFSN	Engage Leg, Intermediate Desk	7
GNPA.	Junction Block Attachment Bracket	17
GNPC.	Floor Power Entry Cover	18
GNPH.	Harness Cover	19
GNSA.	Screen Brackets	55
GNSB.		
GNSC.		
GNSDFT	Screen - Desk Up - Fabric	49
GNSDNT		
GNSDTT		
GNSDXG	Screen - Desk Up, Glass	51
GNSE.	Screen Connectors	56
GNSG.	Generic Beam Clamp	59
GNSH.	Screen Connectors	56
GNSJ.		
GNSMNT	Screen - Modesty	53
GNSND.	Corner Post	57
GNSNM.		
GNSPNT	Screen - Delineation	54
GNSX.	Screen, Frameless Screen 120-Degree Filler	58
GNTAA.	Primary Work Surface, 120°	43
GNTAB.		
GNTAF.		
GNTAN.		
GNTDG.	Meeting End, Rectangular	41
GNTDN.		
GNTPA.	Project Table, Rectangular	39
GNTPN.		
GNTRA.	Primary Work Surface, Rectangular	33
GNTRB.		
GNTRF.		
GNTRN.		
GNTSN.	Return Work Surface, Rectangular	37
GNWC.	Cable Management Clips - Double Tray	21
GNWD.	Wire Management Tray	20
GNWF.	Umbilical Riser, Fixed Height	22
GNWS.	Wire Management Tray	20
Y1314.	Work Surface-Attached Electrical Distributor	31
Y1320.	Work Surface-Attached Voice/Data Outlet	32
Y1323.	Connect™-S300	30
Y1351.	Connect™-Power Entry, 4-Circuit	28
Y1353.	Connect™-Junction Block to Junction Block Jumper, 4-Circuit	25
Y1354.	Connect™-Block Connector, 4-Circuit	29
Y1355.	Connect™-Duplex Receptacle, 4-Circuit	27
Y1358.	Connect™-Junction Block, 4-Circuit	23

20-Day or Less/Assigned Lead-Time Order Information

20-Day or Less and Assigned Lead-Time Programs

20-day or less and assigned lead-time products are designed for established Herman Miller dealers with pre-approved credit.

Products are distributed from multiple manufacturing facilities across the United States. All products and options not designated by an Assigned Lead-Time icon A will ship in 20 business days or less after being acknowledged by Herman Miller. Products and options designated by an A are on the assigned lead-time program and will ship in 20 days, less than 20 days, or more than 20 days from order acknowledgement.

Ordering Procedure

Please place orders through Order Manager. If this is not available to you, place orders through mail or fax. Verbal purchase orders will not be accepted.

Order Entry fax number for Passage®, 5000 Series, and Meridian®
Filing and Storage: (616) 846 9236.
Order Entry fax number for all other products:
(616) 654 3085.

For more information, contact your Customer Care representative at: (866) 854 3048 EXT 3400.

Shipments and Delivery

Per Herman Miller Terms and Conditions.

Changes and Cancellation

Per Herman Miller Terms and Conditions.

Proprietary Textiles Application Chart — Workspaces

• *Available*

A *Assigned lead-time textile.*

See page 3 for exception notes.

	Action Office® Panels/Connectors	Action Office/Ethospace® B-Style Flipper Doors	Action Office B-Style Tackboards	Action Office/Ethospace E-Style Flipper Doors	Ethospace Tiles/Connectors	Ethospace Attaching Screens	Ethospace/Canvas Office Landscape® Privacy Doors	Canvas Tiles/Extended Width Tiles/Standing Screen	Canvas B-/E-Style Flipper Doors	Canvas Dock-Based Screens	Canvas Signature Screen	Canvas Tackboards	Layout Studio® Screen	Locale® Freestanding Screen	Locale Workbase Screen	Public Office Landscape® Screen/Desk Top Divider	Resolve® Boundary Screens/Flags	Resolve Display Screens	Resolve Rolling Screens/Canopies	Intersect® Screens	Thrive® Surface-Attached Screen	5000 Series Flipper Doors	5000 Series Tackboards	Seating
Price Category 1																								
COM Customer's Own Material A	1	1	1	1	1		1	1	1	1		•	1	1	1		1			1	1	3	3	1
8A_ _ Bubbletack™																		•						
2V_ _ Chain	•	•	•	•	•		•	22	•	•		•			•	•				•	•	3	3	
8T_ _ Crossing (85_ _)	2	2	2	•	•		•	•	2	•		•	•	•	•	•				•	•	3	3	18
95_ _ Gem	2	2	2	•	•		•	•	2			•								•		3	3	•
2I_ _ Grasscloth	•	•	•	•	•		•	•	•	•		•			•	•				•	•	3	3	
8B_ _ Multiscrim™						•											•		•					
5T_ _ Resonance	•	•	•	•	•		•	•	•			•	•							•		3	3	
8C_ _ Scrim Trim																			•					
2M_ _ Silkworm	•	•	•	•	•		•	•	•			•								•		3	3	
22F_ _ Slant	6		•		•		•	•				•	•							•		3	3	
2Z_ _ Slideshow		2		•	•		•	•	2	•		•			•	•					•	3	3	•
Price Category 2																								
1CD_ _ Code	•	•	•	•	•		•	•	•			•	•							•				
3P_ _ ColorGuard		2		•																				•
51_ _ Cord	•	•	•	•	•		•	•	•			•								•		3	3	
92_ _ Crepe	2	•	•	•	•		•	•	•			•								•		3	3	•
57_ _ Frost	•	•	•	•	•		•	•	•	•		•			•	•				•	•	3	3	
84_ _ Grosgrain	4	•	•	•	•		•	•	•	19		•			19	19				•	19	3	3	
4N_ _ Horizon	2	2	2	•	•		•	•	•			•								•		3	3	
1LM_ _ Loom	2	2	2	•	•		•	•	•	•		•	•		•	•				•	•			•
1HA_ _ Medley	2	2	2	•	•		•	•	•	•		•	•		•	•				•	•			•
3A_ _ Moiré		2	2	•	•		•	22	2	•		•			•	•					•	3	3	•
8V_ _ Railroad		2	2	•			•		2											•		3	3	•
43_ _ Tape								25	•			•												
8R_ _ Twist (5S_ _)	5	2	2	•	•		•	•	2	•		•	•	•	•	•				•	•	3	3	18
Price Category 3																								
70_ _ Bento	2	2	2	•				•	2	•		•			•	•				•	•	3	3	•
1FA _ Circuit		2	2	•	•		•	•	2	•		•								•		3	3	•
8S_ _ Coil	2	2	2	•	•		•	•	•	•					•	•				•	•	3	3	•
1FB _ Connection	•	•	•	•	•		•	•	•			•								•		3	3	
1FC _ Current	•	•	•	•	•		•	•	•			•								•		3	3	
8Z_ _ Glaze	•	•	•	•	•		•	•	•			•								•		3	3	
47_ _ Ground Cloth®	•	•	•	•	•		•	•	•	•		•	•	•	•	•				•	•	3	3	
5D_ _ Kira 2	2	2	2	•	•		•	•	2	•		•			•	•	14			•	•	3	3	
8L_ _ Savannah	•	20	•	•	•		•	•	•			•					14							
67_ _ Soba	4	•	•	•	•		•	•	•			•								•		3	3	
8U_ _ Stitches (5Z_ _)	2	2	2	•				•	2			•								•		3	3	18
8W_ _ Strands	•	•	•	•	•		•	•	•	•		•			•	•				•	•	3	3	
68_ _ Udon	4	•	•	•	•		•	•	•			•								•		3	3	

continued on next page

Proprietary Textiles Application Chart — Workspaces

continued

	Action Office® Panels/Connectors	Action Office/Ethospace® B-Style Flipper Doors	Action Office B-Style Tackboards	Action Office/Ethospace E-Style Flipper Doors	Ethospace Tiles/Connectors	Ethospace Attaching Screens	Ethospace/Canvas Office Landscape® Privacy Doors	Canvas Tiles/Extended Width Tiles/Standing Screen	Canvas B-/E-Style Flipper Doors	Canvas Dock-Based Screens	Canvas Signature Screen	Canvas Tackboards	Layout Studio® Screen	Locale® Freestanding Screen	Locale Workbase Screen	Public Office Landscape® Screen/Desk Top Divider	Resolve® Boundary Screens/Flags	Resolve Display Screens	Resolve Rolling Screens/Canopies	Intersect® Screens	Thrive® Surface-Attached Screen	5000 Series Flipper Doors	5000 Series Tackboards	Seating
Price Category 4																								
2W_ _ Gleam	•	•	•	•	•		•	•	•	•		•			•	•				•	•	3		
2X_ _ Glisten	•	•	•	•	•		•	•	•			•								•		3	3	
2Y_ _ Gloss	4				24			•				•								•		3	3	
22L_ _ Loft A		2	2	•	•		•	•	2	•		•	•	•	•	•				•	•	3	3	
6S_ _ Quilty	2	2	2	•	•		•	•	2											•		3	3	•
63_ _ Sironetta	•	•	•	•	•		•	•	•	•		•			•	•				•	•	3	3	
Price Category 5																								
14A_ _Hopsak	2	2	2	•	•			•	2			•								•				•
Price Category 6																								
No fabrics available at this time.																								

1 *Refer to price book appendices and Kiosk for COM information.*
2 *Available on all products except 54" and 60" wide.*
3 *Fabric is railroaded for all widths.*
4 *Not available on Action Office (AO®) acoustical panels.*
5 *(8R_ _), (8T_ _), (85_ _), and (5S_ _) not available on AO acoustical panels and not available on 54"- or 60"-wide products.*
6 *Not available on Action Office (AO®) connectors, cable management, and spacers.*
14 *Not available on Resolve flags.*
18 *Available on seating products in select colors. See the "Proprietary Textile Colors — Seating" appendix.*
19 *Not available in Grosgrain (84_ _) fabric colors 8401, 8405, 8407, and 8413.*
20 *Available only on Ethospace B-Style.*
22 *Not available as railroaded application option for* Chain *(2V00) and* Moiré *(3A00).*
24 *Not available on Ethospace cable access tile, cable channel tile, or beltline face tile.*
25 *Not available on Canvas Standing Screen.*

Application Note: Herman Miller cannot guarantee material/pattern alignment in adjacent products. For example, a fabric's pattern may not align from one screen to the next, or from one panel to the next.

Price Category 1

Customer's Own Material
See Order Information in Appendices. Assigned lead-time textile. A

Bubbletack™	
100% polyester	
8A01	Seashell White
8A02	Pearl Grey
8A05	Dune Beige
8A07	Pebble Beige
8A09	Olive Green
8A13	Slate Purple
8A19	Spa Blue
8A24	Sable Grey
8A27	Summer White
8A28	Moth Grey
8A29	Tea Leaf Grey
8A30	Blue Grey
8A31	Dusty Bronze
8A32	Slate Blue
8A33	Caramel Beige
8A34	Kiwi Green

Chain	
66" wide	
100% recycled polyester	
2V01	Pearl
2V02	Oyster
2V03	Wheat
2V04	Linen
2V05	Wicker
2V06	Bamboo
2V07	Sage
2V08	Spring Wood
2V09	Iceberg

Crossing	
54" wide	
86% antimony-free polyester	
14% polyester	
8T03	Wicker
8T04	Porcelain
8T05	Warm Grey
8T06	Sepia
8T07	Pumpkin
8T08	Copper
8T09	Cranberry
8T10	Tomato
8T11	Mulberry
8T12	Plum
8T13	Green Apple
8T14	Loden
8T15	Spruce
8T16	Periwinkle
8T17	Cerulean
8T18	Indigo
8T19	Shale
8T20	Brownstone
8T21	Bark
8T22	Tin
8T23	Graphite
8T24	Black

Crossing	
For systems products only.	
54" wide	
86% antimony-free polyester	
14% polyester	
8501	Ivory
8502	Oyster

Gem	
54" wide	
100% antimony-free polyester	
9501	Sesame
9502	Tangerine
9503	Red
9504	Red Violet
9505	Mulberry
9506	Java
9507	Twilight
9508	Bayou
9509	Iris
9510	Berry Blue
9511	Aqua Green
9512	Green Apple
9513	Spruce
9514	Black
9515	Slate Grey
9516	Fog

Grasscloth	
66" wide	
100% recycled polyester	
2I01	Silver Birch
2I02	Pampas
2I03	Sedge
2I04	Savannah
2I05	Reed
2I06	Moraine
2I07	Lea
2I08	Taro
2I09	Steam Grey
2I10	Cayenne
2I11	Bottle Green
2I12	Surf
2I13	Gravel

Multiscrim™	
60" wide	
100% polyester	
8B01	Seashell White
8B02	Pearl Grey
8B05	Dune Beige
8B07	Pebble Beige
8B09	Olive Green
8B15	Slate Purple
8B19	Spa Blue
8B24	Sable Grey
8B27	Summer White
8B28	Moth Grey
8B29	Tea Leaf Grey
8B30	Blue Grey
8B31	Dusty Bronze
8B32	Slate Blue
8B33	Caramel Beige
8B34	Kiwi Green

Price Category 1
continued

Resonance
66" wide
100% polyester

5T04	Greige
5T05	Porcelain
5T06	Alabaster
5T15	Iris
5T28	Sugar
5T47	Tobacco
5T54	Saltbush
5T57	Seed
5T58	Sepia
5T59	Tundra
5T60	Iceberg
5T61	Black
5T62	Chamois
5T63	Citrus
5T64	Tangerine
5T65	Red
5T66	Wild Berry
5T67	Boysenberry
5T68	Pistachio
5T69	Green Apple
5T70	Forest
5T71	Jade
5T72	Blue Green
5T73	Bright Turquoise
5T74	Twilight

Scrim Trim
61" wide
82% polyester
18% spandex

8C01	Seashell White
8C02	Pearl Grey
8C22	Winter Grey
8C24	Sable Grey

Silkworm
66" wide
58% recycled polyester
42% polyester

2M01	Cocoon
2M02	Pongee
2M03	Saffron
2M04	Tussah
2M05	Ceylon
2M06	Jasmine
2M07	Shale
2M08	Monsoon

Slant
66" wide
51% polyester
49% recycled polyester

22F01	Beech Nut
22F02	Chamois
22F03	Chartreuse
22F04	Pesto
22F05	Peacock
22F06	Neptune
22F07	Blueberry
22F08	Boysenberry
22F09	Magenta
22F10	Pumpkin
22F11	Cranberry
22F12	Silver Birch
22F13	Bluestone
22F14	Truffle
22F15	Shale

Slideshow
54" wide
56% recycled polyester
44% polyester

2Z01	Cinema
2Z02	Snapshot
2Z03	Shutter
2Z04	Scenic
2Z05	Portrait
2Z06	Still Life
2Z07	Blueprint
2Z08	Halftone
2Z09	Exposure
2Z10	Zoom

Price Category 2

Code
66" wide
100% Repreve recycled polyester

1CD01	Linen
1CD02	Khaki
1CD03	Iceberg
1CD04	Zinc
1CD05	Blue Black

ColorGuard
54" wide
100% vinyl

3P01	Grey	
3P02	Navy	
3P03	Spruce	A
3P04	Jade	A
3P05	Natural	A
3P08	Blueberry	A
3P09	Coal	A
3P12	Black Plum	A
3P14	Black	
3P15	New Burgundy	A
3P17	Burgundy	A
3P19	Slate	
3P31	Horizon Blue	A
3P33	Pumice	
3P54	Candy Apple	A
3P58	Beige	A
3P66	Deep Clay	A
3P72	Allspice	A
3P90	Green Tea	A
3P93	Camelback	A
3P96	Manzanita	A
3P97	Fudge	A
3PB2	Sea Grass	A
3PB5	Vizcaya Palm	A
3PB9	Neptune	A
3PC7	Bucksuede	A
3PD4	Otter	A

A Assigned lead-time color.

Price Category 2
continued

Cord
66" wide
51% antimony-free polyester
49% polyester

5101	Ivory
5102	White Ash
5103	Linen
5104	Bamboo
5105	Sepia
5106	Wicker
5107	Sesame
5108	Kiwi Green
5109	Bayou
5110	Shade
5111	Spring Wood
5112	Summer White

Crepe
54" wide
100% recycled polyester

9201	Licorice
9203	Smoke
9207	Cherry
9209	Claret
9212	Raisin
9218	Aquamarine
9223	Cadet
9241	Beachglass
9243	Midnight
9244	Artichoke
9248	Warm White
9249	Stone
9250	Earth
9251	Fog
9252	Slate Grey
9253	Yellow Dark
9254	Coral
9255	Blush Grey
9256	Wild Berry
9257	Clover
9258	Caribbean
9259	Cerulean
9260	Brownstone
9261	Shale
9262	Graphite
9263	Tomato
9264	Green Apple

Frost
66" wide
100% recycled polyester

5701	Bisque
5702	Abalone
5703	Porcelain
5704	Honey
5705	Iceberg
5706	Sage
5707	Reed
5708	Steam Grey
5709	Gunmetal
5710	Sable Grey

Grosgrain
66" wide
100% recycled polyester

*	8401	Pearl
	8402	White Ash
	8403	Warm Grey
	8404	Khaki
*	8405	Oyster
	8406	Celadon
*	8407	Chamois
	8408	Spa Blue
	8409	Bud
	8410	Kiwi Green
	8411	Bayou
	8412	Tin
*	8413	Iceberg

* Colors not available on Canvas Dock Mounted Screens, Locale® Workbase Screen, Public Office Landscape® Screen/Desk Top Divider, and Thrive® Surface-Attached Screen.

Horizon
54" wide
65% antimony-free polyester
35% polyester

4N01	Rye Grass
4N02	Sugar Pine
4N03	Silver Pine
4N04	White Ash
4N05	Spring Wood
4N06	Tamarack
4N07	Mushroom
4N08	Haystack
4N09	Oat Grass
4N10	Forest Moss
4N11	Hickory
4N12	Beech Nut
4N13	Pine Cone
4N14	Poplar
4N15	Elderberry

Loom
54" wide
100% polyester

1LM01	Linen
1LM02	Brown Sugar and Spice
1LM03	Brick and Mortar
1LM04	Salt and Pepper
1LM05	Black
1LM06	Lemongrass
1LM07	Poppy
1LM08	Wild Berry
1LM09	Loden
1LM10	Jade
1LM11	Deep Sea

Medley
54" wide
100% polyester

1HA01	Stone
1HA02	Trail
1HA03	Charcoal
1HA04	Cinder
1HA05	Citrus
1HA06	Papaya
1HA07	Chutney
1HA08	Tundra
1HA09	Feather Grey
1HA10	Chartreuse

Medley *continued*

1HA11	Loden
1HA12	Peacock
1HA13	Bayou
1HA14	Blue Grotto
1HA15	Blueberry

Moiré
54" wide
100% recycled polyester

3A01	Concrete
3A02	Biscotti
3A03	Rattan
3A04	Chambray
3A05	Fern
3A08	Violet
3A09	Zin
3A10	Curry
3A11	Spice
3A12	Cork

Railroad
54" wide
100% recycled polyester

8V01	Straw
8V02	Squash
8V03	Cayenne
8V04	Nutmeg
8V05	Root
8V06	Wicker
8V07	Moss
8V08	Aquamarine
8V09	Slate

Tape
66" wide
52% polypropylene
48% recycled polyester

4301	Pearl
4302	Oyster
4303	Wicker
4304	Reed
4305	Straw
4306	Celadon
4307	Alabaster
4308	Bamboo
4309	Feather Grey
4310	Iceberg

Price Category 2
continued

Twist
54" wide
80% antimony-free polyester
13% recycled polyester
7% polyester
8R04 Chamois
8R05 Wicker
8R06 Nutmeg
8R07 Squash
8R08 Copper
8R09 Cayenne
8R10 Poppy
8R11 Magenta
8R12 Garnet
8R13 Iceberg
8R14 Tin
8R15 Shale
8R16 Graphite
8R17 Birch
8R18 Sepia
8R19 Coffee Bean
8R20 Bayou
8R21 Periwinkle
8R22 Blueberry
8R23 Green Apple
8R24 Loden
8R25 Turquoise

Twist
For systems products only.
54" wide
80% antimony-free polyester
13% recycled polyester
7% polyester
5S01 Pearl
5S02 Ivory
5S03 Oyster

Price Category 3

Bento
54" wide
100% antimony-free polyester
7001 Frost
7002 Linen
7003 Khaki
7004 Truffle
7005 Grey Black
7006 Pumpkin
7007 Cranberry
7008 Everglade
7009 Cobalt

Circuit
54" wide
100% recycled polyester
1FA1 Sunflower
1FA2 Mango
1FA3 Red
1FA4 Magenta
1FA5 Cocoa
1FA6 Berry Blue
1FA7 Peacock
1FA8 Green Apple
1FA9 Graphite
1FAA Black

Coil
54" wide
100% recycled polyester
8S01 Nougat
8S02 Squash
8S03 Copper
8S04 Molasses
8S05 Chutney
8S06 Claret
8S07 Plum
8S08 Olive Wood
8S09 Root
8S10 Pesto
8S11 Hemlock
8S12 Java
8S13 Bayou
8S14 Peacock
8S15 Twilight
8S16 Ink
8S17 Black

Connection
66" wide
100% antimony-free polyester
1FB1 Oyster
1FB2 Linen
1FB3 Iceberg
1FB4 Silver Pine
1FB5 Apricot
1FB6 Cumin
1FB7 Green Apple
1FB8 Slate Blue
1FB9 Metal

Current
66" wide
100% antimony-free polyester
1FC1 Oyster
1FC2 Linen
1FC3 Iceberg
1FC4 Silver Pine
1FC5 Apricot
1FC6 Cumin
1FC7 Green Apple
1FC8 Slate Blue
1FC9 Metal

Glaze
66" wide
100% recycled polyester
8Z01 Wicker
8Z02 Honey
8Z03 Porcelain
8Z04 Celadon
8Z05 Spearmint
8Z06 Rye
8Z07 Frost
8Z08 Silver Birch

Ground Cloth®
66" wide
100% polyester
4701 Vapor Grey
4721 Warm White
4722 Fog
4723 Straw
4724 Red Orange
4725 Wild Berry
4726 Green Apple
4727 Caribbean
4728 Midnight
4729 Cappuccino

Kira 2
54" wide
100% recycled polyester
5D11 Flaxen
5D12 Papyrus
5D13 Oasis
5D14 Incense
5D15 Ash
5D16 Falcon

Savannah
66" wide
76% recycled polyester
24% polypropylene
8L01 Pearl
8L02 Oyster
8L03 Wheat
8L04 Jute
8L05 Bamboo
8L06 Metal
8L07 Linen
8L08 Celadon
8L09 Moss
8L10 Frost
8L11 Shale
8L12 Pewter

Price Category 3
continued

Soba
66" wide
100% antimony-free polyester
6701 Steam Grey
6702 White Ash
6703 Alabaster
6704 Khaki
6705 Oyster
6706 Ivory
6707 Pearl

Stitches
54" wide
54% polyester
46% recycled polyester
8U02 Rye
8U03 Khaki
8U04 Honey
8U05 Cattail
8U06 Pumpkin
8U07 Brick
8U08 Cool Grey
8U09 Slate Blue
8U10 Juniper
8U11 Evening Blue
8U12 Charcoal
8U13 Kiwi Green
8U14 Olive
8U15 Pesto
8U16 Cocoa
8U17 Seed

Stitches
For systems products only.
54" wide
54% polyester
46% recycled polyester
5Z01 White Ash

Strands
66" wide
100% recycled polyester
8W01 Pebble
8W02 Porcelain
8W03 Taupe
8W04 Honey
8W05 Khaki
8W06 Rye
8W07 Wicker
8W08 Tin
8W09 Cool Grey

Udon
66" wide
100% antimony-free polyester
6801 Steam Grey
6802 White Ash
6803 Alabaster
6804 Khaki
6805 Oyster
6806 Ivory
6807 Pearl

Price Category 4

Gleam
66" wide
100% recycled polyester
2W01 Pearl
2W02 Ivory
2W03 Oyster
2W04 Wheat
2W05 Wicker
2W06 Khaki
2W07 Sepia
2W08 Reed
2W09 Olive Green
2W10 Frost

Glisten
66" wide
84% polyester
16% recycled polyester
2X01 Porcelain
2X02 Rye
2X03 Wicker
2X04 Cashew
2X05 Iceberg
2X06 Bronze
2X07 Celadon
2X08 Shadow
2X09 Pewter
2X10 Ash
2X11 Truffle

Gloss
66" wide
67% polyester
24% polypropylene
9% recycled polyester
2Y01 Pearl
2Y03 Porcelain
2Y04 Oyster
2Y05 Rye
2Y06 Gunmetal

Loft
Assigned lead-time textile. A
54" wide
100% wool
22L01 Heathered Light Green
22L02 Heathered Dark Green
22L03 Heathered Turquoise
22L04 Heathered Navy
22L05 Heathered Orange
22L06 Heathered Red
22L07 Heathered Tan
22L08 Heathered Grey
22L09 Heathered Blue
22L10 Heathered Brown
22L11 Heathered Dark Grey
22L12 Heathered Denim

Price Category 4
continued

Quilty	
56" wide	
100% antimony-free polyester	
GreenShield	
6S01	Wicker
6S02	Honey
6S03	Khaki
6S04	Straw
6S05	Squash
6S06	Cayenne
6S07	Brick
6S08	Cerulean
6S09	Blue Violet
6S10	Mink
6S11	Green Apple
6S12	Jade
6S13	Indigo

Sironetta	
66" wide	
100% recycled polyester	
6301	Acapella
6302	Sonata
6303	Interlude
6304	Legato
6305	Forte
6306	Minuet
6307	Opus
6308	Harmony
6309	Ensemble
6310	Baroque
6311	Serenade

Price Category 5

Hopsak	
56" wide	
100% recycled polyester	
14A20	Black
14A22	Raw Umber Dark
14A26	Grey Blue Dark
14A30	Sepia Dark
14A38	Emerald Dark
14A39	Yellow Dark
14A40	Orange
14A41	Sienna
14A42	Olive Green Dark
14A43	Crimson
14A44	Crimson Dark Dark
14A45	Violet Dark
14A46	Pink Dark Dark
14A47	Ultramarine Dark
14A48	Cobalt Blue
14A49	Terra Cotta
14A50	Ochre Dark

Hue	
90% polypropylene	
10% polyester	
9701	Pearl
9702	Champagne
9703	Silver
9704	Graphite

For more information about our products and services or to see a list of dealers, please visit us at HermanMiller.com or call (800) 851 1196.

This book is recyclable. Printed in U.S.A. on recycled paper.

© 2015 Herman Miller, Inc., Zeeland, Michigan

® **HermanMiller**, ☻, 3D Intelligent, AO, Action Office, Aeron, ArcSpan, Ardea, Aside, Avall, Avive, Canvas Office Landscape, Caper, Celle, Co/Struc, Daisyone, Eames, Eco-Dematerialized, Embody, Envelop, Equa 2, Ergon 3, Ethospace, Fine-Tune, FlexFront, Flo, Formcoat, Formwork, Ground Cloth, Herman Miller for the Home, Herman Miller Healthcare, Intersect, Kinemat, Lapjack, Layout Studio, Lifework, Limerick, Live Unframed, Living Office, Locale, Maharam, Meridian, Mirra, Passage, Pellicle, Perspectives, PostureFit, Prospects, Public Office Landscape, Resolve, Rodney, Sayl, Setu, Thrive, Tu, Wishbone, Y-Tower, and Z-Axis are among the registered trademarks of Herman Miller, Inc., and its owned subsidiaries.

™ About Face, AireWeave, Albert, Backfit, Bubbletack, Burdick Group, Butterfly Back, Celeste, Cellular Suspension, Clam, Compass, Connect, DOT, Duracare, Durawrap, EnhancedAccess, Everywhere, Flex-Edge, Flute, Harmonic, Herman Miller International Collection, Herman Miller Select, Hopsak 2, Iota, Jaw, Keyless Entry, Latitude, Locale, Logic Power Access Solutions, Loop, Lyris, Lyris 2, Metaform Portfolio, Multiscrim, My Studio Environments, Nelson, Pixelated Support, Q, Recline Selector, Renew, Sense, SoftPad, Stackable, Stackable Storage, Swoop, Tone, TriFlex, Twist, and Wireframe are among the trademarks of Herman Miller, Inc., and its owned subsidiaries.

SM TAP, Textile Alliance Program, and Herman Miller Options are among the service marks of Herman Miller, Inc.

Alexander Girard® is a registered trademark of The Alexander Girard Estate.

Chemsurf® is a registered trademark of Wilsonart International.

Corian® is a registered trademark of E.I. du Pont de Nemours and Company Corporation.

Crypton® is a registered trademark of Crypton, Inc.

DACRON® is a registered trademark of INVISTA S.a r.l.

Edelman® Leather is a registered trademark of Edelman Leather, Inc.

FLEXNET™ is a trademark of Milliken & Company.

Floor Saver Glide® is a registered trademark of Carpin Manufacturing, Inc.

Geiger® is a registered trademark, and Bumper™ and Ward Bennett™ are trademarks, of Geiger International.

Goetz™ is a trademark of Mark W. Goetz.

Hang-It-All® is a registered trademark of Lucia Eames Demetrios, d.b.a. Eames Office.

Holophane® is a registered trademark of Holophane.

Ingeo™ is a trademark of Cargill Dow LLC.

iPad® is a registered trademark of Apple, Inc.

LifeSize® is a registered trademark of LifeSize Communications, Inc.

Magis®, Bombo®, and Me Too® are registered trademarks of Magis SpA.

Microsoft® and Natural® Keyboard are registered trademarks of Microsoft Corporation.

MOTOROLA XOOM™ is a trademark of Motorola Trademark Holdings, LLC.

Noguchi® and the Noguchi table configuration (trade dress) are registered trademarks, and Rudder Table™ is a trademark, of The Isamu Noguchi Foundation and Garden Museum.

Place Textiles® is a registered trademark of Place Textiles.

SuperSeat™ is a trademark of Dahti Seating, a division of ITW.