compatico

CMW Ao² G² Hush Frames

Price List
2015 / 2016

Office furniture systems

Total Performance Value

- Made in the USA
- GSA Approved
- Superior Quality & Budget-Friendly Prices
- BIFMA's Sustainability Certification for Furniture, level® certified
- Reputation for Customer First Service Practices and Support
- On-Time and Accurate RF Bar Code Shipments

COMPATICO PRICE LIST 2015/2016

TABLE OF CONTENTS

TERMS & CONDITIONS

Environmental Sustainability Commitment, Terms, Giza Layout, Pricing, Special Orders, Freight Policies, Warranty, Leadtimes, Cancellations/Returns, Liability, Limited Lifetime Warranty..... 2-6

SURFACE MATERIALS

Laminate Colors.....8
Value Laminate Colors for Vertical Surfaces.....10
Fabric Colors.....11
Customer Own Fabric.....13
Finish Colors.....14

AO2, AO POLYPANEL WORKSPACES

AO2 Panels.....16
AO2 Stacker Panels..... 29

CMW WORKSPACES

CMW Panels.....50
CMW PolyStax Fully Assembled.....60
CMW PolyStax Kits.....88
CMW Panel Hardware.....98

GENESIS/G2 WORKSPACES

Genesis/G2 Frames.....104
Genesis/G2 Panel Tiles.....106
Genesis/G2 Panel Hardware.....116
Genesis/G2B Benching.....122

FRAMES.....138

Frames Electrical.....157

FRESHFIT PANEL OVERLAYS.....162

HUSH ACOUSTICAL TILES.....164

ELECTRICAL

Choosing the Right System.....169
AO2, Genesis and CMW Electrical Assembly.....175
Phase 3 Electrical.....180
Electrical/Data Poles and Accessories.....183

STORAGE

Pedestals.....193
Lateral Files.....199
Bookcases, Storage Towers, Wardrobes.....201
Flipper Doors, Shelves.....207

WORKSURFACES.....213

Work Surface Hardware.....224

CONFERENCE AND TRAINING TABLES.....231

LEGS AND SUPPORTS.....235

HEIGHT ADJUSTABLE LEGS.....243

ACCESSORIES

Shelf Dividers, Pedestal Accessories, Keys and Plugs, Lighting, Tool Bars, Tool Bar Accessories, Keyboard Trays, Monitor Arms, LED Task Lighting, Cable Management, Tackboards, White Boards, Divider Screen Clips, Modesty Panels.....249

FREESTANDING DESKING.....269

FREESTANDING SEATING.....277

REFERENCES

Order Confirmation, Account Application, Uniform Sales & Use Tax Certificate, GSA Specification Registration Program, COM Fabric Measurements.....285

ABOUT COMPATICO

MISSION

Compatico manufactures and supplies new office furniture systems and parts, delivering reliable and cost effective products with a passion for customer service.

SERVICE

Compatico ships orders in most fabrics, finishes, and laminates within 15 business days. We provide a Limited Lifetime Warranty on our office systems.

COMMITMENT

Compatico does more than just sell quality office furniture systems and parts at economical prices. Its associates are committed to providing "Customer First Service." Customer service is a part of every Compatico department from accounting to operations, and from sales to transportation.

BENEFITS

- *Experienced and trusted supplier serving the industry for over 30 years*
- *Best "total value" in the industry*
  - *High quality*
  - *Low price*
  - *On-time and accurate performance*
  - *Product line selection breadth*
  - *"Customer First Service"*
- *Total project confidence*
  - *Product management support*
  - *Consistent product availability*
  - *Bar-coded shipments*
  - *20/20 Product Libraries*
- *ANSI-BIFMA Standards*
- *UL Listed*
- *GSA - Made in the USA content standards*
- *BIFMA level 1® certified*
- *TAAC™ (tackable and acoustic) standard on all panels*

Herman Miller®, Action Office®, and AO® are registered trademarks of Herman Miller, Inc., Zeeland, MI. Steelcase®, Movable Wall®/Avenir® are registered trademarks of Steelcase, Inc., Grand Rapids, MI Compatico, Inc. is not affiliated with Herman Miller, Inc.

Compatico Systems Terms & Conditions
Surface Materials
AO2
CMW
G2/Genesis & Benching
Frames
Hush
FreshFIT
Electrical
Storage
Worksurfaces
Conference & Training Tables
Legs
Height Adjustable Legs
Accessories
FS Desking & Seating
References

ENVIRONMENTAL SUSTAINABILITY COMMITMENT

Compatico is committed to promoting sustainable work environments and business practices which balance concerns for protection of our environment and resources, prudent business practices and social responsibility. We use as our framework the Sustainability Guidelines of the Business and Institutional Furniture Manufacturers Association International (BIFMA).

We continuously update our practices to progress toward these goals throughout all areas of our operation. We strive to ensure that our employees and investors are aware of this commitment to become an increasingly sustainable and environmentally responsible company. **Compatico is BIFMA level 1® certified.**

OUR ENVIRONMENTAL POSITION STATEMENT

We will:

- Inform our employees about our corporation's whole effort, and help them to understand their individual roles in making that effort successful.
- Reduce consumption of raw materials in our operations. Reuse rather than dispose, recycle whenever practical, and send all other waste to an energy disposal system.
- Make efficient use of resources that can be reused, reduced and/or recycled in our office and operational functions, and in our product content.
  - Use recycled/recycled-content supplies, components and products
  - In our products:
    - Plastic raceway covers are manufactured from 60% recycled products; they are fully recyclable
    - All steel components are 100% reusable/recyclable
    - All aluminum components are 100% reusable/recyclable
    - Water-soluble adhesives
    - Powder coat paint which eliminate VOC emissions
    - Many standard fabric offerings, created from post-consumer wastes
    - 100% green work surfaces are available
  - Re-use cartoning and packing material where possible in manufacturing; minimize use of packing material where possible in bulk packing.
  - Design our products to share as many items or components as possible and to cross-integrate, in many cases, with existing OEM products from which their designs are based.

BUY BACK/TAKE BACK PROGRAM

As part of Compatico's commitment to our strong environmental sustainability policy, we have created a Systems Buy-Back/Take-Back program. This program affords Compatico customers a disposal option for all existing Compatico product. We work with a network of authorized dealers across the country who will assist Compatico clients with the disposal of product in one of two options:

- End of useful life systems: Compatico authorized Buy-Back dealers will remove the system at little or no charge to customer based upon the customer location and access to the facility. Systems will be recycled by dealer assuring minimal environmental impact.
- Systems with useful life will be offered to the Compatico authorized Buy-Back dealers who will bid on the option of removing the Compatico systems. System will be resold as is or refurbished by the dealer assuring little environmental impact.

Compatico clients interested in participating in the Buy-Back/Take-Back program must contact Compatico no less than 90 days prior to date of systems removal and provide a comprehensive list of Compatico product on site, floor plan, site location (including access to location information), and date of intended or desired removal.

TERMS

Terms are Net 30 days, with approved credit. Contact Compatico Accounting Department (800.336.1772) to discuss terms, deposits, or other questions.

CREDIT

All orders are subject to credit approval. Five trade references (including your bank and account number) are required. Orders will not be released for production until credit is approved by the Compatico Financial Department. If your account has gone 30 days without payment, no merchandise will be shipped until past due balances are paid. In some cases, deposits or letters-of-credit will be required based upon order size. If credit arrangements are not established at the time the order is placed, the order will not enter the production cycle and will effect the ship date schedule.

DEDUCTIONS

No deductions will be allowed from invoices for any reason without authorization from Compatico.

PRICES AND DISCOUNTS

Discounts: Discounts apply to list prices in effect at the time of order and to all orders specified with standard Compatico finishes, sizes, and fabrics. Special finishes and sizes may necessitate an upcharge. Customer Service will advise prior to order acceptance. Although we do everything possible to keep our prices low and to maintain the list prices, sudden and unanticipated increases in the cost of materials may necessitate a change in list prices without notice.

Price Quotes: Compatico believes in "Customer First Service" and will readily assist you in quoting Compatico system products. Compatico Regional Sales Representatives are available for assistance as needed and will work with dealer associates to specify, quote, and order Compatico product. Compatico's in-house project management team will assist dealer associates in quoting, placing orders and verifying completeness. Contact the Compatico Project Management Department at 800.336.1772 for more information.

GIZA LAYOUT AND PRICING ASSISTANCE

Provided at no charge based upon dealer's drawings. Submit all layouts to the Compatico Project Manager for review. Response time will not exceed 72 hours and will depend upon the complexity of workstations. Compatico's symbol library is available on GIZA and CAP through 20/20 Technologies. Contact the Compatico Project Manager for details. Compatico does not offer "Space Planning." If raw space workstation planning, layout, or adjacency study is required, the dealer and/or specifier must provide the service.

We request that you provide the following information so that we can accurately furnish the proper product, colors, dimensions and provide you pricing in a timely manner:

1. System product you want quoted (Compatico AO2, AO PolyPanel, CMW, Genesis/G2, or F/S Freestanding Desking and Seating)
2. Drawings ("to scale" if possible). Clearly mark all heights and widths of panels; widths and depths of work surfaces and types of other components.
3. Powered panel locations and duplex locations. Indicate base or ceiling power and where they enter the panels.
4. Hard surface, fabric, tackable, or acoustic panels. Clearly mark all full, half and partial glaze panels and door panels. Indicate clear, frost, or smoke glazing and glazing strip color.
5. Accessories, such as pencil drawers, tackboards, keyboards, and tasklights must be clearly marked. Size must be indicated if required.
6. Fabrics, paint finishes, and laminates must be clearly indicated. Compatico will quote only standard fabric, finishes and laminates unless otherwise instructed. Fabric yardage assumes directional application (minimum 66" usable width).

Compatico Systems Terms & Conditions
Surface Materials
AO2
CMW
G2/Genesis & Benching
Frames
Hush
FreshFIT
Electrical
Storage
Worksurfaces
Conference & Training Tables
Legs
Height Adjustable Legs
Accessories
FS Desking & Seating
References

7. All overhead shelf units as high or low, regular depth or EDP depth. Indicate depth of closed storage units (regular or EDP).
8. Style and type of pedestals must be marked (Style A, B, etc…BF, FF, or BBF). Laterals must show width and height and file centers must show drawer configuration.

Bid Pricing: Compatico will provide bid pricing or special discounts when requested. Competitive circumstances may dictate special consideration.

Pricing and Discount Information: Contact your local Compatico Sales Representative, Regional Sales Director, or the Compatico Project Manager at 800-336-1772 for pricing assistance or questions. They will be happy to work with you in providing "Customer First Service."

*** For Advantage program and discounting, please see the program highlights or contact your Compatico Sales Rep.

SPECIAL ORDERS AND ORDER CHANGES

COM Fabrics: All COM fabrics must be submitted to Compatico for approval prior to order acceptance. Please send minimum 6 x 6 memo samples of COM fabric to the Customer Service Department; allow for added lead time.

Non-Standard Paint Finishes: Samples of non-standard paint finishes must be submitted to the Customer Service Department. Customer Service Department must receive the specified paint sample prior to order processing. Matching the desired paint sample may take several weeks and will then be sent back to the dealer for approval. Lead times may be extended and a price premium may be applicable.

Key Alike Option: All storage items (pedestals, laterals, wardrobe storage, etc.) can be keyed alike for the same project upon request at a cost of $30 list per lock. "Keyed Alike" lock sets are sent separately. Locks are field installed. Master or Control Keys are available separately. Original lock plugs and key **CANNOT** be returned. Please notify Customer Service Department at the time of order for key alike option. See Accessories Section.

Change Orders: Change orders will be accepted at no charge up to 2 working days after acknowledgement date. Change orders requested after 2 working days may be accepted and will be subject to additional charges and extended lead times. No change orders will be accepted once fabrication and upholstery have begun, and on any Quickship and parts orders.

Order Confirmation: Order confirmation will be faxed or emailed to all dealers after processing. Dealer is responsible to promptly review the confirmation (acknowledgement) for accuracy and completeness. Dealer will then fax or email confirmation back to the Customer Service Department with signed approval for processing. We request immediate notification of any necessary changes. In the absence of notification, order acknowledgement will be deemed to be accurate.

Order Cancellations: Compatico reserves the right to accept or deny all order cancellations, and will assess a restocking fee if applicable. Restocking fee will be a minimum of 25% of net order or actual material cost, whichever is greater.

Special Custom Product: Compatico will try to accommodate special or custom sizes per customer request. Special or custom size products will normally increase the lead time. Compatico must quote pricing for all special or custom products prior to order acceptance. Special or custom-size products cannot be cancelled once the order is processed.

SYSTEM AND PARTS CLASSIFICATION

Full system orders must include panels, worksurfaces and storage components unless otherwise approved by Compatico sales management.

COMPATICO FREIGHT POLICY AND PRACTICES

Full system orders (most 2 of 3 component groups) orders of over $15,000 list price, standard freight charges will be paid for by Compatico. This free freight policy includes shipments in the continental United States and the Province of Ontario, Canada. Call for freight quotes to any other Canadian destination. All Canadian GST portion of Brokerage bill will be dealer's expense and will be billed back to dealer by Compatico in US Dollars. Contact Compatico Sales Management for freight quotes to all other international destinations. Compatico will select carrier for all standard free freight shipments. Freight policy expectations, exceptions, and additional service charges are as follows:

1. Carrier will make effort to deliver merchandise with an "on-or-before" land date but Compatico cannot guarantee transit time. Carrier will normally deliver merchandise within a two-day window of standard shipping dates range.
   a. Call before delivery
      i. Full trailer load - no charge
      ii. LTL loads - only if noted on purchase order - $20
2. Should carrier arrive one day prior to the "on-or-before" land date, dealer/customer will accept all merchandise on that day. Should dealer/customer not be able to accept delivery they will be responsible for any storage and/or redelivery charges.
3. All deliveries will occur between the hours of 8am-5pm at carrier's convenience and delivery dates are not guaranteed. Compatico will provide shipping invoice with carrier name, phone number, and PRO# to enable customer to contact carrier directly to discuss delivery options.
   a. Customer/dealer requested after-hours delivery charge - $350.
   b. Customer/dealer requested guaranteed date delivery charge - $250
   c. Customer/dealer requested guaranteed (am, pm or specific time) delivery charge if available - Quote
4. Customer/dealer may change date of delivery if notice is given to Compatico at least two weeks in advance. Customer/dealer requested change of ship date within two weeks of scheduled ship date will be subject to a charge of $500 plus a 25% surcharge on the standard "on-or-before" land date freight rate.
5. Customer/dealer request to delay delivery of an order after the order has been in the production cycle for 5 or more days will be subject to storage charges as a result of the delay. In all cases, the order will be completed, billed and stored at dealer expense either in Compatico facilities or by designated freight line.
6. Customer/Dealer provided forklift is required for off-load unless otherwise arranged.
7. Merchandise will be delivered at dock level. If no dock is available, appropriate accommodations must be made by customer/dealer.
8. Merchandise must be unloaded within four hours of arrival. Detention of trailer beyond four hours will result in charge of $100/hr.
9. Additional special services for all full load and less-than-trailer load (LTL) shipments will be billed accordingly.
   a. Expedited shipping - quote
   b. Lift gate - $120
   c. Inside Delivery - Not Available
   d. Residential delivery - $75
   e. Change of address after delivery has shipped - $100
   f. Redelivery charge - $150
   g. Delay of shipment of more than 5 days 1% of net order per week
   h. Hand load truck option to increase container capacity will ship one day after acknowledged ship date - $150
   i. Crating available with assumption of one crate per $3000 net of order - $200 per crate.
   j. UPS crating $25 per box (All flipper doors must be crated)
   k. Split packaging service is available at $250 per order.

Compatico Systems Terms & Conditions
Surface Materials
AO2
CMW
G2/Genesis & Benching
Frames
Hush
FreshFIT
Electrical
Storage
Worksurfaces
Conference & Training Tables
Legs
Height Adjustable Legs
Accessories
FS Desking & Seating
References

10. Rail shipments - Compatico will work with customers to evaluate rail transportation options which might provide cost savings and green initiative benefits.

At Customer/dealer request, Compatico will review additional non-standard packaging or shipping requests for domestic or international shipping.

SYSTEM ORDERS OF LESS THAN $15,000 LIST AND ALL ACOUSTICAL TILE AND PARTS ORDERS:

For orders of less than $15,000 list and for parts orders not meeting "full system" qualifications, the price will be quoted FOB factory and will be paid by customer/dealer. All orders received via fax or phone will be shipped at standard UPS rates. All online orders will be shipped via UPS at a rate of 12.5% of net order - $10 minimum. If an order must ship via LTL (and cannot ship via UPS), then customer/dealer will have two shipping options:

1. Option 1 - Customer/dealer may elect to ship third-party direct with their preferred freight carrier on a direct bill or collect basis. Intent to contract with preferred carrier must be noted on purchase order.
2. Option 2 - Compatico will arrange LTL shipping at the following rates:
   a. Zone 1 - All states except those noted for Zone 2 and Province of Ontario - 16% of net price - minimum $95.
   b. Zone 2 - Arizona, California, Idaho, Montana, Nevada, Washington, Wyoming, and Utah - 22% of net price - minimum $150.
   c. Zone 3 - All Canada (except Ontario), Alaska, Hawaii, Caribbean and international orders are made to port of exit - freight charges must be quoted.

The Benefits of Compatico arranging freight:

1. We take care of all paperwork
2. We schedule pick ups
3. We track your shipment to final delivery
4. We research and use only reliable carriers with proven track records.
5. We carry the payable
6. We deal with any issues that arise during transit
7. We file the claim if ever needed

Online orders which must ship via LTL will be billed at 19% of net price. All orders of less than $20,000 list and parts orders will be shipped as close as possible to the approximate shipping date designated on the order acknowledgement. Under no circumstances shall Compatico be liable for delay in shipment or delivery of the order or for damages that result in such delay.

FREIGHT CLAIMS:

General guideline for freight time (LTL & UPS Ground) shown in chart. Title to the goods and risk of loss pass to the customer/buyer upon delivery to the carrier (FOB Grand Rapids, Michigan - Freight Prepaid). In order for Compatico to assist customer/dealer with freight claims for damaged or lost merchandise, it is imperative that customer/dealers adhere to freight claim policy. Requirements are as follows:

1. Customer/dealer shall inspect all merchandise immediately upon arrival.
2. If a carton is, or appears to be, damaged, do not unpack it. Note damage on the delivery receipt, take digital photos of the carton, and notify Compatico and carrier immediately.
3. Customer/dealer must preserve all damaged product and packaging as received pending inspection or waiver of inspection by carrier.
4. While lost or damaged freight claims are pending, all damaged merchandize must be made available to the carrier for salvage purposes.

Normal Transit Times (NOT GUARANTEED)					
Great Lakes	MI, OH, IL, IN, WI, MN, PA	1-3 Days	**Southeast**	NC, SC, AL, GA, VA	2-4 Days
Midwest	MO, IA, KY, KS, TN, WV, WY, CO, UT, AR, SD, ND	2-3 Days	**Deep-South**	FL	4-5 Days
Mid-South	TX, MS, LA, NE, OK	3-4 Days	**Northeast**	CT, ME, VT, DE, NH, NJ, NY, RI, MA, MD, ON-CAN	2-4 Days
Southwest	NV, NM, AZ, CA	4-5 Days	**Northwest**	OR, WA, ID, MT	5-6 Days
Additional Notes / FAQs					
Freight is quoted based on unloading at standard dock height during standard delivery hours with forklift. Additional charges will apply for hand or grade level unloading.					

KEY SHIPPING POINTS:

1. Compatico will review any other non-standard packaging or shipping requests.
2. Orders will be shipped as closely as possible to the approximate shipping date designated on the order acknowledgement. Under no circumstances shall Compatico be liable for delay in shipment or delivery of the order or for damages that result from such delay.
3. Transit Damage: All merchandise is packed in an approved manner. Inspect all merchandise immediately. If a carton is or appears to be damaged, do not unpack it. Customers/Dealers must make specific damage/shortage notes on the bill of lading at delivery before the driver leaves. Customers/Dealers assumes all product damage liability after Bill of Lading is signed.

CANCELLATIONS/RETURNS

No merchandise will be accepted by Compatico for exchange or credit without our expressed written consent before return shipment is made. All freight charges on returned merchandise must be prepaid and packaged properly. Compatico will not accept freight collect shipments. Restocking fees of 25% will apply. After 90 days, returns are not accepted. Note: See "Electrical Components" for return policy.

ELECTRICAL COMPONENTS

Due to Compatico UL Listing certifications, we cannot accept any returns of electrical components.

PRODUCT DESIGN

Compatico reserves the right to make changes in design and construction, and discontinue products without prior notice. All dimensions shown are considered to be approximate. Any panel runs of more than 72" must be reviewed with Compatico Project Managers to assure proper support. Please read the appropriate products installation manual, available online at www.compatico.com, for complete panel stabilization guidelines.

UL LISTING

Compatico AO2, AO PolyPanel, CMW, CVX and Genesis/G2 Systems and Electrical Accessories are UL Listed to the standard for office furnishings, UL 1286, third edition, listing number 8R55. This listing includes fabric-covered hard surfaces, fabric-covered acoustical and fabric-covered tackable/acoustical panels. All system panels meet ANSI-BIFMA structural standards. See www.compatico.com for all testing information (under product certifications) such as ASTM-E84, UL723, or NFPA255.

FORCE MAJEURE

Compatico shall not be liable for failure to perform due to strike or any other labor difficulty, terrorist acts, government reaction to terrorist acts,

Compatico Systems Terms & Conditions
Surface Materials
AO2
CMW
G2/Genesis & Benching
Frames
Hush
FreshFIT
Electrical
Storage
Worksurfaces
Conference & Training Tables
Legs
Height Adjustable Legs
Accessories
FS Desking & Seating
References

embargo, or any other act of any governmental authority, fire, flood, act of God, energy shortage, wrecks or delay in transportation, inability to obtain labor, materials, or manufacturing facilities from usual sources, failure of suppliers to meet contractual obligations, any act of the purchaser, or due to any cause beyond its reasonable control. In the event of delay due to any such cause, Compatico reserves the right to extend the date of delivery or completion by a period of time reasonably necessary to overcome effect of such delay, to allocate any available supply of goods in a manner it considers reasonable, or to cancel any purchase order.

LIABILITY

Compatico, its dealers and subcontractors, suppliers, or other of its contractors shall not be liable in tort (including strict liability and/or negligence), contract, or otherwise for direct, indirect, incidental, or consequential damages, including but not limited to damages or loss of other property or equipment, loss of revenue or profits, or loss of use of equipment (including added expenses of using existing facilities). The remedies set forth herein are exclusive, and the liability of Compatico with respect to any contract or anything done in connection therewith, such as the performance or breach thereof, or from the manufacturer, delivery, sale, resale, or use of any product covered by or furnished under the order, whether in contract, in tort (including strict liability and/or negligence) or otherwise shall not exceed the price of the product or part on which such liability is based.

CODES

Compatico Systems Furniture is considered to be portable furniture, subject to local fire and building codes. Installation and use of the furniture in accordance with all local, applicable codes is the responsibility of the customer.

LIMITED LIFETIME WARRANTY

Compatico warrants to the original purchaser that this product will be free from defects in materials and workmanship from the date of original delivery, subject to the terms and conditions of this Lifetime Systems Warranty ("Warranty"). This Warranty is not transferable. Compatico's obligation and the purchaser's sole remedy pursuant to this Warranty are limited to repair or replacement, at Compatico's option, FOB Compatico's headquarters, of replacement parts which prove, under normal use, to be defective. No person, firm, or corporation is authorized to assume for Compatico any other liability in connection with Compatico products. Customer will receive credit for returns of defective product only after the defective product is received by Compatico. This Warranty applies to all Compatico Systems, except as noted:

EXCEPTION: Height adjustable motors 2-years

- Fabric - Compatico fabrics have a 3-year warranty.
- Electrical - Compatico electrical products have a 10-year warranty.
- Moving parts - Moving parts, which include glides, suspensions, casters, and keyboard mechanisms, have a 5-year warranty.
- COM Material - The warranty does not apply to Customer's own material-i.e. material specified by buyer that is not a standard Compatico product offering, such as fabrics specified and purchased by buyer.
- Worksurfaces - laminated products with edges are guaranteed for five (5) years.
- Vertical laminate panels and tiles guaranteed for five (5) years.
- Consumables - products such as a lamp or light bulb for two (2) years.
- Products - misused or suffered abusive damage, not installed, used or maintained in accordance with products instructions and warnings.
- Normal wear and tear
- Use of non-Compatico components with our parts voids all warranty offered.
- Variations - occurring in surface materials (i.e. matching grains, textures and colors)
- Seating - Compatico warrants certain components of its chair(s) as follows: non-moving metal components, swivel and tilt mechanisms, pneumatic cylinders, casters, base, and all wood and plastic components for 5 years, and upholstery materials for 2 years. All chairs maximum capacity, 250 lbs. unless otherwise specified. Leather is not warranted against routine scratching and scuffing, as leather is subject to minor blemishing during use. Tufted buttons are not covered under this warranty. The purchaser is responsible for any initial minor assembly, cleaning and lubricating the chair and inspection to be certain that the hardware is securely fastened, and that there are no loose or missing parts, cracks, broken welds, or general instability. Chairs that are damaged or appear unsafe should be removed from service. For care of the coverings (leather, cloth, or vinyl), dust regularly as needed, wipe clean with a mild solution of warm soapy water, do not saturate, wipe dry. Do not use polish, wax, or saddle soap. If any chair component proves to be defective in materials or workmanship, Compatico will provide replacement parts or replace the chair at its option; if the model you purchased is no longer available, Compatico may replace it with a similar model as determined by Compatico. In no event will Compatico be liable for any incidental or consequential damages, or for any loss or injury to person or property resulting from the manufacture, sale and/or use of the chair.
- Casegoods - including desks, storage units and tables - Compatico warrant certain components of its casegoods furniture manufactured for quality and durability. Warranty applies as follows: Structural integrity of frame 5 years; laminate, wood, veneer finishes 2 years. Variations of grain and color are natural characteristics of wood, a living material. This variation is part of the beauty real wood and anticipated in real wood or wood veneer furnishings. Therefore, Compatico casegoods are not warranted to match in grain, color or color-fastness, or texture.
- Acoustical Tiles - One (1) year warranty on material (does not include field installation failures

WARRANTY LIMITATIONS

THERE ARE NO WARRANTIES EXCEPT AS EXPRESSLY SET FORTH HEREIN, EITHER EXPRESS OR IMPLIED, INCLUDING ANY WARRANTY OF MERCHANTABILITY OR FITNESS FOR ANY PARTICULAR PURPOSE. COMPATICO'S LIABILITY WITH RESPECT TO ITS PRODUCTS SHALL NOT EXCEED THE OBLIGATION TO REPAIR OR REPLACE DEFECTIVE PRODUCT EXPRESSLY SET FORTH ABOVE, IRRESPECTIVE OF THE THEORY UPON WHICH ANY CLAIM MIGHT BE BASED INCLUDING BREACH OF CONTRACT, WARRANTY, NEGLIGENCE, OR STRICT LIABILITY. UNDER NO CIRCUMSTANCES SHALL COMPATICO BE LIABLE FOR SPECIAL, INCIDENTAL, OR CONSEQUENTIAL DAMAGES. This Warranty does not apply to damages resulting from shipment, storage, accident, alteration, misuse, assembly or installation, including (but not limited to) unsupported work surfaces more than 48" in length that do not have a correctly placed worksurface support spanner. All claims under this Warranty must be authorized in writing by Compatico prior to repair or replacement of products.

- Compatico will not be responsible for air shipments of replacements. If a customer wishes for expedited/air shipments, the customer assumes the expense.

Compatico Systems Terms & Conditions
Surface Materials
AO2
CMW
G2/Genesis & Benching
Frames
Hush
FreshFIT
Electrical
Storage
Worksurfaces
Conference & Training Tables
Legs
Height Adjustable Legs
Accessories
FS Desking & Seating
References

ORDERING PROCEDURE

For Compatico to provide optimal "Customer First Service," use this checklist as a guide to placing orders and reviewing acknowledgements:

- **Billing and shipping addresses included**
- **Freight, handling, packing preferences**
- **Panels - part numbers, quantities, colors**
- **Connectors - part numbers, quantities, colors**
- **Electrical - part numbers, quantities**
- **Work surfaces and Supports - part numbers, quantities, colors**
- **Storage - part numbers, quantities, colors**
- **Accessories - part numbers, quantities, colors**

"Order Entry Specification Sheet" available upon request.

LEAD TIMES

The specialty of Compatico's "Customer First Service" is to meet short delivery times when necessary. Normal shipping lead time is 15 working days from date of order confirmation, unless otherwise agreed upon in writing. Compatico will quote any special or expected lead time upon request, and will use its best effort to obtain delivery within quoted lead times. However, Compatico will not be responsible for any damage caused by late delivery. Normal shipping lead times are for standard product; please refer to Compatico's current Price List Catalog for standard finishes, sizes and fabric selections.

GSA INFORMATION

Compatico holds a contract with the General Services Administration.
It is under:

71-1 Office Furniture
FSC 7110
Contract # GS-28F-0027S

To supply a GSA customer with office systems, contact our Customer Service Department or go to our web site for more details.

We participate in:

- Teaming Agreements
- Package Office Agreements

NOTE: Compatico reserves the right to declare "spec fees" split between dealers if one dealer is deemed by Compatico to have significantly contributed in the up-front project spec leading to a Compatico specific bid spec, in which another dealer wins the bidded project. Project registration forms available. See Appendix in the back of this Price Book for "GSA Specification Registration Program." Call us at 800.336.1772 for further GSA support.

CONTACT INFORMATION FOR ASSISTANCE OR QUESTIONS

Telephone . . . . . .800.336.1772 or 616.940.1772
Fax 616.940.1040
Web Site . . . . . .www.compatico.com (marketing and sales info)
Web Site . . . . . .www.compaticoparts.com (parts purchasing)

MARKETING MATERIAL

Brochures: Compatico will furnish its dealers with color brochures of each product line and sufficient quantities of Price List Catalogs for its sales and purchasing departments. We appreciate our dealer efforts and will support them whenever and wherever possible.

NOTE: For digital literature, please visit www.compatico.com.

Compatico Dealer Information Binders: Compatico will furnish the dealer with a Dealer Information Binder for its library. That binder will include:

- **Brochures on each product line**
- **Information about Compatico, Inc.**
- **Dealer programs**
- **Brief installation instructions**
- **Price List Catalog**
- **Paint finish samples**
- **Fabric cards**

NOTE: For digital literature, please visit www.compatico.com–at top of home page click on "Digital Binder."

SHOWROOM DISPLAY SAMPLES

The purpose of the Compatico Office System Display Program is to provide wider awareness of the quality of Compatico office furniture systems. It gives dealers an affordable way to put the system(s) in front of their customers so they can see and feel the product, and then make a comparison to higher-priced products. The process for obtaining a Compatico office furniture system for a display is simple and affordable:

1. Contact your Compatico Sales Representative or call the Compatico Home Office at 800-336-1772.
2. Choose any Compatico Office Furniture System(s) with any add-ons offered by Compatico in any desired configuration.
3. A dealer may obtain up to one workstation in each of the above-mentioned systems under the Compatico Office Systems Display Program.
4. The workstation(s) will cost 75% off list price; freight cost will be shared.
5. Each workstation may have a total net cost of up to $1,500.
6. Dealers may obtain workstations for displays costing over $1,500 net by paying their normal discount for any amount above $1,500.
7. Terms for purchase will be payment in 90 days with approved credit. Dealers who purchase $40,000 or more (net price) of Compatico systems within 180 days of the purchase of the display will have the full purchase price of the Compatico Office System Display credited to their account (up to $1,500). For dealers who have more than one system on display, each additional $40,000 purchase within the 180 day time period will provide an additional credit per system.

NOTE: For large showroom display plans, contact Compatico Sales Management to discuss special programs.

Compatico offers the fabrics, laminates and finishes you need to design a distinctive office space. The color options have been carefully selected to complement today's office interiors. You can create thousands of combinations that make design, ecological, ergonomic and financial sense for your business.

Surface Materials and Colors

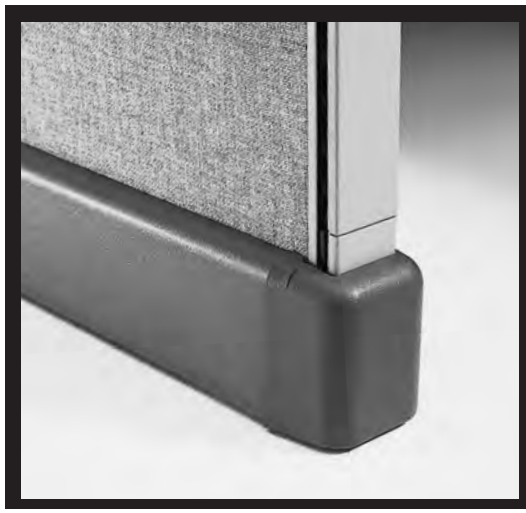

Compatico Systems Terms & Conditions
Surface Materials
AO2
CMW
G2/Genesis & Benching
Frames
Hush
FreshFIT
Electrical
Storage
Worksurfaces
Conference & Training Tables
Legs
Height Adjustable Legs
Accessories
FS Desking & Seating
References

STANDARD LAMINATE COLOR SELECTIONS FOR WORK SURFACES AND VERTICAL SURFACES

* We support all major suppliers: Wilsonart®, Formica®, Nevamar® and Pionte®. Depending upon selection, upcharges, discounts, minimum order quantity, or waste factor, may apply. More Grade 1 Standard Lamintes are available from Wilsonart®, Formica®, Nevamar® and Pionte® please contact Compatico Project Management at 800.336.1772 for availability. Additionally, we use Rehau and Charter edgebanding for quality and durability.

STANDARD LAMINATES - GRADE 1		MANUFACTURER/#
Dark Tone	DT	Formica 909.58 Black
Medium Tone	MT	Formica 837.58 Graphite
Inner Tone	HT	Wilsonart 10626.60 Sandrift
Light Tone	LT	Wilsonart 15008.60 Grey Moss
Light Neutral	LN	*Wilsonart 1503.60 Putty
Light Grey	LG	Wilsonart 10631.60 Light Grey
Inner Tone Light	HF	Wilsonart 15005.60 Heather Blush
Black Umber	BU	Formica 909.58 Black
Soft White	LU	Formica 932.58 Antique White
Solar Black	SB	Formica 837.58 Graphite
Graphite	GR	Formica 912.58 Storm
Grey Value 1	G1	Wilsonart D381.60 Fashion Grey
Tan Value 1	T1	*Wilsonart 1531.60 Light Beige
Warm Brown 1	W1	Wilsonart D50.60 Khaki Brown
Warm White	WW	Formica 932.58 Antique White
Black 0835	BL	Formica 909.58 Black
Black Genesis/G2	BK	Formica 909.58 Black
Folkstone Gray	FG	Formica 927.58 Folkstone
Stonedust	SD	Wilsonart D327.60 Pepperdust
Khaki	KH	*Wilsonart D439.60 Wallaby
Slate	SL	Wilsonart D91.60 Slate Grey

**Customer should review match suggestions as alternatives are available.*

3MM EDGE COLORS SOLID	
Dark Tone	DT
Medium Tone	MT
Inner Tone	HT
Light Tone	LT
Light Neutral	LN
Light Grey	LG
Inner Tone Light	HF
Black Umber	BU
Soft White	LU
Solar Black	SB
Graphite	GR
Grey Value 1	G1
Tan Value 1	T1
Warm Brown 1	W1
Warm White	WW
Black 0835	BL
Black Genesis/G2	BK
Folkstone Gray	FS/FG
Stonedust	SD
Khaki	KH
Slate	SL

NOTE: Other edge colors are available. Minimum order quantity upcharge and extended leadtimes may apply. Contact Compatico Customer Service at 800.336.1772 for assistance.

OTHER POPULAR GRADE 1 LAMINATE COLOR SELECTIONS

POPULAR LAMINATES - GRADE 1	MANUFACTURER/#
Neutral Weft	Formica 5875-58
Neutral Twill	Formica 8826-58
Mineral Spa	Formica 6920-58
Flax Gauze	Formica 7708-58
Antique White Oxide	Formica 303-58
Platinum Drops	Formica 8825-58
Elemental Concrete	Formica 8830-58
Prestige Walnut	Formica 6209-43
Select Cherry	Formica 7759-43
Citadel Warp	Formica 5882-58
Earthern Warp	Formica 5880-58
Earthern Twill	Formica 8828-58
Amber Maple	Formica 7012-58
Glamour Cherry	Formica 6208-43
Figured Annigre	Formica 7284-58
Natural Teak	Formica 8849-58
Sorrel Cherry	Formica 5886-43
Bleached Legno	Formica 8845-58
Jarrah Legno	Formica 8847-58
Acajou Mahogany	Formica 7008-43
Victorian Mahogany	Formica 7583-58

POPULAR LAMINATES - GRADE 1	MANUFACTURER/#
Linen	Wilsonart D427-60
Grey Mesh	Wilsonart 4877-38
Basket Weaving 101	Wilsonart 4965-38
Gesso Tracery	Wilsonart 4962-38
Shadow Zephyr	Wilsonart 4857-60
Natural Almond	Wilsonart D30-60
Neutral Glace	Wilsonart 4143-60
Desert Zephyr	Wilsonart 4841-60
Canyon Zephyr	Wilsonart 4642-60
Evening Tigris	Wilsonart 4674-60
Dove Grey	Wilsonart D92-60
Grey Nebula	Wilsonart 4622-60
Pearl Soapstone	Wilsonart 4886-38
Misted Zephyr	Wilsonart 4843-60
Urban Iron	Wilsonart 4968-38
River Cherry	Wilsonart 7937-38
Mangalore Mango	Wilsonart 7984-38
Persian Cherry	Wilsonart 7989-38
Palisades Oak	Wilsonart 7987-38
Florence Walnut	Wilsonart 7993-38
Morelia Mango	Wilsonart 7985-38

Compatico Systems Terms & Conditions
Surface Materials
AO2
CMW
G2/Genesis & Benching
Frames
Hush
FreshFIT
Electrical
Storage
Worksurfaces
Conference & Training Tables
Legs
Height Adjustable Legs
Accessories
FS Desking & Seating
References

ADVANTAGE PROGRAM LAMINATES–WORK SURFACES

ADVANTAGE + PROGRAM LAMINATES ("VALUE")

	MANUFACTURER/#
Almond	Formica 920.58
Beige	Wilsonart 1530.60
Cherry Birch	Formica 7484.58
Fashion Grey	Wilsonart D381.60
Folkstone Graphix	Formica 507.58
Frosty White	Wilsonart 1573.60
Grey Nebula	Wilsonart 4622.60
Khaki Brown	Wilsonart D50.60
Light Grey	Wilsonart 10631.60
MDF Solidz	Formica 7812.58
Natural Pear	Wilsonart 7061.60
Pumice	Formica 858.58
Wallaby	Wilsonart D439.60
White	Formica 949.58
Natural Recon	Wilsonart 7996.38
Pinnacle Walnut	Wilsonart 7992.38
Neowalnut	Wilsonart 7991.38

ADVANTAGE X PROGRAM LAMINATES

	MANUFACTURER/#
Wild Cherry CC-01	Wilsonart 7054.60 Wild Cherry
Maple CC-02	Wilsonart 10776.60 Kensington Maple
White Speckled CC-13	Wilsonart 4621.60 White Nebula
Pumice Wallaby CC-08	Wilsonart D439.60 Wallaby
Fashion Grey CC-04	Wilsonart D381.60 Fashion Grey

ADVANTAGE VE PROGRAM LAMINATES AND EDGES*

Wild Cherry	Wilsonart 7054-60
Kensington Maple	Wilsonart 10776-60

**Edge Details: Black 2mm all edges*

OTHER POPULAR EDGE PROFILE COLOR SELECTIONS

WORKSURFACE EDGE PROFILES

.01 T-mold edge
.02 3MM edge
.03 3MM edge with scallops
.04 self edge (same as laminate)
.05 bull-nose edge (available in black only)
.06 ripple-edge (available in black only)
.07 wedge-edge (available in black only)
.08 waterfall-edge (available in almond, jet-black, platinum, smoke, graphite, medium tone, inner tone light, putty)
.23 3MM edge with scallops (available in exclusive laminates)
.24 3mm edge without scallops (available in exclusive laminates only)
.30 Non-stocked ["VE" Laminates (Wild Cherry/Kensington Maple on reverse sides) - Black 2mm Edge]
.35 Stock ["VE" Laminates (Wild Cherry/Kensington Maple on reverse sides) - Black 2mm Edge]

SPECIALS *

.91 Knife Edge
.98 thermofused - soft slope edge*
.99 thermofused - radius edge*
.77 "special" edge options

**Call for program options. Minimum order quantity (MOQ 10) and 30% upcharges apply.*

STOCKED EDGES

	MANUFACTURER/#
Black	C600001
Innertone	C600026
Innertone Light	C600146
Light Grey	C600027
Light Tone	C600028
Designer White	C100079
Graphite	C600005
Folkstone	C600254
Wallaby	C200181
Medium Tone	C400446
Wild Cherry	CP40071
Kensington Maple	CP20046
Natural Teak	CP50896
Glamour Cherry	CP40899
Select Cherry	CP40007
Bleached Legno	CP40897

**Other edge color options are available. Minimum order quantity and upcharges may apply.*

THERMOFUSED WORK SURFACE MATERIAL IN-STOCK

509997 Frost White (off white)
518889 Haute Grey (light grey)
509018 Fibers Cashmere (tan speckle)
508642 Studio White Dust (gray speckle)
508628 American Natural (maple)
508648 Auburn Pear (light cherry)
508626 Hayward Cherry (dark cherry)
508732 Clove (mahogany)

**Additional colors available. See Omnova - Surf (X) 3D Laminates. www.omnova.com/designcenter/*

NOTE: Additional lead time and upcharge may apply. Minimum order quantity (MOQ 25). Approximately add 30% to list price.

Compatico Systems Terms & Conditions
Surface Materials
AO2
CMW
G2/Genesis & Benching
Frames
Hush
FreshFIT
Electrical
Storage
Worksurfaces
Conference & Training Tables
Legs
Height Adjustable Legs
Accessories
FS Desking & Seating
References

VALUE LAMINATE COLOR SELECTIONS FOR VERTICAL SURFACES

All HPL laminates may be applied to vertical surfaces. Compatico presents the following for value conscience consumers.

System Panel Blanks	COMPATICO/#	MANUFACTURER/#
Black (1)	BV.909.58	Formica 909.58 Black
Almond (1)	BV.920.58	Formica 920.58 Almond
Folkstone Gray (1)	BV.927.58	Formica 927.58 Folkstone
Maple (2)	SV-8340-T	Nevamar WM8340T Maple
Cherrywood (2)	SV-7054-60	Wilsonart 7054.60 Wild Cherry

(1) ***Reduce item/component list price by 10% (5% if 1/2 panel or G2 tile)***
(2) ***Reduce item/component list price by 20% (10% if 1/2 panel or G2 tile)***

QUICK SHIP PROGRAM

Compatico will work with customers to meet special/expedited leadtimes of seven (7), or twelve (12) business days when requested. It is recommended to use Compatico Advantage and Value Programs for best laminate and fabric availability. No upcharge.

G2/GENESIS TILES — **MANUFACTURER/#**

Black..... Formica 909.58 Black
Almond..... Formica 920.58 Almond
Folkstone Gray..... Formica 927.58 Folkstone
*Maple..... Nevamar WM8340T Maple
*Cherrywood..... Wilsonart 7054.60 Wild Cherry

Doors — **MANUFACTURER/#**

Black..... Formica 909.58 Black
Almond..... Formica 920.58 Almond
Folkstone Gray..... Formica 927.58 Folkstone

FABRIC COLOR SELECTIONS

ADVANTAGE + PROGRAM FABRICS

	PATTERN #
Guilford Broadcast(D)	2758(1196-2686)
Guilford Framework (D)	2762(2519-2690)
Guilford Sprite	2671 (010-032)
Guilford Strata	2968 (030-070)
Burch Century	7176-7183
Burch Chainlink	7420-7425
Burch Columbus (D)	7919-7925
Burch Dayton (D) "Ascot"	7112-7118
Burch Foundation (ND) "Crepe"	7954-7961
Burch Midway	7237-7246
Burch Traction	7753-7759

ADVANTAGE X PROGRAM FABRICS

Challenge	PATTERN #
Hearts	495-3099
Chess	495-8723
Cribbage	495-5002
Checkers	495-8014

Forecast	PATTERN #
Sunset	494-1415
Shine	494-3104
Rain	494-8551
Clouds	494-5004

Nature	PATTERN #
Fields	14-248
Streams	14-252
Meadows	19-31
Valleys	19-71A

ADVANTAGE VE PROGRAM FABRICS

Shoreline Collection	PATTERN #
Dove Grey	15-100 D
Sand Dune	15-09 D
Winter Birch Taupe	15-17 D
Seafoam	15-103 D
Cascade Blue	15-06 D

QUICK SHIP PROGRAM

Compatico will work with customers to meet special/expedited leadtimes of seven (7), or twelve (12) business days when requested. It is recommended to use Compatico Advantage and Value Programs for best laminate and fabric availability. No upcharge.

GRADE 1 FABRIC	PATTERN #
Guilford Anchorage (D)	2335
Guilford Axiom(D)	3947
Guilford Bailey (D)	2299
Guilford Belgrade (D)	4052
Guilford Candid (D)	3007
Guilford Coastline (D)	3495
Guilford Crosstown (D)	2526
Guilford Digit (D)	2978
Guilford Drift (D)	2539
Guilford FR701 Standard (ND)	2100
Guilford Hatchet (D)	2977
Guilford Hopscotch (D)	2823
Guilford Lido (D)	2858
Guilford Mingle (D)	2527
Guilford Parameter (D)	3945
Guilford Regatta (ND)	2400
Guilford Spinel (D)	3582
Guilford Streetwise (D)	2721
Guilford Theory (D)	3006
Guilford Variety (D)	3944
Guilford Vertical Surface Blends (ND)	2145
Guilford Vertical Surface Solid (ND)	2402-2403
Guilford Zirconia (D)	3583
Burch Comet (D)	7915-7918
Burch Matchsticks (D)	9633-9641
Burch Milkyway (D)	7903-7906
Guilford Regatta (ND)	2400
Burch Shine (D)	9642-9650
Burch Starburst (D)	7907-7914
Burch Stratford (ND)	7000-7029
Burch Terra (ND)	9489-9547
CF Stinson Hampshire (D)	hs
CF Stinson Imprint (D)	imprint
CF Stinson Prime (D)	prm
CF Stinson Spree (D)	spree
Mayer Basic	162 (000-027)
Mayer Fresco	163 (000-017)
Mayer Strata	164 (000-020)

GRADE 2 FABRIC	PATTERN #
Guilford Auster (D)	2537
Guilford Birdseye (D)	2748
Guilford Block Party (D)	2538
Guilford Cape Cod (D)	3073
Guilford Celestrial (D)	9441
Guilford Cosmos (D)	2655
Guilford Cresent (D)	5583
Guilford Galaxy (D)	9226
GuilfordGroove(D)	3497
Guilford Here & Now* (D)	4138
Guilford Lily Pad (D)	2318
Guilford Meander (D)	2660

Compatico Systems Terms & Conditions
Surface Materials
AO2
CMW
G2/Genesis & Benching
Frames
Hush
FreshFIT
Electrical
Storage
Worksurfaces
Conference & Training Tables
Legs
Height Adjustable Legs
Accessories
FS Desking & Seating
References

Compatico Systems Terms & Conditions
Surface Materials
AO2
CMW
G2/Genesis & Benching
Frames
Hush
FreshFIT
Electrical
Storage
Worksurfaces
Conference & Training Tables
Legs
Height Adjustable Legs
Accessories
FS Desking & Seating
References

GRADE 2 FABRIC CONTINUED	PATTERN
Guilford Metallation (D)	5118
Guilford Metro (D)	3077
Guilford Network (D)	4158
Guilford Nitro(D)	2317
Guilford Nova (D)	2049
Guilford Otto (D)	2670
Guilford Phone Tag (D)	2314
Guilford Rattan (D)	3087
Guilford Reeds (D)	3078
Guilford Sand (D)	2658
Guilford Sensa (D)	9218
Guilford Snapshot (D)	3499
Guilford Tempest (D)	2120
Guilford Tweed (D)	2737
Guilford Woodland (D)	3083,3084
Burch Crescent (D)	7449-7463
Burch Dream (D)	9624-9632
Burch Glade(D)	7404-7407
Burch Metallation (D)	7476-7490
Burch Oasis (D)	7281-7295
Burch Regatta (ND)	7587-99, 7856-61
Burch Sensa (D)	7138-7154, 7187-7194
Burch Splash (D)	7306-7312
Burch Timber (D)	7408-7411
Burch Toy Poodle (D)	9665-9671
Burch Trail (D)	7412-7419
CF Stinson Axis Too (D)	axt
CF Stinson Genesis/G2 (ND)	gs
CF Stinson Mira (D)	mir
CF Stinson Reflectance (ND)	r

GRADE 3 FABRIC	PATTERN #
Guilford Studio 54 (D)	2966
Burch Arrowhead (D)	1003984-990
Burch Dune (D)	7330-49, 7570-75
Burch Galaxy (D)	7165-76, 7464-75
Burch Neutra (D)	1001970-78
Burch Realm (D)	7296-7303
Burch Reflection (D)	6804-6814
Burch Vertical blends (ND)	7875-7878
Burch Vertical solids (ND)	7879-7889
CF Stinson Acclaim (D)	ac
CF Stinson Asterisk (D)	as
CF Stinson Budget Blends (ND)	bb
CF Stinson Del Mar (ND)	dm
CF Stinson Encore (D)	enc
CF Stinson Luther (D)	lut
CF Stinson Repetition (D)	rpt
CF Stinson Ringer (D)	rn
CF Stinson Sight Line (D)	sl
CF Stinson Stick It To The Man (D)	stm
CF Stinson Traffic (D)	tf

GRADE 4 FABRIC	PATTERN #
Burch Basketweave (ND)	7760-7767
Burch Avalon (D)	7255-7270
Burch Renaissance (D)	7200-7215
Burch Willow (D)	7271-7278
CF Stinson Brush Style* (D)	b
CF Stinson Galaxy (D)	12000
CF Stinson Isis (D)	is
CF Stinson Linea (D)	lin
CF Stinson Lumiere (D)	lum
CF Stinson Lupina (D)	lup
CF Stinson Prisma (D)	pz
CF Stinson Shoji (D)	sj
CF Stinson Spiro (D)	s
CF Stinson Spiro reverse (D)	sr
CF Stinson Tally (D)	t
CF Stinson Vertical blends (ND)	v3800
CF Stinson Vertical solids (ND)	v4900

GRADE 4 HYTEX CRYPTON WALL FABRIC	PATTERN #
Hytex Allusion	26-01 to 26-08
Hytex Constellation	103-01 to 103-12
Hytex Ensemble	28-01 to 28-08
Hytext Horizon	27-01 to 27-08
Hytex Stitch	105-01 to 105-08
Hytex Waimea	104-01 to 104-08

60"W panels or tiles using Grade 4 Hytex Fabrics are not available. Width is 54".

Anti-microbial and other fabric treatments are available upon request for all Guilford of Maine fabrics. Call Compatico for details. Upcharge and leadtime extension may apply.

BENCHING STORAGE SEAT CUSHIONS & MOBILE PEDESTAL SEAT CUSHIONS

GRADE 1 FABRIC	PATTERN #
Guilford Open House	2334-2014 to 2334-2093

See www.compatico.com "Digital Library" for fabric card.

NOTE: Additional seating fabrics are available from Guilford of Maine.

CUSTOMER OWN FABRIC

CUSTOMER OWN FABRIC

COMPATICO carries all Guilford, Burch and Stinson panel fabrics in grades 1,2, 3 and 4. Most of Compatico's panel fabrics are certified to pass the ASTM E-84 test (a vertical application test for panel fabrics) and TB117 (also called CA117). COMPATICO must approve all COM Fabrics for use on all acoustical panels and Genesis/G2 tile segments. A sample (12" x12") of COM Fabric is required for approval before order acceptance. COM yardage is based upon directional fabric, 66" width roll. All extra COM yardage will be returned with product order shipment.

FOR SAMPLES AND SWATCHES OF PANEL FABRICS CONTACT:

1. **Guilford of Maine**
   Grand Rapids, MI
   (800) 544-0200
   www.guilfordofmaine.com
   www.terratex.com

2. **Burch Fabrics**
   Grand Rapids, MI
   (800) 841-8111
   www.burchfabrics.com

3. **CF Stinson**
   Rochester Hills, MI 48309
   (800) 841-6279
   www.cfstinson.com

4. **Compatico Exclusive Fabrics**
   Contact Compatico Customer Service
   (800) 336-1772
   www.compatico.com

5. **Mayer Fabrics**
   Indianapolis, IN
   (317) 267-2626
   www.mayerfabrics.com

NOTE:
(D) Denotes directional fabric.
(ND) Denotes non-directional fabric.
*Denotes 54" wide fabric, which cannot be used on 60" products that require fabric.

When ordering, please include pattern color number and name.

Compatico Systems Terms & Conditions
Surface Materials
AO2
CMW
G2/Genesis & Benching
Frames
Hush
FreshFIT
Electrical
Storage
Worksurfaces
Conference & Training Tables
Legs
Height Adjustable Legs
Accessories
FS Desking & Seating
References

Compatico Systems Terms & Conditions
Surface Materials
AO2
CMW
G2/Genesis & Benching
Frames
Hush
FreshFIT
Electrical
Storage
Worksurfaces
Conference & Training Tables
Legs
Height Adjustable Legs
Accessories
FS Desking & Seating
References

FINISH SELECTIONS

- Non-standard colors and cross-over system colors are available if a project exceeds $50,000 list, additional lead time and upcharges may apply

Standard Paint Colors		
AO	**CMW**	**G2/Genesis**
Available on: • Top Caps • Panel Trim • Connectors • Files/Storage	**Available on:** • Top Caps • Panel Trim • Base Covers • Files/Storage	**Available on:** • Top/End Caps - Textured Plastic • Top/End Caps - Aluminum • Connectors • Base Covers • Files/Storage

		AO	CMW	G2/Genesis	Frames
FINISH NAME	**FINISH CODE**				
Black Umber	BU	● (QS)	●		●
Dark Tone	DT	●			
Inner Tone	HT	●			
Inner Tone Light	HF	● (QS)	●		●
Light Neutral	LN	●			
Light Grey	LG	●			
Light Tone	LT	●			
Medium Tone	MT	● (QS)	●		●
Soft White	LU	●		■	■
Grey Value 1	G1		●		
Solar Black	SB		●		
Tan Value 1	T1		●		
Warm Brown	W1		●		
Warm White	WW		●	■	■
Wood Rose	WR		●		
Black - 0835	BL		●		
Black - G2	BK			●	
White Wonder	WD			■	●
Folkstone Grey	FS/FG			●	
Khaki	KH			●	
Slate	SL			●	
Stonedust	SD			●	
Hardrock Maple similar to Wilsonart® 10776	HM			● (TC)	
Oiled Cherry similar to Wilsonart® 7054-60	OC			● (TC)	
Metallic Medium Grey	MMG/717	■	■	■	■
Metallic Platinum	MP/705	■	■	■	■
Metallic Silver	MS/666	■	■	■	●

(QS) Best finish option for Quickship requests - advantage panels (fabric) only.
(TC) Wood grain vinyl wraps available on top/end caps only.

■ *Optional - finish available upcharge may apply if order is less than $50,000 list.*

AO2 - LIMITED PAINT APPLICATIONS:

1. AO2 Base Covers..... (LU, DT, MT, HF, BU)
2. AO HMA Metal Flipper Doors..... (MT, HF, BU)
3. Glazing Strips..... (HF, LT, MT, DT, BU)
4. ONJ Pedestals..... (MT, HF, BU)

CMW - LIMITED PAINT APPLICATIONS:

1. Glazing Strips.....(G1, SB, T1, WR, WW)
2. Post Fillers STP 230/231/232.....(WR, G1, T1, W1, BK, LG, MT, DT, LT, HT)
3. Metal end caps must be used for optional colors.
4. CG Overhead Panels and Shelves (BU, HT, HF)

G2/GENESIS - LIMITED PAINT APPLICATIONS:

1. Top/End Cap Inserts & Receptacle covers (standard colors only)
2. Glass tiles have thin black trim (standard)
3. Aluminum Top/End Caps must be used for optional colors
4. CG Overhead Panels and Shelves (BU)

NOTE: Wedge Blocks and Hanger Frames
(DT only, even on Optional Finishes unless specifically requested – upcharge may apply)

NOTE: Sliding Doors (HSD, SSD, GSD) are available in LG, MT, DT, LT, HT, WR, G1, T1, W1, BU/BK.

NOTE: Support legs/bases: certain support legs/bases may have limited finish options.

FRAMES

1. Other specialty colors available
2. Screen clip finishes limited

NOTE: Additional Herman Miller® or Steelcase® colors are available.

SPECIAL FRAME FINISHES: Tangerine (TG), Clipped Grass (CG), Bimini Blue (BB), Empire Red (ER), Capri Teal (CT), Gulfstream Blue (GB), Willow Green (WG), Cambrian Coral (CC), Canary Yellow (CY), Magnolia Ivory (MV).

Compatico offers AO2 and AO2 PolyPanel office furniture systems. Each is designed to stand alone, be mechanically interchangeable with, or work in tandem with Herman Miller® Action Office® Series 2 products.

The Compatico AO2 Panel System is a one-of-a-kind monolithic panel system that offers maximum design flexibility without overwhelming you with options. With Compatico PolyPanel you get the look of a stackable tile system at a lower price. Up to four different tiers (fabric, laminate, marker board and/or acrylic in clear, glazed, or frosted options) can be stacked on each other to create multiple designs on each panel. This allows you to create cost-effective and customized design for your workspace.

Compatico also offers AO1 Systems - contact Compatico Project Management for details and quote support.

AO

Compatico Systems Terms & Conditions
Surface Materials
AO2
CMW
G2/Genesis & Benching
Frames
Hush
FreshFIT
Electrical
Storage
Worksurfaces
Conference & Training Tables
Legs
Height Adjustable Legs
Accessories
FS Desking & Seating
References

Laminated Surface Panels
with TAAC™ construction non-powered base

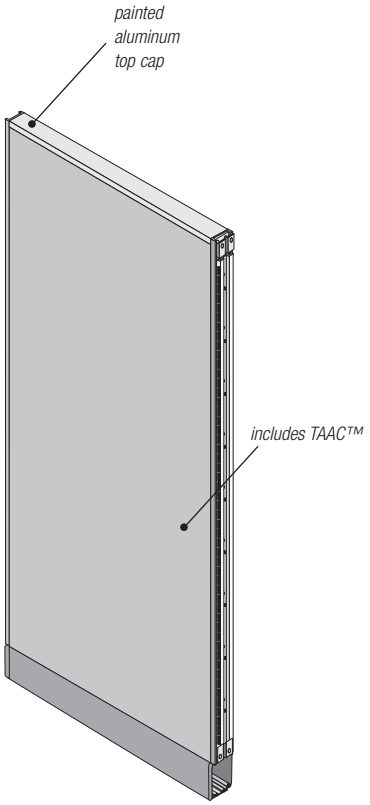

Note:
- *Take 10% (5% one side) off list price if using Value "BV" laminates*
- *Take 20% (10% one side) off list price if using Value "SV" laminates*

DIMENSIONS		PRODUCT NUMBER	LIST PRICE	PRODUCT NUMBER	LIST PRICE
Height	Width				
		*LAMINATED ONE SIDE**		*LAMINATED TWO SIDES**	
39H	12W	THLB139.12	$506.00	HLB239.12	$448.00
	18W	THLB139.18	602.00	HLB239.18	555.00
	24W	THLB139.24	608.00	HLB239.24	560.00
	30W	THLB139.30	691.00	HLB239.30	668.00
	36W	THLB139.36	709.00	HLB239.36	674.00
	42W	THLB139.42	757.00	HLB239.42	734.00
	48W	THLB139.48	811.00	HLB239.48	793.00
	60W	THLB139.60	907.00	HLB239.60	894.00
47H	12W	THLB147.12	$534.00	HLB247.12	$465.00
	18W	THLB147.18	660.00	HLB247.18	603.00
	24W	THLB147.24	660.00	HLB247.24	599.00
	30W	THLB147.30	719.00	HLB247.30	674.00
	36W	THLB147.36	779.00	HLB247.36	734.00
	42W	THLB147.42	839.00	HLB247.42	805.00
	48W	THLB147.48	886.00	HLB247.48	864.00
	60W	THLB147.60	1,005.00	HLB247.60	984.00
53H	12W	THLB153.12	$571.00	HLB253.12	$495.00
	18W	THLB153.18	690.00	HLB253.18	633.00
	24W	THLB153.24	697.00	HLB253.24	638.00
	30W	THLB153.30	762.00	HLB253.30	709.00
	36W	THLB153.36	786.00	HLB253.36	734.00
	42W	THLB153.42	887.00	HLB253.42	853.00
	48W	THLB153.48	947.00	HLB253.48	918.00
	60W	THLB153.60	1,077.00	HLB253.60	1,056.00
67H	12W	THLB167.12	$642.00	HLB267.12	$543.00
	18W	THLB167.18	780.00	HLB267.18	704.00
	24W	THLB167.24	786.00	HLB267.24	716.00
	30W	THLB167.30	862.00	HLB267.30	799.00
	36W	THLB167.36	941.00	HLB267.36	888.00
	42W	THLB167.42	1,012.00	HLB267.42	972.00
	48W	THLB167.48	1,085.00	HLB267.48	1,057.00
85H	12W	THLB185.12	$775.00	HLB285.12	$657.00
	18W	THLB185.18	984.00	HLB285.18	901.00
	24W	THLB185.24	991.00	HLB285.24	907.00
	30W	THLB185.30	1,097.00	HLB285.30	1,032.00
	36W	THLB185.36	1,211.00	HLB285.36	1,163.00
	42W	THLB185.42	1,372.00	HLB285.42	1,353.00
	48W	THLB185.48	1,378.00	HLB285.48	1,360.00

DESCRIPTION: Laminated TAAC™ surface panel includes painted aluminum top cap, non-powered wire management raceway and adjustable glides. TAAC™ is a new construction offering tackable and acoustical properties. Order end cap to finish exposed panel end. Connectors not included. **SPECIFY:** Product Number, Trim Finish, and Fabric. **NOTE:** Panel to panel connectors available in DT (Dark Tone) only and must be ordered separately. **NOTE:** List Pricing is based on Standard Grade 1 Laminates from Wilsonart®, Nevamar®, Pionite®, and Formica®. Value Vertical HPL Laminates are available for a reduced price, see Vertical Surface Laminates for available selections. Contact Compatico Project Management for pricing.

Laminated Surface Panels
with TAAC™ construction
powered base
Byrne 4 circuit/8 wire electrical

DIMENSIONS		PRODUCT NUMBER	LIST PRICE	PRODUCT NUMBER	LIST PRICE
Height	Width				
		*LAMINATED ONE SIDE**		*LAMINATED TWO SIDES**	
39H	24W	THLC139.24	$751.00	HLC239.24	$704.00
	30W	THLC139.30	863.00	HLC239.30	842.00
	36W	THLC139.36	893.00	HLC239.36	858.00
	42W	THLC139.42	953.00	HLC239.42	931.00
	48W	THLC139.48	1,019.00	HLC239.48	1,002.00
	60W	THLC139.60	1,127.00	HLC239.60	1,115.00
47H	24W	THLC147.24	$802.00	HLC247.24	$746.00
	30W	THLC147.30	891.00	HLC247.30	847.00
	36W	THLC147.36	963.00	HLC247.36	900.00
	42W	THLC147.42	1,035.00	HLC247.42	916.00
	48W	THLC147.48	1,095.00	HLC247.48	984.00
	60W	THLC147.60	1,226.00	HLC247.60	1,115.00
53H	24W	THLC153.24	$833.00	HLC253.24	$782.00
	30W	THLC153.30	935.00	HLC253.30	883.00
	36W	THLC153.36	971.00	HLC253.36	918.00
	42W	THLC153.42	1,085.00	HLC253.42	1,051.00
	48W	THLC153.48	1,156.00	HLC253.48	1,127.00
	60W	THLC153.60	1,300.00	HLC253.60	1,276.00
67H	24W	THLC167.24	$929.00	HLC267.24	$858.00
	30W	THLC167.30	1,036.00	HLC267.30	972.00
	36W	THLC167.36	1,126.00	HLC267.36	1,073.00
	42W	THLC167.42	1,209.00	HLC267.42	1,169.00
	48W	THLC167.48	1,292.00	HLC267.48	1,258.00
85H	24W	THLC185.24	$1,133.00	HLC285.24	$1,051.00
	30W	THLC185.30	1,271.00	HLC285.30	1,205.00
	36W	THLC185.36	1,395.00	HLC285.36	1,348.00
	42W	THLC185.42	1,569.00	HLC285.42	1,551.00
	48W	THLC185.48	1,587.00	HLC285.48	1,569.00

DESCRIPTION: Laminated TAAC™ surface panel includes painted aluminum top cap, powered wire management raceway and adjustable glides. TAAC™ is a new construction offering tackable and acoustical properties. Order end cap to finish exposed panel end. Connectors not included. Powered panels include appropriate size electrical distribution assembly (4-circuit/8-wire) and 2 electrical outlet covers. Refer to electrical pages for duplex receptacles and other system 4 (4-circuit/8-wire) electrical products.
SPECIFY: Product Number, Trim Finish, and Fabric. **NOTE:** Panel to panel connectors available in DT (Dark Tone) only and must be ordered separately. **NOTE:** List Pricing is based on Standard Grade 1 Laminates from Wilsonart®, Nevamar®, Pionite®, and Formica®. Value Vertical HPL Laminates are available for a reduced price, see Vertical Surface Laminates for available selections. Contact Compatico Project Management for pricing.

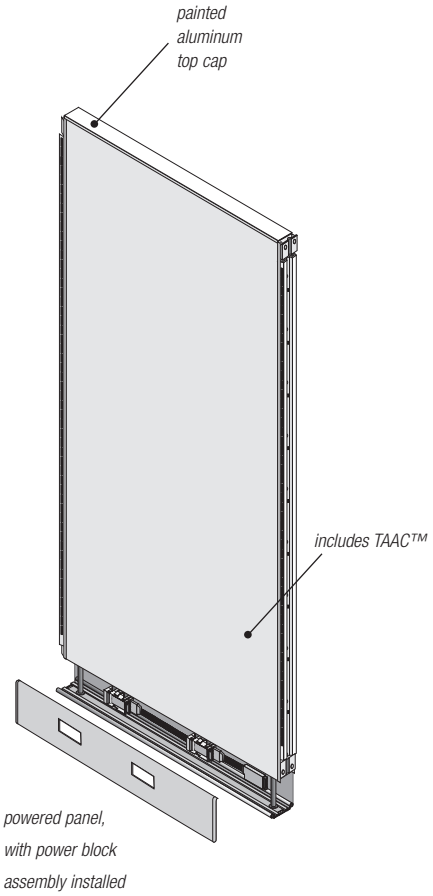

Note:
- *Take 10% (5% one side) off list price if using Value "BV" laminates*
- *Take 20% (10% one side) off list price if using Value "SV" laminates*

Compatico Systems Terms & Conditions
Surface Materials
AO2
CMW
G2/Genesis & Benching
Frames
Hush
FreshFIT
Electrical
Storage
Worksurfaces
Conference & Training Tables
Legs
Height Adjustable Legs
Accessories
FS Desking & Seating
References

Compatico Systems Terms & Conditions
Surface Materials
AO2
CMW
G2/Genesis & Benching
Frames
Hush
FreshFIT
Electrical
Storage
Worksurfaces
Conference & Training Tables
Legs
Height Adjustable Legs
Accessories
FS Desking & Seating
References

Laminate Surface Panels
with TAAC™ construction
powered base
Byrne 3 circuit/5 wire electrical

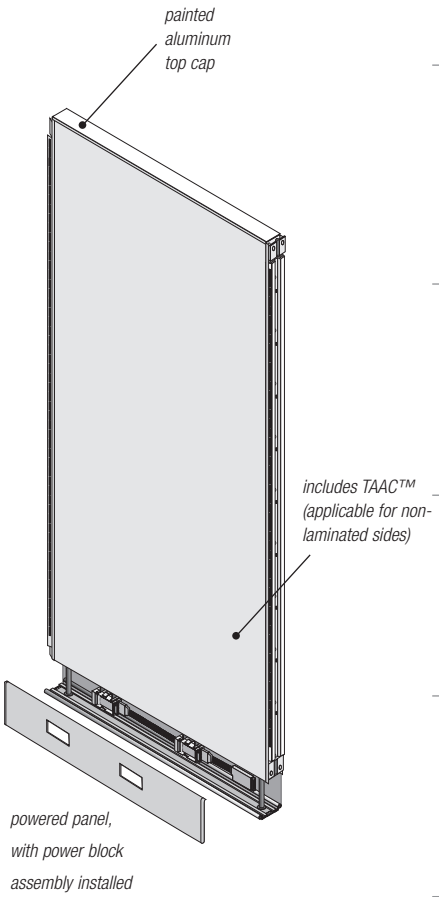

Note:
- *Take 10% (5% one side) off list price if using Value "BV" laminates*
- *Take 20% (10% one side) off list price if using Value "SV" laminates*

Note: Order panel-to-panel electrical jumper separately.

DIMENSIONS		PRODUCT NUMBER	LIST PRICE	PRODUCT NUMBER	LIST PRICE
Height	Width				
		*LAMINATED ONE SIDE**		*LAMINATED TWO SIDES**	
39H	24W	THLD139.24	$659.00	HLD239.24	$608.00
	30W	THLD139.30	759.00	HLD239.30	734.00
	36W	THLD139.36	789.00	HLD239.36	751.00
	42W	THLD139.42	843.00	HLD239.42	817.00
	48W	THLD139.48	906.00	HLD239.48	885.00
47H	24W	THLD147.24	$709.00	HLD247.24	$649.00
	30W	THLD147.30	787.00	HLD247.30	739.00
	36W	THLD147.36	859.00	HLD247.36	792.00
	42W	THLD147.42	925.00	HLD247.42	802.00
	48W	THLD147.48	982.00	HLD247.48	866.00
53H	24W	THLD153.24	$741.00	HLD253.24	$686.00
	30W	THLD153.30	831.00	HLD253.30	775.00
	36W	THLD153.36	867.00	HLD253.36	811.00
	42W	THLD153.42	974.00	HLD253.42	936.00
	48W	THLD153.48	1,042.00	HLD253.48	1,009.00
67H	24W	THLD167.24	$837.00	HLD267.24	$762.00
	30W	THLD167.30	932.00	HLD267.30	864.00
	36W	THLD167.36	1,022.00	HLD267.36	966.00
	42W	THLD167.42	1,099.00	HLD267.42	1,057.00
	48W	THLD167.48	1,179.00	HLD267.48	1,142.00
85H	24W	THLD185.24	$1,040.00	HLD285.24	$954.00
	30W	THLD185.30	1,167.00	HLD285.30	1,097.00
	36W	THLD185.36	1,291.00	HLD285.36	1241.00
	42W	THLD185.42	1,459.00	HLD285.42	1,436.00
	48W	THLD185.48	1,474.00	HLD285.48	1,452.00

DESCRIPTION: Laminated TAAC™ surface panel includes painted aluminum top cap, powered wire management raceway and adjustable glides. TAAC™ is a new construction (applicable for non-laminated sides) offering tackable and acoustical properties. Order end cap to finish exposed panel end. Connectors not included. Powered panels include appropriate size electrical distribution assembly (3-circuit/5-wire) and 2 electrical outlet covers. Refer to electrical pages for duplex receptacles and other system 4 (3-circuit/5-wire) electrical products. **SPECIFY:** Product Number, Trim Finish, and Fabric. **NOTE:** Panel to panel connectors available in DT (Dark Tone) only and must be ordered separately. **NOTE:** List Pricing is based on Standard Grade 1 Laminates from Wilsonart®, Nevamar®, Pionite®, and Formica®. Value Vertical HPL Laminates are available for a reduced price, see Vertical Surface Laminates for available selections. Contact Compatico Project Management for pricing.

DIMENSIONS Height	Width	PRODUCT NUMBER	LIST PRICE	COM Fabric	Exclusive and Value Fabric	Grade 2 Fabric	Grade 3 Fabric	Grade 4 Fabric
32H	12W	THMB132.12	$250.00	-$32	-$16	+$38	+$84	+$122
	18W	THMB132.18	255.00					
	24W	THMB132.24	261.00					
	30W	THMB132.30	323.00					
	36W	THMB132.36	344.00					
	42W	THMB132.42	362.00					
	48W	THMB132.48	376.00					
	60W	THMB132.60	472.00					
39H	12W	THMB139.12	$241.00	-$32	-$16	+$46	+$99	+$145
	18W	THMB139.18	261.00					
	24W	THMB139.24	267.00					
	30W	THMB139.30	288.00					
	36W	THMB139.36	352.00					
	42W	THMB139.42	367.00					
	48W	THMB139.48	384.00					
	60W	THMB139.60	413.00					
47H	12W	THMB147.12	$260.00	-$36	-$20	+$54	+$116	+$171
	18W	THMB147.18	284.00					
	24W	THMB147.24	291.00					
	30W	THMB147.30	310.00					
	36W	THMB147.36	379.00					
	42W	THMB147.42	400.00					
	48W	THMB147.48	416.00					
	60W	THMB147.60	449.00					
53H	12W	THMB153.12	$272.00	-$47	-$24	+$60	+$129	+$188
	18W	THMB153.18	296.00					
	24W	THMB153.24	304.00					
	30W	THMB153.30	321.00					
	36W	THMB153.36	403.00					
	42W	THMB153.42	418.00					
	48W	THMB153.48	437.00					
	60W	THMB153.60	475.00					
67H	12W	THMB167.12	$307.00	-$60	-$30	+$73	+$159	+$234
	18W	THMB167.18	331.00					
	24W	THMB167.24	338.00					
	30W	THMB167.30	358.00					
	36W	THMB167.36	459.00					
	42W	THMB167.42	475.00					
	48W	THMB167.48	503.00					
	60W	THMB167.60	542.00					
85H	12W	THMB185.12	$358.00	-$74	-$37	+$92	+$199	+$290
	18W	THMB185.18	390.00					
	24W	THMB185.24	399.00					
	30W	THMB185.30	419.00					
	36W	THMB185.36	553.00					
	42W	THMB185.42	586.00					
	48W	THMB185.48	601.00					
	60W	THMB185.60	650.00					

Fabric Covered Panels
with TAAC™ construction
non-powered base

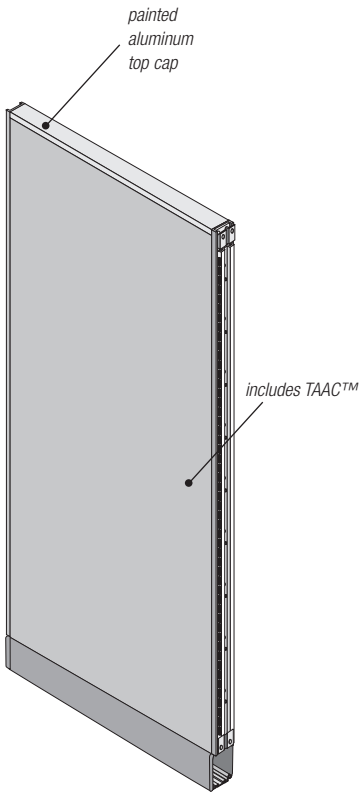

DESCRIPTION: Panel is UL listed and electrical components are UL listed and CSA certified. Structural Panel includes a painted top cap, fabric surface, & wire management raceway with side covers and adjustable glides. Connectors not included. Panel is TAAC™ surfaced with fabric overlay. TAAC™ is a new construction offering tackable and acoustical properties. Fabric yardage assumes directional application (minimum 66" usable width). Special fabrics may affect yardage required. **SPECIFY:** Product Number, Trim Finish, and Fabric. **NOTE:** Panel to panel connectors available in DT (Dark Tone) only and must be ordered separately. **NOTE:** List Pricing is based on Standard Grade 1 Laminates from Wilsonart®, Nevamar®, Pionite®, and Formica®. Value Vertical HPL Laminates are available for a reduced price, see Vertical Surface Laminates for available selections. Contact Compatico Project Management for pricing.

Compatico Systems Terms & Conditions
Surface Materials
AO2
CMW
G2/Genesis & Benching
Frames
Hush
FreshFIT
Electrical
Storage
Worksurfaces
Conference & Training Tables
Legs
Height Adjustable Legs
Accessories
FS Desking & Seating
References

Compatico Systems Terms & Conditions
Surface Materials
AO2
CMW
G2/Genesis & Benching
Frames
Hush
FreshFIT
Electrical
Storage
Worksurfaces
Conference & Training Tables
Legs
Height Adjustable Legs
Accessories
FS Desking & Seating
References

Fabric Covered Panels

with TAAC™ construction
powered base
Byrne 4 circuit/8 wire electrical

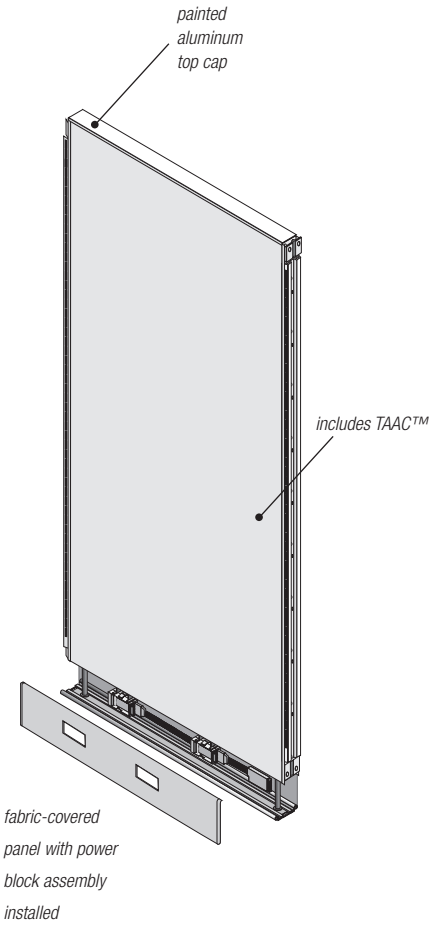

DIMENSIONS		PRODUCT NUMBER	LIST PRICE	COM Fabric	Exclusive and Value Fabric	Grade 2 Fabric	Grade 3 Fabric	Grade 4 Fabric
Height	Width							
32H	24W	THMC132.24	$429.00	-$32	-$16	+$38	+$84	+$122
	30W	THMC132.30	478.00					
	36W	THMC132.36	511.00					
	42W	THMC132.42	521.00					
	48W	THMC132.48	537.00					
	60W	THMC132.60	668.00					
39H	24W	THMC139.24	$377.00	-$32	-$16	+$46	+$99	+$145
	30W	THMC139.30	421.00					
	36W	THMC139.36	501.00					
	42W	THMC139.42	530.00					
	48W	THMC139.48	553.00					
	60W	THMC139.60	583.00					
47H	24W	THMC147.24	$401.00	-$36	-$20	+$54	+$116	+$171
	30W	THMC147.30	443.00					
	36W	THMC147.36	529.00					
	42W	THMC147.42	555.00					
	48W	THMC147.48	576.00					
	60W	THMC147.60	620.00					
53H	24W	THMC153.24	$413.00	-$47	-$24	+$60	+$129	+$188
	30W	THMC153.30	458.00					
	36W	THMC153.36	560.00					
	42W	THMC153.42	592.00					
	48W	THMC153.48	613.00					
	60W	THMC153.60	661.00					
67H	24W	THMC167.24	$445.00	-$60	-$30	+$73	+$159	+$234
	30W	THMC167.30	494.00					
	36W	THMC167.36	623.00					
	42W	THMC167.42	657.00					
	48W	THMC167.48	682.00					
	60W	THMC167.60	737.00					
85H	24W	THMC185.24	$508.00	-$74	-$37	+$92	+$199	+$290
	30W	THMC185.30	557.00					
	36W	THMC185.36	726.00					
	42W	THMC185.42	760.00					
	48W	THMC185.48	782.00					
	60W	THMC185.60	846.00					

DESCRIPTION: Panel is UL listed and electrical components are UL listed and CSA certified. TAAC™ Structural Panel includes a painted top cap, fabric surface, & wire management raceway with side covers and adjustable glides. TAAC™ is a new construction offering tackable and acoustical properties. Powered panels include appropriate size electrical distribution assembly (4-circuit/8 wire) and 2 electrical outlet covers. Refer to electrical pages for duplex receptacles and other System 4 (4-circuit/8 wire) electrical products. Order end cap to finish exposed panel end. Connectors not included. Fabric yardage assumes directional application (minimum 66" usable width). Special fabrics may affect yardage required. **SPECIFY:** Product Number, Trim Finish, and Fabric. **NOTE:** Panel to panel connectors available in DT (Dark Tone) only and must be ordered separately.

DIMENSIONS Height	DIMENSIONS Width	PRODUCT NUMBER	LIST PRICE	COM Fabric	Exclusive and Value Fabric	Grade 2 Fabric	Grade 3 Fabric	Grade 4 Fabric
32H	24W	THMD132.24	$336.00	-$32	-$16	+$38	+$84	+$122
	30W	THMD132.30	375.00					
	36W	THMD132.36	407.00					
	42W	THMD132.42	411.00					
	48W	THMD132.48	424.00					
39H	24W	THMD139.24	$284.00	-$32	-$16	+$46	+$99	+$145
	30W	THMD139.30	317.00					
	36W	THMD139.36	397.00					
	42W	THMD139.42	420.00					
	48W	THMD139.48	439.00					
47H	24W	THMD147.24	$309.00	-$36	-$20	+$54	+$116	+$171
	30W	THMD147.30	340.00					
	36W	THMD147.36	425.00					
	42W	THMD147.42	445.00					
	48W	THMD147.48	463.00					
53H	24W	THMD153.24	$320.00	-$47	-$24	+$60	+$129	+$188
	30W	THMD153.30	354.00					
	36W	THMD153.36	456.00					
	42W	THMD153.42	482.00					
	48W	THMD153.48	500.00					
67H	24W	THMD167.24	$352.00	-$60	-$30	+$73	+$159	+$234
	30W	THMD167.30	390.00					
	36W	THMD167.36	519.00					
	42W	THMD167.42	546.00					
	48W	THMD167.48	569.00					
85H	24W	THMD185.24	$415.00	-$74	-$37	+$92	+$199	+$290
	30W	THMD185.30	453.00					
	36W	THMD185.36	623.00					
	42W	THMD185.42	650.00					
	48W	THMD185.48	669.00					

DESCRIPTION: Panel is UL listed and electrical components are UL listed and CSA certified. TAAC™ Structural Panel includes a painted top cap, fabric surface, & wire management raceway with side covers and adjustable glides. TAAC™ is a new construction offering tackable and acoustical properties. Powered panels include appropriate size electrical distribution assembly (3-circuit/5 wire) and 2 electrical outlet covers. Refer to electrical pages for duplex receptacles and other System 4 (3-circuit/5 wire) electrical products. Order end cap to finish exposed panel end. Connectors not included. Fabric yardage assumes directional application (minimum 66" usable width). Special fabrics may affect yardage required. **SPECIFY:** Product Number, Trim Finish, and Fabric. **NOTE:** Panel to panel connectors available in DT (Dark Tone) only and must be ordered separately.

Fabric Covered Panels
with TAAC™ construction
powered base
Byrne 3 circuit/5 wire electrical

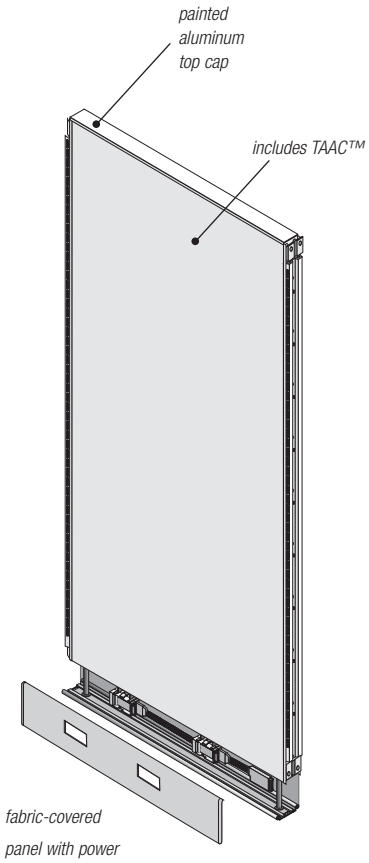

Note: Order panel-to-panel electrical jumper separately.

Compatico Systems Terms & Conditions
Surface Materials
AO2
CMW
G2/Genesis & Benching
Frames
Hush
FreshFIT
Electrical
Storage
Worksurfaces
Conference & Training Tables
Legs
Height Adjustable Legs
Accessories
FS Desking & Seating
References

Compatico Systems Terms & Conditions
Surface Materials
AO2
CMW
G2/Genesis & Benching
Frames
Hush
FreshFIT
Electrical
Storage
Worksurfaces
Conference & Training Tables
Legs
Height Adjustable Legs
Accessories
FS Desking & Seating
References

Full Glazed Panel

non-powered and powered base

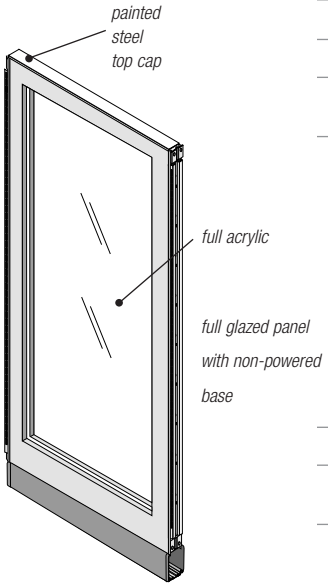

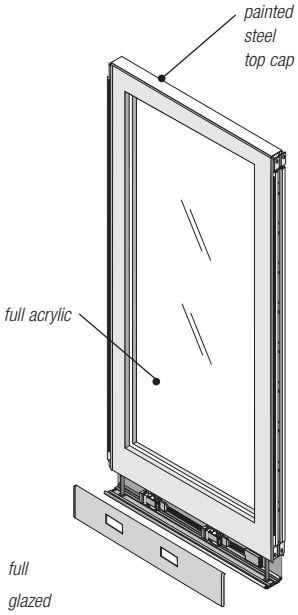

full glazed panel with power block assembly installed

Note: For Byrne 5/3 electrical must order panel-to-panel jumper separately.

DIMENSIONS Height	DIMENSIONS Width	PRODUCT NUMBER	LIST PRICE	PRODUCT NUMBER	LIST PRICE	PRODUCT NUMBER	LIST PRICE
GLAZED PANEL - CLEAR							
		NON-POWERED		**POWERED 8 WIRE/4 CIRCUIT**		**POWERED 5 WIRE/3 CIRCUIT**	
67H	24W	HMB667.24	$795.00	HMC667.24	$924.00	HMD667.24	*$831.00*
	30W	HMB667.30	864.00	HMC667.30	1,023.00	HMD667.30	*919.00*
	36W	HMB667.36	959.00	HMC667.36	1,157.00	HMD667.36	*1,053.00*
	48W	HMB667.48	1,062.00	HMC667.48	1,243.00	HMD667.48	*1,133.00*
85H	24W	HMB685.24	$983.00	HMC685.24	$1,108.00	HMD685.24	*$1,015.00*
	30W	HMB685.30	1,068.00	HMC685.30	1,226.00	HMD685.30	*1,122.00*
	36W	HMB685.36	1,163.00	HMC685.36	1,336.00	HMD685.36	*1,232.00*
	48W	HMB685.48	1,336.00	HMC685.48	1,518.00	HMD685.48	*1,408.00*
GLAZED PANEL - SMOKED							
		NON-POWERED		**POWERED 8 WIRE/4 CIRCUIT**		**POWERED 5 WIRE/3 CIRCUIT**	
67H	24W	HMB767.24	$843.00	HMC767.24	$971.00	HMD767.24	*$878.00*
	30W	HMB767.30	935.00	HMC767.30	1,089.00	HMD767.30	*985.00*
	36W	HMB767.36	1,112.00	HMC767.36	1,306.00	HMD767.36	*1,202.00*
	48W	HMB767.48	1,157.00	HMC767.48	1,351.00	HMD767.48	
85H	24W	HMB785.24	$1,076.00	HMC785.24	$1,205.00	HMD785.24	1,112.00
	30W	HMB785.30	1,165.00	HMC785.30	1,320.00	HMD785.30	1,216.00
	36W	HMB785.36	1,312.00	HMC785.36	1,483.00	HMD785.36	1,379.00
	48W	HMB785.48	1,521.00	HMC785.48	1,703.00	HMD785.48	1,593.00
GLAZED PANEL - FROSTED							
		NON-POWERED		**POWERED 8 WIRE/4 CIRCUIT**		**POWERED 5 WIRE/3 CIRCUIT**	
67H	24W	FMB667.24	1,138.00	FMC667.24	$2,018.00	FMD667.24	*$1,926.00*
	30W	FMB667.30	1,925.00	FMC667.30	2,113.00	FMD667.30	*2,009.00*
	36W	FMB667.36	1,797.00	FMC667.36	2,158.00	FMD667.36	*2,054.00*
	48W	FMB667.48	2,043.00	FMC667.48	2,261.00	FMD667.48	*2,151.00*

DESCRIPTION: Structural Panel includes a painted top cap, acrylic, wire management raceway with side covers and adjustable glides. Powered panels include appropriate size electrical distribution assembly (4- circuit/8 wire) and 2 electrical outlet covers. Refer to electrical pages for duplex receptacles and other system (4-circuit/8 wire) electrical products. Order end cap to finish exposed panel end. Connectors not included. **SPECIFY:** Product Number, Trim Finish, Base Cover Finish and Glazing Strip Finishes. **NOTE:** Panel to panel connectors available in DT (Dark Tone) only and must be ordered separately.

DIMENSIONS Height	DIMENSIONS Width	PRODUCT NUMBER	LIST PRICE	COM Fabric	Exclusive and Value Fabric	Grade 2 Fabric	Grade 3 Fabric	Grade 4 Fabric
GLAZED PANEL - CLEAR								
67H	24W	THHB467.24	$822.00	-$38	-$20	+$41	+$91	+$132
	30W	THHB467.30	859.00					
	36W	THHB467.36	981.00					
	48W	THHB467.48	1,085.00					
85H	24W	THHB485.24	$930.00	-$38	-$20	+$41	+$91	+$132
	30W	THHB485.30	988.00					
	36W	THHB485.36	1,094.00					
	48W	THHB485.48	1,270.00					
GLAZED PANEL - SMOKED								
67H	24W	THHB567.24	$876.00	-$38	-$20	+$41	+$91	+$132
	30W	THHB567.30	914.00					
	36W	THHB567.36	1,057.00					
	48W	THHB567.48	1,155.00					
85H	24W	THHB585.24	$938.00	-$38	-$20	+$41	+$91	+$132
	30W	THHB585.30	1,058.00					
	36W	THHB585.36	1,176.00					
	48W	THHB585.48	1,344.00					
GLAZED PANEL - FROSTED								
67H	24W	TFHB467.24	$932.00	-$38	-$20	+$41	+$91	+$132
	30W	TFHB467.30	956.00					
	36W	TFHB467.36	1,179.00					
	48W	TFHB467.48	1,320.00					
85H	24W	TFHB485.24	$1,023.00	-$38	-$20	+$41	+$91	+$132
	30W	TFHB485.30	1,371.00					
	36W	TFHB485.36	1,438.00					
	48W	TFHB485.48	1,601.00					

DESCRIPTION: TAAC™ Structural Panel includes a painted top cap, acrylic and fabric surfaces, wire management raceway with side covers and adjustable glides. TAAC™ is a new construction offering tackable and acoustical properties. Order end cap to finish exposed panel end. Connectors not included. Fabric yardage assumes directional application (minimum 66" usable width). Special fabrics may affect yardage required. Acrylic begins approximately 39" from panel bottom.

SPECIFY: Product Number, Trim Finish, Base Cover Finish, Glazing Color, Fabric Name and Grade.

NOTE: Panel to panel connectors available in DT (Dark Tone) only and must be ordered separately.

Half-Glazed Panel
with TAAC™ construction
non-powered base

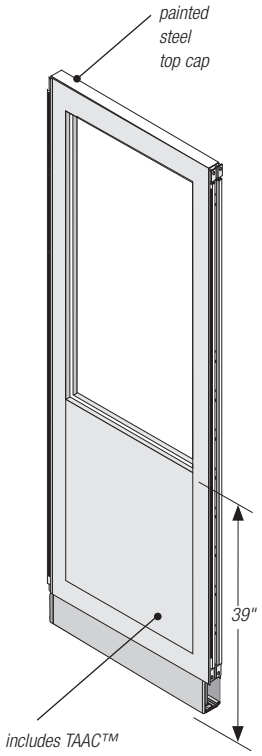

Compatico Systems Terms & Conditions
Surface Materials
AO2
CMW
G2/Genesis & Benching
Frames
Hush
FreshFIT
Electrical
Storage
Worksurfaces
Conference & Training Tables
Legs
Height Adjustable Legs
Accessories
FS Desking & Seating
References

Compatico Systems Terms & Conditions
Surface Materials
AO2
CMW
G2/Genesis & Benching
Frames
Hush
FreshFIT
Electrical
Storage
Worksurfaces
Conference & Training Tables
Legs
Height Adjustable Legs
Accessories
FS Desking & Seating
References

Half-Glazed Panel
with TAAC™ construction
powered base
Byrne 4 circuit/8 wire electrical

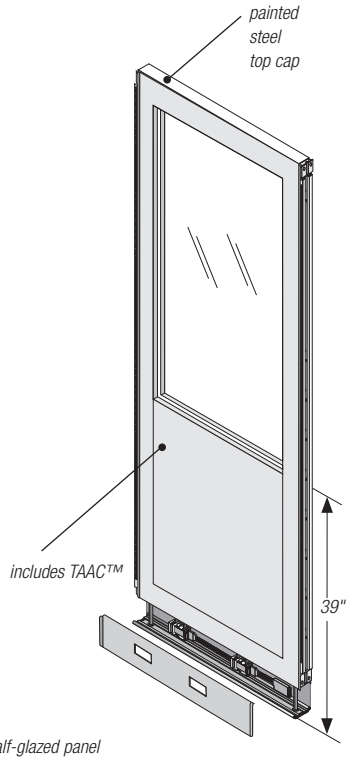

half-glazed panel with power block assembly installed

DIMENSIONS		PRODUCT NUMBER	LIST PRICE	COM Fabric	Exclusive and Value Fabric	Grade 2 Fabric	Grade 3 Fabric	Grade 4 Fabric
Height	Width							
GLAZED PANEL - CLEAR								
67H	24W	THHC467.24	$934.00	-$38	-$20	+$41	+$91	+$132
	30W	THHC467.30	1,013.00					
	36W	THHC467.36	1,152.00					
	48W	THHC467.48	1,585.00					
85H	24W	THHC485.24	$1,058.00	-$38	-$20	+$41	+$91	+$132
	30W	THHC485.30	1,172.00					
	36W	THHC485.36	1,303.00					
	48W	THHC485.48	1,451.00					
GLAZED PANEL - SMOKED								
67H	24W	THHC567.24	$1,122.00	-$38	-$20	+$41	+$91	+$132
	30W	THHC567.30	1,168.00					
	36W	THHC567.36	1,199.00					
	48W	THHC567.48	1,337.00					
85H	24W	THHC585.24	$1,102.00	-$38	-$20	+$41	+$91	+$132
	30W	THHC585.30	1,427.00					
	36W	THHC585.36	1,534.00					
	48W	THHC585.48	1,777.00					
GLAZED PANEL - FROSTED								
67H	24W	TFHC467.24	$1,072.00	-$38	-$20	+$41	+$91	+$132
	30W	TFHC467.30	1,418.00					
	36W	TFHC467.36	1,477.00					
	48W	TFHC467.48	1,626.00					
85H	24W	TFHC485.24	$1,353.00	-$38	-$20	+$41	+$91	+$132
	30W	TFHC485.30	1,529.00					
	36W	TFHC485.36	1,635.00					
	48W	TFHC485.48	1,736.00					

DESCRIPTION: TAAC™ Structural Panel includes a painted top cap, acrylic and fabric surfaces, wire management raceway with side covers and adjustable glides. TAAC™ is a new construction offering tackable and acoustical properties. Powered panels include appropriate size electrical distribution assembly (4-circuit/8 wire) and 2 electrical outlet covers. Refer to electrical pages for duplex receptacles and other system (4-circuit/8 wire) electrical products. Order end cap to finish exposed panel end. Connectors not included. Fabric yardage assumes directional application (minimum 66" usable width). Special fabrics may affect yardage required. Acrylic begins approximately 39" from panel bottom.

SPECIFY: Product Number, Trim Finish, Base Cover Finish, Glazing Color, Fabric Name and Grade.

NOTE: Panel to panel connectors available in DT (Dark Tone) only and must be ordered separately.

DIMENSIONS Height	DIMENSIONS Width	PRODUCT NUMBER	LIST PRICE	COM Fabric	Exclusive and Value Fabric	Grade 2 Fabric	Grade 3 Fabric	Grade 4 Fabric
GLAZED PANEL - CLEAR								
67H	24W	THHD467.24	$842.00	-$38	-$20	+$41	+$91	+$132
	30W	THHD467.30	909.00					
	36W	THHD467.36	1,049.00					
	48W	THHD467.4 8	1,151.00					
85H	24W	THHD485.24	$965.00	-$38	-$20	+$41	+$91	+$132
	30W	THHD485.30	1,068.00					
	36W	THHD485.36	1,199.00					
	48W	THHD485.48	1,338.00					
GLAZED PANEL - SMOKED								
67H	24W	THHD567.24	$1,029.00	-$38	-$20	+$41	+$91	+$132
	30W	THHD567.30	1,064.00					
	36W	THHD567.36	1,095.00					
	48W	THHD567.48	1,223.00					
85H	24W	THHD585.24	$1,009.00	-$38	-$20	+$41	+$91	+$132
	30W	THHD585.30	1,323.00					
	36W	THHD585.36	1,430.00					
	48W	THHD585.48	1,664.00					
GLAZED PANEL - FROSTED								
67H	24W	TFHD467.24	$980.00	-$38	-$20	+$41	+$91	+$132
	30W	TFHD467.30	1,314.00					
	36W	TFHD467.36	1,373.00					
	48W	TFHD467.48	1,513.00					
85H	24W	TFHD485.24	$1,260.00	-$38	-$20	+$41	+$91	+$132
	30W	TFHD485.30	1,425.00					
	36W	TFHD485.36	1,531.00					
	48W	TFHD485.48	1,623.00					

DESCRIPTION: TAAC™ Structural Panel includes a painted top cap, acrylic and fabric surfaces, wire management raceway with side covers and adjustable glides. TAAC™ is a new construction offering tackable and acoustical properties. Powered panels include appropriate size electrical distribution assembly (3-circuit/5 wire) and 2 electrical outlet covers. Refer to electrical pages for duplex receptacles and other system (3-circuit/5 wire) electrical products. Order end cap to finish exposed panel end. Connectors not included. Fabric yardage assumes directional application (minimum 66" usable width). Special fabrics may affect yardage required. Acrylic begins approximately 39" from panel bottom.

SPECIFY: Product Number, Trim Finish, Base Cover Finish, Glazing Color, Fabric Name and Grade.

NOTE: Panel to panel connectors available in DT (Dark Tone) only and must be ordered separately.

Half-Glazed Panel
with TAAC™ construction
powered base
Byrne 3 circuit/5 wire electrical

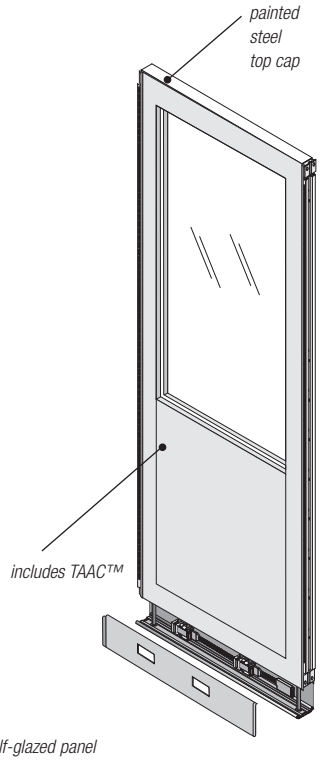

half-glazed panel with power block assembly installed

Note: For Byrne 3/5 system panel-to-panel jumper ordered separately.

Compatico Systems Terms & Conditions
Surface Materials
AO2
CMW
G2/Genesis & Benching
Frames
Hush
FreshFIT
Electrical
Storage
Worksurfaces
Conference & Training Tables
Legs
Height Adjustable Legs
Accessories
FS Desking & Seating
References

Compatico Systems Terms & Conditions
Surface Materials
AO2
CMW
G2/Genesis & Benching
Frames
Hush
FreshFIT
Electrical
Storage
Worksurfaces
Conference & Training Tables
Legs
Height Adjustable Legs
Accessories
FS Desking & Seating
References

Partial Glazed Panel
with TAAC™ construction
non-powered base

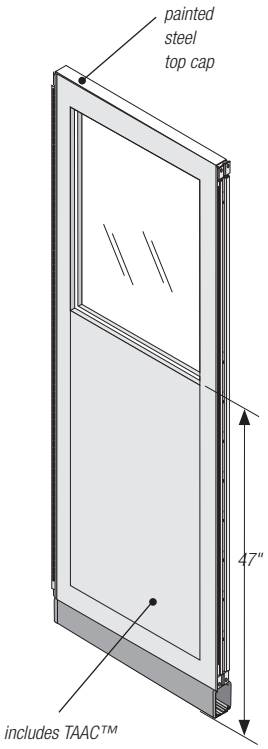

DIMENSIONS Height	DIMENSIONS Width	PRODUCT NUMBER	LIST PRICE	COM Fabric	Exclusive and Value Fabric	Grade 2 Fabric	Grade 3 Fabric	Grade 4 Fabric
GLAZED PANEL - CLEAR								
67H	24W	THMB467.24	$839.00	-$38	-$20	+$52	+$114	+$167
	30W	THMB467.30	871.00					
	36W	THMB467.36	966.00					
	48W	THMB467.48	1,084.00					
85H	24W	THMB485.24	$967.00	-$38	-$20	+$52	+$114	+$167
	30W	THMB485.30	1,026.00					
	36W	THMB485.36	1,125.00					
	48W	THMB485.48	1,255.00					
GLAZED PANEL - SMOKED								
67H	24W	THMB567.24	$852.00	-$38	-$20	+$52	+$114	+$167
	30W	THMB567.30	886.00					
	36W	THMB567.36	1,003.00					
	48W	THMB567.48	1,133.00					
85H	24W	THMB585.24	$933.00	-$38	-$20	+$52	+$114	+$167
	30W	THMB585.30	1,005.00					
	36W	THMB585.36	1,119.00					
	48W	THMB585.48	1,243.00					
GLAZED PANEL - FROSTED								
67H	24W	TFMB467.24	$882.00	-$38	-$20	+$52	+$114	+$167
	30W	TFMB467.30	953.00					
	36W	TFMB467.36	1,049.00					
	48W	TFMB467.48	1,375.00					
85H	24W	TFMB485.24	$1,064.00	-$38	-$20	+$52	+$114	+$167
	30W	TFMB485.30	1,221.00					
	36W	TFMB485.36	1,424.00					
	48W	TFMB485.48	1,548.00					

DESCRIPTION: TAAC™ Structural Panel includes a painted top cap, acrylic and fabric surfaces, wire management raceway with side covers and adjustable glides. TAAC™ is a new construction offering tackable and acoustical properties. Order end cap to finish exposed panel end. Connectors not included. Fabric yardage assumes directional application (minimum 66" usable width). Special fabrics may affect yardage required. Acrylic begins approximately 47" from panel bottom.

SPECIFY: Product Number, Trim Finish, Base Cover Finish, Glazing Color, Fabric Name and Grade.

NOTE: Panel to panel connectors available in DT (Dark Tone) only and must be ordered separately.

DIMENSIONS Height	DIMENSIONS Width	PRODUCT NUMBER	LIST PRICE	COM Fabric	Exclusive and Value Fabric	Grade 2 Fabric	Grade 3 Fabric	Grade 4 Fabric
GLAZED PANEL - CLEAR								
67H	24W	THMC467.24	$951.00	-$38	-$20	+$52	+$114	+$167
	30W	THMC467.30	1,028.00					
	36W	THMC467.36	1,130.00					
	48W	THMC467.48	1,271.00					
85H	24W	THMC485.24	$1,100.00	-$38	-$20	+$52	+$114	+$167
	30W	THMC485.30	1,190.00					
	36W	THMC485.36	1,310.00					
	48W	THMC485.48	1,453.00					
GLAZED PANEL - SMOKED								
67H	24W	THMC567.24	$1,130.00	-$38	-$20	+$52	+$114	+$167
	30W	THMC567.30	1,218.00					
	36W	THMC567.36	1,273.00					
	48W	THMC567.48	1,306.00					
85H	24W	THMC585.24	$1,318.00	-$38	-$20	+$52	+$114	+$167
	30W	THMC585.30	1,339.00					
	36W	THMC585.36	1,381.00					
	48W	THMC585.48	1,525.00					
GLAZED PANEL - FROSTED								
67H	24W	TFMC467.24	$996.00	-$38	-$20	+$52	+$114	+$167
	30W	TFMC467.30	1,292.00					
	36W	TFMC467.36	1,429.00					
	48W	TFMC467.48	1,593.00					
85H	24W	TFMC485.24	$1,195.00	-$38	-$20	+$52	+$114	+$167
	30W	TFMC485.30	1,392.00					
	36W	TFMC485.36	1,613.00					
	48W	TFMC485.48	1,758.00					

DESCRIPTION: TAAC™ Structural Panel includes a painted top cap, acrylic and fabric surfaces, wire management raceway with side covers and adjustable glides. TAAC™ is a new construction offering tackable and acoustical properties. Powered panels include appropriate size electrical distribution assembly (4-circuit/8 wire) and 2 electrical outlet covers. Refer to electrical pages for duplex receptacles and other system (4-circuit/8 wire) electrical products. Order end cap to finish exposed panel end. Connectors not included. Fabric yardage assumes directional application (minimum 66" usable width). Special fabrics may affect yardage required. Acrylic begins approximately 47" from panel bottom. **SPECIFY:** Product Number, Trim Finish, Base Cover Finish, Glazing Color, Fabric Name and Grade. **NOTE:** Panel to panel connectors available in DT (Dark Tone) only and must be ordered separately.

Partial Glazed Panel
with TAAC™ construction
powered base
Byrne 4 circuit/8 wire electrical

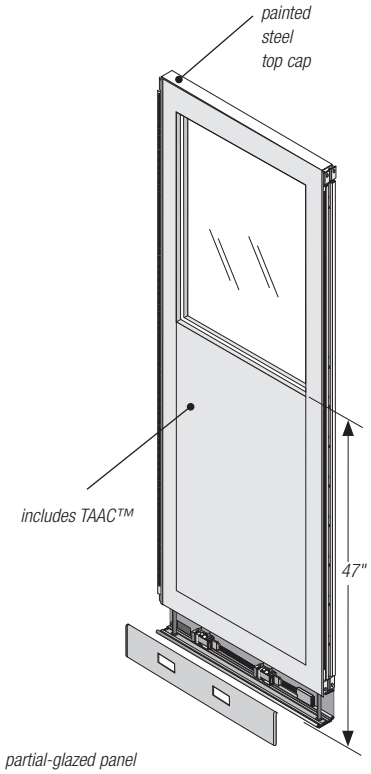

partial-glazed panel
with power block
assembly installed

Compatico Systems Terms & Conditions
Surface Materials
AO2
CMW
G2/Genesis & Benching
Frames
Hush
FreshFIT
Electrical
Storage
Worksurfaces
Conference & Training Tables
Legs
Height Adjustable Legs
Accessories
FS Desking & Seating
References

Compatico Systems Terms & Conditions
Surface Materials
AO2
CMW
G2/Genesis & Benching
Frames
Hush
FreshFIT
Electrical
Storage
Worksurfaces
Conference & Training Tables
Legs
Height Adjustable Legs
Accessories
FS Desking & Seating
References

Partial Glazed Panel
with TAAC™ construction
powered base
Byrne 3 circuit/5 wire electrical

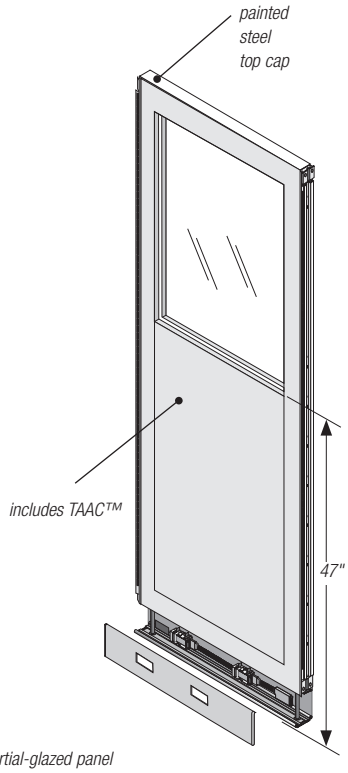

partial-glazed panel with power block assembly installed

Note: When using Byrne 5/3 electrical must order poanel-to-panel electrical jumpers separately.

DIMENSIONS Height	DIMENSIONS Width	PRODUCT NUMBER	LIST PRICE	COM Fabric	Exclusive and Value Fabric	Grade 2 Fabric	Grade 3 Fabric	Grade 4 Fabric
GLAZED PANEL - CLEAR								
67H	24W	THMD467.24	$858.00	-$38	-$20	+$52	+$114	+$167
	30W	THMD467.30	924.00					
	36W	THMD467.36	1,026.00					
	48W	THMD467.48	1,158.00					
85H	24W	THMD485.24	$1,007.00	-$38	-$20	+$52	+$114	+$167
	30W	THMD485.30	1,086.00					
	36W	THMD485.36	1,206.00					
	48W	THMD485.48	1,340.00					
GLAZED PANEL - SMOKED								
67H	24W	THMD567.24	$1,037.00	-$38	-$20	+$52	+$114	+$167
	30W	THMD567.30	1,114.00					
	36W	THMD567.36	1,169.00					
	48W	THMD567.48	1,193.00					
85H	24W	THMD585.24	$1,226.00	-$38	-$20	+$52	+$114	+$167
	30W	THMD585.30	1,235.00					
	36W	THMD585.36	1,277.00					
	48W	THMD585.48	1,412.00					
GLAZED PANEL - FROSTED								
67H	24W	TFMD467.24	$903.00	-$38	-$20	+$52	+$114	+$167
	30W	TFMD467.30	1,188.00					
	36W	TFMD467.36	1,325.00					
	48W	TFMD467.48	1,480.00					
85H	24W	TFMD485.24	$1,101.00	-$38	-$20	+$52	+$114	+$167
	30W	TFMD485.30	1,288.00					
	36W	TFMD485.36	1,510.00					
	48W	TFMD485.48	1,644.00					

DESCRIPTION: TAAC™ Structural Panel includes a painted top cap, acrylic and fabric surfaces, wire management raceway with side covers and adjustable glides. TAAC™ is a new construction offering tackable and acoustical properties. Powered panels include appropriate size electrical distribution assembly (3-circuit/5 wire) and 2 electrical outlet covers. Refer to electrical pages for duplex receptacles and other system (3-circuit/5 wire) electrical products. Order end cap to finish exposed panel end. Connectors not included. Fabric yardage assumes directional application (minimum 66" usable width). Special fabrics may affect yardage required. Acrylic begins approximately 47" from panel bottom.

SPECIFY: Product Number, Trim Finish, Base Cover Finish, Glazing Color, Fabric Name and Grade.

NOTE: Panel to panel connectors available in DT (Dark Tone) only and must be ordered separately.

DIMENSIONS Height	Width	PRODUCT NUMBER	LIST PRICE	COM Fabric	Exclusive and Value Fabric	Grade 2 Fabric	Grade 3 Fabric	Grade 4 Fabric
47H 34"+8"	24W	THBB147.24	$391.00	-$60	-$30	+$54	+$154	+$304
	30W	THBB147.30	415.00					
	36W	THBB147.36	459.00					
	42W	THBB147.42	495.00					
	48W	THBB147.48	506.00					
	60W	THBB147.60	551.00					
53H 34"+14"	24W	THBB153.24	$449.00	-$72	-$36	+$60	+$165	+$330
	30W	THBB153.30	473.00					
	36W	THBB153.36	497.00					
	42W	THBB153.42	512.00					
	48W	THBB153.48	556.00					
	60W	THBB153.60	581.00					
53H 42"+6"	24W	THBB453.24	$456.00	-$64	-$32	+$60	+$171	+$335
	30W	THBB453.30	449.00					
	36W	THBB453.36	511.00					
	42W	THBB453.42	528.00					
	48W	THBB453.48	564.00					
	60W	THBB453.60	671.00					
67H 48"+14"	24W	THBB167.24	$366.00	-$94	-$47	+$77	+$267	+$426
	30W	THBB167.30	457.00					
	36W	THBB167.36	570.00					
	42W	THBB167.42	609.00					
	48W	THBB167.48	629.00					
	60W	THBB167.60	680.00					
67H 34"+14"+14"	24W	THBB467.24	$605.00	-$104	-$49	+$79	+$225	+$448
	30W	THBB467.30	628.00					
	36W	THBB467.36	670.00					
	42W	THBB467.42	716.00					
	48W	THBB467.48	750.00					
	60W	THBB467.60	812.00					
85H 62"+18"	24W	THBB185.24	$581.00	-$119	-$60	+$100	+$282	+$565
	30W	THBB185.30	610.00					
	36W	THBB185.36	649.00					
	42W	THBB185.42	682.00					
	48W	THBB185.48	704.00					
	60W	THBB185.60	882.00					
85H 48"+14"+18"	24W	THBB485.24	$567.00	-$119	-$60	+$100	+$282	+$565
	30W	THBB485.30	601.00					
	36W	THBB485.36	782.00					
	42W	THBB485.42	826.00					
	48W	THBB485.48	851.00					
	60W	THBB485.60	911.00					

DESCRIPTION: TAAC™ Structural Fabric Panel includes 1 or 2 stack segments plus bottom base panel. Panel has a painted aluminum top cap and wire management raceway with side covers and adjustable glides. TAAC™ is a new construction offering tackable and acoustical properties.

SPECIFY: Product Number, Trim Finish, Base Trim Finish, Fabric Name, and Grade of fabric to be applied onto each stacker. **NOTE:** Panel to panel connectors available in DT (Dark Tone) only and must be ordered separately.

A02 Fabric Panel & Fabric Stacker
with TAAC™ construction
non-powered base

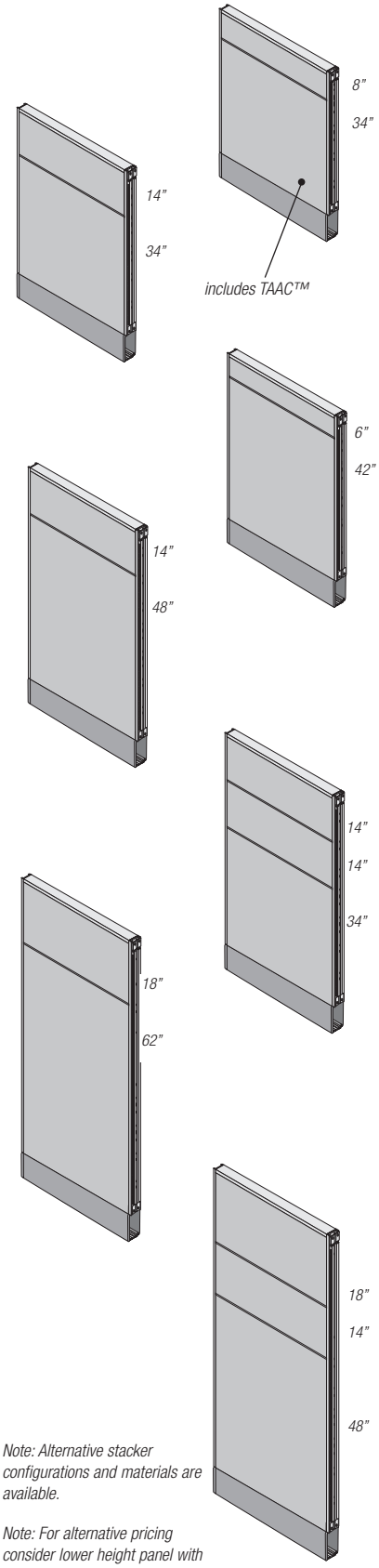

Note: Alternative stacker configurations and materials are available.

Note: For alternative pricing consider lower height panel with taco clip and screen design.

Compatico Systems Terms & Conditions
Surface Materials
AO2
CMW
G2/Genesis & Benching
Frames
Hush
FreshFIT
Electrical
Storage
Worksurfaces
Conference & Training Tables
Legs
Height Adjustable Legs
Accessories
FS Desking & Seating
References

Compatico Systems Terms & Conditions
Surface Materials
AO2
CMW
G2/Genesis & Benching
Frames
Hush
FreshFIT
Electrical
Storage
Worksurfaces
Conference & Training Tables
Legs
Height Adjustable Legs
Accessories
FS Desking & Seating
References

A02 Fabric Panel & Fabric Stacker
with TAAC™ construction
powered base
Byrne 4 circuit/8 wire electrical

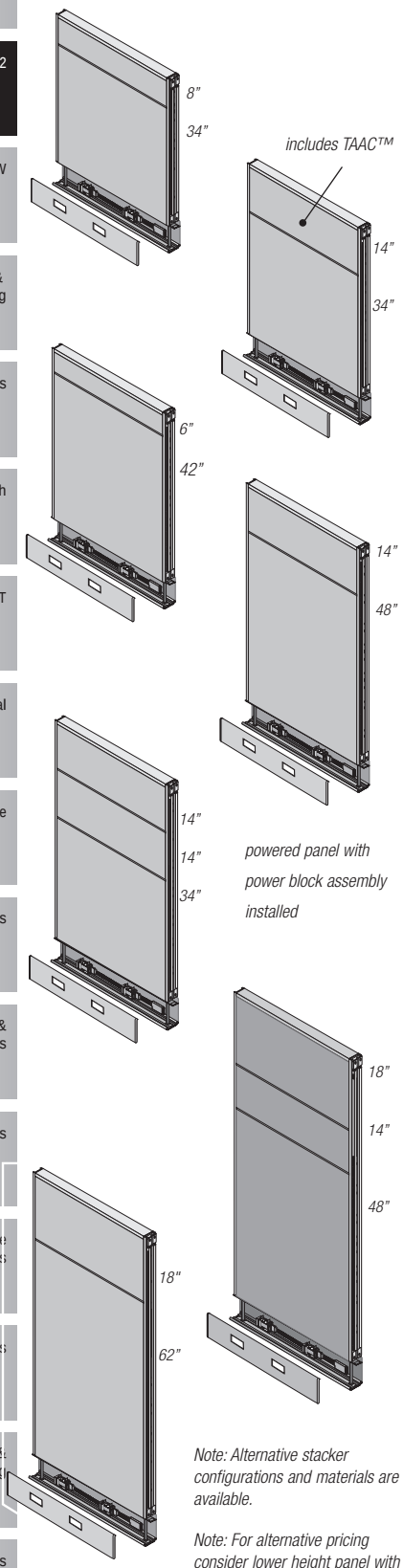

Note: Alternative stacker configurations and materials are available.

Note: For alternative pricing consider lower height panel with taco clip and screen design.

DIMENSIONS		PRODUCT NUMBER	LIST PRICE	COM Fabric	Exclusive and Value Fabric	Grade 2 Fabric	Grade 3 Fabric	Grade 4 Fabric
Height	Width							
47H 34"+8"	24W	THBC147.24	$515.00	-$60	-$30	+$53	+$154	+$304
	30W	THBC147.30	566.00					
	36W	THBC147.36	607.00					
	42W	THBC147.42	647.00					
	48W	THBC147.48	711.00					
	60W	THBC147.60	772.00					
53H 34"+14"	24W	THBC153.24	$593.00	-$72	-$36	+$60	+$165	+$330
	30W	THBC153.30	611.00					
	36W	THBC153.36	658.00					
	42W	THBC153.42	788.00					
	48W	THBC153.48	817.00					
	60W	THBC153.60	879.00					
53H 42"+6"	24W	THBC453.24	$556.00	-$64	-$32	+$60	+$171	+$335
	30W	THBC453.30	614.00					
	36W	THBC453.36	744.00					
	42W	THBC453.42	789.00					
	48W	THBC453.48	818.00					
	60W	THBC453.60	884.00					
67H 48"+14"	24W	THBC167.24	$634.00	-$94	-$47	+$77	+$213	+$426
	30W	THBC167.30	697.00					
	36W	THBC167.36	736.00					
	42W	THBC167.42	780.00					
	48W	THBC167.48	789.00					
	60W	THBC167.60	865.00					
67H 34"+14"+14"	24W	THBC467.24	$717.00	-$104	-$49	+$79	+$223	+$448
	30W	THBC467.30	721.00					
	36W	THBC467.36	838.00					
	42W	THBC467.42	883.00					
	4 8W	THBC467.48	930.00					
	60W	THBC467.60	956.00					
85H 62"+18"	24W	THBC185.24	$706.00	-$119	-$60	+$100	+$282	+$565
	30W	THBC185.30	801.00					
	36W	THBC185.36	826.00					
	42W	THBC185.42	856.00					
	48W	THBC185.48	884.00					
	60W	THBC185.60	1,068.00					
85H 48"+14"+18"	24W	THBC485.24	$777.00	-$119	-$60	+$100	+$282	+$565
	30W	THBC485.30	806.00					
	36W	THBC485.36	1,000.00					
	42W	THBC485.42	1,041.00					
	48W	THBC485.48	1,062.00					
	60W	THBC485.60	1,089.00					

DESCRIPTION: TAAC™ Structural PolyPanel includes 1 or 2 stack segments plus bottom base panel. TAAC™ is a new construction offering tackable and acoustical properties. Panel has a painted aluminum top cap and wire management raceway with side covers and adjustable glides. Powered panels include appropriate size electrical distribution assembly (4-circuit/8 wire) and 2 electrical outlet covers. See electrical pages for duplex receptacles. **SPECIFY:** Product Number, Trim Finish, Base Trim Finish, Fabric Name, and Grade of fabric to be applied onto each stacker. **NOTE:** Panel to panel connectors available in DT (Dark Tone) only and must be ordered separately.