MASSEY FERGUSON®

TRACTORS

TRACTOR INDEX

COMPACT TRACTORS

COMPACT . . . . . MF Compact - 1
GC1705 . . . . . MF Compact - 2
GC1710 . . . . . MF Compact - 4
GC1715 . . . . . MF Compact - 6
GC1720 . . . . . MF Compact - 8

1726E and 1726EL . . . . . MF Compact - 11
1734E and 1734EL . . . . . MF Compact - 14
1739E and 1739EL . . . . . MF Compact - 17
1736 and 1736L . . . . . MF Compact - 21
1742 and 1742L . . . . . MF Compact - 25
1749 and 1749L . . . . . MF Compact - 29
1754 and 1754L . . . . . MF Compact - 33
1758 and 1758L . . . . . MF Compact - 37
1759 and 1759L . . . . . MF Compact - 41
Field Installed Accessories . . . . . MF Compact - 45

1526 and 1526L . . . . . MF Compact - 51

TRACTOR INDEX

MASSEY FERGUSON®

UTILITY TRACTORS

2600 SERIES UTILITY . . . . . MF2600 - 1
2605 and 2605L . . . . . MF2600 - 2
2615 and 2615L . . . . . MF2600 - 5
2635 and 2635L . . . . . MF2600 - 8
Field Installed Accessories . . . . . MF2600 - 11

4600 SERIES UTILITY . . . . . MF4600 - 1
4608 and 4608L . . . . . MF4600 - 2
4609 and 4609L . . . . . MF4600 - 5
4610 and 4610L . . . . . MF4600 - 8
4610LP . . . . . MF4600 - 11
Field Installed Accessories . . . . . MF4600 - 13

TRACTOR INDEX

MID RANGE TRACTORS

5600 SERIES - MID RANGE . . . . . MF5600 - 1
5609, 5610 Small Frame Classic . . . . . MF5600 - 2
5611, 5612, 5613 Large Frame Classic . . . . . MF5600 - 12
5611, 5612, 5613 Large Frame Deluxe . . . . . MF5600 - 22

6600 SERIES - MID RANGE . . . . . MF6600 - 1
6614 / 6615 / 6616 Series . . . . . MF6600 - 2
Classic Editions. . . . . MF6600 - 3
Deluxe Editions . . . . . MF6600 - 16
Premium Editions . . . . . MF6600 - 30

HIGH HORSEPOWER TRACTORS

7600 SERIES - HIGH HORSEPOWER . . . . . MF7600 - 1
7614 (Classic Only) / 7615 / 7616 / 7618 Series . . . . . MF7600 - 4
Classic Editions. . . . . MF7600 - 5
Deluxe Editions . . . . . MF7600 - 20
Premium Editions . . . . . MF7600 - 34

7619 / 7620 / 7622 / 7624 Series . . . . . MF7600 - 48
Classic Editions. . . . . MF7600 - 50
Deluxe Editions . . . . . MF7600 - 60
Premium Editions . . . . . MF7600 - 76

7700 SERIES - HIGH HORSEPOWER . . . . . MF7700 - 1
7719 / 7720 / 7722 / 7724 Series . . . . . MF7700 - 2
Classic Editions. . . . . MF7700 - 4
Deluxe Editions . . . . . MF7700 - 15
Premium Editions . . . . . MF7700 - 31

8600 SERIES - HIGH HORSEPOWER . . . . . MF8600 - 1
8650 . . . . . MF8600 - 4
8660 . . . . . MF8600 - 12
8670 . . . . . MF8600 - 20
8680 . . . . . MF8600 - 28
8690 . . . . . MF8600 - 36
Wheel Tread Settings . . . . . MF8600 - 45

8700 SERIES - HIGH HORSEPOWER . . . . . MF8600 - 1
8727, 8730, 8732, 8735, 8737 . . . . . MF8600 - 4
Wheel Tread Settings . . . . . MF8600 - 20

MASSEY FERGUSON®

COMPACT

GC1705 GARDEN COMPACT

Mississippi State Contract Discount: 10%

MASSEY FERGUSON®

(F.O.B. Port of Entry)

TRACTOR FEATURES

POWER TRAIN

- Engine:
  22.5 Gross HP 3 Cyl Diesel 68.5 CID (1.1 L)
  22.0 Net HP @ 2600 RPM
  18.7 PTO HP @ 2600 RPM
- Dry Type Single Air Cleaner
- Transmission: 2 Range Hydrostatic with Cruise Control
- Wet Disk Brakes
- Parking Brake
- Differential Lock
- PTO: 540 RPM Independent PTO
  2000 RPM Mid Independent PTO

HYDRAULIC SYSTEM

- 3-Point Hitch, Cat I With Directional Control,
- Auto Return Lever System
- Engine Driven Gear Pump
- 3-Point Hitch 4.3 GPM (15.5 LPM)
- Power Steering 2.0 GPM (7.5 LPM)
- Total Combined Flow 6.3 GPM (23.1 LPM)

INSTRUMENTS

- Tachometer / Hourmeter
- Engine Coolant Gauge Fuel Gauge
- Warning Lights: Electrical Charging, Oil Pressure and Water Temperature

OTHER STANDARD FEATURES

- Hydrostatic Power Steering
- Hand Accelerator
- Forward And Reverse Foot Pedal
- Electric Fuel Shut-Off
- 12 Volt Electrical System
- Battery: 390 Cold Cranking Amps
- Full Adjustable Seat With Retractable Seat Belt
- 2 Post Fixed Rops
- Tilt-Up Hood
- Turn Signals, Flashers, Tail Lights
- Factory Joystick Optional
- Hydraulic Manifold with Pressure and Return Lines on Model with Factory Joystick

- ***Note: 3-Point Backhoe Installation Voids Warranty***

IMPLEMENT FEATURES

MF DL95 LOADER

- One Piece Main Frame with Tapered Arms and Single Cross Member
- Quick Attach Loader Frame Mount with Pin Lock
- Built-in Parking Stands
- (2) 1.6 inch Double Acting Lift Cylinders
- (2) 1.75 inch Double Acting Bucket Cylinders
- Regenerative Hydraulics for Simultaneous Operation of Lift/Lower and Curl/Dump Functions
- Hydraulic Lines Routed Inside Main Frame for Protection and Visibility
- Galvanized Steel Bushings with Recessed Grease Points
- 48-inch Standard Duty Pin-Type Bucket
- Grille Guard Standard
- Maximum Lift Height: 72.8 Inches
- Lift Capacity to Full Height @ 19.6 inches Forward of Pivot Pin: 580 lbs
- Breakout Force: 920 lbs
- Rated Hydraulic Pressure: 1914 PSI
- Fits all GC1700 Series Tractors

AVAILABLE ATTACHMENTS (REFER TO IMPLEMENT SECTIONS)

- MF 2315, 2320 and 2326 Mid Mounted Mowers
- MF 2360 Front Mounted Snow Blower
- MF 2330 Front Mounted Rotary Broom
- MF 2335 Front Mounted Blade
- MF 2340 Front Mounted Heavy Duty Blade

GC1705 GARDEN COMPACT

Mississippi State Contract Discount: 10%

MASSEY FERGUSON®

Order Code	Catalog Number	Description	Approx. Weight	List Price

ORDER TRACTOR ONLY OR
TRACTOR AND LOADER BELOW
THEN ORDER ONE CODE FROM GROUP 03 THROUGH 04 AS REQUIRED

BASE MACHINE — GROUP 01

MFGC1705		**MFGC1705 Hydrostatic Base Tractor**		
F-RE3	72530380	4wd Platform		9,969.00
F-J-RE3	72530381	4wd Platform with Factory Joystick		10,674.00

LOADER - For 4WD with Joystick Only — GROUP 02

	72533626	MFDL95 Loader Package Includes: Mount, Bucket, Hoses, Grille Guard	486	2,820.00

NOTE: With addition of a Loader, the Model changes to MFGC1705L

*** ALL Tractors will be charged $90 for Assembly**

**** ALL Tractor-Loader Packages will be charged a total $150 for Assembly**
($90 for Tractor and $60 for Loader)

TIRES & WHEELS - Choose only one set of Tires & Wheels — GROUP 03

NOTE: See Dealer / Field Installed Accessories for list of Tires & Wheels available as Loose Accessory orders. Tire and wheel options ordered with the tractor and not subject to availability can be returned via RGA. Contact Dealer Central with questions.

		For Tractor or Tractor-Loader:		
	72530281M	Front: 18x8.50-10 AG Rear: 26x12.00-12 AG	148	653.00
	72530282M	Front: 18x8.50-10 Turf Rear: 26x12.00-12 Turf	140	589.00
	72530283M	Front: 18x8.50-10 Industrial Rear: 26x12.00-12 Industrial		701.00

FRENCH OPERATOR'S MANUAL — GROUP 04

	72530175	French Operator's Manual		No Charge

GC1710 TLB GARDEN COMPACT

Mississippi State Contract Discount: 10%

MASSEY FERGUSON®

(F.O.B. Port of Entry)

TRACTOR FEATURES

POWER TRAIN

- Engine:
  22.5 Gross HP 3 Cyl Diesel 68.5 CID (1.1 L)
  22.0 Net HP @ 2600 RPM
  18.7 PTO HP @ 2600 RPM
- Dry Type Single Air Cleaner
- Transmission: 2 Range Hydrostatic with Cruise Control
- Wet Disk Brakes
- Parking Brake
- Differential Lock
- PTO: 540 RPM Independent PTO
  2000 RPM Mid Independent PTO

HYDRAULIC SYSTEM

- 3-Point Hitch, Cat I With Directional Control,
- Auto Return Lever System
- Engine Driven Gear Pump
- 3-Point Hitch 4.3 GPM (15.5 LPM)
- Power Steering 2.0 GPM (7.5 LPM)
- Total Combined Flow 6.3 GPM (23.1 LPM)

INSTRUMENTS

- Tachometer / Hourmeter
- Engine Coolant Gauge Fuel Gauge
- Warning Lights: Electrical Charging, Oil Pressure and Water Temperature

OTHER STANDARD FEATURES

- Hydrostatic Power Steering
- Hand Accelerator
- Forward And Reverse Foot Pedal
- Electric Fuel Shut-Off
- 12 Volt Electrical System
- Battery: 390 Cold Cranking Amps
- Full Adjustable Seat With Retractable Seat Belt
- 2 Post Folding Rops
- Tilt-Up Hood
- Turn Signals, Flashers, Tail Lights
- Factory Joystick
- Hydraulic Manifold with Pressure and Return Lines on Model with Factory Joystick

- ***Note: 3-Point Backhoe Installation Voids Warranty***

IMPLEMENT FEATURES

MF DL95 LOADER

- One Piece Main Frame with Tapered Arms and Single Cross Member
- Quick Attach Loader Frame Mount with Pin Lock
- Built-in Parking Stands
- (2) 1.6 inch Double Acting Lift Cylinders
- (2) 1.75 inch Double Acting Bucket Cylinders
- Regenerative Hydraulics for Simultaneous Operation of Lift/Lower and Curl/Dump Functions
- Hydraulic Lines Routed Inside Main Frame for Protection and Visibility
- Galvanized Steel Bushings with Recessed Grease Points
- 48-inch Standard Duty Pin-Type Bucket
- Grille Guard Standard
- Maximum Lift Height: 72.8 Inches
- Lift Capacity to Full Height @ 19.6 inches Forward of Pivot Pin: 580 lbs
- Breakout Force: 920 lbs
- Rated Hydraulic Pressure: 1914 PSI
- Fits all GC1700 Series Tractors

MF CB65 BACKHOE

- Digging Depth: 78 inch (2.0 m)
- Max Reach: 107 inch (2.7 m)
- Transport Height: 71 inch (1.8 m)
- Stabilizer Spread - Transport: 47 inch (1.2 m)
- Stabilizer Spread - Operating: 80 inch (2.0 m)
- Loading Height: 66 inch (1.7 m)
- Angle of Departure: 20 Degrees
- Swing Arc: 150 Degrees
- Bucket Rotation: 177 Degrees
- Shipping Weight: 635 lbs (288 kg)
- Digging Force Using Bucket Cylinder: 2476 lb (1123 kg)
- Digging Force Using Dipper Cylinder: 1748 lb (793 kg)
- Single Cylinder Boom Swing

NOTE: Dimensions may change due to tire size

AVAILABLE ATTACHMENTS (REFER TO IMPLEMENT SECTIONS)

- MF 2315, 2320, 2326 Mid Mounted Mowers
- MF 2360 Front Mounted Snow Blower
- MF 2330 Front Mounted Rotary Broom
- MF 2335 Front Mounted Blade
- MF 2340 Front Mounted Heavy Duty Blade

GC1710 TLB GARDEN COMPACT

Mississippi State Contract Discount: 10%

MASSEY FERGUSON®

Order Code	Catalog Number	Description	Approx. Weight	List Price
		ORDER TRACTOR, LOADER AND BACKHOE BELOW THEN ORDER ONE CODE FROM GROUP 02 THROUGH 04 AS REQUIRED		
BASE MACHINE				**GROUP 01**
MFGC1710		**MFGC1710 Hydrostatic Base Tractor Loader Backhoe**		
F-J-LE3	72530382	4WD Platform Tractor with Joystick Includes DL95 Loader and CB65 Backhoe completely assembled		18,713.00
TIRES & WHEELS				**GROUP 02**
NOTE: See Dealer / Field Installed Accessories for list of Tires & Wheels available as Loose Accessory orders. Tire and wheel options ordered with the tractor and not subject to availability can be returned via RGA. Contact Dealer Central with questions.				
	72530281M	Front: 18x8.50-10 AG Rear: 26x12.00-12 AG	148	653.00
	72530282M	Front: 18x8.50-10 Turf Rear: 26x12.00-12 Turf	140	589.00
	72530283M	Front: 18x8.50-10 Industrial Rear: 26x12.00-12 Industrial		701.00
BACKHOE OPTIONS				**GROUP 03**
	72533783ML	10-inch Bucket with 2 Teeth		349.00
	72533784ML	12-inch Bucket with 3 Teeth		400.00
	72533791ML	Stabilizer Street Pads		130.00
	72533792ML	Thumb Kit		440.00
FRENCH OPERATOR'S MANUAL				**GROUP 04**
	72530175	French Operator's Manual		No Charge

GC1715 GARDEN COMPACT

Mississippi State Contract Discount: 10%

MASSEY FERGUSON®

(F.O.B. Port of Entry)

TRACTOR FEATURES

POWER TRAIN

- Engine:
  25.0 Gross HP 3 Cyl Diesel 68.5 CID (1.1 L)
  23.9 Net HP @ 3000 RPM
  19.6 PTO HP @ 3000 RPM
- Dry Type Single Air Cleaner
- Transmission: 2 Range Hydrostatic with Cruise Control
- Wet Disk Brakes
- Parking Brake
- Differential Lock
- PTO: 540 RPM Independent PTO
  2000 RPM Mid Independent PTO

HYDRAULIC SYSTEM

- 3-Point Hitch, Cat I With Directional Control,
- Auto Return Lever System
- Engine Driven Gear Pump
- 3-Point Hitch 4.8 GPM (15.5 LPM)
- Power Steering 2.0 GPM (7.5 LPM)
- Total Combined Flow 6.8 GPM (23.1 LPM)

INSTRUMENTS

- Tachometer / Hourmeter
- Engine Coolant Gauge Fuel Gauge
- Warning Lights: Electrical Charging and Oil Pressure and Water Temperature

OTHER STANDARD FEATURES

- Hydrostatic Power Steering
- Hand Accelerator
- Forward And Reverse Foot Pedal
- Electric Fuel Shut-Off
- 12 Volt Electrical System
- Battery: 390 Cold Cranking Amps
- Full Adjustable Seat With Retractable Seat Belt
- 2 Post Fixed ROPS
- Tilt-Up Hood
- Turn Signals, Flashers, Tail Lights
- Factory Joystick
- Hydraulic Manifold with Pressure and Return Lines on Model with Factory Joystick

- ***Note: 3-Point Backhoe Installation Voids Warranty***

IMPLEMENT FEATURES

MF DL95 LOADER

- One Piece Main Frame with Tapered Arms and Single Cross Member
- Quick Attach Loader Frame Mount with Pin Lock
- Built-in Parking Stands
- (2) 1.6 inch Double Acting Lift Cylinders
- (2) 1.75 inch Double Acting Bucket Cylinders
- Regenerative Hydraulics for Simultaneous Operation of Lift/Lower and Curl/Dump Functions
- Hydraulic Lines Routed Inside Main Frame for Protection and Visibility
- Galvanized Steel Bushings with Recessed Grease Points
- 48-inch Standard Duty Pin-Type Bucket
- Grille Guard Standard
- Maximum Lift Height: 72.8 Inches
- Lift Capacity to Full Height @ 19.6 inches Forward of Pivot Pin: 580 lbs
- Breakout Force: 920 lbs
- Rated Hydraulic Pressure: 1914 PSI
- Fits all GC1700 Series Tractors

AVAILABLE ATTACHMENTS (REFER TO IMPLEMENT SECTIONS)

- MF 2315, 2320 and 2326 Mid Mounted Mowers
- MF 2360 Front Mounted Snow Blower
- MF 2330 Front Mounted Rotary Broom
- MF 2335 Front Mounted Blade
- MF 2340 Front Mounted Heavy Duty Blade

GC1715 GARDEN COMPACT

Mississippi State Contract Discount: 10%

MASSEY FERGUSON®

Order Code	Catalog Number	Description	Approx. Weight	List Price

ORDER TRACTOR ONLY OR
TRACTOR AND LOADER BELOW
THEN ORDER ONE CODE FROM GROUP 03 THROUGH 04 AS REQUIRED

BASE MACHINE — GROUP 01

MFGC1715		**MFGC1715 Hydrostatic Base Tractor**		
F-J-RE3	72530383	4wd Platform with Factory Joystick		12,065.00

LOADER — GROUP 02

	72533626	MFDL95 Loader Package Includes: Mount, Bucket, Hoses, Grille Guard	486	2,820.00

NOTE: With addition of a Loader, the Model changes to MFGC1715L

*** ALL Tractors will be charged $90 for Assembly**

**** ALL Tractor-Loader Packages will be charged a total $150 for Assembly**
($90 for Tractor and $60 for Loader)

TIRES & WHEELS - Choose only one set of Tires & Wheels — GROUP 03

NOTE: See Dealer / Field Installed Accessories for list of Tires & Wheels available as Loose Accessory orders. Tire and wheel options ordered with the tractor and not subject to availability can be returned via RGA. Contact Dealer Central with questions.

		For Tractor or Tractor-Loader:		
	72530281M	Front: 18x8.50-10 AG Rear: 26x12.00-12 AG	148	653.00
	72530282M	Front: 18x8.50-10 Turf Rear: 26x12.00-12 Turf	140	589.00
	72530283M	Front: 18x8.50-10 Industrial Rear: 26x12.00-12 Industrial		701.00

FRENCH OPERATOR'S MANUAL — GROUP 04

	72530175	French Operator's Manual		No Charge

Mississippi State Contract Discount: 10%

GC1720 TLB GARDEN COMPACT

TRACTOR LOADER BACKHOE

MASSEY FERGUSON®

(F.O.B. Port of Entry)

TRACTOR FEATURES

POWER TRAIN

- Engine:
  25.0 Gross HP 3 Cyl Diesel 68.5 CID (1.1 L)
  23.9 Net HP @ 3000 RPM
  19.6 PTO HP @ 3000 RPM
- Dry Type Single Air Cleaner
- Transmission: 2 Range Hydrostatic with Cruise Control
- Wet Disk Brakes
- Parking Brake
- Differential Lock
- PTO: 540 RPM Independent PTO
  2000 RPM Mid Independent PTO

HYDRAULIC SYSTEM

- 3-Point Hitch Rockshaft with Control Valve
  Category I Lower Draft Arms
- Engine Driven Gear Pump
- 3-Point Hitch 4.8 GPM (15.5 LPM)
- Power Steering 2.0 GPM (7.5 LPM)
- Total Combined Flow 6.8 GPM (23.1 LPM)

INSTRUMENTS

- Tachometer / Hourmeter
- Engine Coolant Gauge Fuel Gauge
- Warning Lights: Electrical Charging and Oil Pressure and Water Temperature

OTHER STANDARD FEATURES

- Hydrostatic Power Steering
- Hand Accelerator
- Side by Side Forward and Reverse Pedals
- Electric Fuel Shut-Off
- 12 Volt Electrical System
- Battery: 390 Cold Cranking Amps
- Full Adjustable Seat With Retractable Seat Belt
- 2 Post Folding Rops
- Tilt-Up Hood
- Turn Signals, Flashers, Tail Lights
- Factory Joystick
- Hydraulic Manifold with Pressure and Return Lines on Model with Factory Joystick

- ***Note: 3-Point Backhoe Installation Voids Warranty***

IMPLEMENT FEATURES

MF DL95 LOADER

- One Piece Main Frame with Tapered Arms and Single Cross Member
- Quick Attach Loader Frame Mount with Pin Lock
- Built-in Parking Stands
- (2) 1.6 inch Double Acting Lift Cylinders
- (2) 1.75 inch Double Acting Bucket Cylinders
- Regenerative Hydraulics for Simultaneous Operation of Lift/Lower and Curl/Dump Functions
- Hydraulic Lines Routed Inside Main Frame for Protection and Visibility
- Galvanized Steel Bushings with Recessed Grease Points
- 48-inch Standard Duty Pin-Type Bucket
- Grille Guard Standard
- Maximum Lift Height: 72.8 Inches
- Lift Capacity to Full Height @ 19.6 inches Forward of Pivot Pin: 580 lbs
- Breakout Force: 920 lbs
- Rated Hydraulic Pressure: 1914 PSI
- Fits all GC1700 Series Tractors

MF CB65 BACKHOE

- Digging Depth: 78 inch (2.0 m)
- Max Reach: 107 inch (2.7 m)
- Transport Height: 71 inch (1.8 m)
- Stabilizer Spread - Transport: 47 inch (1.2 m)
- Stabilizer Spread - Operating: 80 inch (2.0 m)
- Loading Height: 66 inch (1.7 m)
- Angle of Departure: 20 Degrees
- Swing Arc: 150 Degrees
- Bucket Rotation: 177 Degrees
- Shipping Weight: 635 lbs (288 kg)
- Digging Force Using Bucket Cylinder: 2476 lb (1123 kg)
- Digging Force Using Dipper Cylinder: 1748 lb (793 kg)
- Single Cylinder Boom Swing

NOTE: Dimensions may change due to tire size

AVAILABLE ATTACHMENTS (REFER TO IMPLEMENT SECTIONS)

- MF 2315, 2320, 2326 Mid Mounted Mowers
- MF 2360 Front Mounted Snow Blower
- MF 2330 Front Mounted Rotary Broom
- MF 2335 Front Mounted Blade
- MF 2340 Front Mounted Heavy Duty Blade

GC1720 TLB GARDEN COMPACT

Mississippi State Contract Discount: 10%

MASSEY FERGUSON®

Order Code	Catalog Number	Description	Approx. Weight	List Price
		ORDER TRACTOR, LOADER AND BACKHOE BELOW THEN ORDER ONE CODE FROM GROUP 02 THROUGH 04 AS REQUIRED		
BASE MACHINE				**GROUP 01**
MFGC1720		**MFGC1720 Hydrostatic Base Tractor Loader Backhoe**		
F-J-LE3	72530384	4WD Platform Tractor with Joystick Includes DL95 Loader and CB65 Backhoe completely assembled		20,633.00
TIRES & WHEELS				**GROUP 02**
NOTE: See Dealer / Field Installed Accessories for list of Tires & Wheels available as Loose Accessory orders. Tire and wheel options ordered with the tractor and not subject to availability can be returned via RGA. Contact Dealer Central with questions.				
	72530281M	Front: 18x8.50-10 AG Rear: 26x12.00-12 AG	148	653.00
	72530282M	Front: 18x8.50-10 Turf Rear: 26x12.00-12 Turf	140	589.00
	72530283M	Front: 18x8.50-10 Industrial Rear: 26x12.00-12 Industrial		701.00
BACKHOE OPTIONS				**GROUP 03**
	72533783ML	10-inch Bucket with 2 Teeth		349.00
	72533784ML	12-inch Bucket with 3 Teeth		400.00
	72533791ML	Stabilizer Street Pads		130.00
	72533792ML	Thumb Kit		440.00
FRENCH OPERATOR'S MANUAL				**GROUP 04**
	72530175	French Operator's Manual		No Charge

MASSEY FERGUSON®

RESERVED

MF 1726E

Mississippi State Contract Discount: 15%

(F.O.B. Port of Entry)

MASSEY FERGUSON®

TRACTOR FEATURES

POWER TRAIN

- Shibaura Engine:
  24.0 Gross HP 3-Cylinder Liquid-Cooled Diesel
  Turbo Charged (91.5 Cu. In.)
  20.4 PTO HP @ 2600 RPM - Gear
  19.2 PTO HP @ 2600 RPM - Hydrostatic
  Emission Standard Category: Tier 4
- Single Stage, Dry Element Type Air Cleaner
- Transmission:
  9F / 3R Speeds Gear Transmission
  Hydrostatic: 3 Non-Synchronized Ranges
- Sealed Wet Disc Brakes
- Pedal Operated Rear Differential Lock
- PTO:
  Rear - 540 RPM Transmission Driven PTO
  with Overrunning Clutch
  Not Mid PTO Capable

HYDRAULIC SYSTEM

- 3-Point Hitch Cat I with Position Control
- Lift Capacity @ Hitch Point: 2205 lbs (1000 kg)
  @ 24 inches: 1600 lbs (725 kg)
- Dual Engine Driven Gear Pump
- Flow at Remotes 6.7 GPM (25.5 LPM)
- Power Steering Pump 3.8 GPM (14.4 LPM)
- Total Combined Flow 10.5 GPM (39.9 LPM)
- Can Support up to 2 Rear Remote Valves
  (Optional, Dealer Installed)

INSTRUMENTS

- Tachometer and Hour Meter
- Temperature and Fuel Gauges
- Warning Lights: High Beam Indicator, Engine Oil Pressure, PTO Engagement, Battery Charge (alt) Indicator, Glow Plug Indicator and Flasher Indicators
- Key Operated Electronic Fuel Shutoff and Glow Plug Control
- Regen Lights

OTHER STANDARD FEATURES

- Steel Tilt-up Hood
- Adjustable Spring Suspension Seat
- 2 Post Folding ROPS and Retractable Seat Belt
- Turn Signals, Flashers, Tail Lights and SMV Emblem
- 2 Headlights

- ***Note: 3-Point Backhoe Installation Voids Warranty***

IMPLEMENT FEATURES

MF L105E LOADER

- One Piece Main Frame with Tapered Arms and Single Cross Member
- Quick Attach Loader Frame Mount with Pin Lock
- Built-in Parking Stands
- (2) 2.0 inch Double Acting Lift Cylinders
- (2) 2.2 inch Double Acting Bucket Cylinders
- Hydraulic Lines Routed Inside Main Frame for Protection and Visibility
- Galvanized Steel Bushings with Recessed Grease Points
- Skid Steer or Pin-Type Implement Attachments
- Grille Guard Standard
- Fits all MF1700E Series Economy Compact Tractor Models with R1 AG, R3 Turf or R4 Industrial Tires
- Maximum Lift Height: 95.7 inches at Pivot
- Lift Capacity to Full Height @ 19.6 inches Forward of Pivot Pin: 830 lbs
- Breakout Force: 1460 lbs
- Rated Hydraulic Pressure: 2132 PSI

MF 1726E

Mississippi State Contract Discount: 15%

MASSEY FERGUSON®

Order Code	Catalog Number	Description	Approx. Weight	List Price

ORDER TRACTOR ONLY OR
TRACTOR AND LOADER BELOW
THEN ORDER ONE CODE FROM GROUP 03 THROUGH 05 AS REQUIRED

BASE MACHINE				**GROUP 01**
MF1726E		**MF1726E Base Tractor**		
F-RE3	72530407	4wd Platform Gear 9x3 Transmission		13,263.00
MF1726EH		**MF1726EH Base Tractor**		
F-H-RE3	72530408	4wd Platform Hydrostatic Transmission		14,608.00

LOADER				**GROUP 02**
	72533739	MFL105E Loader Package Includes: Mounting Kit with Joystick and Grille Guard		3,894.00

NOTE: With addition of a Loader, the Model changes to MF1726EL and MF1726EHL

*** ALL Tractors will be charged $250 for Assembly**
*** ALL Tractor-Loader Packages will be charged $360 for Assembly**

Order Code	Catalog Number	Description	Approx. Weight	List Price
TIRES & WHEELS - Required				**GROUP 03**
		AG Tires Options		
	72530436	Front: 7-16 6PR R1 Rear: 11.2 x 24 4PR R1 Adjustable		1,685.00
		Turf Tires Options		
	72530253	Front: 27 x 8.50-15 4PR Rear: 38 x 14.00-20 4PR		1,558.00
		Industrial Tires Options		
	72530254	Front: 27 x 8.50-15 6PR SS Rear: 15 x 19.5 6PR SS		1,756.00
BUCKET OPTIONS - Required with Loader Packages				**GROUP 04**
	72533678ML	60-inch Skid Steer Type Material Bucket (Requires 72533709M Quick Attach Tool Carrier Kit)		650.00
	72533675ML	60-inch Pin Type Material Bucket		650.00
LOADER ACCESSORIES - The Skid Steer Quick Attach is Required with the Skid Steer Bucket				**GROUP 05**
	72533709ML	Skid Steer Type Bucket Quick Attach Tool Carrier Kit		551.00

MF 1734E

Mississippi State Contract Discount: 15%

MASSEY FERGUSON®

(F.O.B. Port of Entry)

TRACTOR FEATURES

POWER TRAIN

- Shibaura Engine:
  34.0 Gross HP 3-Cylinder Liquid-Cooled Diesel
  Turbo Charged (91.5 Cu. In.)
  29.0 PTO HP @ 2600 RPM - Gear
  27.2 PTO HP @ 2600 RPM - Hydrostatic
  Emission Standard Category: Tier 4
- Single Stage, Dry Element Type Air Cleaner
- Transmission:
  9F / 3R Speeds Gear Transmission
  Hydrostatic: 3 Non-Synchronized Ranges
- Sealed Wet Disc Brakes
- Pedal Operated Rear Differential Lock
- PTO:
  Rear - 540 RPM Transmission Driven PTO
  with Overrunning Clutch
  Not Mid PTO Capable

HYDRAULIC SYSTEM

- 3-Point Hitch Cat I with Position Control
- Lift Capacity @ Hitch Point: 2205 lbs (1000 kg)
  @ 24 inches: 1600 lbs (725 kg)
- Dual Engine Driven Gear Pump
- Flow at Remotes 6.7 GPM (25.5 LPM)
- Power Steering Pump 3.8 GPM (14.4 LPM)
- Total Combined Flow 10.5 GPM (39.9 LPM)
- Can Support up to 2 Rear Remote Valves
  (Optional, Dealer Installed)

INSTRUMENTS

- Tachometer and Hour Meter
- Temperature and Fuel Gauges
- Warning Lights: High Beam Indicator, Engine Oil Pressure, PTO Engagement, Battery Charge (alt) Indicator, Glow Plug Indicator and Flasher Indicators
- Key Operated Electronic Fuel Shutoff and Glow Plug Control
- Regen Lights

OTHER STANDARD FEATURES

- Steel Tilt-up Hood
- Adjustable Spring Suspension Seat
- 2 Post Folding ROPS and Retractable Seat Belt
- Turn Signals, Flashers, Tail Lights and SMV Emblem
- 2 Headlights

- ***Note: 3-Point Backhoe Installation Voids Warranty***

IMPLEMENT FEATURES

MF L105E LOADER

- One Piece Main Frame with Tapered Arms and Single Cross Member
- Quick Attach Loader Frame Mount with Pin Lock
- Built-in Parking Stands
- (2) 2.0 inch Double Acting Lift Cylinders
- (2) 2.2 inch Double Acting Bucket Cylinders
- Hydraulic Lines Routed Inside Main Frame for Protection and Visibility
- Galvanized Steel Bushings with Recessed Grease Points
- Skid Steer or Pin-Type Implement Attachments
- Grille Guard Standard
- Fits all MF1700E Series Economy Compact Tractor Models with R1 AG, R3 Turf or R4 Industrial Tires
- Maximum Lift Height: 95.7 inches at Pivot
- Lift Capacity to Full Height @ 19.6 inches Forward of Pivot Pin: 830 lbs
- Breakout Force: 1460 lbs
- Rated Hydraulic Pressure: 2132 PSI

MF 1734E

Mississippi State Contract Discount: 15%

MASSEY FERGUSON®

Order Code	Catalog Number	Description	Approx. Weight	List Price

ORDER TRACTOR ONLY OR
TRACTOR AND LOADER BELOW
THEN ORDER ONE CODE FROM GROUP 03 THROUGH 05 AS REQUIRED

BASE MACHINE				**GROUP 01**
MF1734E		**MF1734E Base Tractor**		
F-RE3	72530356	4wd Platform Gear 9x3 Transmission		15,617.00
MF1734EH		**MF1734EH Base Tractor**		
F-H-RE3	72530355	4wd Platform Hydrostatic Transmission		16,962.00

LOADER				**GROUP 02**
	72533739	MFL105E Loader Package Includes: Mounting Kit with Joystick and Grille Guard		3,894.00

NOTE: With addition of a Loader, the Model changes to MF1734EL and MF1734EHL

*** ALL Tractors will be charged $250 for Assembly**
*** ALL Tractor-Loader Packages will be charged $360 for Assembly**

MF 1734E

Mississippi State Contract Discount: 15%

MASSEY FERGUSON®

Order Code	Catalog Number	Description	Approx. Weight	List Price
TIRES & WHEELS - Required				**GROUP 03**
		AG Tires Options		
	72530436	Front: 7-16 6PR R1 Rear: 11.2 x 24 4PR R1 Adjustable		1,685.00
		Turf Tires Options		
	72530253	Front: 27 x 8.50-15 4PR Rear: 38 x 14.00-20 4PR		1,558.00
		Industrial Tires Options		
	72530254	Front: 27 x 8.50-15 6PR SS Rear: 15 x 19.5 6PR SS		1,756.00
BUCKET OPTIONS - Required with Loader Packages				**GROUP 04**
	72533678ML	60-inch Skid Steer Type Material Bucket (Requires 72533709M Quick Attach Tool Carrier Kit)		650.00
	72533675ML	60-inch Pin Type Material Bucket		650.00
LOADER ACCESSORIES - The Skid Steer Quick Attach is Required with the Skid Steer Bucket				**GROUP 05**
	72533709ML	Skid Steer Type Bucket Quick Attach Tool Carrier Kit		551.00

MF 1739E

Mississippi State Contract Discount: 15%

(F.O.B. Port of Entry)

MASSEY FERGUSON®

TRACTOR FEATURES

POWER TRAIN

- Shibaura Engine:
  38.5 Gross HP 3-Cylinder Liquid-Cooled Diesel
  Turbo Charged (91.5 Cu. In.)
  32.7 PTO HP @ 2600 RPM - Gear
  30.9 PTO HP @ 2600 RPM - Hydrostatic
  Emission Standard Category: Tier 4
- Single Stage, Dry Element Type Air Cleaner
- Transmission:
  9F / 3R Speeds Gear Transmission
  Hydrostatic: 3 Non-Synchronized Ranges
- Sealed Wet Disc Brakes
- Pedal Operated Rear Differential Lock
- PTO:
  Gear: Rear - 540 RPM Independent PTO
  HST: Rear - 540 RPM Transmission Driven PTO with Overrunning Clutch
  Not Mid PTO Capable

HYDRAULIC SYSTEM

- 3-Point Hitch Cat I with Position Control
- Lift Capacity @ Hitch Point: 2205 lbs (1000 kg) @ 24 inches: 1600 lbs (725 kg)
- Flow at Remotes 7.2 GPM (27.3 LPM)
- Power Steering Pump 4.1 GPM (15.4 LPM)
- Total Combined Flow 11.3 GPM (42.7 LPM)
- Can Support up to 2 Rear Remote Valves (Optional, Dealer Installed)

INSTRUMENTS

- Tachometer and Hour Meter
- Temperature and Fuel Gauges
- Warning Lights: High Beam Indicator, Engine Oil Pressure, PTO Engagement, Battery Charge (alt) Indicator, Glow Plug Indicator and Flasher Indicators
- Key Operated Electronic Fuel Shutoff and Glow Plug Control
- Regen Lights

OTHER STANDARD FEATURES

- Steel Tilt-up Hood
- Adjustable Spring Suspension Seat
- 2 Post Folding ROPS and Retractable Seat Belt
- Turn Signals, Flashers, Tail Lights and SMV Emblem
- 2 Headlights

- ***Note: 3-Point Backhoe Installation Voids Warranty***

IMPLEMENT FEATURES

MF L105E LOADER

- One Piece Main Frame with Tapered Arms and Single Cross Member
- Quick Attach Loader Frame Mount with Pin Lock
- Built-in Parking Stands
- (2) 2.0 inch Double Acting Lift Cylinders
- (2) 2.2 inch Double Acting Bucket Cylinders
- Hydraulic Lines Routed Inside Main Frame for Protection and Visibility
- Galvanized Steel Bushings with Recessed Grease Points
- Skid Steer or Pin-Type Implement Attachments
- Grille Guard Standard
- Fits all MF1700E Series Economy Compact Tractor Models with R1 AG, R3 Turf or R4 Industrial Tires
- Maximum Lift Height: 95.7 inches at Pivot
- Lift Capacity to Full Height @ 19.6 inches Forward of Pivot Pin: 830 lbs
- Breakout Force: 1460 lbs
- Rated Hydraulic Pressure: 2132 PSI

MF 1739E

Mississippi State Contract Discount: 15%

MASSEY FERGUSON®

Order Code	Catalog Number	Description	Approx. Weight	List Price

ORDER TRACTOR ONLY OR
TRACTOR AND LOADER BELOW
THEN ORDER ONE CODE FROM GROUP 03 THROUGH 05 AS REQUIRED

BASE MACHINE				**GROUP 01**
MF1739E		**MF1739E Base Tractor**		
F-G-RE3	72530357	4wd Platform Gear 9x3 Transmission		17,736.00
MF1739EH		**MF1739EH Base Tractor**		
F-H-RE3	72530358	4wd Platform Hydrostatic Transmission		19,081.00

LOADER				**GROUP 02**
	72533739	MFL105E Loader Package Includes: Mounting Kit with Joystick and Grille Guard		3,894.00

NOTE: With addition of a Loader, the Model changes to MF1739EL and MF1739EHL.

*** ALL Tractors will be charged $250 for Assembly**
*** ALL Tractor-Loader Packages will be charged $360 for Assembly**

MF 1739E

Mississippi State Contract Discount: 15%

MASSEY FERGUSON®

Order Code	Catalog Number	Description	Approx. Weight	List Price
TIRES & WHEELS - Required				**GROUP 03**
		AG Tires Options		
	72530436	Front: 7-16 6PR R1 Rear: 11.2 x 24 4PR R1 Adjustable		1,685.00
		Turf Tires Options		
	72530253	Front: 27 x 8.50-15 4PR Rear: 38 x 14.00-20 4PR		1,558.00
		Industrial Tires Options		
	72530254	Front: 27 x 8.50-15 6PR SS Rear: 15 x 19.5 6PR SS		1,756.00
BUCKET OPTIONS - Required with Loader Packages				**GROUP 04**
	72533678ML	60-inch Skid Steer Type Material Bucket (Requires 72533709M Quick Attach Tool Carrier Kit)		650.00
	72533675ML	60-inch Pin Type Material Bucket		650.00
LOADER ACCESSORIES - The Skid Steer Quick Attach is Required with the Skid Steer Bucket				**GROUP 05**
	72533709ML	Skid Steer Type Bucket Quick Attach Tool Carrier Kit		551.00

MASSEY FERGUSON®

RESERVED

MF 1736

Mississippi State Contract Discount: 15%

(F.O.B. Port of Entry)

MASSEY FERGUSON®

TRACTOR FEATURES

POWER TRAIN

- Engine:
  36.2 Rated HP Mitsubishi 3-Cylinder liquid cooled Diesel, 1.7L (101 cu in) Direct Injection, Turbocharged and Intercooled, Electronic Engine Control
  27.5 PTO HP @ 2500 RPM - Shuttle
  26.3 PTO HP @ 2500 RPM - Hydrostatic
  Emission Standard Category: Tier 4
- Dual Element Dry Type Air Cleaner
- Transmission:
  12F/12R Power Shuttle with 4 Synchronized Gears and 3 Ranges.
- Servo-HST Electronic Hydrostatic Transmission with 3 Ranges, Cruise Control, Stall Guard, Max Speed Control and Response Control
- Sealed Wet Disc Brakes
- Pedal Operated Rear Differential Lock
- PTO:
  Rear - 540 RPM Independent Electro Hydraulic
  Mid - Optional 2000 RPM Independent

HYDRAULIC SYSTEM

- 3-Point Hitch Cat I with Position Control Standard, Draft Control Optional
- Lift Capacity @ 24 inches - 2,535 lb (1150 kg)
- Telescopic Stabilizers
- Telescopic Draft Link Ends
- Dual Engine Driven Gear Pump
- Flow at Remotes 11.6 GPM (43.8 LPM)
- Hydrostatic Power Steering
- One Rear Remote Valve Standard on Cab Models, up to 3 Possible. Loader Joystick Standard

INSTRUMENTS

- Combination Digital and Analog Front Dash Display
- Tachometer and Hour Meter
- Temperature and Fuel Gauges
- Warning Lights: High Beam Indicator, Engine Oil Pressure, PTO Engagement, Battery Charge (alt) Indicator, Glow Plug Indicator and Flasher Indicators
- Key Operated Electronic Fuel Shutoff and Glow Plug Control

OTHER STANDARD FEATURES

- ISO Mounted Flat Platform w/ Molded Rubber Floor Mat
- One Piece Tilt-up Hood
- 3 Position Tilt Steering
- Deluxe Adjustable Suspension Seat with Arm Rest
- 2 Post Folding ROPS and Retractable Seat Belt
- Turn Signals, Flashers, Tail Lights and SMV Emblem
- 4 Headlights

CAB FEATURES

- Heating and Air Conditioning
- Wired for Radio and Speakers
- Front and Rear Wiper / Washer
- 2 Front Work Lights
- 2 Rear Work Lights
- Rear and Side opening Windows
- Right and Left Entry Doors
- Right and Left External Mirrors
- Deluxe Digital Display with Ground Speed, Engine Coolant, Temperature, Fuel Level & Diagnostic Readout
- ROPS Certified
- Recirculation Filter

- ***Note: 3-Point Backhoe Installation Voids Warranty***

- ***Note: MF1736L with 4238082 MFDL120 Loader package is <u>Not</u> Compatible with MF1705 Mid Mount Mower; however, it is Compatible with MFDL125 Loader package with Industrial R4 Tire 7496747M Only.***

IMPLEMENT FEATURES

MF DL125 LOADER

- One Piece Main Frame with Tapered Arms and Single Cross Member
- Quick Attach Loader Frame Mount with Pin Lock
- Built-in Parking Stands
- (2) 2.4 inch Double Acting Lift Cylinders
- (2) 2.4 inch Double Acting Bucket Cylinders
- Hydraulic Lines Routed Inside Main Frame for Protection and Visibility
- 3rd Function Capable, Soft-Drive Capable
- Galvanized Steel Bushings with Recessed Grease Points
- Universal Skid Steer Implement Attachment
- Grille Guard Standard
- Fits MF1736 and MF1742 Compact Tractor Models with R1 AG, R3 Turf, or R4 Industrial Tires
- Maximum Lift Height: 102.4 Inches at Pivot
- Lift Capacity to Full Height @ 19.6 inches Forward of Pivot Pin: 1300 lbs
- Breakout Force: 2190 lbs
- Rated Hydraulic Pressure: 2277 PSI

MF 1736

Mississippi State Contract Discount: 15%

MASSEY FERGUSON®

Order Code	Catalog Number	Description	Approx. Weight	List Price
		ORDER TRACTOR ONLY OR TRACTOR AND LOADER BELOW THEN ORDER ONE CODE FROM GROUP 03 THROUGH 04 AS REQUIRED		
BASE MACHINE				**GROUP 01**
MF1736		**MF1736 Power Shuttle Tractor**		
F-P-RE3-J	72530286	4wd Platform Power Shuttle 12x12 Factory Installed Joystick with Mid-Coupler		21,074.00
F-P-V-CYE3-J	72530288	4wd Cab Power Shuttle 12x12 with 1 Rear Remote and Factory Installed Joystick with Mid-Coupler		28,785.00
MF1736H		**MF1736 Hydrostatic Tractor**		
F-H-RE3-J	72530287	4wd Platform HST with Factory Installed Joystick with Mid-Coupler		21,746.00
F-H-V-CYE3-J	72530289	4wd Cab HST with Factory Installed 1 Rear Remote and Factory Installed Joystick with Mid-Coupler		29,458.00
LOADER				**GROUP 02**
	72533740	MFDL125 Loader Package, Skid Steer Attach Includes: Mounting Kit, Grille Guard, and Hose Kit		4,250.00

NOTE: With addition of a Loader, the Model changes to MF1736L and MF1736HL

*** ALL Tractors will be charged $250 for Assembly**

**** ALL Tractor-Loader Packages will be charged $360 for Assembly**

Order Code	Catalog Number	Description	Approx. Weight	List Price

TIRES & WHEELS - Required — GROUP 03

NOTE: See Dealer / Field Installed Accessories for list of Tires & Wheels available as Loose Accessory orders. Tire and wheel options ordered with the tractor and not subject to availability can be returned via RGA. Contact Dealer Central with questions.

	AG Tires Options	
7496701M	Front: 8-16 6 PR R1 HTL Rear: 12.4x24 6 PR R1 HTL Adjustable **(Subject to Availability)**	2,012.00
7140701M	Front: 8-16 6 PR R1 HTL Rear: 13.6x24 6 PR R1 HTL Adjustable	2,112.00
	Turf Tires Options	
7496723M	Front: 27x8.50-15 4 PR MT Rear: 41x14.00-20 4 PR MT **(Subject to Availability)**	1,558.00
	Industrial Tires Options	
7496745M	Front: 10-16.5 6 PR SS TL Rear: 14.9-24 6 PR R4 Adjustable	2,188.00
7498710M	Front: 10-16.5 6 PR Rear: 17.5L-24 6P R4 Adjustable	2,435.00
7496747M	Front: 25x8.5-14 6PR SS Rear: 15x19.5 6PR SS	1,756.00

BUCKET OPTIONS - Required with Loader Packages — GROUP 04

72533679ML	66-inch Skid Steer Bucket	900.00
72533680ML	72-inch Skid Steer Bucket	950.00

MASSEY FERGUSON®

RESERVED

MF 1742

Mississippi State Contract Discount: 15%

(F.O.B. Port of Entry)

MASSEY FERGUSON®

TRACTOR FEATURES

POWER TRAIN

- Engine:
  41.6 Rated HP Mitsubishi 3-Cylinder liquid cooled Diesel, 1.7L (101 cu in) Direct Injection, Turbocharged and Intercooled, Electronic Engine Control
  32.8 PTO HP @ 2500 RPM - Shuttle
  31.6 PTO HP @ 2500 RPM - Hydrostatic
  Emission Standard Category: Tier 4
- Dual Element Dry Type Air Cleaner
- Transmission:
  12F/12R Power Shuttle with 4 Synchronized Gears and 3 Ranges.
- Servo-HST Electronic Hydrostatic Transmission with 3 Ranges, Cruise Control, Stall Guard, Max Speed Control and Response Control
- Sealed Wet Disc Brakes
- Pedal Operated Rear Differential Lock
- PTO:
  Rear - 540 RPM Independent Electro Hydraulic
  Mid - Optional 2000 RPM Independent

HYDRAULIC SYSTEM

- 3-Point Hitch Cat I with Position Control Standard, Draft Control Optional
- Lift Capacity @ 24 inches - 2,535 lb (1150 kg)
- Telescopic Stabilizers
- Telescopic Draft Link Ends
- Dual Engine Driven Gear Pump
- Flow at Remotes 11.6 GPM (43.8 LPM)
- Hydrostatic Power Steering
- One Rear Remote Valve Standard on Cab Models, up to 3 Possible. Loader Joystick Standard

INSTRUMENTS

- Combination Digital and Analog Front Dash Display
- Tachometer and Hour Meter
- Temperature and Fuel Gauges
- Warning Lights: High Beam Indicator, Engine Oil Pressure, PTO Engagement, Battery Charge (alt) Indicator, Glow Plug Indicator and Flasher Indicators
- Key Operated Electronic Fuel Shutoff and Glow Plug Control

OTHER STANDARD FEATURES

- ISO Mounted Flat Platform w/ Molded Rubber Floor Mat
- One Piece Tilt-up Hood
- 3 Position Tilt Steering
- Deluxe Adjustable Suspension Seat with Arm Rest
- 2 Post Folding ROPS and Retractable Seat Belt
- Turn Signals, Flashers, Tail Lights and SMV Emblem
- 4 Headlights

CAB FEATURES

- Heating and Air Conditioning
- Wired for Radio and Speakers
- Front and Rear Wiper / Washer
- 2 Front Work Lights
- 2 Rear Work Lights
- Rear and Side opening Windows
- Right and Left Entry Doors
- Right and Left External Mirrors
- Deluxe Digital Display with Ground Speed, Engine Coolant, Temperature, Fuel Level & Diagnostic Readout
- ROPS Certified
- Recirculation Filter

- ***Note: 3-Point Backhoe Installation Voids Warranty***

IMPLEMENT FEATURES

MF DL125 LOADER

- One Piece Main Frame with Tapered Arms and Single Cross Member
- Quick Attach Loader Frame Mount with Pin Lock
- Built-in Parking Stands
- (2) 2.4 inch Double Acting Lift Cylinders
- (2) 2.4 inch Double Acting Bucket Cylinders
- Hydraulic Lines Routed Inside Main Frame for Protection and Visibility
- 3rd Function Capable, Soft-Drive Capable
- Galvanized Steel Bushings with Recessed Grease Points
- Universal Skid Steer Implement Attachment
- Grille Guard Standard
- Fits MF1736 and MF1742 Compact Tractor Models with R1 AG, R3 Turf, or R4 Industrial Tires
- Maximum Lift Height: 102.4 Inches at Pivot
- Lift Capacity to Full Height @ 19.6 inches Forward of Pivot Pin: 1300 lbs
- Breakout Force: 2190 lbs
- Rated Hydraulic Pressure: 2277 PSI

MF 1742

Mississippi State Contract Discount: 15%

MASSEY FERGUSON®

Order Code	Catalog Number	Description	Approx. Weight	List Price
		ORDER TRACTOR ONLY OR TRACTOR AND LOADER BELOW THEN ORDER ONE CODE FROM GROUP 03 THROUGH 04 AS REQUIRED		
BASE MACHINE				**GROUP 01**
MF1742		**MF1742 Power Shuttle Tractor**		
F-P-RE3-J	72530290	4wd Platform Power Shuttle 12x12 with Factory Installed Joystick with Mid-Coupler		23,950.00
F-P-V-CYE3-J	72530292	4wd Cab Power Shuttle 12x12 with 1 Rear Remote and Factory Installed Joystick with Mid-Coupler		31,661.00
MF1742H		**MF1742 Hydrostatic Tractor**		
F-H-RE3-J	72530291	4wd Platform HST with Factory Installed Joystick with Mid-Coupler		24,622.00
F-H-V-CYE3-J	72530293	4wd Cab HST with Factory Installed 1 Rear Remote and Factory Installed Joystick with Mid-Coupler		32,334.00
LOADER				**GROUP 02**
	72533740	MFDL125 Loader Package, Skid Steer Attach Includes: Mounting Kit, Grille Guard, and Hose Kit		4,250.00

NOTE: With addition of a Loader, the Model changes to MF1742L and MF1742HL

*** ALL Tractors will be charged $250 for Assembly**

**** ALL Tractor-Loader Packages will be charged $360 for Assembly**

MASSEY FERGUSON®

Order Code	Catalog Number	Description	Approx. Weight	List Price

TIRES & WHEELS - Required — GROUP 03

NOTE: See Dealer / Field Installed Accessories for list of Tires & Wheels available as Loose Accessory orders. Tire and wheel options ordered with the tractor and not subject to availability can be returned via RGA. Contact Dealer Central with questions.

		AG Tires Options	
	7496701M	Front: 8-16 6 PR R1 HTL Rear: 12.4x24 6 PR R1 HTL Adjustable **(Subject to Availability)**	2,012.00
	7140701M	Front: 8-16 6 PR R1 HTL Rear: 13.6x24 6 PR R1 HTL Adjustable	2,112.00
		Turf Tires Options	
	7496723M	Front: 27x8.50-15 4 PR MT Rear: 41x14.00-20 4 PR MT **(Subject to Availability)**	1,558.00
		Industrial Tires Options	
	7496745M	Front: 10-16.5 6 PR SS TL Rear: 14.9-24 6 PR R4 Adjustable	2,188.00
	7498710M	Front: 10-16.5 6 PR Rear: 17.5L-24 6P R4 Adjustable	2,435.00
	7496747M	Front: 25x8.5-14 6PR SS Rear: 15x19.5 6PR SS	1,756.00

BUCKET OPTIONS - Required with Loader Packages — GROUP 04

72533679ML	66-inch Skid Steer Bucket	900.00
72533680ML	72-inch Skid Steer Bucket	950.00

MASSEY FERGUSON®

RESERVED

MF 1749

Mississippi State Contract Discount: 15%

(F.O.B. Port of Entry)

MASSEY FERGUSON®

TRACTOR FEATURES

POWER TRAIN

- Engine:
  48.3 Rated HP Mitsubishi 3-Cylinder liquid cooled Diesel, 1.7L (101 cu in) Direct Injection, Turbocharged and Intercooled, Electronic Engine Control
  39 PTO HP @ 2500 RPM - Shuttle
  37.8 PTO HP @ 2500 RPM - Hydrostatic
  Emission Standard Category: Tier 4
- Dual Element Dry Type Air Cleaner
- Transmission:
  12F/12R Power Shuttle with 4 Synchronized Gears and 3 Ranges.
- Servo-HST Electronic Hydrostatic Transmission with 3 Ranges, Cruise Control, Stall Guard, Max Speed Control and Response Control
- Sealed Wet Disc Brakes
- Pedal Operated Rear Differential Lock
- PTO:
  Rear - 540 RPM Independent Electro Hydraulic
  Mid - Optional 2000 RPM Independent

HYDRAULIC SYSTEM

- 3-Point Hitch Cat I with Position Control Standard, Draft Control Optional
- Lift Capacity @ 24 inches - 3,086 lb (1400 kg)
- Telescopic Stabilizers
- Telescopic Draft Link Ends
- Dual Engine Driven Gear Pump
- Flow at Remotes 11.6 GPM (43.8 LPM)
- Hydrostatic Power Steering
- One Rear Remote Valve Standard on Cab Models, up to 3 Possible. Loader Joystick Standard

INSTRUMENTS

- Combination Digital and Analog Front Dash Display
- Tachometer and Hour Meter
- Temperature and Fuel Gauges
- Warning Lights: High Beam Indicator, Engine Oil Pressure, PTO Engagement, Battery Charge (alt) Indicator, Glow Plug Indicator and Flasher Indicators
- Key Operated Electronic Fuel Shutoff and Glow Plug Control

OTHER STANDARD FEATURES

- ISO Mounted Flat Platform w/ Molded Rubber Floor Mat
- One Piece Tilt-up Hood
- 3 Position Tilt Steering
- Deluxe Adjustable Suspension Seat with Arm Rest
- 2 Post Folding ROPS and Retractable Seat Belt
- Turn Signals, Flashers, Tail Lights and SMV Emblem
- 4 Headlights

CAB FEATURES

- Heating and Air Conditioning
- Wired for Radio and Speakers
- Front and Rear Wiper / Washer
- 2 Front Work Lights
- 2 Rear Work Lights
- Rear and Side opening Windows
- Right and Left Entry Doors
- Right and Left External Mirrors
- Deluxe Digital Display with Ground Speed, Engine Coolant, Temperature, Fuel Level & Diagnostic Readout
- ROPS Certified
- Recirculation Filter

- ***Note: 3-Point Backhoe Installation Voids Warranty***

IMPLEMENT FEATURES

MF DL135 LOADER

- One Piece Main Frame with Tapered Arms and Single Cross Member
- Quick Attach Loader Frame Mount with Pin Lock
- Built-in Parking Stands
- (2) 2.75 inch Double Acting Lift Cylinders
- (2) 2.75 inch Double Acting Bucket Cylinders
- Hydraulic Lines Routed Inside Main Frame for Protection and Visibility
- 3rd Function Capable, Soft-Drive Capable
- Galvanized Steel Bushings with Recessed Grease Points
- Universal Skid Steer Implement Attachment
- Grille Guard Standard
- Fits MF1749, 1754, 1758, 1759 Compact Tractor Models with R1 AG, R3 Turf, or R4 Industrial Tires
- Maximum Lift Height: 110.2 Inches at Pivot
- Lift Capacity to Full Height @ 19.6 inches Forward of Pivot Pin: 1760 lbs
- Breakout Force: 2870 lbs
- Rated Hydraulic Pressure: 2277 PSI

MF 1749

Mississippi State Contract Discount: 15%

MASSEY FERGUSON®

Order Code	Catalog Number	Description	Approx. Weight	List Price
		ORDER TRACTOR ONLY OR TRACTOR AND LOADER BELOW THEN ORDER ONE CODE FROM GROUP 03 THROUGH 04 AS REQUIRED		
BASE MACHINE				**GROUP 01**
MF1749		**MF1749 Power Shuttle Tractor**		
F-P-RE3-J	72530294	4wd Platform Power Shuttle 12x12 with Factory Installed Joystick with Mid-Coupler		28,343.00
F-P-V-CYE3-J	72530296	4wd Cab Power Shuttle 12x12 with 1 Rear Remote and Factory Installed Joystick with Mid-Coupler		35,868.00
MF1749H		**MF1749H Hydrostatic Tractor**		
F-H-RE3-J	72530295	4wd Platform HST with Factory Installed Joystick with Mid-Coupler		29,000.00
F-H-V-CYE3-J	72530297	4wd Cab HST with 1 Rear Remote and Factory Installed Joystick with Mid-Coupler		36,525.00
LOADER				**GROUP 02**
	72533742	MFDL135 Loader Package, Skid Steer Attach Includes: Mounting Kit, Grille Guard, and Hose Kit		5,247.00

NOTE: With addition of a Loader, the Model changes to MF1749L and MF1749HL

*** ALL Tractors will be charged $250 for Assembly**

*** ALL Tractor-Loader Packages will be charged $360 for Assembly**

Order Code	Catalog Number	Description	Approx. Weight	List Price

TIRES & WHEELS - Required — GROUP 03

NOTE: See Dealer / Field Installed Accessories for list of Tires & Wheels available as Loose Accessory orders. Tire and wheel options ordered with the tractor and not subject to availability can be returned via RGA. Contact Dealer Central with questions.

		AG Tires Options	
	7498756M	Front: 9.5x16 6PR R1 Rear: 13.6x28 6PR R1 Adjustable	2,340.00
	7498767M	Front: 9.5x16 6PR R1 Rear: 16.9x24 6PR R1 Adjustable	2,371.00
		Turf Tires Options	
	7498778M	Front: 27x10.50-15 4 PR Rear: 44x18.00-20 4 PR	2,422.00
		Industrial Tires Options	
	7498710M	Front: 10-16.5 6 PR Rear: 17.5L-24 6 PR R4 Adjustable	2,435.00
	7496745M	Front: 10-16.5 6 PR SS TL Rear: 14.9-24 6 PR R4 Adjustable	2,188.00

BUCKET OPTIONS - Required with Loader Packages — GROUP 04

	72533680ML	72-inch Skid Steer Bucket	950.00

MASSEY FERGUSON®

RESERVED

MF 1754

Mississippi State Contract Discount: 15%

(F.O.B. Port of Entry)

MASSEY FERGUSON®

FEATURES

POWER TRAIN

- Engine:
  53.6 Rated HP Mitsubishi 4-Cylinder liquid cooled Diesel, 2.2L (135 cu in) Direct Injection, Turbocharged and Intercooled, Electronic Engine Control
  42.1 PTO HP @ 2500 RPM - Shuttle
  40.9 PTO HP @ 2500 RPM - Hydrostatic
  Emission Standard Category: Tier 4
- Dual Element Dry Type Air Cleaner
- Transmission:
  12F/12R Power Shuttle with 4 Synchronized Gears and 3 Ranges.
- Servo-HST Electronic Hydrostatic Transmission with 3 Ranges, Cruise Control, Stall Guard, Max Speed Control and Response Control
- Sealed Wet Disc Brakes
- Pedal Operated Differential Lock
- PTO:
  Rear - 540 RPM Independent Electro Hydraulic
  Mid - Optional 2000 RPM Independent

HYDRAULIC SYSTEM

- 3-Point Hitch Cat I with Position Control Standard, Draft Control Optional
- Lift Capacity @ 24 inches - 3,086 lb (1400 kg)
- Telescopic Stabilizers
- Telescopic Draft Link Ends
- Dual Engine Driven Gear Pump
- Flow at Remotes 11.6 GPM (43.8 LPM)
- Hydrostatic Power Steering
- One Rear Remote Valve Standard on Cab Models, up to 3 Possible. Loader Joystick Standard

INSTRUMENTS

- Combination Digital and Analog Front Dash Display
- Tachometer and Hour Meter
- Temperature and Fuel Gauges
- Warning Lights: High Beam Indicator, Engine Oil Pressure, PTO Engagement, Battery Charge (alt) Indicator, Glow Plug Indicator and Flasher Indicators
- Key Operated Electronic Fuel Shutoff and Glow Plug Control

OTHER STANDARD FEATURES

- ISO Mounted Flat Platform w/ Molded Rubber Floor Mat
- One Piece Tilt-up Hood
- 3 Position Tilt Steering
- Deluxe Adjustable Suspension Seat with Arm Rest
- 2 Post Folding ROPS and Retractable Seat Belt
- Turn Signals, Flashers, Tail Lights and SMV Emblem
- 4 Headlights

CAB FEATURES

- Heating and Air Conditioning
- Wired for Radio and Speakers
- Front and Rear Wiper / Washer
- 2 Front Work Lights
- 2 Rear Work Lights
- Rear and Side opening Windows
- Right and Left Entry Doors
- Right and Left External Mirrors
- Deluxe Digital Display with Ground Speed, Engine Coolant, Temperature, Fuel Level & Diagnostic Readout
- ROPS Certified
- Recirculation Filter

- ***Note: 3-Point Backhoe Installation Voids Warranty***

IMPLEMENT FEATURES

MF DL135 LOADER

- One Piece Main Frame with Tapered Arms and Single Cross Member
- Quick Attach Loader Frame Mount with Pin Lock
- Built-in Parking Stands
- (2) 2.75 inch Double Acting Lift Cylinders
- (2) 2.75 inch Double Acting Bucket Cylinders
- Hydraulic Lines Routed Inside Main Frame for Protection and Visibility
- 3rd Function Capable, Soft-Drive Capable
- Galvanized Steel Bushings with Recessed Grease Points
- Universal Skid Steer Implement Attachment
- Grille Guard Standard
- Fits MF1749, 1754, 1758, 1759 Compact Tractor Models with R1 AG, R3 Turf, or R4 Industrial Tires
- Maximum Lift Height: 110.2 Inches at Pivot
- Lift Capacity to Full Height @ 19.6 inches Forward of Pivot Pin: 1760 lbs
- Breakout Force: 2870 lbs
- Rated Hydraulic Pressure: 2277 PSI

MF 1754

Mississippi State Contract Discount: 15%

MASSEY FERGUSON®

Order Code	Catalog Number	Description	Approx. Weight	List Price
		ORDER TRACTOR ONLY OR TRACTOR AND LOADER BELOW THEN ORDER ONE CODE FROM GROUP 03 THROUGH 04 AS REQUIRED		
BASE MACHINE				**GROUP 01**
MF1754		**MF1754 Power Shuttle Tractor**		
F-P-RE3-J	72530385	4wd Platform Power Shuttle 12x12 with Factory Installed Joystick with Mid-Coupler		29,615.00
F-P-V-CYE3-J	72530387	4wd Cab Power Shuttle 12x12 with 1 Rear Remote and Factory Installed Joystick with Mid-Coupler		37,140.00
MF1754H		**MF1754 Hydrostatic Base Tractor**		
F-H-RE3-J	72530386	4wd Platform HST with Factory Installed Joystick with Mid-Coupler		30,272.00
F-H-V-CYE3-J	72530388	4wd Cab HST with 1 Rear Remote and Factory Installed Joystick with Mid-Coupler		37,796.00
LOADER				**GROUP 02**
	72533744	MFDL135 Loader Package, Skid Steer Attach for Power Shuttle Includes: Mounting Kit, Grille Guard, and Hose Kit		5,247.00
	72533746	MFDL135 Loader Package, Skid Steer Attach, for Hydrostatic Transmission Includes: Mounting Kit, Grille Guard, and Hose Kit		5,247.00

NOTE: With addition of a Loader, the Model changes to MF1754L and MF1754HL

*** ALL Tractors will be charged $250 for Assembly**

*** ALL Tractor-Loader Packages will be charged $360 for Assembly**

Order Code	Catalog Number	Description	Approx. Weight	List Price

TIRES & WHEELS - Required — GROUP 03

NOTE: See Dealer / Field Installed Accessories for list of Tires & Wheels available as Loose Accessory orders. Tire and wheel options ordered with the tractor and not subject to availability can be returned via RGA. Contact Dealer Central with questions.

		AG Tires Options	
	7498756M	Front: 9.5x16 6PR R1 Rear: 13.6x28 6PR R1 Adjustable	2,340.00
	7498767M	Front: 9.5x16 6PR R1 Rear: 16.9x24 6PR R1 Adjustable	2,371.00
		Turf Tires Options	
	7498778M	Front: 27x10.50-15 4 PR Rear: 44x18.00-20 4 PR	2,422.00
		Industrial Tires Options	
	7498710M	Front: 10-16.5 6 PR Rear: 17.5L-24 6 PR R4 Adjustable	2,435.00
	7496745M	Front: 10-16.5 6 PR SS TL Rear: 14.9-24 6 PR R4 Adjustable	2,188.00

BUCKET OPTIONS - Required with Loader Packages — GROUP 04

	72533680ML	72-inch Skid Steer Bucket	950.00

MASSEY FERGUSON®

RESERVED

MF 1758

Mississippi State Contract Discount: 15%

(F.O.B. Port of Entry)

MASSEY FERGUSON®

FEATURES

POWER TRAIN

- Engine:
  59 Rated HP Mitsubishi 4-Cylinder liquid cooled Diesel, 2.2L (135 cu in) Direct Injection, Turbocharged and Intercooled, Electronic Engine Control
  44.4 PTO HP @ 2500 RPM - Hydrostatic
  Emission Standard Category: Tier 4
- Dual Element Dry Type Air Cleaner
- Transmission:
  Servo-HST Electronic Hydrostatic Transmission with 3 Ranges, Cruise Control, Stall Guard, Max Speed Control and Response Control
- Sealed Wet Disc Brakes
- Pedal Operated Differential Lock
- PTO:
  Rear - 540 RPM Independent Electro Hydraulic
  Mid - Optional 2000 RPM Independent

HYDRAULIC SYSTEM

- 3-point Hitch Cat. I/II with Position Control Standard, Draft Control Optional
- Lift Capacity @ 24 inches - 3,086 lb (1400 kg)
- Telescopic Stabilizers
- Telescopic Draft Link Ends
- Dual Engine Driven Gear Pump
- Flow at Remotes 11.6 GPM (43.8 LPM)
- Hydrostatic Power Steering
- One Rear Remote Valve Standard on Cab Models, up to 3 Possible. Loader Joystick Standard

INSTRUMENTS

- Combination Digital and Analog Front Dash Display
- Tachometer and Hour Meter
- Temperature and Fuel Gauges
- Warning Lights: High Beam Indicator, Engine Oil Pressure, PTO Engagement, Battery Charge (alt) Indicator, Glow Plug Indicator and Flasher Indicators
- Key Operated Electronic Fuel Shutoff and Glow Plug Control

OTHER STANDARD FEATURES

- ISO Mounted Flat Platform w/ Molded Rubber Floor Mat
- One Piece Tilt-up Hood
- 3 Position Tilt Steering
- Deluxe Adjustable Suspension Seat with Arm Rest
- 2 Post Folding ROPS and Retractable Seat Belt
- Turn Signals, Flashers, Tail Lights and SMV Emblem
- 4 Headlights

CAB FEATURES

- Heating and Air Conditioning
- Wired for Radio and Speakers
- Front and Rear Wiper / Washer
- 2 Front Work Lights
- 2 Rear Work Lights
- Rear and Side opening Windows
- Right and Left Entry Doors
- Right and Left External Mirrors
- Deluxe Digital Display with Ground Speed, Engine Coolant, Temperature, Fuel Level & Diagnostic Readout
- ROPS Certified
- Recirculation Filter

- ***Note: 3-Point Backhoe Installation Voids Warranty***

IMPLEMENT FEATURES

MF DL135 LOADER

- One Piece Main Frame with Tapered Arms and Single Cross Member
- Quick Attach Loader Frame Mount with Pin Lock
- Built-in Parking Stands
- (2) 2.75 inch Double Acting Lift Cylinders
- (2) 2.75 inch Double Acting Bucket Cylinders
- Hydraulic Lines Routed Inside Main Frame for Protection and Visibility
- 3rd Function Capable, Soft-Drive Capable
- Galvanized Steel Bushings with Recessed Grease Points
- Universal Skid Steer Implement Attachment
- Grille Guard Standard
- Fits MF1749, 1754, 1758, 1759 Compact Tractor Models with R1 AG, R3 Turf, or R4 Industrial Tires
- Maximum Lift Height: 110.2 Inches at Pivot
- Lift Capacity to Full Height @ 19.6 inches Forward of Pivot Pin: 1760 lbs
- Breakout Force: 2870 lbs
- Rated Hydraulic Pressure: 2277 PSI

MF 1758

Mississippi State Contract Discount: 15%

MASSEY FERGUSON®

Order Code	Catalog Number	Description	Approx. Weight	List Price
		ORDER TRACTOR ONLY OR TRACTOR AND LOADER BELOW THEN ORDER ONE CODE FROM GROUP 03 THROUGH 04 AS REQUIRED		
BASE MACHINE				**GROUP 01**
MF1758H		**MF1758 Hydrostatic Tractor**		
F-H-RE3-J	72530389	4wd Platform Servo HST with Factory Installed Joystick with Mid-Coupler		31,893.00
F-H-V-CYE3-J	72530390	4wd Cab HST with Factory Installed 1 Rear Remote Factory Installed Joystick with Mid-Coupler		39,417.00
LOADER				**GROUP 02**
	72533746	MFDL135 Loader Package, Skid Steer Attach, for Hydrostatic Transmission Includes: Mounting Kit, Grille Guard, and Hose Kit		5,247.00

NOTE: With addition of a Loader, the Model changes to MF1758HL

*** ALL Tractors will be charged $250 for Assembly**

*** ALL Tractor-Loader Packages will be charged $360 for Assembly**

Order Code	Catalog Number	Description	Approx. Weight	List Price

TIRES & WHEELS - Required — GROUP 03

NOTE: See Dealer / Field Installed Accessories for list of Tires & Wheels available as Loose Accessory orders. Tire and wheel options ordered with the tractor and not subject to availability can be returned via RGA. Contact Dealer Central with questions.

		AG Tires Options	
	7498756M	Front: 9.5x16 6PR R1 Rear: 13.6x28 6PR R1 Adjustable	2,340.00
	7498767M	Front: 9.5x16 6PR R1 Rear: 16.9x24 6PR R1 Adjustable	2,371.00
		Turf Tires Options	
	7498778M	Front: 27x10.50-15 4 PR Rear: 44x18.00-20 4 PR	2,422.00
		Industrial Tires Options	
	7498710M	Front: 10-16.5 6 PR Rear: 17.5L-24 6 PR R4 Adjustable	2,435.00
	7496745M	Front: 10-16.5 6 PR SS TL Rear: 14.9-24 6 PR R4 Adjustable	2,188.00

BUCKET OPTIONS - Required with Loader Packages — GROUP 04

	72533680ML	72-inch Skid Steer Bucket	950.00

MASSEY FERGUSON®

RESERVED

MF 1759

Mississippi State Contract Discount: 15%

(F.O.B. Port of Entry)

MASSEY FERGUSON®

FEATURES

POWER TRAIN

- Engine
  59 Rated HP Mitsubishi 4-Cylinder liquid cooled Diesel, 2.2L (135 cu in) Direct Injection, Turbocharged and Intercooled, Electronic Engine Control
  45.6 PTO HP @ 2500 RPM - Shuttle
  Emission Standard Category: Tier 4
- Dual Element Dry Type Air Cleaner
- Transmission
  12Fx12R Power Shuttle with 4 Synchronized Gears and 3 Ranges
- Sealed Wet Disc Brakes
- Pedal Operated Differential Lock
- PTO:
  Rear - 540 RPM Independent Electro Hydraulic

HYDRAULIC SYSTEM

- 3-point Hitch Cat. I/II with Position Control Standard, Draft Control Optional
- Lift Capacity @ 24 inches - 3,307 lb (1500 kg)
- Telescopic Stabilizers
- Telescopic Draft Link Ends
- Dual Engine Driven Gear Pumps
- Flow at Remotes 12.8 GPM (48.6 LPM)
- Hydrostatic Power Steering
- One Rear Remote Valve Standard on Cab Models, up to 3 Possible. Loader Joystick Standard

INSTRUMENTS

- Combination Digital and Analog Front Dash Display
- Tachometer and Hour Meter
- Temperature and Fuel Gauges
- Warning Lights: High Beam Indicator, Engine Oil Pressure, PTO Engagement, Battery Charge (alt) Indicator, Glow Plug Indicator and Flasher Indicators
- Key Operated Electronic Fuel Shutoff and Glow Plug Control

OTHER STANDARD FEATURES

- ISO Mounted Flat Platform w/ Molded Rubber Floor Mat
- One Piece Tilt-up Hood
- 3 Position Tilt Steering
- Deluxe Adjustable Suspension Seat with Arm Rest
- 2 Post Folding ROPS and Retractable Seat Belt
- Turn Signals, Flashers, Tail Lights and SMV Emblem
- 4 Headlights

CAB FEATURES

- Heating and Air Conditioning
- Wired for Radio and Speakers
- Front and Rear Wiper / Washer
- 2 Front Work Lights
- 2 Rear Work Lights
- Rear and Side opening Windows
- Right and Left Entry Doors
- Right and Left External Mirrors
- Deluxe Digital Display with Ground Speed, Engine Coolant, Temperature, Fuel Level & Diagnostic Readout
- ROPS Certified
- Recirculation Filter

- ***Note: 3-Point Backhoe Installation Voids Warranty***

IMPLEMENT FEATURES

MF DL135 LOADER

- One Piece Main Frame with Tapered Arms and Single Cross Member
- Quick Attach Loader Frame Mount with Pin Lock
- Built-in Parking Stands
- (2) 2.75 inch Double Acting Lift Cylinders
- (2) 2.75 inch Double Acting Bucket Cylinders
- Hydraulic Lines Routed Inside Main Frame for Protection and Visibility
- 3rd Function Capable, Soft-Drive Capable
- Galvanized Steel Bushings with Recessed Grease Points
- Universal Skid Steer Implement Attachment
- Grille Guard Standard
- Fits MF1749, 1754, 1758, 1759 Compact Tractor Models with R1 AG, R3 Turf, or R4 Industrial Tires
- Maximum Lift Height: 110.2 Inches at Pivot
- Lift Capacity to Full Height @ 19.6 inches Forward of Pivot Pin: 1760 lbs
- Breakout Force: 2870 lbs
- Rated Hydraulic Pressure: 2277 PSI

MF 1759

Mississippi State Contract Discount: 15%

MASSEY FERGUSON®

Order Code	Catalog Number	Description	Approx. Weight	List Price
		ORDER TRACTOR ONLY OR TRACTOR AND LOADER BELOW THEN ORDER ONE CODE FROM GROUP 03 THROUGH 04 AS REQUIRED		
BASE MACHINE				**GROUP 01**
MF1759		**MF1759 Power Shuttle Tractor**		
F-P-RE3-J	72530391	4wd Platform Power Shuttle 12x12 with Factory Installed Joystick with Mid-Coupler		32,190.00
F-P-V-CYE3-J	72530392	4wd Cab Power Shuttle 12x12 with 1 Rear Remote and Factory Installed Joystick with Mid-Coupler		39,716.00
LOADER				**GROUP 02**
	72533748	MFDL135 Loader Package, Skid Steer Attach Includes: Mounting Kit, Grille Guard, and Hose Kit		5,247.00

NOTE: With addition of a Loader, the Model changes to MF1759L

*** ALL Tractors will be charged $250 for Assembly**

*** ALL Tractor-Loader Packages will be charged $360 for Assembly**

Order Code	Catalog Number	Description	Approx. Weight	List Price

TIRES & WHEELS - Required — GROUP 03

NOTE: See Dealer / Field Installed Accessories for list of Tires & Wheels available as Loose Accessory orders. Tire and wheel options ordered with the tractor and not subject to availability can be returned via RGA. Contact Dealer Central with questions.

		AG Tires Option	
	7600720M	Front: 9.5x16 6PR R1 Rear: 16.9x26 6PR R1 (Adjustable)	2,517.00
		Turf Tires Option	
	7498778M	Front: 27x10.50-15 4PR Rear: 44x18.00-20 4 PR	2,422.00
		Industrial Tires Option	
	7600760M	Front: 12-16.5 6 PR R4 Rear: 18.4-24 8 PR R4 (Adjustable)	2,959.00

BUCKET OPTIONS - Required with Loader Packages — GROUP 04

	72533680ML	72-inch Skid Steer Bucket	950.00

MASSEY FERGUSON®

RESERVED

COMPACT TRACTOR

MASSEY FERGUSON®

WHOLEGOODS

DEALER / FIELD INSTALLED ACCESSORIES

Please Order these Items through Dealer Central on a Separate Order from the Tractor Order.

CATALOG NUMBER	DESCRIPTION	GC1705 GC1715	GC1710 GC1720	LIST PRICE
72533705M	Grille Guard without Loader	X		139.00
72533706M	Front Weight Bracket Kit (Requires Grille Guard)	X		115.00
72533785M	16-Inch Bucket with 3 Teeth		X	449.00
4238633M Subject to Availability	Joystick Hydraulic Control Valve Kit for Tractors without Loader Joystick is only for the GC1705 and GC2400 without the Factory Joystick For use with Snowblower, Broom and Blade	X		792.00

CATALOG NUMBER	DESCRIPTION	1726E 1734E 1739E	1736 1742 1749	1754 1758 1759	LIST PRICE
72533707M	Grille Guard without Loader	X			149.00
72533709M	Skidsteer Quick Attach Tool Carrier	X			551.00
72533710M	Grille Guard without Loader		X	X	149.00
72533711M	Front Weight Bracket Kit (Requires Grille Guard)		X	X	125.00
4239020M Subject to Availability	Grille Guard without Loader Can be used as Weight Carrier without Loader (holds 10)	X	X	X	300.00

CATALOG NUMBER	DESCRIPTION	1526	1529	1532	LIST PRICE
7540500M Subject to Availability	Grille Guard without Loader Can be used as Weight Carrier without Loader (holds 8)	X			144.00
4239020M	Grille Guard without Loader Can be used as Weight Carrier without Loader (holds 10)		X	X	300.00
7541502M	Rear Weight Box for Ballast 9 Cu. Ft. Capacity - Approx. 900 lbs	X	X	X	536.00

For the most recent product information, always reference the Sale Engineering Documents on www.OneAGCO.com

COMPACT TRACTOR

MASSEY FERGUSON®

WHOLEGOODS

DEALER / FIELD INSTALLED ACCESSORIES

Please Order these Items through Dealer Central on a Separate Order from the Tractor Order.

CATALOG NUMBER	DESCRIPTION	LIST PRICE
72530281AM	Front: 18 x 8.50-10 / Rear: 26 x 12.00-12 AG	761.00
72530282AM	Front: 18 x 8.5-10 / Rear: 26 x 12.00-12 Turf	687.00
72530283AM	Front: 18 x 8.5-10 / Rear: 26 x 12.00-12 Industrial	819.00
7496712AM	Front: 8-16 (6 Ply) R1 HTL / Rear: 13.6 x 24 (6 Ply) R1 HTL Adjustable AG	2,425.00
7496723AM	Front: 27 x 8.50-15 (4 Ply) / Rear: 41 x 14.00-20 (4 Ply) Turf	1,792.00
7496745AM	Front: 10-16.5 (6 Ply) SS TL / Rear: 14.9-24 R4 Adjustable Industrial	2,516.00
7496747AM	Front: 25 x 8.5-14 (6 Ply) / Rear: 15 x 19.5 (6 Ply) SS Industrial	2,020.00
7498710AM	Front: 10-16.5 (6 Ply) / Rear: 17.5L-24 (6 Ply) R4 Adjustable Industrial	2,801.00
7498778AM	Front: 27 x 10.50-15 (4 Ply) / Rear: 44 x 18.00-20 (4 Ply) Turf	2,785.00
7600760AM	Front: 12-16.5 (6 Ply) R4 / Rear: 18.4-24 (8 Ply) R4 Adjustable Industrial	3,403.00

Model	72530281AM 72530282AM 72530283AM	7496712AM	7496723AM	7496745AM	7496747AM	7498710AM	7498778AM	7600760AM
GC1700	X							
MF1529			X		X			
MF1532			X		X			
MF1533		X	X	X	X			
MF1540		X	X	X	X	X		
MF1635		X	X	X	X	X		
MF1643		X	X	X	X	X		
MF1648				X		X	X	
MF1652				X		X	X	
MF1655				X		X	X	
MF1660							X	X
MF1736			X		X	X	X	
MF1742			X		X		X	
MF1749				X		X	X	
MF1754				X		X	X	
MF1758				X		X	X	
MF1759							X	X

MASSEY FERGUSON®

PARTS SUPPLIED

DEALER / FIELD INSTALLED ACCESSORIES

Consult your AGCO parts ordering system using oneAGCO Solutions-Online to determine current availability and pricing

CATALOG NUMBER	DESCRIPTION	GC1705 GC1715	GC1710 GC1720	LIST PRICE
4330274M91	Block Heater Kit	X	X	Contact AGCO Parts Division

CATALOG NUMBER	DESCRIPTION	1726E 1734E 1739E	1736	1742	1749	1754	1758	1759	FACTORY CODE
7068818M92	1st Rear Remote Valve Kit Includes Valve and Lever Assemblies	X							Contact AGCO Parts Division
7068833M92	2nd Rear Remote Valve Kit Includes Valve and Lever Assemblies	X							Contact AGCO Parts Division
6255415M95	Rear Remote Valve (One Valve Slice) (Standard on Cab)		X	X	X	X	X	X	Contact AGCO Parts Division
6255416M94	1st Lever Kit Requires one of 6255415M95 (Standard on Cab)		X	X	X	X	X		Contact AGCO Parts Division
6255417M94	2nd Lever Kit Requires two of 6255415M95		X	X	X	X	X		Contact AGCO Parts Division
6255418M94	3rd Lever Kit Requires three of 6255415M95 1st and 2nd Lever Kit		X	X	X	X	X		Contact AGCO Parts Division
6256151M94	1st Lever Kit Requires one of 6255415M95 (Standard on Cab)							X	Contact AGCO Parts Division
6256152M94	2nd Lever Kit Requires two of 6255415M95							X	Contact AGCO Parts Division
6256153M94	3rd Lever Kit Requires three of 6255415M95 1st and 2nd Lever Kit							X	Contact AGCO Parts Division

For the most recent product information, always reference the Sale Engineering Documents on www.OneAGCO.com

COMPACT TRACTOR

MASSEY FERGUSON®

PARTS SUPPLIED

DEALER / FIELD INSTALLED ACCESSORIES

Consult your AGCO parts ordering system using oneAGCO Solutions-Online to determine current availability and pricing

CATALOG NUMBER	DESCRIPTION	1726E 1734E 1739E	1736	1742	1749	1754	1758	1759	FACTORY CODE
7069242M91	Mid PTO Kit (25 mm Diameter Shaft)		X						Contact AGCO Parts Division
7069243M91	Mid PTO Kit (35 mm Diameter Shaft)			X	X	X	X		Contact AGCO Parts Division
7067595M91	Draft Control Kit		X	X	X	X	X		Contact AGCO Parts Division
72530329	Category 1 Quick Hitch Note: Implement May Require Adapter Bushings (Not all 3- Point Implements are Compatible with Quick Hitch)		X	X	X	X	X	X	Contact AGCO Parts Division
6241637M91	Power Beyond Plug		X	X	X	X	X	X	Contact AGCO Parts Division
6241534M2	Front Bumper		X	X	X	X	X	X	Contact AGCO Parts Division
4330412M91	Block Heater	X							Contact AGCO Parts Division
4330413M91	Block Heater		X	X	X	X	X	X	Contact AGCO Parts Division
79018831	Rear Wheel Weights 106 lbs each, for R1 and R4 Tires on all Models (excludes 15x19.5 tire option) Weights are Stackable		X	X	X	X	X	X	Contact AGCO Parts Division
79023243	Rear Wheel Weights 80 lbs each, for 41x14.00-20 and 44x18.00-20 Rear R3 Turf Tires. Weights are Stackable		X	X	X	X	X	X	Contact AGCO Parts Division
4283524M2	French Operators Manual	X							Contact AGCO Parts Division
4283525M2	Spanish Operators Manual	X							Contact AGCO Parts Division
4283509M1	French Operators Manual		X	X	X	X	X	X	Contact AGCO Parts Division
4283510M1	Spanish Operators Manual		X	X	X	X	X	X	Contact AGCO Parts Division

For the most recent product information, always reference the Sale Engineering Documents on www.OneAGCO.com

MASSEY FERGUSON®

PARTS SUPPLIED

DEALER / FIELD INSTALLED ACCESSORIES

Consult your AGCO parts ordering system using oneAGCO Solutions-Online to determine current availability and pricing

CATALOG NUMBER	DESCRIPTION	1526	1529	1532	LIST PRICE
4269010A91	Plastic Sunshade (Gray)		X	X	Contact AGCO Parts Division
3605426M92	Engine Coolant Heater Installed in Freeze Plug Hole in Block	X	X	X	Contact AGCO Parts Division
6256596M92	Mid PTO Kit 1529 After S/N JUH24002 1532 After S/N JUH54103		X	X	Contact AGCO Parts Division
6253639M94	Mid PTO Kit 1529 Prior to S/N JUH24002 1532 Prior to S/N JUH54103		X	X	Contact AGCO Parts Division
6253417M97	Single Spool Valve (3/8" Coupler Included in Kit)		X	X	Contact AGCO Parts Division
6253425M95	Second Spool Valve (3/8" Couplers Included in Kit) Requires Single Spool Valve		X	X	Contact AGCO Parts Division
6258119M91	Mid PTO Kit	X			Contact AGCO Parts Division
4330263M93	Single Spool Rear Remote Hydraulic Valve	X			Contact AGCO Parts Division

For the most recent product information, always reference the Sale Engineering Documents on www.OneAGCO.com

MASSEY FERGUSON®

Reserved

MF 1526

Mississippi State Contract Discount: 15%

(F.O.B. Port of Entry)

MASSEY FERGUSON®

FEATURES

POWER TRAIN

- Engine:
  24.8 Gross HP 3 Cyl Diesel
  24.6 Net HP @ 2600 RPM
  20.1 PTO HP @ 2600 RPM - Hydro
  Dry Single Element Air Cleaner
  Emission Standard Category:
  Tier 4i

- Transmission:
  Hydrostatic: with 3 Non-Synchronized Ranges and Cruise Control with Auto-Throttle Control
- Wet Disc Brakes, Parking Brake
- Differential lock: Foot Pedal Operated

- PTO:
  Rear - 540 RPM Independent Electro Hydraulic
  Mid - Optional 2000 RPM Independent

HYDRAULIC SYSTEM:

- 3-Point hitch Cat I with Position and Response Control
- Lift Capacity @ Hitch Point: 1323 lbs
- Dual Engine Driven Gear Pumps
- Flow @ Remotes 5.5 GPM (20.9 LPM)
- Power Steering Pump 3.3 GPM (12.3 LPM)
- Total Combined 10.6 GPM (41.0 LPM)
- Can Support Single Rear Remote Valve (Optional, Field Installed)

INSTRUMENTS:

- Tachometer and hour Meter
- Temperature and Fuel Gauges
- Warning Lights: High Beam indicator, Battery Charge (alt) Indicator and Flasher Indicators
- Key operated electronic Fuel Shutoff and Glow Plug Control

OTHER STANDARD FEATURES:

- Turn Signals, Flashers, Tail Lights SMV Emblem
- Turn Buckle Stabilizers
- Hydrostatic Power Steering
- Foot Accelerator
- Hand Accelerator
- 2 post folding Rops and retractable Seat Belt
- Removable Side Panels
- Side Shift Control Levers
- Adjustable Suspension Seat with Arm Rests
- Tilt Hood

- ***Note: 3-Point Backhoe Installation Voids Warranty***

SUBJECT TO AVAILABILITY

IMPLEMENT FEATURES

MF L90 LOADER

- One Piece Main Frame Arms and Cross Member
- Pedestal Mount Quick Attach with Safety Lock
- 3/16" Tapered Box Section Frame
- 2” Double Acting Lift Cylinders
- 1-1/2” Double Acting Bucket Cylinders
- Plated Steel Hydraulic Lines
- Bucket Level Indicator Standard
- Standard Grille Guard

- Fits MF1526 with AG, Turf, or R4 Tires

- With MF1526
  90.5" Lift Height
  823 lbs. Lift Capacity to Full Height @ Pivot Pin
  594 lbs. Lift Capacity to full height @ 19.5" forward of Pivot Pin

MF 1526

Mississippi State Contract Discount: 15%

MASSEY FERGUSON®

Order Code	Catalog Number	Description	Approx. Weight	List Price
		ORDER TRACTOR ONLY OR TRACTOR AND LOADER BELOW THEN ORDER ONE CODE FROM GROUP 03 THROUGH 05 AS REQUIRED		
BASE MACHINE				**GROUP 01**
MF1526H		**MF1526 Hydrostatic Base Tractor**		
F-H-RE3	72530241	4wd Platform with Hydrostatic Transmission		14,004.00
LOADER				**GROUP 02**
	4238074	MFL90 Loader Package Includes: Mounting Kit and Loader Pedestal Mounted Valve		3,412.00

NOTE: With addition of a Loader, the Model changes to MF1526HL

*** ALL Tractors will be charged $210 for Assembly**

*** ALL Tractor-Loader Packages will be charged a total $320 for Assembly ($210 for Tractor and $110 for Loader)**

TIRES & WHEELS - Required				**GROUP 03**
		Ag Tires Options		
	72530372M	Front: 7-12 4PR Dyna Torq II Rear: 35x12.00-16.5 4PR Tru Power		1,296.00
	72530242M	Front: 7-12 4 PR Tru Power Rear: 9.5-16 6 PR Hi Traction Lug		1,076.00
		Turf Tires Option		
	72530371M	Front: 25x8.50-14 4PR M-T Rear: 36x13.50-15 4PR M-T		1,239.00
		Industrial Tires Option		
	72530370M	Front: 25x8.50-14 6PR SS Rear: 14-17NHS 6PR SS		1,605.00
BUCKET OPTIONS - Required with Loader Packages				**GROUP 04**
	9181710ML	48 Inch Combination Bucket	134	530.00
	5979712ML	54 Inch Combination Bucket	150	614.00
	5979711ML	60 Inch Combination Bucket	157	602.00
LOADER ACCESSORIES - Quick Attach can be Ordered with Bucket				**GROUP 05**
	9181908ML	Bucket Quick Attach Kit with Pin Lock Allows Fast Interchange of Buckets and Other Accessories without the use of Tools	31	261.00

SUBJECT TO AVAILABILITY

MASSEY FERGUSON®

2600 Series
UTILITY

MF2605

(F.O.B. PORT OF ENTRY)

Mississippi State Contract Discount: 10%

TRACTOR FEATURES

ENGINE SYSTEM
- 3 Cylinder Naturally Aspirated Engine Tier III
- 152.6 cu. in. (2.5 l) Displacement
- 38.5 (28.7 kW) SAE Gross Engine Horsepower @ 2000 RPM
- 32 (23.9 kW) PTO Horsepower @ 2000 RPM with live PTO
- 30 (22.4 kW) PTO Horsepower @ 2000 RPM with Independent PTO

FRONT AXLE - Two Factory Options
- 2 wheel drive with Telescopic Adjustment

  OR
- 4 wheel drive with planetary reduction final drives

POWER TRAIN
- Transmission - 8x2 Centershift - Sliding Gear
- Rear Axle - Bevel Gear, Single Reduction Type
- Brakes - Independent Drum Type (Dry) with Mechanical Actuation
- Parking Brake - Mechanical Hand Lever

PTO - Two Factory Options
- Live, 540 RPM, 6 Spline shaft with 12" x 10" Dual Stage Dry Clutch

  OR
- Independent PTO, 540 RPM, 6 Spline Shaft with Electro-hydraulically Engaged Wet-Disc Clutch

*** Manufacturer's Estimate**

HYDRAULICS
- Hydrostatic Steering with Separate Reservoir
- Ferguson 3-Point Hitch System with Top Link Draft Sensing
- 3-Point Hitch Pump Flow (4.2 GPM) *
- Draft, Position and Response Control
- Spool Valves **not** Included
- Internal Auxiliary Piggy-Back pump flow (9.8 GPM) *

THREE POINT LINKAGE
- Fixed-Category I/II Cross Drilled Ball Ends
- Sway Chain Stabilizers

ELECTRICAL
- Headlights
- Single Rear Work Light
- Safety Lights
- 7 Pin ASAE Outlet

OPERATORS ENVIRONMENT
- Straddle Mount
- Retractable Seatbelt
- Folding ROPS
- Suspended Foot Pedals

OTHER STANDARD FEATURES
- Tilting One Piece Hood
- Swinging Drawbar
- Tool Box
- Drawbar Clevis

SUBJECT TO AVAILABILITY

LOADER FEATURES

- One Piece Main Frame with Tapered Arms and Single Cross Member
- Quick Attach Mount with Pin Lock
- Built-in Parking Stands
- (2) 2.4 inch Double Acting Lift Cylinders
- (2) 2.4 inch Double Acting Bucket Cylinders
- Hydraulic Lines Routed Inside Main Frame for Protection and Visibility
- Galvanized Steel Bushings with Recessed Grease Points
- Universal Skid Steer or Euro Hook Type Implement Attachments
- Grille Guard Standard
- Fits all MF2600 Series 4wd Tractors
- Rated on MF2635 Tractor with 9.5-24 Front Tires and 16.9-28 Rear Tires
- Lift Capacity to Full Height @ 31.5 inches Forward of Pivot Pin: 1510 lbs
- Maximum Lift Height: 115 inches at Pivot
- Breakout Force: 2750 lbs
- Rated Hydraulic Pressure: 2755 PSI

MF2605

(F.O.B. PORT OF ENTRY)

Mississippi State Contract Discount: 10%

MASSEY FERGUSON®

Order Code	Catalog Number	Description	List Price

ORDER TRACTOR ONLY OR
TRACTOR AND LOADER BELOW
THEN ORDER ONE CODE FROM GROUP 03 THROUGH 06 AS REQUIRED

MODEL - BASE MACHINE — GROUP 01

MF2605		MF2605 Base Tractor	
BAA	4338201	2wd, 8 x 2 Transmission, Live PTO	$ 14,715.00
BAB	4338202	2wd, 8 x 2 Transmission, Independent PTO	16,053.00
BAE	4338401	4wd, 8 x 2 Transmission, Live PTO	18,728.00
BAF	4338402	4wd, 8 x 2 Transmission, Independent PTO	20,066.00

LOADER - 4WD Only — GROUP 02

	72533751	MF911X Loader Package - Skid Steer Style . . . . . Includes: Mounting Kit, Valve Kit and Grille Guard	6,169.00
	72533752	MF911X Loader Package - Euro Style . . . . . Includes: Mounting Kit, Valve Kit and Grille Guard	5,773.00

NOTE: With addition of a Loader, the Model changes to MF2605L

*** ALL Tractor-Loader Packages will be charged $210 for Assembly**

WHEELS AND TIRES — GROUP 03

		2WD TIRES:	
52	4338604	Front: 7.50 X 16 Pressed Steel Welded. . . . . Rear: 13.6 X 28 R1 Pressed Steel Disc Adjustable Rim	In Base
		4WD TIRES:	
54	4338602	Front: 10.5/80 X 18 R1 Pressed Steel Disc Adjustable Rim Rear: 13.6 X 28 R1 Pressed Steel Disc Adjustable Rim	In Base

HYDRAULIC VALVES - OPTIONAL — GROUP 04

	4345601	1 Rear Spool, Spring Return to Neutral	800.00

GRILLE GUARDS - OPTIONAL - for use without loader — GROUP 05

	72533714ML	Grille Guard, 2605 - 2WD and 2615 - 2WD	225.00
	72533715ML	Grille Guard, 2605 and 2615 - 4WD, ... 2635 - 2WD and 4WD	112.00

SUBJECT TO AVAILABILITY

MF2605

Mississippi State Contract Discount: 10%

Order Code	Catalog Number	Description		List Price
BUCKET OPTIONS - for use with loader packages only				**GROUP 06**
		Skid Steer Style		
	72533683ML	72-inch Skid Steer Material Bucket 185U, 25 cu ft	390	1,100.00
	72533684ML	84-inch Skid Steer Material Bucket 210U, 29 cu ft	437	1,200.00
		Euro Style		
	72533685ML	72-inch Euro Style Material Bucket 185U, 25 cu ft.	390	950.00
	72533686ML	84-inch Euro Style Material Bucket 210U, 29 cu ft.	437	1,050.00

SUBJECT TO AVAILABILITY

MF2615

(F.O.B. PORT OF ENTRY)

Mississippi State Contract Discount: 10%

MASSEY FERGUSON®

TRACTOR FEATURES

ENGINE SYSTEM
- 3 Cylinder Naturally Aspirated Engine Tier IVi
- 164.8 cu. in. (2.7 l) Displacement
- 49 (36.5 kW) SAE Gross Engine Horsepower @ 2250 RPM
- 42 (31.3 kW) PTO Horsepower @ 2250 RPM
- 40 (29.8 kW) PTO Horsepower @ 2250 RPM with Independent PTO

FRONT AXLE - Two Factory Options
- 2 wheel drive with Telescopic Adjustment
  OR
- 4 wheel drive with planetary reduction final drives

POWER TRAIN - Two Factory Options
- Transmission - 8x2 Sideshift - Sliding Gear - Transmission Shift Control Lever on Right Side and Range Box Shift Control Lever on Left Side
- Single Reduction Final Drive
  OR
- Transmission - 8x8 Sideshift - Syncromesh - Transmission Shift Control Lever on Right Side and Range Box Shift Control Lever on Left Side
- Mechanical F-R Shuttle Lever Left Side of Steering Wheel
- Outboard Planetary Final Drives
- Brakes - Internal Multi Wet Disc with Mechanical Actuation
- Parking Brake - Mechanical Hand Lever

PTO - Two Factory Options
- Live, 540 RPM, 6 Spline shaft with 12" x 10" Dual Stage Dry Clutch
  OR
- Independent PTO, 540 RPM, 6 Spline Shaft with Electro-hydraulically Engaged Wet-Disc Clutch

HYDRAULICS
- Hydrostatic Steering with Separate Reservoir
- Ferguson 3-Point Hitch System with Top Link Draft Sensing
- 3-Point Hitch Pump Flow (4.7 GPM) *
- Draft, Position and Response Control
- Spool Valves **not** Included
- Internal Auxiliary Piggy-Back pump flow (11.0 GPM) *

THREE POINT LINKAGE
- Fixed - Category I/II Cross Drilled Ball Ends
- Sway Chain Stabilizers

ELECTRICAL
- Headlights
- Single Rear Work Light
- Safety Lights
- 7 Pin ASAE Outlet

OPERATORS ENVIRONMENT
- Straddle Mount
- Retractable Seatbelt
- Folding ROPS
- Suspended Foot Pedals

OTHER STANDARD FEATURES
- Tilting One Piece Hood
- Swinging Drawbar
- Tool Box
- Drawbar Clevis

***Manufacturer's Estimate**

SUBJECT TO AVAILABILITY

LOADER FEATURES

- One Piece Main Frame with Tapered Arms and Single Cross Member
- Quick Attach Mount with Pin Lock
- Built-in Parking Stands
- (2) 2.4 inch Double Acting Lift Cylinders
- (2) 2.4 inch Double Acting Bucket Cylinders
- Hydraulic Lines Routed Inside Main Frame for Protection and Visibility
- Galvanized Steel Bushings with Recessed Grease Points
- Universal Skid Steer or Euro Hook Type Implement Attachments
- Grille Guard Standard
- Fits all MF2600 Series 4wd Tractors
- Rated on MF2635 Tractor with 9.5-24 Front Tires and 16.9-28 Rear Tires
- Lift Capacity to Full Height @ 31.5 inches Forward of Pivot Pin: 1510 lbs
- Maximum Lift Height: 115 inches at Pivot
- Breakout Force: 2750 lbs
- Rated Hydraulic Pressure: 2755 PSI

MF2615

(F.O.B. PORT OF ENTRY)

Mississippi State Contract Discount: 10%

Order Code	Catalog Number	Description	List Price

ORDER TRACTOR ONLY OR
TRACTOR AND LOADER BELOW
THEN ORDER ONE CODE FROM GROUP 03 THROUGH 06 AS REQUIRED

MODEL - BASE MACHINE — GROUP 01

MF2615		MF2615 Base Tractor	
CAJ	4339209	2wd, 8 x 2 Sideshift Transmission, Live PTO	$ 18,457.00
CAM	4339212	2wd, 8 x 8 Sideshift Transmission, Independent PTO	21,192.00
CAN	4339409	4wd, 8 x 2 Sideshift Transmission, Live PTO	23,786.00
CAR	4339412	4wd, 8 x 8 Sideshift Transmission, Independent PTO	26,757.00

LOADER - 4WD Only — GROUP 02

	72533751	MF911X Loader Package - Skid Steer Style . . . . . Includes: Mounting Kit, Valve Kit and Grille Guard	6,169.00
	72533752	MF911X Loader Package - Euro Style . . . . . Includes: Mounting Kit, Valve Kit and Grille Guard	5,773.00

NOTE: With addition of a Loader, the Model changes to MF2615L

*** ALL Tractor-Loader Packages will be charged $210 for Assembly**

WHEELS AND TIRES — GROUP 03

		2WD 8X2 VERSIONS:	
52	4339603	Front: 7.5 X 16 Pressed Steel Welded . . . . . Rear: 13.6 X 28 R1 Pressed Steel Disc Adjustable Rim	In Base For 8X2
		2WD 8X8 VERSIONS:	
53	4339601	Front: 7.5 X 16 Pressed Steel Welded . . . . . Rear: 14.9 X 28 R1 Pressed Steel Disc Adjustable Rim	In Base For 8X8
99	9361361	Front: 11L15 F3 Pressed Steel Welded. . . . . Rear: 14.9 X 24 R4 Pressed Steel Disc Adjustable Rim	380.00
99	9361360	Front: 11L15 F3 Pressed Steel Welded. . . . . Rear: 16.9 X 24 R4 Pressed Steel Disc Adjustable Rim	496.00
		4WD 8X2 VERSIONS:	
54	4338602	Front: 10.5/80 X 18 R1 Pressed Steel Disc Adjustable Rim Rear: 13.6 X 28 R1 Pressed Steel Disc Adjustable Rim	In Base For 8X2
		4WD 8X8 VERSIONS:	
55	4339602	Front: 9.5 X 24 R1 Pressed Steel Disc Adjustable Rim . . Rear: 14.9 X 28 R1 Pressed Steel Disc Adjustable Rim	In Base For 8X8
99	9361388	Front: 10.5/80 X 18 R4 Pressed Steel Welded . . . . . Rear: 14.9 X 24 R4 Pressed Steel Disc Adjustable Rim	405.00
99	9361389	Front: 12.5/80 X 18 R4 Pressed Steel Welded . . . . . Rear: 16.9 X 24 R4 Pressed Steel Disc Adjustable Rim	521.00

HYDRAULIC VALVES - OPTIONAL — GROUP 04

	4345601	1 Rear Spool, Spring Return to Neutral	800.00

SUBJECT TO AVAILABILITY

MF2615

Mississippi State Contract Discount: 10%

MASSEY FERGUSON®

Order Code	Catalog Number	Description		List Price
GRILLE GUARDS - OPTIONAL - for use without loader				**GROUP 05**
	72533714ML	Grille Guard, 2605 - 2WD and 2615 - 2WD		225.00
	72533715ML	Grille Guard, 2605 and 2615 - 4WD, ... 2635 - 2WD and 4WD		112.00
BUCKET OPTIONS - for use with loader packages only				**GROUP 06**
		Skid Steer Style		
	72533683ML	72-inch Skid Steer Material Bucket 185U, 25 cu ft	390	1,100.00
	72533684ML	84-inch Skid Steer Material Bucket 210U, 29 cu ft	437	1,200.00
		Euro Style		
	72533685ML	72-inch Euro Style Material Bucket 185U, 25 cu ft.	390	950.00
	72533686ML	84-inch Euro Style Material Bucket 210U, 29 cu ft.	437	1,050.00

SUBJECT TO AVAILABILITY

MF2635

(F.O.B. PORT OF ENTRY)

Mississippi State Contract Discount: 10%

TRACTOR FEATURES

ENGINE SYSTEM
- 4 Cylinder Turbo Charged Engine Tier III
- 220 cu. in. (3.6 l) Displacement
- 74 (55.2 kW) SAE Gross Engine Horsepower @ 2200 RPM
- 62 (46.2 kW) PTO Horsepower @ 2200 RPM with Live PTO
- 60 (44.7 kW) PTO Horsepower @ 2200 RPM with Independent PTO

FRONT AXLE - Two Factory Options
- 2 wheel drive with Telescopic Adjustment
  OR
- 4 wheel drive with planetary reduction final drives

POWER TRAIN - Two Factory Options
- Transmission - 8x2 Sideshift - Sliding Gear - Transmission Shift Control Lever on Right Side and Range Box Shift Control Lever on Left Side
- Single Reduction Final Drive
  OR
- Transmission - 8x8 Sideshift - Syncromesh - Transmission Shift Control Lever on Right Side and Range Box Shift Control Lever on Left Side
- Mechanical F-R Shuttle Lever Left Side of Steering Wheel
- Outboard Planetary Final Drives
- Brakes - Internal Multi Wet Disc with Mechanical Actuation
- Parking Brake - Mechanical Hand Lever

PTO - Two Factory Options
- Live, 540 RPM, 6 Spline shaft with 12" x 10" Dual Stage Dry Clutch
  OR
- Independent PTO, 540 RPM, 6 Spline Shaft with Hydraulically Engaged Wet-Disc Clutch

***Manufacturer's Estimate**

HYDRAULICS
- Hydrostatic Steering with Separate Reservoir
- Ferguson 3-Point Hitch System with Top Link Draft Sensing
- 3-Point Hitch Pump Flow (4.7 GPM) *
- Draft, Position and Response Control
- Spool Valves **not** Included
- Internal Auxiliary Piggy-Back pump flow (11.2 GPM) *

THREE POINT LINKAGE
- Fixed - Category I/II Cross Drilled Ball Ends
- Rigid Screw-Type Stabilizers

ELECTRICAL
- Headlights
- Single Rear Work Light
- Safety Lights
- 7 Pin ASAE Outlet

OPERATORS ENVIRONMENT
- Semi-Flat Platform
- Retractable Seatbelt
- Folding ROPS
- Suspended Foot Pedals
- Ground-Level Fuel Tank

OTHER STANDARD FEATURES
- Tilting One Piece Hood
- Swinging Drawbar
- Tool Box
- Drawbar Clevis

LOADER FEATURES

- One Piece Main Frame with Tapered Arms and Single Cross Member
- Quick Attach Mount with Pin Lock
- Built-in Parking Stands
- (2) 2.4 inch Double Acting Lift Cylinders
- (2) 2.4 inch Double Acting Bucket Cylinders
- Hydraulic Lines Routed Inside Main Frame for Protection and Visibility
- Galvanized Steel Bushings with Recessed Grease Points
- Universal Skid Steer or Euro Hook Type Implement Attachments
- Grille Guard Standard
- Fits all MF2600 Series 4wd Tractors
- Rated on MF2635 Tractor with 9.5-24 Front Tires and 16.9-28 Rear Tires
- Lift Capacity to Full Height @ 31.5 inches Forward of Pivot Pin: 1510 lbs
- Maximum Lift Height: 115 inches at Pivot
- Breakout Force: 2750 lbs
- Rated Hydraulic Pressure: 2755 PSI

MF2635

(F.O.B. PORT OF ENTRY)

Mississippi State Contract Discount: 10%

MASSEY FERGUSON®

Order Code	Catalog Number	Description	List Price

ORDER TRACTOR ONLY OR
TRACTOR AND LOADER BELOW
THEN ORDER ONE CODE FROM GROUP 03 THROUGH 06 AS REQUIRED

MODEL - BASE MACHINE — GROUP 01

MF2635		MF2635 Base Tractor	
KAJ	4343609	2wd, 8 x 2 Sideshift Transmission, Live PTO	$ 25,977.00
KAM	4343612	2wd, 8 x 8 Sideshift Transmission, Independent PTO	28,115.00
KAN	4343613	4wd, 8 x 2 Sideshift Transmission, Live PTO	31,971.00
KAR	4343616	4wd, 8 x 8 Sideshift Transmission, Independent PTO	34,509.00

LOADER - 4WD Only — GROUP 02

	72533751	MF911X Loader Package - Skid Steer Style . . . . . Includes: Mounting Kit, Valve Kit and Grille Guard	6,169.00
	72533752	MF911X Loader Package - Euro Style . . . . . Includes: Mounting Kit, Valve Kit and Grille Guard	5,773.00

NOTE: With addition of a Loader, the Model changes to MF2635L

*** ALL Tractor-Loader Packages will be charged $210 for Assembly**

WHEELS AND TIRES — GROUP 03

		2WD VERSIONS:	
56	4340601	Front: 7.5 X 16 Pressed Steel Welded . . . . . Rear: 16.9 X 28 R1 Pressed Steel Disc Adjustable Rim	In Base
99	9361361	Front: 11L15 F3 Pressed Steel Welded. . . . . Rear: 14.9 X 24 R4 Pressed Steel Disc Adjustable Rim	275.00
99	9361360	Front: 11L15 F3 Pressed Steel Welded. . . . . Rear: 16.9 X 24 R4 Pressed Steel Disc Adjustable Rim	391.00
		4WD VERSIONS:	
57	4340602	Front: 9.5 X 24 R1 Pressed Steel Disc Adjustable Rim . . Rear: 16.9 X 28 R1 Pressed Steel Disc Adjustable Rim	In Base
99	9361363	Front: 10.5/80 X 18 R4 Pressed Steel Welded . . . . . Rear: 16.9 X 24 R4 Pressed Steel Disc Adjustable Rim	415.00
99	9361364	Front: 12 X 16.5 R4 Pressed Steel Welded . . . . . Rear: 14.9 X 24 R4 Pressed Steel Disc Adjustable Rim	182.00

HYDRAULIC VALVES - OPTIONAL — GROUP 04

	4345601	1 Rear Spool, Spring Return to Neutral	800.00

MF2635

Mississippi State Contract Discount: 10%

Order Code	Catalog Number	Description		List Price
GRILLE GUARDS - OPTIONAL - for use without loader				**GROUP 05**
	72533715ML	Grille Guard, 2605 and 2615 - 4WD, 2635 - 2WD and 4WD		112.00
BUCKET OPTIONS - for use with loader packages only				**GROUP 06**
		Skid Steer Style		
	72533683ML	72-inch Skid Steer Material Bucket 185U, 25 cu ft	390	1,100.00
	72533684ML	84-inch Skid Steer Material Bucket 210U, 29 cu ft	437	1,200.00
		Euro Style		
	72533685ML	72-inch Euro Style Material Bucket 185U, 25 cu ft.	390	950.00
	72533686ML	84-inch Euro Style Material Bucket 210U, 29 cu ft.	437	1,050.00

FIELD INSTALLED ACCESSORIES

PARTS SUPPLIED

DEALER / FIELD INSTALLED ACCESSORIES

Consult your AGCO parts ordering system using oneAGCO Solutions-Online to determine current availability and pricing.

CATALOG NUMBER	DESCRIPTION	2605	2615	2625	2635	NOTES
ENGINE						
773323M92	Engine Block Heater	X	X	X	X	
8001244P91	Horizontal Exhaust Kit	X				2WD Narrow Step
8001670P91	Horizontal Exhaust Kit	X				4WD Wide Step. Live PTO Only.
8001671P91	Horizontal Exhaust Kit	X				2WD Wide Step
2400178S91	Horizontal Exhaust Kit		X			
8001272P91	Horizontal Exhaust Kit			X		
LINKAGE / DRAWBAR						
8001552P92	Extendable Lower Links	X	X			
8001551P91	Extendable Lower Links			X	X	
180485M1	Category 1 Cross Drawbar	X	X	X	X	
3306432M2	Category 2 Cross Drawbar	X	X	X	X	
HYDRAULICS						
4326082M11	1st Spool Valve (SRN)	X	X	X	X	SRN = Spring Return To Neutral
4326084M91 & 4326096M91	2nd Spool Valve (SRN)	X	X	X	X	Order Both Catalog Numbers to Make a Complete Kit Requires 4326082M11 Spool Valve Installed first
4326084M91 & 4326100M91	2nd Spool Valve (KO & Float)	X	X	X	X	Order Both Catalog Numbers to Make a Complete Kit Requires 4326082M11 Spool Valve Installed first
8001178P91	2nd LH Spool Valve (SRN)	X	X	X	X	For Tractors Previously Equipped with Single LH Spool Valve
4326425M11	Combining Valve Kit	X	X	X	X	Not Compatible with Left Side Valves
8001233P91	Steering Hose Kit	X	X	X	X	Required on 2WD Tractors with 72" Tread Settings
OPERATOR'S AREA						
T0288011	Steel Canopy	X	X	X	X	Requires Adaptor Kit 4326001M11 for 2605, 2615, 2625 Tractors
4326001M11	Canopy Adaptor	X	X	X	X	Required with Steel Canopy T0288011
067973R1	Seat Arm Rest Kit	X	X	X	X	

MASSEY FERGUSON®

FIELD INSTALLED ACCESSORIES

PARTS SUPPLIED

DEALER / FIELD INSTALLED ACCESSORIES

Consult your AGCO parts ordering system using oneAGCO Solutions-Online to determine current availability and pricing.

CATALOG NUMBER	DESCRIPTION	2605	2615	2625	2635	NOTES
WEIGHTS / BALLAST						
8001234P91	Front Weight Bracket 2WD	X	X			
8001235P91	Front Weight Bracket 4WD	X	X			
8003080P91	Front Weight Bracket 2WD& 4WD			X		
3609170M92	Front Suitcase Weight (90lbs)	X	X	X	X	Maximum of 5 Weights on 2605 and 2615 Tractors
4326058M1	**Rear Wheel Weight (100 lbs)** Mounting Hardware Required per Wheel Weight: 4326121M1 Spacer (qty 3) 70925704 Cap Screw (qty 3) 70932665 Nut (qt 3) 70918268 Flat Washer (qty 3)	X	X			8x2 Transmission Only. Single Weight. Does Not Include Hardware. Do Not Exceed the Maximum Allowable Tractor Weight.
4326059M1	**Rear Wheel Weight (100 lbs)** Mounting Hardware Required per Wheel Weight: 70923111 Cap Screw (qty 4) 70932665 Nut (qty 4) 70918268 Flat Washer (qty 4)		X			8x8 Transmission Only. Single Weight. Does Not Include Hardware. Do Not Exceed the Maximum Allowable Tractor Weight.
4326060M1	**Rear Wheel Weight (100 lbs)** Mounting Hardware Required per Wheel Weight: 70934794 Carriage Bolt (qty 4) 70932665 Nut (qty 4) 70918268 Flat Washer (qty 4)			X	X	Single Weight. Does Not Include Hardware. Do Not Exceed the Maximum Allowable Tractor Weight.

MASSEY FERGUSON®

4600 Series

UTILITY

MF4608

Mississippi State Contract Discount: 10%

MASSEY FERGUSON®

(F.O.B. PORT OF ENTRY)

TRACTOR FEATURES

ENGINE SYSTEM
- Engine: AGCO Power 33AWIC 3 Cylinder (Turbocharged)
  Estimated 80 Engine HP (60 kW)
  Estimated 63.5 PTO HP @ 2200 RPM (47.4 kW)
- EPA Tier 4i Compliant
- Air Cleaner: Dual Element Dry Type
- Air Cleaner Intake, Under Hood
- Vertical Exhaust, Side of Hood
- Cooling System: Antifreeze 50/50 Mix

FRONT AXLE
- 2wd: Adjustable
- 4wd: Center Driveline, Open Differential, Mechanical Engagement

POWER TRAIN
- Transmission:
  12 X 12 Power Shuttle with Left Hand Shuttle Lever
  6 Synchronized Gears, 2 Ranges
  Wet Multi-disc Clutch with Left Side Clutch Pedal
- Rear Axle: Inboard Planetary Final Drives, with Foot Operated Mechanical Differential Lock
- Brakes: Independent Oil Immersed Wet Disc Brakes with Independent Foot Pedal Operation
- Hook and Lever Parking Brake
- PTO: Independent 540 and 1000 RPM Speeds, 6 Spline Shaft and 21 Spline (1.375 In. Diameter), Independent Wet Disc Clutch, Electro-hydraulic Engagement

HYDRAULIC SYSTEM
- Steering: Hydrostatic, Adjustable Tilt Steering Column
- Implement System:
  Open Center System, Engine Driven Gear Pump
  17.1 GPM (65 LPM) flow to Remotes
  Optional Integrated Cable-controlled Loader Joystick with Mid Valves
- Rear Linkage:
  ASAE Category II with Telescopic Ball Ends
  Shared Pump with Implements
  Lift Capacity at 24": 3417 LBS (1550 KG)
  Adjustable Lift Rod, Turn Buckle Top Link
  Telescopic Stabilizers
- Swinging Drawbar

ELECTRICAL
- 12 Volt DC, Negative Ground
- Intake Air Pre Heater
- Wet, Maintenance Free 799 CCA Battery
  95 AMP Alternator
- Ignition: Key with Safety Start
- Keyed Engine Shutoff
- Lighting: 4 Headlights, 2 Rear Marker Light Assemblies
- 7 Pin ASAE Outlet Socket

INSTRUMENTS
- Digital and Analog Dash Display
- Analog Engine Tachometer
- Digital Fuel Gauge
- Digital Engine Temperature
- Digital Transmission Display
- Digital Hour Meter
- Operation and Service Lights

OPERATORS ENVIRONMENT (Platform Models)
- Flat Floor Platform
- Folding ROPS
- Seat: Adjustable Spring Cushion Vinyl with Armrests
- Retractable Seat Belt
- Pendant Style (Suspended) Foot Pedals
- Hand and Foot Throttle
- Left Side Foot Step

OPERATORS ENVIRONMENT (Cab Models)
- 6-post Cab With HVAC, Tinted Safety Glass, Front Windshield Wiper/Washer, Front and Rear Roof-mounted Working Lights, 2 Doors, Pre-wired for Audio System
- Right and Left Side View Mirrors
- Seat: Adjustable Spring Cushion with Armrests
- Retractable Seat Belt
- Pendant Style (Suspended) Foot Pedals
- Hand and Foot Throttle
- Left and Right Side Foot Step

OTHER STANDARD FEATURES
- Fuel Tank Under Platform, Ground Fill
  Fuel Capacity: 27.7 gallons (105 Liters)
- One-Piece Tilting Hood
- Tool Box
- SMV Emblem

LOADER FEATURES

MF921X Loader
- One Piece Main Frame with Tapered Arms and Single Cross Member
- Quick Attach Loader Frame Mount with Pin Lock
- Built-in Parking Stands
- (2) 2.6 inch Double Acting Lift Cylinders
- (2) 2.6 inch Double Acting Bucket Cylinders
- Hydraulic Lines Routed Inside Main Frame for Protection and Visibility
- Galvanized Steel Bushings with Recessed Grease Points
- Universal Skid Steer or Euro Hook Type Implement Attachments
- Grille Guard Standard
- Fits MF4608 4wd Tractor Models
- Rated on MF4608 Tractor with 9.5-24 Front Tires and 16.9-30 Rear Tires
- Lift Capacity to Full Height @ 31.5 inches Forward of Pivot Pin: 1920 lbs
- Maximum Lift Height: 124 inches at Pivot
- Breakout Force: 3200 lbs
- Rated Hydraulic Pressure: 2828 PSI

SUBJECT TO AVAILABILITY

MF4608

Mississippi State Contract Discount: 10%

(F.O.B. PORT OF ENTRY)

MASSEY FERGUSON®

Order Code	Catalog Number	Description	List Price

ORDER TRACTOR ONLY OR
TRACTOR AND LOADER BELOW
THEN ORDER ONE CODE FROM GROUP 03 THROUGH 10 AS REQUIRED

BASE MACHINE — GROUP 01

MF4608	72530410	MF4608 Base Tractor	33,174.00

LOADER - 4wd Only — GROUP 02

	72533733	MF921X Loader Package - Skid Steer Style Includes: Mounting Kit, Hose Kit and Grille Guard	5,857.00

NOTE: With addition of a Loader, the Model changes to MF4608L

ALL Tractors will be charged $250 for Assembly

ALL Tractor-Loader Packages will be charged $360 for Assembly

FRONT AXLE — GROUP 03

F	72530274	4wd Front Axle	In Base
T	72530273	2wd Front Axle	(4,115.00)

OPERATOR ENVIRONMENT — GROUP 04

RE3	72530271	Platform	In Base
CYE3	72530272	Cab	9,280.00

TRANSMISSION — GROUP 05

P	72530275	12 X 12 Hydraulic Shuttle	In Base
PL	72530403	12 X 12 Hydraulic Shuttle with Creeper Gear (Available only on 4wd Models with Float/Kickout Hydraulic Valve Option) (Compatible with Dealer Installed Loaders)	1,235.00

JOYSTICK - Mandatory for Tractor Loader Package — GROUP 06

J	72530277	Loader Joystick with Mid Mount Valves (Available on 4wd Models Only) (Not Available with 12 x 12 Hydraulic Shuttle with Creeper Gear)	1,041.00

HYDRAULICS — GROUP 07

2WD Hydraulic Options

V	72530279	1 Spool Valve - Spring Return to Neutral	In Base For 2wd

4WD Hydraulic Options

W	72530278	2 Spool Valves - Spring Return to Neutral	In Base For 4wd
K	72530280	1 Kickout, Float + 1 Float Valve	335.00

SUBJECT TO AVAILABILITY

MF4608

Mississippi State Contract Discount: 10%

(F.O.B. PORT OF ENTRY)

Order Code	Catalog Number	Description	List Price
REAR AND FRONT TIRES			**GROUP 08**
		2WD Tires	
	72530266M	R: 16.9-30 R1 F: 9.5L-15	3,119.00
		4WD Tires	
	72530250M	R: 16.9-30 R1 F: 9.5-24	3,836.00
	72530251M	R: 19.5L-24 R4 F: 10.5/80-18 **(Subject to Availability)**	4,532.00
BUCKET OPTIONS - Required with Loader Packages Only			**GROUP 09**
		Skid Steer Style	
	72533683ML	72-inch Skid Steer Material Bucket 185U, 25 cu ft	1,100.00
	72533684ML	84-inch Skid Steer Material Bucket 210U, 29 cu ft	1,200.00
MISCELLANEOUS OPTIONS			**GROUP 10**
	72533750ML	Light Relocation Kit for MF4600 Series Cab Tractors (Required for all Cabs with Loader)	30.00
	72533731ML	Grille Guard for Tractor without Loader	112.00
	72530394M	Dealer Installed Loader Joystick and Mid Valves for use with MF4600 Series Tractors WITHOUT Factory Joystick and Mid Valves **(Order Separately from Tractor)**	1,313.00

SUBJECT TO AVAILABILITY

MF4609

Mississippi State Contract Discount: 10%

(F.O.B. PORT OF ENTRY)

MASSEY FERGUSON®

TRACTOR FEATURES

ENGINE SYSTEM
- Engine: AGCO Power 33AWIC 3 Cylinder (Turbocharged)
  Estimated 90 Engine HP (67 kW)
  Estimated 72 PTO HP @ 2200 RPM (53.7 kW)
- EPA Tier 4i Compliant
- Air Cleaner: Dual Element Dry Type
- Air Cleaner Intake, Under Hood
- Vertical Exhaust, Side of Hood
- Cooling System: Antifreeze 50/50 Mix

FRONT AXLE
- 2wd: Adjustable
- 4wd: Center Driveline, Open Differential, Mechanical Engagement

POWER TRAIN
- Transmission:
  12 X 12 Power Shuttle with Left Hand Shuttle Lever
  6 Synchronized Gears, 2 Ranges
  Wet Multi-disc Clutch with Left Side Clutch Pedal
- Rear Axle: Inboard Planetary Final Drives, with Foot Operated Mechanical Differential Lock
- Brakes: Independent Oil Immersed Wet Disc Brakes with Independent Foot Pedal Operation
- Hook and Lever Parking Brake
- PTO: Independent 540 and 1000 RPM Speeds, 6 Spline Shaft and 21 Spline (1.375 In. Diameter), Independent Wet Disc Clutch, Electro-hydraulic Engagement

HYDRAULIC SYSTEM
- Steering: Hydrostatic, Adjustable Tilt Steering Column
- Implement System:
  Open Center System, Engine Driven Gear Pump
  17.1 GPM (65 LPM) flow to Remotes
  Optional Integrated Cable-controlled Loader Joystick with Mid Valves
- Rear Linkage:
  ASAE Category II with Telescopic Ball Ends
  Shared Pump with Implements
  Lift Capacity at 24": 3417 LBS (1550 KG)
  Adjustable Lift Rod, Turn Buckle Top Link
  Telescopic Stabilizers
- Swinging Drawbar

ELECTRICAL
- 12 Volt DC, Negative Ground
- Intake Air Pre Heater
- Wet, Maintenance Free 799 CCA Battery
  95 AMP Alternator
- Ignition: Key with Safety Start
- Keyed Engine Shutoff
- Lighting: 4 Headlights, 2 Rear Marker Light Assemblies
- 7 Pin ASAE Outlet Socket

INSTRUMENTS
- Digital and Analog Dash Display
- Analog Engine Tachometer
- Digital Fuel Gauge
- Digital Engine Temperature
- Digital Transmission Display
- Digital Hour Meter
- Operation and Service Lights

OPERATORS ENVIRONMENT (Platform Models)
- Flat Floor Platform
- Folding ROPS
- Seat: Adjustable Spring Cushion Vinyl with Armrests
- Retractable Seat Belt
- Pendant Style (Suspended) Foot Pedals
- Hand and Foot Throttle
- Left Side Foot Step

OPERATORS ENVIRONMENT (Cab Models)
- 6-post Cab With HVAC, Tinted Safety Glass, Front Windshield Wiper/Washer, Front and Rear Roof-mounted Working Lights, 2 Doors, Pre-wired for Audio System
- Right and Left Side View Mirrors
- Seat: Adjustable Spring Cushion with Armrests
- Retractable Seat Belt
- Pendant Style (Suspended) Foot Pedals
- Hand and Foot Throttle
- Left and Right Side Foot Step

OTHER STANDARD FEATURES
- Fuel Tank Under Platform, Ground Fill
  Fuel Capacity: 27.7 gallons (105 Liters)
- One-Piece Tilting Hood
- Tool Box
- SMV Emblem

LOADER FEATURES

MF931X and MF936X Loader
- One Piece Main Frame with Tapered Arms and Single Cross Member
- Quick Attach Loader Frame Mount with Pin Lock
- Built-in Parking Stands
- **NSL:** (2) 2.8 inch Double Acting Lift Cylinders
- **MSL:** (2) 2.6 inch Double Acting Lift Cylinders
- (2) 2.8 inch Double Acting Bucket Cylinders
- Hydraulic Lines Routed Inside Main Frame for Protection and Visibility
- Galvanized Steel Bushings with Recessed Grease Points
- Universal Skid Steer or Euro Hook Type Implement Attachments
- Fits MF4609 and MF4610 2wd and 4wd Tractor Models
- Rated on MF4610 Tractor with 11.2-24 Front Tires and 16.9-30 Rear Tires
- **NSL:** Lift Capacity to Full Height @ 31.5 inches Forward of Pivot Pin: 3020 lbs
- **MSL:** Lift Capacity to Full Height @ 31.5 inches Forward of Pivot Pin: 3430 lbs
- Maximum Lift Height: 136 inches at Pivot
- **NSL:** Breakout Force: 3540 lbs
- **MSL:** Breakout Force: 3660 lbs
- Rated Hydraulic Pressure: 2828 PSI
- Grille Guard Standard

SUBJECT TO AVAILABILITY

MF4609

Mississippi State Contract Discount: 10%

MASSEY FERGUSON®

(F.O.B. PORT OF ENTRY)

Order Code	Catalog Number	Description	List Price

ORDER TRACTOR ONLY OR
TRACTOR AND LOADER BELOW
THEN ORDER ONE CODE FROM GROUP 03 THROUGH 10 AS REQUIRED

BASE MACHINE — GROUP 01

MF4609	72530411	MF4609 Base Tractor	36,532.00

LOADER - 4wd Only — GROUP 02

Non Self-Leveling:

	72533735	MF931X Loader Package - Skid Steer Style Includes: Mounting Kit, Hose Kit and Grille Guard	6,656.00
	72533736	MF931X Loader Package - Euro Style Includes: Mounting Kit, Hose Kit and Grille Guard	6,260.00

Mechanical Self-Leveling

	72533737	MF936X Loader Package - Skid Steer Style Includes: Mounting Kit, Hose Kit and Grille Guard	7,580.00
	72533738	MF936X Loader Package - Euro Style Includes: Mounting Kit, Hose Kit and Grille Guard	7,184.00

NOTE: With addition of a Loader, the Model changes to MF4609L

ALL Tractors will be charged $250 for Assembly

ALL Tractor-Loader Packages will be charged $360 for Assembly

FRONT AXLE — GROUP 03

F	72530274	4wd Front Axle	In Base
T	72530273	2wd Front Axle	(4,115.00)

OPERATOR ENVIRONMENT — GROUP 04

RE3	72530271	Platform	In Base
CYE3	72530272	Cab	9,280.00

TRANSMISSION — GROUP 05

P	72530275	12 X 12 Hydraulic Shuttle	In Base
PL	72530403	12 X 12 Hydraulic Shuttle with Creeper Gear (Available only on 4wd Models with Float/Kickout Hydraulic Valve Option) (Compatible with Dealer Installed Loaders)	1,235.00

JOYSTICK - Mandatory for Tractor Loader Package — GROUP 06

J	72530277	Loader Joystick with Mid Mount Valves (Available on 4wd Models Only) (Not Available w/12 x 12 Hydraulic Shuttle w/Creeper Gear)	1,041.00

HYDRAULICS — GROUP 07

2WD Hydraulic Options

V	72530279	1 Spool Valve - Spring Return to Neutral	In Base For 2wd

4WD Hydraulic Options

W	72530278	2 Spool Valves - Spring Return to Neutral	In Base For 4wd
K	72530280	1 Kickout, Float + 1 Float Valve	335.00

SUBJECT TO AVAILABILITY

MF4609

Mississippi State Contract Discount: 10%

(F.O.B. PORT OF ENTRY)

MASSEY FERGUSON®

Order Code	Catalog Number	Description	List Price
REAR AND FRONT TIRES			**GROUP 08**
	2WD Tires		
	72530262M	R: 16.9-30 R1 F: 9.5L-15	3,119.00
	72530264M	R: 18.4-30 R1 F: 10.00-16	3,770.00
	72530265M	R: 16.9-34 R1 F: 10.00-16	3,667.00
	4WD Tires		
	72530247M	R: 16.9-30 R1 F: 11.2-24	4,161.00
	72530248M	R: 16.9-34 R1 F: 12.4-24	4,612.00
	72530255M	R: 18.4-30 R1 F: 12.4-24	4,492.00
	72530249M	R: 19.5L-24 R4 F: 12.5/80-18 **(Subject to Availability)**	4,635.00
BUCKET OPTIONS - Required with Loader Packages Only			**GROUP 09**
		Skid Steer Style	
	72533683ML	72-inch Skid Steer Material Bucket 185U, 25 cu ft	1,100.00
	72533684ML	84-inch Skid Steer Material Bucket 210U, 29 cu ft	1,200.00
		Euro Style	
	72533685ML	72-inch Euro Style Material Bucket 185U, 25 cu ft	950.00
	72533686ML	84-inch Euro Style Material Bucket 210U, 29 cu ft	1,050.00
MISCELLANEOUS OPTIONS			**GROUP 10**
	72533750ML	Light Relocation Kit for MF4600 Series Cab Tractors (Required for all Cabs with Loader)	30.00
	72533731ML	Grille Guard for Tractor without Loader	112.00
	72530394M	Dealer Installed Loader Joystick and Mid Valves for use with MF4600 Series Tractors WITHOUT Factory Joystick and Mid Valves **(Order Separately from Tractor)**	1,313.00

SUBJECT TO AVAILABILITY

MF4610

Mississippi State Contract Discount: 10%

MASSEY FERGUSON®

(F.O.B. PORT OF ENTRY)

TRACTOR FEATURES

ENGINE SYSTEM
- Engine: AGCO Power 33AWIC 3 Cylinder (Turbocharged)
  Estimated 99 Engine HP (74 kW)
  Estimated 80 PTO HP @ 2200 RPM (59.7 kW)
- EPA Tier 4i Compliant
- Air Cleaner: Dual Element Dry Type
- Air Cleaner Intake, Under Hood
- Vertical Exhaust, Side of Hood
- Cooling System: Antifreeze 50/50 Mix

FRONT AXLE
- 2wd: Adjustable
- 4wd: Center Driveline, Open Differential, Mechanical Engagement

POWER TRAIN
- Transmission:
  12 X 12 Power Shuttle with Left Hand Shuttle Lever
  6 Synchronized Gears, 2 Ranges
  Wet Multi-disc Clutch with Left Side Clutch Pedal
- Rear Axle: Inboard Planetary Final Drives, with Foot Operated Mechanical Differential Lock
- Brakes: Independent Oil Immersed Wet Disc Brakes with Independent Foot Pedal Operation
- Hook and Lever Parking Brake
- PTO: Independent 540 and 1000 RPM Speeds, 6 Spline Shaft and 21 Spline (1.375 In. Diameter), Independent Wet Disc Clutch, Electro-hydraulic Engagement

HYDRAULIC SYSTEM
- Steering: Hydrostatic, Adjustable Tilt Steering Column
- Implement System:
  Open Center System, Engine Driven Gear Pump
  17.1 GPM (65 LPM) flow to Remotes
  Optional Integrated Cable-controlled Loader Joystick with Mid Valves
- Rear Linkage:
  ASAE Category II with Telescopic Ball Ends
  Shared Pump with Implements
  Lift Capacity at 24": 3417 lbs (1550 kg)
  Adjustable Lift Rod, Turn Buckle Top Link
  Telescopic Stabilizers
- Swinging Drawbar

ELECTRICAL
- 12 Volt DC, Negative Ground
- Intake Air Pre Heater
- Wet, Maintenance Free 799 CCA Battery
  95 AMP Alternator
- Ignition: Key with Safety Start
- Keyed Engine Shutoff
- Lighting: 4 Headlights, 2 Rear Marker Light Assemblies
- 7 Pin ASAE Outlet Socket

INSTRUMENTS
- Digital and Analog Dash Display
- Analog Engine Tachometer
- Digital Fuel Gauge
- Digital Engine Temperature
- Digital Transmission Display
- Digital Hour Meter
- Operation and Service Lights

OPERATORS ENVIRONMENT (Platform Models)
- Flat Floor Platform
- Folding ROPS
- Seat: Adjustable Spring Cushion Vinyl with Armrests
- Retractable Seat Belt
- Pendant Style (Suspended) Foot Pedals
- Hand and Foot Throttle
- Left Side Foot Step

OPERATORS ENVIRONMENT (Cab Models)
- 6-post Cab With HVAC, Tinted Safety Glass, Front Windshield Wiper/Washer, Front and Rear Roof-mounted Working Lights, 2 Doors, Pre-wired for Audio System
- Right and Left Side View Mirrors
- Seat: Adjustable Spring Cushion with Armrests
- Retractable Seat Belt
- Pendant Style (Suspended) Foot Pedals
- Hand and Foot Throttle
- Left and Right Side Foot Step

OTHER STANDARD FEATURES
- Fuel Tank Under Platform, Ground Fill
  Fuel Capacity: 27.7 gallons (105 Liters)
- One-Piece Tilting Hood
- Tool Box
- SMV Emblem

LOADER FEATURES

MF931X and MF936X Loader
- One Piece Main Frame with Tapered Arms and Single Cross Member
- Quick Attach Loader Frame Mount with Pin Lock
- Built-in Parking Stands
- **NSL:** (2) 2.8 inch Double Acting Lift Cylinders
- **MSL:** (2) 2.6 inch Double Acting Lift Cylinders
- (2) 2.8 inch Double Acting Bucket Cylinders
- Hydraulic Lines Routed Inside Main Frame for Protection and Visibility
- Galvanized Steel Bushings with Recessed Grease Points
- Universal Skid Steer or Euro Hook Type Implement Attachments
- Fits MF4609 and MF4610 2wd and 4wd Tractor Models
- Rated on MF4610 Tractor with 11.2-24 Front Tires and 16.9-30 Rear Tires
- **NSL:** Lift Capacity to Full Height @ 31.5 inches Forward of Pivot Pin: 3020 lbs
- **MSL:** Lift Capacity to Full Height @ 31.5 inches Forward of Pivot Pin: 3430 lbs
- Maximum Lift Height: 136 inches at Pivot
- **NSL:** Breakout Force: 3540 lbs
- **MSL:** Breakout Force: 3660 lbs
- Rated Hydraulic Pressure: 2828 PSI
- Grille Guard Standard

SUBJECT TO AVAILABILITY

MF4610

Mississippi State Contract Discount: 10%

(F.O.B. PORT OF ENTRY)

MASSEY FERGUSON®

Order Code	Catalog Number	Description	List Price

ORDER TRACTOR ONLY OR
TRACTOR AND LOADER BELOW
THEN ORDER ONE CODE FROM GROUP 03 THROUGH 10 AS REQUIRED

BASE MACHINE — GROUP 01

MF4610	72530412	MF4610 Base Tractor	39,178.00

LOADER - 4wd Only — GROUP 02

Non Self-Leveling

	72533735	MF931X Loader Package - Skid Steer Style Includes: Mounting Kit, Hose Kit and Grille Guard	6,656.00
	72533736	MF931X Loader Package - Euro Style Includes: Mounting Kit, Hose Kit and Grille Guard	6,260.00

Mechanical Self-Leveling

	72533737	MF936X Loader Package - Skid Steer Style Includes: Mounting Kit, Hose Kit and Grille Guard	7,580.00
	72533738	MF936X Loader Package - Euro Style Includes: Mounting Kit, Hose Kit and Grille Guard	7,184.00

NOTE: With addition of a Loader, the Model changes to MF4610L

ALL Tractors will be charged $250 for Assembly

ALL Tractor-Loader Packages will be charged $360 for Assembly

FRONT AXLE — GROUP 03

F	72530274	4wd Front Axle	In Base
T	72530273	2wd Front Axle	(4,115.00)

OPERATOR ENVIRONMENT — GROUP 04

RE3	72530271	Platform	In Base
CYE3	72530272	Cab	9,280.00

TRANSMISSION — GROUP 05

P	72530275	12 X 12 Hydraulic Shuttle	In Base
PL	72530403	12 X 12 Hydraulic Shuttle with Creeper Gear (Available only on 4wd Models with Float/Kickout Hydraulic Valve Option) (Compatible with Dealer Installed Loaders)	1,235.00

JOYSTICK - Mandatory for Tractor Loader Package — GROUP 06

J	72530277	Loader Joystick with Mid Mount Valves (Available on 4wd Models Only) (Not Available w/12 x 12 Hydraulic Shuttle w/Creeper Gear)	1,041.00

HYDRAULICS — GROUP 07

2WD Hydraulic Options

V	72530279	1 Spool Valve - Spring Return to Neutral	In Base For 2wd

4WD Hydraulic Options

W	72530278	2 Spool Valves - Spring Return to Neutral	In Base For 4wd
K	72530280	1 Kickout, Float + 1 Float Valve	335.00

SUBJECT TO AVAILABILITY

MF4610

Mississippi State Contract Discount: 10%

(F.O.B. PORT OF ENTRY)

Orderr Code	Catalog Number	Description	List Price
REAR AND FRONT TIRES			**GROUP 08**
	2WD Tires		
	72530262M	R: 16.9-30 R1 F: 9.5L-15	3,119.00
	72530264M	R: 18.4-30 R1 F: 10.00-16	3,770.00
	72530265M	R: 16.9-34 R1 F: 10.00-16	3,667.00
	4WD Tires		
	72530247M	R: 16.9-30 R1 F: 11.2-24	4,161.00
	72530248M	R: 16.9-34 R1 F: 12.4-24	4,612.00
	72530255M	R: 18.4-30 R1 F: 12.4-24	4,492.00
	72530249M	R: 19.5L-24 R4 F: 12.5/80-18 **(Subject to Availability)**	4,635.00
BUCKET OPTIONS - Required with Loader Packages Only			**GROUP 09**
		Skid Steer Style	
	72533683ML	72-inch Skid Steer Material Bucket 185U, 25 cu ft	1,100.00
	72533684ML	84-inch Skid Steer Material Bucket 210U, 29 cu ft	1,200.00
		Euro Style	
	72533685ML	72-inch Euro Style Material Bucket 185U, 25 cu ft	950.00
	72533686ML	84-inch Euro Style Material Bucket 210U, 29 cu ft	1,050.00
MISCELLANEOUS OPTIONS			**GROUP 10**
	72533750ML	Light Relocation Kit for MF4600 Series Cab Tractors (Required for all Cabs with Loader)	30.00
	72533731ML	Grille Guard for Tractor without Loader	112.00
	72530394M	Dealer Installed Loader Joystick and Mid Valves for use with MF4600 Series Tractors WITHOUT Factory Joystick and Mid Valves **(Order Separately from Tractor)**	1,313.00

SUBJECT TO AVAILABILITY

MF4610LP

Mississippi State Contract Discount: 10%

(F.O.B. PORT OF ENTRY)

MASSEY FERGUSON®

FEATURES

ENGINE SYSTEM
- Engine: AGCO Power 33AWIC 3 Cylinder (Turbocharged)
  Estimated 99 Engine HP (74 kW)
  Estimated 80 PTO HP @ 2200 RPM (59.7 kW)
- EPA Tier 4i Compliant
- Air Cleaner: Dual Element Dry Type
- Air Cleaner Intake, Under Hood
- Horizontal Exhaust
- Cooling System: Antifreeze 50/50 Mix

FRONT AXLE
- 4wd: Center Driveline, Open Differential,
  Mechanical Engagement

POWER TRAIN
- Transmission:
  12 X 12 Power Shuttle with Left Hand Shuttle Lever
  6 Synchronized Gears, 2 Ranges
  Wet Multi-disc Clutch with Left Side Clutch Pedal
- Rear Axle: Inboard Planetary Final Drives, with Foot
  Operated Mechanical Differential Lock
- Brakes: Independent Oil Immersed Wet Disc Brakes with
  Independent Foot Pedal Operation
- Hook and Lever Parking Brake
- PTO: Independent 540 and 1000 RPM Speeds,
  6 Spline Shaft and 21 Spline (1.375 In. Diameter),
  Independent Wet Disc Clutch, Electro-hydraulic
  Engagement

HYDRAULIC SYSTEM
- Steering: Hydrostatic, Adjustable Tilt Steering Column
- Implement System:
  Open Center System, Engine Driven Gear Pump
  17.1 GPM (65 LPM) flow to Remotes
  Optional Integrated Cable-controlled Loader Joystick
  with Mid Valves
- Rear Linkage:
  ASAE Category II with Telescopic Ball Ends
  Shared Pump with Implements
  Lift Capacity at 24": 3417 lbs (1550 kg)
  Adjustable Lift Rod, Turn Buckle Top Link
  Telescopic Stabilizers
- Swinging Drawbar

ELECTRICAL
- 12 Volt DC, Negative Ground
- Intake Air Pre Heater
- Wet, Maintenance Free 799 CCA Battery
  95 AMP Alternator
- Ignition: Key with Safety Start
- Keyed Engine Shutoff
- Lighting: 4 Headlights, 2 Rear Marker Light Assemblies
- 7 Pin ASAE Outlet Socket

INSTRUMENTS
- Digital and Analog Dash Display
- Analog Engine Tachometer
- Digital Fuel Gauge
- Digital Engine Temperature
- Digital Transmission Display
- Digital Hour Meter
- Operation and Service Lights

OPERATORS ENVIRONMENT (Platform Models)
- Flat Floor Platform
- Fully Folding ROPS
- Seat: Adjustable Spring Cushion Vinyl with Armrests
- Retractable Seat Belt
- Pendant Style (Suspended) Foot Pedals
- Hand and Foot Throttle
- Left Side Foot Step

OTHER STANDARD FEATURES
- Heavy Duty Steel Orchard Fenders
- Fuel Tank Under Platform, Ground Fill
  Fuel Capacity: 27.7 gallons (105 Liters)
- SMV Emblem
- One-Piece Tilting Hood

SUBJECT TO AVAILABILITY

MF4610LP

MASSEY FERGUSON®

(F.O.B. PORT OF ENTRY)

Mississippi State Contract Discount: 10%

Order Code	Catalog Number	Description	List Price
		ORDER ONE CODE FROM GROUPS BELOW AS REQUIRED	
BASE MACHINE			**GROUP 01**
MF4610LP	72530413	MF4610 Low Profile Base Tractor	$45,087.00
		ALL Tractors will be charged $250 for Assembly	
FRONT AXLE			**GROUP 02**
F	72530274	4wd Front Axle	In Base
OPERATOR ENVIRONMENT			**GROUP 03**
E3L	72530271	Platform	In Base
TRANSMISSION			**GROUP 04**
P	72530275	12 X 12 Hydraulic Shuttle	In Base
PL	72530403	12 X 12 Hydraulic Shuttle with Creeper Gear (Available only with Float/Kickout Hydraulic Valve Option)	1,235.00
HYDRAULICS			**GROUP 05**
	Hydraulic Options		
W	72530278	2 Spool Valves - Spring Return to Neutral	In Base For 4wd
K	72530280	1 Kickout, Float + 1 Float Valve	335.00
REAR AND FRONT TIRES			**GROUP 06**
	4WD Tires		
	72530396M	R: 16.9-24 F: 12.5/80-18	2,863.00
	72530395M	R: 18.4-26 F: 9.5-24	4,492.00

SUBJECT TO AVAILABILITY

FIELD ACCESSORIES

Please order these accessories through the AGCO Parts Division.
Consult the parts ordering system using oneAGCO Solutions-Online to determine current availability and pricing.

CATALOG NUMBER	DESCRIPTION	4608	4609	4610	4610LP	NOTES
HYDRAULICS						
7066736M93	Auxiliary Remote Valve	X	X	X	X	Spring Return to Neutral (SRN)*
7066737M92	Auxiliary Float Valve	X	X	X	X	Manual return from Float Function
7069070M93	Kickout Float Combo Valve	X	X	X	X	Returns to Neutral at the end of Stroke, One installed per Tractor
7066739M91	Lever Kit	X	X	X	X	Works for all valves. Each Valve requires a Lever Kit.
7066738M91	Couplers for Remote Valve	X	X	X	X	Required for each Valve
7066037M94	Assist Cylinder for Rear 3-Point	X	X	X	X	Increases lift capacity from 3,306 lbs to 4,409 lbs
Refer to Bulletin MF13-04PMB for rear remote valve information						
WEIGHTS & WHEEL EQUIPMENT						
7065137M3	Front Weight Frame	X	X	X	X	
3784628M93	Individual Front Weight 121 lbs (55 kg)	X	X	X	X	Up to 8 Front Weights Maximum
79018834	4 Bolt Rear Wheel Weight	X	X	X		For 34" Wheels Single weight (125 lbs) Maximum of 8 weights can fit on front weight frame
HW45C	Hardware Kit for 1st Weight for Square Hole Wheels	X	X	X		For 34" Wheels/Promo 225
HW45H	Hardware Kit for 1st Weight for Round Hole Wheels	X	X	X		For 34" Wheels/Promo 225
HW45C	Hardware Kit to Add 1 Weight to Base Weight	X	X	X		For 34" Wheels/Promo 225
HW48C2-1	Hardware Kit to Add 2 Weights to Base Weight	X	X	X		For 34" Wheels/Promo 225
79018837	3 Bolt Rear Wheel Weight	X	X	X		For 30" Wheels Single weight (300 lbs)
HW36C	Hardware Kit for 1st Weight for Square Hole Wheels	X	X	X		For 30" Wheels/Promo 225
HW36H	Hardware Kit for 1st Weight for Round Hole Wheels	X	X	X		For 30" Wheels/Promo 225
HW39H	Hardware Kit for Add on Weights	X	X	X		For 30" Wheels/Promo 225

FIELD ACCESSORIES

Please order these accessories through the AGCO Parts Division.
Consult the parts ordering system using oneAGCO Solutions-Online to determine current availability and pricing.

CATALOG NUMBER	DESCRIPTION	4608	4609	4610	4610LP	NOTES
MISCELLANEOUS						
4330450M91	Air Ride Seat Suspension Kit	X	X	X		Cab Tractors Only
7066676M96	Creeper Transmission Kit	X	X	X	X	
V836640935	Block Heater	X	X	X	X	
7066151M91	Clevis Drawbar Set	X	X	X	X	
312013903	Fiberglass Canopy	X	X	X		For Platform Tractors only, attaches to ROPS
7066709M91	High-back Seat (Cabin)	X	X	X		Attached to existing seat, raises seat back height
7066708M91	High-back Seat (Platform)	X	X	X	X	Attached to existing seat, raises seat back height
7066372M91	Radio Antenna	X	X	X		Required when Installing Radio
6255779M91	Speaker	X	X	X		Required when installing audio system, 2 per Tractor
4330410M92	Beacon Light	X	X	X		Cab Tractors Only
7066371M91	Rear Wiper Kit (with Washer Tank)	X	X	X		Cab Tractors Only
4283495M5	French Operators Manual	X	X	X	X	Order from Parts Technical Publications
4283496M5	Spanish Operators Manual	X	X	X	X	

MASSEY FERGUSON®

MF5600 SERIES

5600 SMALL FRAME CLASSIC EDITION

Mississippi State Contract Discount: 20%

(F.O.B. PORT OF ENTRY)

CLASSIC EDITION FEATURES

ENGINE
AGCO Power 3.3L (201 cu. in.) 3 Cylinder, Tier 4i Compliant
- Air-to-Air Aftercooled, Common Rail Injection, Turbocharged

Electronic Engine Management (EEM) with Dual ERPM Settings
Electronic Controlled Viscous Fan Drive
Dual Element Dry Type Air Cleaner
Vertical Exhaust at Right Front Cab Post
Cooling System: Antifreeze to Minus -40C
Fuel Tank Capacity: 42 Gal (160L)

POWERTRAIN
Dyna-4 Transmission
- 16F/16R Semi-Powershift, 4 Ranges with 4 Powershifts Per Range
- T-Handle Control located on Right Hand Console

Multi-Disc Wet Brakes
Power Differential Lock
Independent PTO:
- 540/540E with 6 Spline Shaft (In Base 5609)
- 540/540E/1000 with 6 and 21 Spline Shaft (In Base 5610)

Rear Fender Mounted PTO Shut-Off
Flange Axles

FRONT WHEEL ASSIST AXLE
Power Front Axle (PFA)
- 8 Bolt Pattern

Shielded Center Drive Line with Electro-Hydraulic Control and Front Wheel Drive Differential Lock

HYDRAULICS
Open Center Load Sensing 15 GPM (57 L/min) Pump
2900 PSI (200 Bar) Maximum Pressure
2 Mechanical Valves – Lever Controlled on Right Hand Console
Hydrostatic Power Steering

HITCH
3-Point Hitch: Category 2 Linkage Ball Ends
- Active Transport Control
- Upper Link Sensing
- Electronic Draft Control, Electronic Height Control, and Rate of Drop
- Variable Float Telescopic Stabilizers
- Left and Right Side External 3-Point Control

Drawbar: Category 2, Clevis and Drop Pin

ELECTRICAL SYSTEM
120 Amp Alternator
12V Battery, 600 CCA (SAE)
7 Pin ASAE Rear Trailer Electrical Outlet
Electrical Isolator Switch and Jumpstart Point
110V Engine Block Heater
Ignition with Neutral Start and Key Shutoff

LIGHTING
4 Front Hood Mounted Lights
Four Front Single Bulb Worklights
Four Rear Single Bulb Worklights
Taillights, Flashing Warning Lights and Turn Signals

INSTRUMENTS
Tachometer: Digital and Analog
PTO Speed: Digital
Ground Speed Display: Digital
Fuel Level and Coolant Temp Gauges
Warning/Information Lights

OPERATOR AREA
6 Post Cab
Transmission Control T-Handle on Right Hand Console
Adjustable Steering Column
Front Sun Visor
Air Conditioning and Heater
Mechanical Swivel Seat with Armrest and Seatbelt
Front Windshield Wiper/Washer
Dual Large Telescoping Outside Rear View Mirrors
Single Inside Rear View Mirror
2 Audio Speakers and Antenna
2 Electrical Sockets in Cab

WHEELS AND TIRES
Rear: 420/85R34 R1W 8 Lug Pressed Wheels
Front: 340/85R24 R1W Waffle Wheel

OTHER STANDARD FEATURES
AGCOMMAND Ready with Antenna, Bracket, and Harness (To Complete, See Technology Section of Price Books)
Hi VIS Front Hood, Single Piece Raising with Lockable Front Latch
Lockable Tool Box
SMV Sign
Molded Rear Fenders
English Op Manual

SUBJECT TO AVAILABILITY

5600 SMALL FRAME CLASSIC EDITION

Mississippi State Contract Discount: 20%

MASSEY FERGUSON®

(F.O.B. PORT OF ENTRY)

Order Code	Catalog Number	Description	Approx. Weight (lb.)	List Price

ONE *ORDER CODE* FROM EACH GROUP MUST BE SPECIFIED. (Unless In Base Option is desired)

BASE MACHINE

DYNA-4 EDITIONS

MF5609~D4~ES	7292171	Massey 5609 Classic Tractor 70 PTO HP.		74,201.00
MF5610~D4~ES	7292172	Massey 5610 Classic Tractor 75 PTO HP.		77,041.00

TRANSMISSION OPTION

25-EA635	Base	Dyna-4 Transmission with 16F/16R gears 25 MPH . . . (40 KPH) with Speed Matching		**In Base**
25-EA637	7292175	Dyna-4 Transmission with 16F/16R gears 25 MPH . . . (40 KPH) with AUTO-DRIVE		266.00

EQUIPMENT REQUIRED FOR NORTH AMERICA

	7293488	Instructional Seat		472.00
	7292141	Front Weight Carrier . . . . . (Removed when factory installed front 3-Point Hitch is selected.)		**In Base**

MARKETING PACKAGE

	MKT0323	Upgrade Package Includes: . . . . . 26 GPM (98 L/min) Twin Flow Open Center System Radio (MP3 Compatible), Aerial & Speakers Dyna-4 Transmission w/ 16F/16R gears 25 MPH (40 KPH) w/ AUTO-DRIVE Air Suspended Seat - Manual Adjustment		2,741.00
	MKT0324	Upgrade Package Includes: . . . . . Visio Roof Dyna-4 Transmission w/ 16F/16R gears 25 MPH (40 KPH) w/ AUTO-DRIVE 26 GPM (98 L/min) Twin Flow Open Center System		2,778.00

SUBJECT TO AVAILABILITY

5600 SMALL FRAME CLASSIC EDITION

Mississippi State Contract Discount: 20%

(F.O.B. PORT OF ENTRY)

Order Code	Catalog Number	Description	Approx. Weight (lb.)	List Price
AUXILIARY HYDRAULIC FLOW				
370-DP057	Base	15 GPM (57 L/min) Open Center System		**In Base**
370-DP100	7292178	26 GPM (98 L/min) Twin Flow Open Center System . .		988.00
AUXILIARY VALVE 1 & 2				
50-KX004	Base	2 Mechanical Controlled Valves, ... Located on right hand console (1st - Single Acting/Double Acting, Flow Dividing and 2nd- Single Acting/Double Acting, Zero Leak, Notch Float) (Requires DP057) (Requires MU000)		**In Base**
50-KX005	7292192	2 Mechanical Controlled Valves, ... Located on right hand console (1st - Single Acting/Double Acting, Flow Dividing, Kickout and 2nd - Double Acting, Kickout, Float) (Requires DP100) (Requires MU000)		No Charge
50-KX006	7292193	2 Mechanical Controlled Valves, ... Located on right hand console (1st - Double Acting, Flow Dividing, Kickout, Zero Leak and 2nd - Single Acting/Double Acting, Zero Leak, Notch Float) (Requires DP057 or DP100) (Requires MU002 or MU011)		No Charge
AUXILIARY VALVE 3 & 4				
55-MU000	Base	Less Additional Valve . . . . . (Requires DP057 or DP100) (Requires KX004 or KX005)		**In Base**
55-MU002	7292194	3rd Mechanical Valve Only, ... Located on right hand console (Single Acting/Double Acting) (Requires DP057 or DP100) (Requires KX006)		1,032.00
55-MU011	7292180	3rd and 4th Mechanical Valve, ... Located on right hand console (3rd - Single Acting/Double Acting and 4th - Double Acting, Kickout, Float) (Requires DP057 or DP100) (Requires KX006)		2,064.00

SUBJECT TO AVAILABILITY

5600 SMALL FRAME CLASSIC EDITION

Mississippi State Contract Discount: 20%

MASSEY FERGUSON®

(F.O.B. PORT OF ENTRY)

Order Code	Catalog Number	Description	Approx. Weight (lb.)	List Price
REAR 3-POINT HITCH				
95-GC001	Base	Category 2 Ball End Links		**In Base**
95-GC003	7292176	Category 2 Hook End Links and Cat 2 Balls and Cones		No Charge
REAR THREE POINT STABILIZERS				
165-YG001	Base	Variable Float Telescopic Stabilizers		**In Base**
FRONT AXLE				
65-NA030	Base	4wd Power Front Axle		**In Base**
65-NA004	7292177	2wd Front Axle		(7,957.00)
INSTRUMENT PANEL / CONTROL CENTER DISPLAY				
175-BA005	Base	Analog and Digital Instrument Panel w/o Radar or Slip Control		**In Base**
175-BA003	7293084	Analog and Digital Instrument Panel with Radar (For Actual Ground Speed) and Slip Control.		808.00

SUBJECT TO AVAILABILITY

5600 SMALL FRAME CLASSIC EDITION

MASSEY FERGUSON®

Mississippi State Contract Discount: 20%

(F.O.B. PORT OF ENTRY)

Order Code	Catalog Number	Description	Approx. Weight (lb.)	List Price

TIRES for 5609 and 5610

TIRE BRAND SELECTION

70-Blank	7294212	Factory Brand Choice		No Charge
70-T0001	7294195	Michelin Brand Required		1,552.00
70-T0007	7294197	Firestone Brand Required		1,158.00
70-T0010	7294198	Trelleborg Brand Required		1,158.00

FRONT AND REAR TIRES

2WD - 8 Lug Steel - Set of 2

75-W1693	7292861B3 7293778B3	Rear: 18.4R30 R1W (MI, FI) Front: 10.00-16 R1W F2		(909.00)
75-W1097	7292883B3 7293778B3	Rear: 13.6R38 R1W (MI) Front: 10.00-16 R1W F2		(1,600.00)
75-W1046	7292877B3 7293778B3	Rear: 16.9R34 R1W (MI, FI, TR) Front: 10.00-16 R1W F2		(1,263.00)
75-W1697	7292880B3 7293778B3	Rear: 14.9R38 R1W (MI, FI) Front: 10.00-16 R1W		(1,192.00)
75-W1124	7292862B3 7293778B3	Rear: 18.4R34 R1W (MI, FI, TR) Front: 10.00-16 R1W F2		(754.00)
75-W1177	7292863B3 7293778B3	Rear: 16.9R38 R1W (MI, FI, TR) Front: 10.00-16 R1W F2		(707.00)

4WD - 8 Lug Steel - Set of 2

75-Base	7292877B3 7293760B3	Rear: 16.9R34 R1W (MI, FI, TR) Front: 340/85R24 (13.6R24) R1W (MI, FI, TR)		**In Base**
75-W1662	7292861B3 7293760B3	Rear: 18.4R30 R1W (MI, FI) Front: 13.6R24 R1W (MI)		353.00
75-W1712	7292883B3 7293760B3	Rear: 13.6R38 R1W (MI) Front: 13.6R24 R1W (MI)		(337.00)
75-W1695	7292878B3 7293773B3	Rear: 480/70R34 R1W (MI, FI, TR) Front: 380/70R24 R1W (MI, FI, TR)		1,260.00
75-W1699	7292880B3 7293760B3	Rear: 14.9R38 R1W (MI, FI) Front: 13.6R24 R1W (MI, FI)		71.00
75-W1696	7292862B3 7293774B3	Rear: 18.4R34 R1W (MI, FI, TR) Front: 14.9R24 R1W (MI, FI, TR)		868.00
75-W1692	7292879B3 7293775B3	Rear: 520/70R34 R1W (MI, FI) Front: 420/70B24 R1W (MI, FI)		2,267.00
75-W1664	7292863B3 7293761B3	Rear: 420/85R38 R1W (MI, FI, TR) Front: 340/85R28 R1W (MI, FI, TR)		746.00
75-W1700	7292881B3 7293780B3	Rear: 480/70R38 R1W (MI, FI, TR) Front: 380/70R28 R1W (MI, FI, TR)		2,118.00
5609 ONLY				
75-W1086	7292876B3 7292757B3	Rear: 16.9R30 R1W (MI, FI) Front: 11.2R24 R1W (MI, FI)		(543.00)
5610 ONLY				
75-W1481	7292876B3 7293772B3	Rear: 16.9R30 R1W (MI, FI) Front: 12.4R24 R1W (MI, FI, GY)		(501.00)

SUBJECT TO AVAILABILITY

(F.O.B. PORT OF ENTRY)

TIRES for 5609 and 5610

FRONT AND REAR TIRES- continued

Order Code	Catalog Number	Description	Approx. Weight (lb.)	List Price
		Welded Steel Standard Offset with Spacers - Set of 2		
75-W1613	7292888B3	Rear: 540/65R30 R1W (MI)		TBA
	7292754B3	Front: 405/70R20 R1W (MI)		
75-W1342	7292884B3	Rear: 540/65R34 R1W (MI, FI, TR)		367.00
	7292751B3	Front: 440/65R24 R1W (MI, FI, TR)		
75-W1344	7292885B3	Rear: 600/65R34 R1W (MI, FI)		1,145.00
	7292752B3	Front: 480/65R24 R1W (MI, FI)		
75-W1286	7292858B3	Rear: 540/65R38 R1W (MI, FI, TR)		3,070.00
	7293757B3	F: 440/65R28 R1W (MI, FI, TR)		
75-W1371	7292889B3	R: 600/60R38 R1W (MI).		1,859.00
	7292756B3	F: 480/60R28 R1W (MI)		
75-W1514	7292875B3	Rear: 440/80R34 R1W (Nokian Industrial)		6,670.00
	7293770B3	Front: 360/80R24 R1W (Nokian Industrial)		
75-W1476	7292871B3	Rear: 480/80R34 R1W (Nokian Industrial).		8,200.00
	7293767B3	Front: 400/80R24 R1W (Nokian Industrial)		
5609 ONLY				
75-W1475	7292886B3	Rear: 440/80R30 R1W (Nokian Industrial)		5,417.00
	7292753B3	Front: 11.2R24 R1W (Nokian Industrial)		
5610 ONLY				
75-W1615	7292887B3	Rear: 480/80R30 R1W (TR)		(1,025.00)
	7292755B3	Front: 320/70R24 R1W (TR)		

SUBJECT TO AVAILABILITY

5600 SMALL FRAME CLASSIC EDITION

Mississippi State Contract Discount: 20%

MASSEY FERGUSON®

(F.O.B. PORT OF ENTRY)

Order Code	Catalog Number	Description	Approx. Weight (lb.)	List Price
PTO				
5609				
100-LA062	Base	540/540E RPM 6 Spline with Economy PTO		**In Base**
100-LA066	7292159	540/540E/1000 RPM PTO with Economy PTO 540 RPM 6 Spline and 1000 RPM 21 Spline		478.00
5610				
100-LA066	Base	540/540E/1000 RPM PTO with Economy PTO 540 RPM 6 Spline and 1000 RPM 21 Spline		**In Base**
100-LA062	7292182	540/540E RPM 6 Spline with Economy PTO		(478.00)
FRONT HITCH				
230-FA000	Base	Less Front Hitch		**In Base**
230-F1118	7292167	1800 KG Front Linkage with Couplers Requires NA030		5,480.00
LOADER PROVISION				
350-LL000	Base	Less Loader Provisions		**In Base**
350-LL001	7293445	Front Loader Provision - Mech Joystick Loader Control, Including Hydraulics and Subframe Requires : 26 GPM (98 L/min) Twin Flow Open Center System (DP100)		6,155.00
CAB				
365-AF009	7294248	Radio (MP3 Compatible), Aerial & Speakers		602.00
365-AF011	7294227	Radio (CD Player, MP3 Compatible),Aerial & Speakers		818.00
135-AK001	7292029	Rear Wiper / Washer		408.00
125-AE026	7292027	Air Suspended Seat - Manual Adjustment		885.00
125-AE027	7292189	Air Suspended Seat - Automatic Adjustment		1,049.00
140-AI020	7293077	Standard Cab Roof with Roof Hatch		262.00
140-AI021	7293078	Visio Roof (Requires VG019- 2 Front Double Bulb and 2 Rear Double Bulb Lighting Option)		1,524.00
115-AM084	7293559	Mechanical Cab Suspension		1,639.00

SUBJECT TO AVAILABILITY

5600 SMALL FRAME CLASSIC EDITION

Mississippi State Contract Discount: 20%

MASSEY FERGUSON®

(F.O.B. PORT OF ENTRY)

Order Code	Catalog Number	Description	Approx. Weight (lb.)	List Price
REAR WHEEL WEIGHTS				
325-RD002	7293328*	2 Sets of 110 LBS (50 KG) weights (4 weights total) . . Mounts Externally to Wheel	1102	577.00
325-RD004	7293330*	1 Set of 110 LBS (50 KG) and1 Set of . . . . . 440 LBS (200 KG) (4 weights total) Mounts Externally to Wheel	1100	865.00
		***ONLY AVAILABLE ON WELDED RIMS (NON ADJUSTABLE)**		
ELECTRICAL				
215-CB002	Base	Engine Block Heater - 110 Volt		**In Base**
215-CB000	7293593	Less Engine Block Heater.		(207.00)
ALTERNATOR				
220-CE015	Base	120 AMP Alternator		**In Base**
220-CE020	7292190	175 AMP Alternator		205.00
LIGHTING				
205-VF013	7293103	Dual Roof-Mounted Rotating Beacons, Left and Right . (Includes SAE SMV sign)		502.00
195-VG019	7295102	2 Front Double Bulb and 2 Rear Double Bulb Worklights (Required for Visio Roof Cab Option)		284.00
190-VK004	7293597	Worklights on Handrails and Rear Fenders		522.00

SUBJECT TO AVAILABILITY

5600 SMALL FRAME CLASSIC EDITION

Mississippi State Contract Discount: 20%

(F.O.B. PORT OF ENTRY)

Order Code	Catalog Number	Description	Approx. Weight (lb.)	List Price
PIVOTING FRONT FENDERS				
155-WE000	Base	Less Pivoting Front Fenders		**In Base**
155-WE110	7294204*	Pivoting Front Fenders - Standard Width . . . . . Width depends on tire selection; see Chart Below		1,633.00
155-WE111	7294205*	Pivoting Front Fenders - Wide Width . . . . . Width depends on tire selection; see Chart Below		1,926.00

***REQUIRES 4WD FRONT AXLE**

Fender Size		
Standard	**Wide**	**Tire Sizes**
320 mm	355 mm	320/85R34 (12.4R34) 280/85R24 (11.2R24) 320/70R24
355 mm	380 mm	340/85R24 (13.6R24) 340/85R28 (13.6R28) 360/80R24
380 mm	410 mm	380/85R24 (14.9R24) 380/70R24 380/70R28
410 mm	470 mm	405/70R20 420/70R24 440/65R24 440/65R28
470 mm	520 mm	420/70B24 480/65R24
520 mm	620 mm	480/60R28

REAR FENDERS			
255-WD012	Base	Standard Width Fenders (78 inch) LESS Rear Extensions	**In Base**
255-WD013	7293450	Standard Width Fenders (78 inch) w/ Rear Extensions.	1,272.00
255-WD017	7293107	Wide Fender (90.5 inches) with Rear Extensions	1,272.00

SUBJECT TO AVAILABILITY

5600 SMALL FRAME CLASSIC EDITION

Mississippi State Contract Discount: 20%

MASSEY FERGUSON®

(F.O.B. PORT OF ENTRY)

Order Code	Catalog Number	Description	Approx. Weight (lb.)	List Price
MISCELLANEOUS				
35-EN002	7292064	Creeper Gear (14:1 Reduction)		2,561.00
250-GS001	7293100	Hydraulic Trailer Brakes		785.00
225-LQ001	7293553	Ecology Drain and Engine Water Separator		448.00
275-TC005	7294210	French Language OIB		No Charge
275-TC011	7294211	Spanish Language OIB		No Charge

DEALER INSTALLED OPTIONS

FRONT WEIGHTS

5020186M	8 x 55 KG (121 lbs.) Front Weights	968	1,485.00
5020187M	10 x 55 KG (121 lbs.) Front Weights	1210	1,857.00

SUBJECT TO AVAILABILITY

5600 LARGE FRAME CLASSIC EDITION

MASSEY FERGUSON®

Mississippi State Contract Discount: 20%

(F.O.B. PORT OF ENTRY)

CLASSIC EDITION FEATURES

ENGINE
AGCO POWER 4.4L (268 cu. in.) 4 Cylinder, Tier 4i Compliant
- Air-to-Air Aftercooled, Common Rail Injection, Turbocharged
- e3 SCR Technology

Electronic Engine Management (EEM) with Dual ERPM Settings
Electronic Controlled Viscous Fan Drive
Dual Element Dry Type Air Cleaner
Vertical Exhaust at Right Front Cab Post
Cooling System: Antifreeze to Minus -40C
Fuel Tank Capacity: 49 Gal (185L)
DEF Tank Capacity: 6.6 Gal (25L)

POWERTRAIN
Dyna-4 Transmission
- 16F/16R Semi-Powershift, 4 Ranges with 4 Powershifts Per Range
- T-Handle Control located on Right Hand Console

Multi-Disc Wet Brakes
Power Differential Lock
Independent PTO:
- 540/540E with 6 Spline Shaft

Rear Fender Mounted PTO Shut-Off
Flange Axles

FRONT WHEEL ASSIST AXLE
Power Front Axle (PFA)
- 8 Bolt Pattern

Shielded Center Drive Line with Electro-Hydraulic Control and Front Wheel Drive Differential Lock

HYDRAULICS
Open Center Load Sensing 15 GPM (57 L/min) Pump
2900 PSI (200 Bar) Maximum Pressure
2 Mechanical Valves – Lever Controlled on Right Hand Console
Hydrostatic Power Steering

HITCH
3-Point Hitch: Category 2/3 Linkage Ball Ends
- Active Transport Control
- Lower Link Sensing
- Electronic Draft Control, Electronic Height Control, and Rate of Drop
- Variable Float Telescopic Stabilizers
- Left and Right Side External 3-Point Control

Drawbar: Category 2, Clevis and Drop Pin

ELECTRICAL SYSTEM
120 Amp Alternator
12V Battery, 600 CCA (SAE)
7 Pin ASAE Rear Trailer Electrical Outlet
Electrical Isolator Switch and Jumpstart Point
110V Engine Block Heater
Ignition with Neutral Start and Key Shutoff

LIGHTING
4 Front Hood Mounted Lights
Four Front Single Bulb Worklights
Four Rear Single Bulb Worklights
Taillights, Flashing Warning Lights and Turn Signals

INSTRUMENTS
Tachometer: Digital and Analog
PTO Speed: Digital
Ground Speed Display: Digital
Fuel Level and Coolant Temp Gauges
Warning/Information Lights

OPERATOR AREA
6 Post Cab
Transmission Control T-Handle on Right Hand Console
Adjustable Steering Column
Front Sun Visor
Air Conditioning and Heater
Mechanical Swivel Seat with Armrest and Seatbelt
Front Windshield Wiper/Washer
Dual Large Telescoping Outside Rear View Mirrors
Single Inside Rear View Mirror
2 Audio Speakers and Antenna
2 Electrical Sockets in Cab

WHEELS AND TIRES
Rear: 460/85R34 R1W 8 Lug Pressed Wheels
Front: 380/85R24 R1W Waffle Wheel

OTHER STANDARD FEATURES
AGCOMMAND Ready with Antenna, Bracket, and Harness (To Complete, See Technology Section of Price Books)
Hi VIS Front Hood, Single Piece Raising with Lockable Front Latch
Lockable Tool Box
SMV Sign
Molded Rear Fenders
English Op Manual

SUBJECT TO AVAILABILITY

NOT FOR SALE IN STATE OF NEBRASKA

5600 LARGE FRAME CLASSIC EDITION

Mississippi State Contract Discount: 20%

MASSEY FERGUSON®

(F.O.B. PORT OF ENTRY)

Order Code	Catalog Number	Description	Approx. Weight (lb.)	List Price

ONE *ORDER CODE* FROM EACH GROUP MUST BE SPECIFIED. (Unless In Base Option is desired)

BASE MACHINE

DYNA-4 EDITIONS

MF5611~D4~ES	7292213	Massey 5611 Classic Tractor 80 PTO HP.		87,404.00
MF5612~D4~ES	7292214	Massey 5612 Classic Tractor 90 PTO HP.		91,564.00
MF5613~D4~ES	7292215	Massey 5613 Classic Tractor 100 PTO HP		95,724.00

TRANSMISSION OPTION

25-EA635	Base	Dyna-4 Transmission with 16F/16R gears 25 MPH . . . (40 KPH) with Speed Matching		**In Base**
25-EA637	7292175	Dyna-4 Transmission with 16F/16R gears 25 MPH . . . (40 KPH) with AUTO-DRIVE		266.00

EQUIPMENT REQUIRED FOR NORTH AMERICA

	7293488	Instructional Seat		472.00
	7292141	Front Weight Carrier . . . . . Removed when factory installed front 3-Point Hitch is selected.		**In Base**

MARKETING PACKAGE

	MKT0323	Upgrade Package Includes: . . . . . 26 GPM (98 L/min) Twin Flow Open Center System Radio (MP3 Compatible), Aerial & Speakers Dyna-4 Transmission w/ 16F/16R gears 25 MPH (40 KPH) w/ AUTO-DRIVE Air Suspended Seat - Manual Adjustment		2,741.00
	MKT0324	Upgrade Package Includes: . . . . . Visio Roof Dyna-4 Transmission w/ 16F/16R gears 25 MPH (40 KPH) w/ AUTO-DRIVE 26 GPM (98 L/min) Twin Flow Open Center System		2,778.00

SUBJECT TO AVAILABILITY

5600 LARGE FRAME CLASSIC EDITION

Mississippi State Contract Discount: 20%

(F.O.B. PORT OF ENTRY)

Order Code	Catalog Number	Description	Approx. Weight (lb.)	List Price
❖ **AUXILIARY HYDRAULIC FLOW**				
370-DP057	Base	15 GPM (57 L/min) Open Center System		**In Base**
370-DP100	7292178	26 GPM (98 L/min) Twin Flow Open Center System . .		988.00
370-DP110	7292195	29 GPM (110 L/min) Closed Center Load Sensing . . . (Not compatible with NA004)		4,559.00
❖ **AUXILIARY VALVE 1 & 2**				
50-KX004	Base	2 Mechanical Controlled Valves, ... Located on right hand console (1st - Single Acting/Double Acting, Flow Dividing and 2nd- Single Acting/Double Acting, Zero Leak, Notch Float) (Requires DP057 or DP100) (Requires MU000)		**In Base**
50-KX005	7292192	2 Mechanical Controlled Valves, ... Located on right hand console (1st - Single Acting/Double Acting, Flow Dividing, Kickout and 2nd - Double Acting, Kickout, Float) (Requires DP100) (Requires MU000)		No Charge
50-KX006	7292193	2 Mechanical Controlled Valves, ... Located on right hand console (1st - Double Acting, Flow Dividing, Kickout, Zero Leak and 2nd - Single Acting/Double Acting, Zero Leak, Notch Float) (Requires DP057 or DP100) (Requires MU002)		No Charge
50-KX010	7292300	2 Mechanical Controlled Valves, ... Located on right hand console. (1st and 2nd - Flow Dividing, Kickout, Zero Leak, Float) (Requires DP110) (Requires MU000 or MU003)		No Charge
❖ **AUXILIARY VALVE 3 & 4**				
55-MU000	Base	Less Additional Valve . . . . . (Requires DP057, DP100, or DP110) (Requires KX004, KX005, KX010)		**In Base**
55-MU002	7292194	3rd Mechanical Valve Only, ... Located on right hand console (Single Acting/Double Acting) (Requires DP057 or DP100) (Requires KX006)		1,032.00
55-MU003	7292302	3rd Valve only, Mechanically Controlled. . . . . with lever located in Right Hand Console Kickout, Zero Leak, Flow Dividing, Float (Requires DP110) (Requires KX010)		1,002.00

If 4 Factory Installed Rear Remotes Valves are Required; Loader Provision S3002 Must Be Selected. A 4th Rear Remote Valve Can Also Be Ordered Through AGCO Parts, Which Does NOT Require the Selection of a Factory Loader Provision.

SUBJECT TO AVAILABILITY

❖ Please note that Loader Provisions S3002 includes key hydraulic components and may require this option group to be left blank

5600 LARGE FRAME CLASSIC EDITION

Mississippi State Contract Discount: 20%

MASSEY FERGUSON®

(F.O.B. PORT OF ENTRY)

Order Code	Catalog Number	Description	Approx. Weight (lb.)	List Price
FRONT AXLE				
65-NA030	Base	4wd Power Front Axle		**In Base**
65-NA004	7292177	2wd Front Axle		(7,957.00)
65-NA032	7293408	Suspended Front Axle		6,898.00
REAR 3-POINT HITCH				
95-GC009	Base	Category 2/3 Telescopic Ball End Links		**In Base**
95-GC022	7293572	Category 3 Hook End Links and Cat 2/3 Balls and Cones		No Charge
REAR THREE POINT STABILIZERS				
165-YG001	Base	Variable Float Telescopic Stabilizers		**In Base**
INSTRUMENT PANEL / CONTROL CENTER DISPLAY				
175-BA005	Base	Analog and Digital Instrument Panel		**In Base**
175-BA003	7293084	Analog and Digital Instrument Panel with Radar (For Actual Ground Speed) and Slip Control.		808.00

SUBJECT TO AVAILABILITY

5600 LARGE FRAME CLASSIC EDITION

Mississippi State Contract Discount: 20%

(F.O.B. PORT OF ENTRY)

Order Code	Catalog Number	Description	Approx. Weight (lb.)	List Price
TIRE BRAND SELECTION				
70-Blank	7294212	Factory Brand Choice		No Charge
70-T0001	7294195	Michelin Brand Required		1,552.00
70-T0007	7294197	Firestone Brand Required		1,158.00
70-T0010	7294198	Trelleborg Brand Required		1,158.00
FRONT AND REAR TIRES				
		2WD - 8 Lug Steel - Set of 2		
75-W1693	7292861B2 7293778B2	Rear: 18.4R30 R1W (MI) Front: 10.00-16 R1W F2		(1,778.00)
75-W1097	7292883B2 7293778B2	Rear: 13.6R38 R1W (MI, FI) Front: 10.00-16 R1W F2		(2,468.00)
75-W1046	7292877B2 7293778B2	Rear: 16.9R34 R1W (MI, FI, TR) Front: 10.00-16 R1W F2		(2,131.00)
75-W1697	7292880B2 7293778B2	Rear: 14.9R38 R1W (MI, FI) Front: 10.00-16 R1W F2		(2,060.00)
75-W1124	7292862B2 7293778B2	Rear: 18.4R34 R1W(MI, FI, TR) Front: 10.00-16 R1W F2		(1,622.00)
75-W1177	7292863B2 7293778B2	Rear: 16.9R38 R1W (MI, FI, TR) Front: 10.00-16 R1W F2		(1,575.00)
75-W1688	7292864B2 7293778B2	Rear: 460/85R38 R1W (MI, FI, TR) Front: 10.00-16 R1W F2		(260.00)
		4WD - 8 Lug Steel - Set of 2		
75-Base	7292862B2 7293774B2	Rear: 18.4R34 R1W (MI, FI, TR) Front: 14.9R24 R1W (MI, FI, TR)		**In Base**
75-W1481	7292876B2 7293772B2	Rear: 16.9R30 R1W (MI, FI) Front: 12.4R24 R1W (MI, FI)		(1,369.00)
75-W1662	7292861B2 7293760B2	Rear: 18.4R30 R1W (MI) Front: 13.6R24 R1W (MI)		(515.00)
75-W1712	7292883B2 7293760B2	Rear: 13.6R38 R1W (MI, FI) Front: 13.6R24 R1W (MI, FI)		(1,205.00)
75-W1695	7292878B2 7293773B2	Rear: 480/70R34 R1W (MI, FI) Front: 380/70R24 R1W (MI, FI)		391.00
75-W1699	7292880B2 7293760B2	Rear: 14.9R38 R1W (MI, FI) Front: 13.6R24 R1W (MI, FI)		(797.00)
75-W1694	7292877B2 7293760B2	Rear: 16.9R34 R1W (MI, FI) Front: 13.6R24 R1W (MI, FI)		(868.00)
75-W1692	7292879B2 7293775B2	Rear: 520/70R34 R1W (MI, FI) Front: 420/70B24 R1W (MI, FI)		1,399.00
75-W1664	7292863B2 7293761B2	Rear: 16.9R38 R1W (MI, FI, TR) Front: 13.6R28 R1W (MI, FI, TR)		(123.00)
75-W1700	7292881B2 7293780B2	Rear: 480/70R38 R1W (MI, FI, TR) Front: 380/70R28 R1W (MI, FI, TR)		1,249.00
75-W1297	7292864B2 7294786B2	Rear: 460/85R38 R1W (MI, FI, TR) Front: 380/85R28 R1W (MI, FI, TR)		1,521.00
75-W1701	7292882B2 7293776B2	Rear: 520/70R38 R1W (MI, FI, TR) Front: 420/70R28 R1W (MI, FI, TR)		2,531.00

SUBJECT TO AVAILABILITY

(F.O.B. PORT OF ENTRY)

Order Code	Catalog Number	Description	Approx. Weight (lb.)	List Price
FRONT AND REAR TIRES- continued				
		Welded Steel Standard Offset with Spacers - Set of 2		
75-W1615	7292887B2 7292755B2	Rear: 480/80R30 R1W (TR) Front: 320/70R24 R1W (TR)		(1,893.00)
75-W1342	7292884B2 7292751B2	Rear: 540/65R34 R1W (MI) Front: 440/65R24 R1W (MI)		(502.00)
75-W1344	7292885B2 7292752B2	Rear: 600/65R34 R1W (MI, FI) Front: 480/65R24 R1W (MI, FI)		277.00
75-W1286	7292858B2 7293757B2	Rear: 540/65R38 R1W (MI, FI, TR) Front: 440/65R28 R1W (MI, FI, TR)		2,202.00
75-W1371	7292889B2 7292756B2	Rear: 600/60R38 R1W (MI) Front: 480/60R28 R1W (MI)		991.00
75-W1257	7292859B2 7294785B2	Rear: 600/65R38 R1W (MI, FI, TR) Front: 480/65R28 R1W (MI, FI, TR)		2,890.00
75-W1476	7292871B2 7293767B2	Rear: 480/80R34 R1W (Nokian Industrial) Front: 400/80R24 R1W (Nokian Industrial)		7,332.00
75-W1511	7292872B2 7292890B2	Rear: 480/80R38 Industrial (Nokian Industrial) Front: 400/80R28 Industrial (Nokian Industrial)		9,394.00
75-W1810	7292896B2 7293774B2	Rear: 18.4R34 R1W (MI, FI, TR) Front: 14.9R24 R1W (MI, FI, TR)		TBA
75-W1299	7292897B2 7294786B2	Rear: 460/85R38 R1W (MI, FI, TR) Front: 380/85R28 R1W (MI, FI, TR)		TBA

SUBJECT TO AVAILABILITY

5600 LARGE FRAME CLASSIC EDITION

Mississippi State Contract Discount: 20%

MASSEY FERGUSON®

(F.O.B. PORT OF ENTRY)

Order Code	Catalog Number	Description	Approx. Weight (lb.)	List Price
PTO				
100-LA062	Base	540/540E RPM 6 Spline with Economy PTO . . . . . **Delayed Production please contact Marketing.**		**In Base**
100-LA066	7292159	540/540E/1000 RPM PTO with Economy PTO . . . . . 540 RPM 6 Spline and 1000 RPM 21 Spline		478.00
FRONT HITCH				
230-FA000	Base	Less Front Hitch		**In Base**
230-F1119	7292199	1800 KG Front Linkage with Coupler . . . . . Requires NA030		5,480.00
LOADER PROVISION				
350-LL000	Base	Less Loader Provisions		**In Base**
350-LL001	7293445	Front Loader Provision - Mech Joystick Loader Control, Including Hydraulics and Subframe Requires- 1st/2nd Mechanical Control Valves 26 GPM (98 L/min) Twin Flow Open Center System (DP100) or 29 GPM (110 L/min) Closed Center Load Sensing(DP110)		6,155.00
350-S3002	7293680	Front Loader Provisions including . . . . . Hydraulic and Subframe also includes: DP100 - 26 GPM (98 L/min) Twin Flow Open Center System KX012 - Valves 1 and 2 Electric, with Multi-Function Joystick on the Armrest MU014 - 3rd and 4th Mechanical Valve Located on right hand console.		10,526.00
CAB				
365-AF009	7294248	Radio (MP3 Compatible), Aerial & Speakers		602.00
365-AF011	7294227	Radio (CD Player, MP3 Compatible), Aerial & Speakers		818.00
135-AK001	7292029	Rear Wiper / Washer		408.00
125-AE026	7292027	Air Suspended Seat - Manual Adjustment		885.00
125-AE027	7292189	Air Suspended Seat - Automatic Adjustment		1,049.00
140-AI020	7293077	Standard Cab Roof with Roof Hatch		262.00
140-AI021	7293078	Visio Roof . . . . . Requires VG019- 2 Front Double Bulb and 2 Rear Double Bulb Lighting Option		1,524.00
115-AM084	7293559	Mechanical Cab Suspension		1,639.00

SUBJECT TO AVAILABILITY

5600 LARGE FRAME CLASSIC EDITION

Mississippi State Contract Discount: 20%

MASSEY FERGUSON®

(F.O.B. PORT OF ENTRY)

Order Code	Catalog Number	Description	Approx. Weight (lb.)	List Price
REAR WHEEL WEIGHTS				
325-RD002	7293328	2 Sets of 110 LBS (50 KG) weights (4 weights total) . . Mounts Externally to Wheel Only Available on Welded Rims (Non Adjustable)	1102	577.00
325-RD004	7293330	1 Set of 110 LBS (50 KG) and1 Set of . . . . . 440 LBS (200 KG) (4 weights total) Mounts Externally to Wheel Only Available on Welded Rims (Non Adjustable)	1100	865.00
ELECTRICAL				
215-CB002	Base	Engine Block Heater - 110 Volt		**In Base**
215-CB000	7293593	Less Engine Block Heater.		(207.00)
ALTERNATOR				
220-CE015	Base	120 AMP Alternator		**In Base**
220-CE020	7292190	175 AMP Alternator		205.00
LIGHTING				
205-VF013	7293103	Dual Roof-Mounted Rotating Beacons, Left and Right . Includes SAE SMV sign		502.00
195-VG019	7295102	2 Front Double Bulb and 2 Rear Double Bulb Worklights (Required for Visio Roof Cab Option)		284.00
190-VK004	7293597	Worklights on Handrails and Rear Fenders		522.00

SUBJECT TO AVAILABILITY

5600 LARGE FRAME CLASSIC EDITION

Mississippi State Contract Discount: 20%

(F.O.B. PORT OF ENTRY)

Order Code	Catalog Number	Description	Approx. Weight (lb.)	List Price

PIVOTING FRONT FENDERS

155-WE000	Base	Less Pivoting Front Fenders		**In Base**
155-WE110	7294204	Pivoting Front Fenders - Standard Width . . . . . Width depends on tire selection; see Chart Below Requires 4WD Front Axle		1,633.00
155-WE111	7294205	Pivoting Front Fenders - Wide Width . . . . . Width depends on tire selection; see Chart Below Requires 4WD Front Axle		1,926.00

Fender Size		
Standard	**Wide**	**Tire Sizes**
320 mm	355 mm	320/85R24 (12.4R24) 320/70R24
355 mm	380 mm	340/85R24 (13.6R24) 340/85R28 (13.6R28)
380 mm	410 mm	380/85R28 (14.9R28) 400/80R24 400/80R28 380/85R24 (14.9R24) 380/70R24 380/70R28
410 mm	470 mm	420/70R24 420/70R28 440/65R24 440/65R28
470 mm	520 mm	480/65R28 420/70B24 480/65R24
520 mm	620 mm	480/60R28 520/60R28

REAR FENDERS

255-WD012	Base	Standard Width Fenders (78 inch) LESS Rear Extensions	**In Base**
255-WD013	7293450	Standard Width Fenders (78 inch) w/ Rear Extensions.	1,272.00
255-WD017	7293107	Wide Fender (90.5 inches) with Rear Extensions	1,272.00

SUBJECT TO AVAILABILITY

5600 LARGE FRAME CLASSIC EDITION

Mississippi State Contract Discount: 20%

MASSEY FERGUSON®

(F.O.B. PORT OF ENTRY)

Order Code	Catalog Number	Description	Approx. Weight (lb.)	List Price
MISCELLANEOUS				
35-EN002	7292064	Creeper Gear (14:1 Reduction)		2,561.00
250-GS001	7293100	Hydraulic Trailer Brakes		785.00
250-GS062	7293551	Pneumatic Trailer Brakes Not Compatible with 2wd Front Axle (NA004)		6,505.00
225-LQ001	7293553	Ecology Drain and Engine Water Separator		448.00
275-TC005	7294210	French Language OIB		No Charge
275-TC011	7294211	Spanish Language OIB		No Charge
DEALER INSTALLED OPTIONS				
FRONT WEIGHTS				
	5020186M	8 x 55 KG (121 lbs.) Front Weights	968	1,485.00
	5020187M	10 x 55 KG (121 lbs.) Front Weights	1210	1,857.00

SUBJECT TO AVAILABILITY

5600 LARGE FRAME DELUXE EDITION

Mississippi State Contract Discount: 20%

(F.O.B. PORT OF ENTRY)

DELUXE EDITION FEATURES

ENGINE
AGCO POWER 4.4L (268 cu. in) 4 Cylinder, Tier 4i Compliant
- Air-to-Air Aftercooled, Common Rail Injection, Turbocharged
- e3 SCR Technology

Electronic Engine Management (EEM) with Dual ERPM Settings
Electronic Controlled Viscous Fan Drive
Dual Element Dry Type Air Cleaner
Vertical Exhaust at Right Front Cab Post
Cooling System: Antifreeze to Minus -40C
Fuel Tank Capacity: 49 Gal (185L)
DEF Tank Capacity: 6.6 Gal (25L)

POWERTRAIN
Dyna-4 Transmission
- 16F/16R Semi-Powershift, 4 Ranges with 4 Powershifts Per Range with AUTODRIVE
- T-Handle Control located on Right Hand Armrest

Multi-Disc Wet Brakes
Power Differential Lock
Independent PTO:
- 540/540E/1000 with 6 and 21 Spline Shaft

Rear Fender Mounted PTO Shut-Off
Flange Axles

FRONT WHEEL ASSIST AXLE
Power Front Axle (PFA)
- 8 Bolt Pattern

Shielded Center Drive Line with Electro-Hydraulic Control and Front Wheel Drive Differential Lock

HYDRAULICS
Twin Flow Open Center System 26 GPM (98 L/min) Pump
2900 PSI (200 Bar) Maximum Pressure
Valves 1st & 2nd Electric, with Multi-Function Joystick on the Armrest
Valves 3rd & 4th Mechanical, with levers located in Right Hand Console
Hydrostatic Power Steering

HITCH
3-Point Hitch: Category 2/3 Linkage Ball Ends
- Active Transport Control
- Lower Link Sensing
- Electronic Draft Control, Electronic Height Control, and Rate of Drop
- Variable Float Telescopic Stabilizers
- Left and Right Side External 3-Point Control

Drawbar: Category 2, Clevis and Drop Pin

ELECTRICAL SYSTEM
175 Amp Alternator
12V Battery, 600 CCA (SAE)
7 Pin ASAE Rear Trailer Electrical Outlet
Electrical Isolator Switch and Jumpstart Point
110V Engine Block Heater
Ignition with Neutral Start and Key Shutoff

LIGHTING
4 Front Hood Mounted Lights
Four Front Single Bulb Worklights
Four Rear Single Bulb Worklights
Worklights on Handrails and Rear Fenders
Taillights, Flashing Warning Lights and Turn Signals

INSTRUMENTS
Control Center Display (CCD) with Video Input, Electric Valve Control, Radar with Slip Control and ISOBUS
Tachometer: Digital and Analog
PTO Speed: Digital
Ground Speed Display: Digital
Fuel Level and Coolant Temp Gauges
Warning/Information Lights

OPERATOR AREA
Mechanical Cab Suspension
6 Post Cab
Transmission Control T-Handle on Right Hand Console
Adjustable Steering Column
Front Sun Visor
Air Conditioning and Heater
Automatic Air Suspended Swivel Seat with Armrest and Seatbelt
Front and Rear Windshield Wiper/Washer
Dual Large Telescoping Outside Rear View Mirrors with Electric De-icing and Adjustment
Single Inside Rear View Mirror
Radio (MP3 compatible) with 2 Audio Speakers and Antenna
2 Electrical Sockets in Cab

WHEELS AND TIRES
Rear: 460/85R34 R1W 8 Lug Pressed Wheels
Front: 380/85R24 R1W Waffle Wheel

OTHER STANDARD FEATURES
Pivoting Front Fenders
AGCOMMAND Ready with Antenna, Bracket, and Harness (To Complete, See Technology Section of Price Books)
Hi VIS Front Hood, Single Piece Raising with Lockable Front Latch
Lockable Tool Box
SMV Sign
Molded Rear Fenders
English Op Manual

SUBJECT TO AVAILABILITY

NOT FOR SALE IN STATE OF NEBRASKA

5600 LARGE FRAME DELUXE EDITION

Mississippi State Contract Discount: 20%

MASSEY FERGUSON®

(F.O.B. PORT OF ENTRY)

Order Code	Catalog Number	Description	Approx. Weight (lb.)	List Price

ONE *ORDER CODE* FROM EACH GROUP MUST BE SPECIFIED. (Unless In Base Option is desired)

BASE MACHINE

DYNA-4 EDITIONS

MF5611~D4~EF	7292216	Massey 5611 Deluxe Tractor 80 PTO HP		104,304.00
MF5612~D4~EF	7292217	Massey 5612 Deluxe Tractor 90 PTO HP		108,464.00
MF5613~D4~EF	7292218	Massey 5613 Deluxe Tractor 100 PTO HP		112,624.00

TRANSMISSION OPTION

25-EA637	Base	Dyna-4 Transmission with 16F/16R gears 25 MPH . . . (40 KPH) with AUTO-DRIVE		**In Base**

EQUIPMENT REQUIRED FOR NORTH AMERICA

	7293488	Instructional Seat		472.00
	7292141	Front Weight Carrier . . . . . Removed when factory installed front 3-Point Hitch is selected.		**In Base**

MARKETING PACKAGE

	MKT0342	Upgrade Package Includes: . . . . . Radio (CD Player, MP3 Compatible), Aerial & Speakers Superluxe Grammar Seat		2,540.00

SUBJECT TO AVAILABILITY

5600 LARGE FRAME DELUXE EDITION

Mississippi State Contract Discount: 20%

(F.O.B. PORT OF ENTRY)

Order Code	Catalog Number	Description	Approx. Weight (lb.)	List Price
❖ **AUXILIARY HYDRAULIC FLOW**				
370-DP100	Base	26 GPM (98L/min) Twin Flow Open Center System . . Requires Less Power Beyond		**In Base**
370-DP110	7292196	29 GPM (110 L/min) Closed Center Load Sensing . . . Requires Power Beyond Couplers P/T/LS		3,571.00
❖ **AUXILIARY VALVE 1 & 2**				
50-KX012	Base	Valves 1 and 2 Electric, with Multi-Function Joystick on the Armrest (Requires DP100 or DP110) (Requires MU014 or MU012)		**In Base**
50-KX011	7292301	Valves 1 and 2 Electric, Fingertip Controlled Spool Valves Fingertips Located in Armrest (Requires DP110) (Requires MU012)		No Charge
❖ **AUXILIARY VALVE 3 & 4**				
55-MU014	Base	3rd and 4th Mechanically Controlled Valves, ... with levers located in Right Hand Console (1 x SA/DA FD KO + 1 x DA KO FL) (Requires DP100) (Requires KX012)		**In Base**
55-MU012	7292303	3rd and 4th Mechanically Controlled Valves, ... with levers located in Right Hand Console (2 x ZL KO FL) (Requires DP 110) (Requires KX012 or KX011)		No Charge

❖ Please note that Loader Provisions S3002 includes key hydraulic components and may require this option group to be left blank

POWER BEYOND				
90-GR000	Base	Less Power Beyond		**In Base**
90-GR010	7292197	Power Beyond Couplers P/T/LS. . . . . Requires: 29 GPM (110 L/min) Closed Center Load Sensing (DP110)		716.00
FRONT AXLE				
65-NA030	Base	4wd Power Front Axle		**In Base**
65-NA032	7293408	Suspended Front Axle.		6,898.00

SUBJECT TO AVAILABILITY

5600 LARGE FRAME DELUXE EDITION

Mississippi State Contract Discount: 20%

MASSEY FERGUSON®

(F.O.B. PORT OF ENTRY)

Order Code	Catalog Number	Description	Approx. Weight (lb.)	List Price
REAR 3-POINT HITCH				
95-GC009	Base	Category 2/3 Telescopic Ball End Links.		**In Base**
95-GC022	7293572	Category 3 Hook End Links and Cat 2/3 Balls and Cones		No Charge
REAR THREE POINT STABILIZERS				
165-YG001	Base	Variable Float Telescopic Stabilizers		**In Base**
INSTRUMENT PANEL / CONTROL CENTER DISPLAY				
175-BA008	Base	Analog and Digital Instrument Panel, Control Center . . Display (CCD) with Video Input, Electric Valve Control, Radar with Slip Control and ISOBUS. Requires 175 AMP Alternator (CE020)		**In Base**
175-BA003	7292183	Analog and Digital Instrument Panel with Radar . . . . (For Actual Ground Speed) and Slip Control. No Control Center Display (CCD).		(4,974.00)
175-BA005	7292184	Analog and Digital Instrument Panel w/o Radar or Slip . Control. No Control Center Display (CCD).		(5,782.00)

SUBJECT TO AVAILABILITY

5600 LARGE FRAME DELUXE EDITION

MASSEY FERGUSON®

Mississippi State Contract Discount: 20%

(F.O.B. PORT OF ENTRY)

Order Code	Catalog Number	Description	Approx. Weight (lb.)	List Price
TIRE BRAND SELECTION				
70-Blank	7294212	Factory Brand Choice		No Charge
70-T0001	7294195	Michelin Brand Required		1,552.00
70-T0007	7294197	Firestone Brand Required		1,158.00
70-T0010	7294198	Trelleborg Brand Required		1,158.00
FRONT AND REAR TIRES				
		4WD - 8 Lug Steel - Set of 2		
75-Base	7292862B2 7293774B2	Rear: 18.4R34 R1W (MI, FI, TR) Front: 14.9R24 R1W (MI, FI, TR)		**In Base**
75-W1481	7292876B2 7293772B2	Rear: 16.9R30 R1W (MI, FI) Front: 12.4R24 R1W (MI, FI)		(1,369.00)
75-W1662	7292861B2 7293760B2	Rear: 18.4R30 R1W (MI) Front: 13.6R24 R1W (MI)		(515.00)
75-W1712	7292883B2 7293760B2	Rear: 13.6R38 R1W (MI, FI) Front: 13.6R24 R1W (MI, FI)		(1,205.00)
75-W1695	7292878B2 7293773B2	Rear: 480/70R34 R1W (MI, FI) Front: 380/70R24 R1W (MI, FI)		391.00
75-W1699	7292880B2 7293760B2	Rear: 14.9R38 R1W (MI, FI) Front: 13.6R24 R1W (MI, FI)		(797.00)
75-W1694	7292877B2 7293760B2	Rear: 16.9R34 R1W (MI, FI) Front: 13.6R24 R1W (MI, FI)		(868.00)
75-W1692	7292879B2 7293775B2	Rear: 520/70R34 R1W (MI, FI) Front: 420/70B24 R1W (MI, FI)		1,399.00
75-W1664	7292863B2 7293761B2	Rear: 16.9R38 R1W (MI, FI, TR) Front: 13.6R28 R1W (MI, FI, TR)		(123.00)
75-W1700	7292881B2 7293780B2	Rear: 480/70R38 R1W (MI, FI, TR) Front: 380/70R28 R1W (MI, FI, TR)		1,249.00
75-W1297	7292864B2 7294786B2	Rear: 460/85R38 R1W (MI, FI, TR) Front: 380/85R28 R1W (MI, FI, TR)		1,521.00
75-W1701	7292882B2 7293776B2	Rear: 520/70R38R1W (MI, FI, TR) Front: 420/70R28 R1W (MI, FI, TR)		2,531.00

SUBJECT TO AVAILABILITY

(F.O.B. PORT OF ENTRY)

Order Code	Catalog Number	Description	Approx. Weight (lb.)	List Price
FRONT AND REAR TIRES- continued				
		Welded Steel Standard Offset with Spacers - Set of 2		
75-W1615	7292887B2 7292755B2	Rear: 480/80R30 R1W (TR) Front: 320/70R24 R1W (TR)		(1,893.00)
75-W1342	7292884B2 7292751B2	Rear: 540/65R34 R1W (MI) Front: 440/65R24 R1W (MI)		(502.00)
75-W1344	7292885B2 7292752B2	Rear: 600/65R34 R1W (MI, FI) Front: 480/65R24 R1W (MI, FI)		277.00
75-W1286	7292858B2 7293757B2	Rear: 540/65R38 R1W (MI, FI, TR) Front: 440/65R28 R1W (MI, FI, TR)		2,202.00
75-W1371	7292889B2 7292756B2	Rear: 600/60R38 R1W (MI) Front: 480/60R28 R1W (MI)		991.00
75-W1257	7292859B2 7294785B2	Rear: 600/65R38 R1W (MI, FI, TR) Front: 480/65R28 R1W (MI, FI, TR)		2,890.00
75-W1476	7292871B2 7293767B2	Rear: 480/80R34 R1W (Nokian Industrial) Front: 400/80R24 R1W (Nokian Industrial)		7,332.00
75-W1511	7292872B2 7292890B2	Rear: 480/80R38 Industrial (Nokian Industrial) Front: 400/80R28 Industrial (Nokian Industrial)		9,394.00
75-W1810	7292896B2 7293774B2	Rear: 18.4R34 R1W (MI, FI, TR) Front: 14.9R24 R1W (MI, FI, TR)		TBA
75-W1299	7292897B2 7294786B2	Rear: 460/85R38 R1W (MI, FI, TR) Front: 380/85R28 R1W (MI, FI, TR)		TBA

SUBJECT TO AVAILABILITY

5600 LARGE FRAME DELUXE EDITION

Mississippi State Contract Discount: 20%

(F.O.B. PORT OF ENTRY)

Order Code	Catalog Number	Description	Approx. Weight (lb.)	List Price
PTO				
100-LA066	Base	540/540E/1000 RPM PTO with Economy PTO . . . . . 540 RPM 6 Spline and 1000 RPM 21 Spline		**In Base**
100-LA062	7292182	540/540E RPM 6 Spline with Economy PTO		(478.00)
FRONT HITCH				
230-FA000	Base	Less Front Hitch		**In Base**
230-F1119	7292199	1800 KG Front Linkage with Couplers . . . . . Requires NA030		5,480.00
LOADER PROVISION				
350-LL000	Base	Less Loader Provisions		**In Base**
350-S3002	7293681	Front Loader Provisions including . . . . . Hydraulic and Subframe, also includes: DP100 - 26 GPM (98 L/min) Twin Flow Open Center System KX012 - Valves 1 and 2 Electric, with Multi-Function Joystick on the Armrest MU014 - 3rd and 4th Mechanical Valve Located on right hand console.		6,155.00
CAB				
365-AF011	7292185	Radio (CD Player, MP3 Compatible), Aerial & Speakers		818.00
125-AE042	7293546	Superluxe Grammar Seat		1,722.00
120-AQ004	7293082	Automatic Climate Control		1,197.00
115-AM015	7292187	Less Cab Suspension		(1,639.00)
145-AL008	7293692	Telescopic Large Side Mirrors		(453.00)
140-AI020	7293077	Standard Cab Roof with Roof Hatch		262.00
140-AI021	7293078	Visio Roof . . . . . Not Compatible with: Automatic Climate Control (AQ004) In Base - Dual Telescopic Large Side Mirrors with Electric De-icing and Adjustment Requires: VG019- 2 Front Double Bulb and 2 Rear Double Bulb Lighting Option AL008- Standard Telescopic Side Mirrors (deduct)		1,524.00

SUBJECT TO AVAILABILITY

5600 LARGE FRAME DELUXE EDITION

Mississippi State Contract Discount: 20%

MASSEY FERGUSON®

(F.O.B. PORT OF ENTRY)

Order Code	Catalog Number	Description	Approx. Weight (lb.)	List Price
REAR WHEEL WEIGHTS				
325-RD002	7293328	2 Sets of 110 LBS (50 KG) weights (4 weights total) . . Mounts Externally to Wheel Only Available on Welded Rims (Non Adjustable)	1102	577.00
325-RD004	7293330	1 Set of 110 LBS (50 KG) and1 Set of . . . . . 440 LBS (200 KG) (4 weights total) Mounts Externally to Wheel Only Available on Welded Rims (Non Adjustable)	1100	865.00
ELECTRICAL				
215-CB002	Base	Engine Block Heater - 110 Volt		**In Base**
215-CB000	7293593	Less Engine Block Heater.		(207.00)
ALTERNATOR				
220-CE020	Base	175 AMP Alternator . . . . . **Not Available with ISOBUS**		**In Base**
220-CE015	7292191	Twin 120 AMP Alternators		205.00
LIGHTING				
205-VF013	7293103	Dual Roof-Mounted Rotating Beacons, Left and Right . Includes SAE SMV sign		502.00
195-VG019	7295102	2 Front Double Bulb & 2 Rear Double Bulb Work Lights. (Required for Visio Roof Cab Option)		284.00

SUBJECT TO AVAILABILITY

5600 LARGE FRAME DELUXE EDITION

Mississippi State Contract Discount: 20%

(F.O.B. PORT OF ENTRY)

Order Code	Catalog Number	Description	Approx. Weight (lb.)	List Price

PIVOTING FRONT FENDERS

155-WE110	Base	Pivoting Front Fenders - Standard Width . . . . . Width depends on tire selection; see Chart Below		**In Base**
155-WE111	7293598	Pivoting Front Fenders - Wide Width . . . . . Width depends on tire selection; see Chart Below		116.00

Fender Size		
Standard	**Wide**	**Tire Sizes**
320 mm	355 mm	320/85R24 (12.4R24) 320/70R24
355 mm	380 mm	340/85R24 (13.6R24) 340/85R28 (13.6R28)
380 mm	410 mm	380/85R28 (14.9R28) 400/80R24 400/80R28 380/85R24 (14.9R24) 380/70R24 380/70R28
410 mm	470 mm	420/70R24 420/70R28 440/65R24 440/65R28
470 mm	520 mm	420/70B24 480/65R24 480/65R28
520 mm	620 mm	480/60R28 520/60R28

REAR FENDERS

255-WD012	Base	Rear Fenders without Extensions, 78.74"(2.00 M) . . .		**In Base**
255-WD013	7293450	Rear Fenders with Extensions, 78.74"(2.00 M)		1,272.00
255-WD017	7293107	Wide Fender -90.55" (2.3 M) with Rear Extension . . .		1,272.00

SUBJECT TO AVAILABILITY

5600 LARGE FRAME DELUXE EDITION

Mississippi State Contract Discount: 20%

MASSEY FERGUSON®

(F.O.B. PORT OF ENTRY)

Order Code	Catalog Number	Description	Approx. Weight (lb.)	List Price
MISCELLANEOUS				
35-EN002	7292064	14:1 Super Creeper Reduction Gear		2,561.00
250-GS001	7293100	Hydraulic Trailer Brakes		785.00
250-GS062	7293551	Pneumatic Trailer Brakes		6,505.00
225-LQ001	7293553	Water Separator (Fuel Filter)		448.00
275-TC005	7294210	French Language OIB		No Charge
275-TC011	7294211	Spanish Language OIB		No Charge
DEALER INSTALLED OPTIONS				
FRONT WEIGHTS				
	5020186M	8 x 55 KG (121 lbs.) Front Weights	968	1,485.00
	5020187M	10 x 55 KG (121 lbs.) Front Weights	1210	1,857.00

SUBJECT TO AVAILABILITY

RESERVED PAGE

SUBJECT TO AVAILABILITY

MASSEY FERGUSON®

MF6600 SERIES

MASSEY FERGUSON®

6614 / 6615 / 6616 SERIES

MID RANGE

6600 CLASSIC EDITION

Mississippi State Contract Discount: 22%

MASSEY FERGUSON®

(F.O.B. PORT OF ENTRY)

CLASSIC EDITION FEATURES

ENGINE
6615/6616
AGCO POWER 4.9L (299 cu in.) 4 Cylinder, Tier 4i Compliant
- e3 SCR Technology
- Air-to-Air Aftercooled, Common Rail Injection, Turbocharged

Electronic Engine Management (EEM) with Dual ERPM Settings
Electronic Controlled Viscous Fan Drive
Dual Element Dry Type Air Cleaner
Vertical Exhaust at Right Front Cab Post
Cooling System: Antifreeze to Minus 30F (-34C)
Fuel Tank Capacity: 61 Gal (223L)
DEF Tank Capacity: 9.2 Gal (35L)

POWERTRAIN
6615: Dyna-4 Transmission
- 16F/16R Semi-Powershift, 4 Ranges with 4 Powershifts Per Range

6616: Dyna-6 Transmission
- 24F/24R Semi-Powershift, 4 Ranges with 6 Powershifts per Range

Multi-Disc Wet Brakes
Power Differential Lock
Independent PTO: 540/1000 RPM, 540 with 6 Spline Shaft, 1000 RPM with 21 Spline Shaft, Exchangeable Shafts
Rear Fender Mounted PTO Shut-Off
Flange Axles

FRONT WHEEL ASSIST AXLE
Power Front Axle (PFA)
- 8 Bolt Pattern: 6615 Dyna-4
- 10 Bolt Pattern: 6616 Dyna-6

Shielded Center Drive Line with Electro-Hydraulic Control & Front Wheel Drive Differential Lock
55 Degree Steering Angle

HYDRAULICS
Closed Center Load Sensing 29 GPM (110 L/Min) Pump
2900 PSI (200 Bar) Maximum Pressure
3 Mechanical Valves – Lever Controlled on Right Hand Console
Hydrostatic Power Steering

HITCH
3 Point Hitch: Category 2/3 Linkage Ball Ends
- 11,400 lbs lift capacity @ 24"
- Active Transport Control
- Lower Link Sensing
- Electronic Draft Control, Electronic Height Control, and Rate of Drop
- Variable Float Telescopic Stabilizers
- Left and Right Side External 3 Point Control

Drawbar: Category 2, Clevis and Drop Pin

ELECTRICAL SYSTEM
175 Amp Alternator
2 – 12V Batteries, 600 CCA Each (SAE)
7 Pin ASAE Rear Trailer Electrical Outlet
Electrical Isolator Switch and Jumpstart Point
110V Engine Block Heater
Ignition with Neutral Start and Key Shutoff

LIGHTING
8 Front Hood Mounted Lights
Four Front Single Bulb Worklights
Two Rear Double Bulb Worklights
Tail Lights, Flashing Warning Lights and Turn Signals

INSTRUMENTS
Tachometer: Digital and Analog
PTO Speed: Digital
Ground Speed Display: Digital
Fuel Level, DEF Level, and Coolant Temp Gauges
Warning/Information Lights

OPERATOR AREA
6 Post Cab
Transmission Control T-Handle on Right Hand Console
Adjustable Steering Column
Front Sun Visor
Air Conditioning and Heater
Air Suspended Seat - Manual Adjustment
Front and Rear Windshield Wiper/Washer
Dual Large Telescoping Outside Rear View Mirrors
Single Inside Rear View Mirror
2 Audio Speakers and Antenna
3 Pin 12V Power Outlets
12V Cigarette Lighter Style Power Outlet

WHEELS AND TIRES
Rear 460/85R38 R1W Single Wheels
Front 380/85R28 R1W Single Waffle Wheels

OTHER STANDARD FEATURES
AGCOMMAND Ready with Antenna, Bracket, and Harness (To Complete, See Technology Section)
Lockable Tool Box
SMV Sign
Molded Rear Fenders
English Literature

SUBJECT TO AVAILABILITY

MF6600 models with Dyna-6 Transmission can not be sold in Nebraska

6600 CLASSIC EDITION

Mississippi State Contract Discount: 22%

(F.O.B. PORT OF ENTRY)

Order Code	Catalog Number	Description	Factory Code	Approx. Weight (lb.)	List Price

ONE *ORDER CODE* FROM EACH GROUP MUST BE SPECIFIED. (Unless In Base Option is desired)

BASE MACHINE

DYNA-4 EDITIONS

MF6615~D4~ES~01	7292200	Massey 6615 Classic Tractor 110 PTO HP			114,355.00

DYNA-6 EDITIONS

MF6616~D6~ES~01	7292202	Massey 6616 Classic Tractor 125 PTO HP			125,656.00

TRANSMISSION OPTIONS FOR DYNA-4 EDITIONS

25-EA637	Base	4x4 Dyna-4 AUTODRIVE Transmission with . . . . . 16F/16R gears. 25 MPH (40 KPH)			**In Base**

TRANSMISSION OPTIONS FOR DYNA-6 EDITIONS

25-EA655	Base	6x4 Dyna-6 AUTODRIVE Transmission with . . . . . 24F/24R gears. 25 MPH (40 KPH)			**In Base**
25-G1063	7293524	6X4 Dyna-6 AUTODRIVE Transmission with . . . . 24F/24R gears. 31 MPH (50 KPH) . Also includes: High Pressure Brakes. (Requires NA032 Suspended Front Axle)			1,585.00

EQUIPMENT REQUIRED FOR NORTH AMERICA

	7293488	Instructional Seat			472.00
	7293489	Front Weight Carrier . . . . . (Removed when factory installed front 3-Point Hitch is selected.)			304.00

MARKETING PACKAGE

	MKT0325	Upgrade Package Includes: . . . . . Short Bar Rear Axle Air Suspended Seat - Automatic Adjustment Radio, AM/FM, MP3 Compatible Front Loader Provision - Mech Loader Control			7,706.00

SUBJECT TO AVAILABILITY

6600 CLASSIC EDITION

Mississippi State Contract Discount: 22%

MASSEY FERGUSON®

(F.O.B. PORT OF ENTRY)

Order Code	Catalog Number	Description	Factory Code	Approx. Weight (lb.)	List Price
AUXILIARY HYDRAULIC FLOW					
370-DP110	Base	29 gpm (110 L/min) Closed Center Load Sensing (CCLS) System (Requires Auxiliary Valve 1 & 2- KX010 In Base Option)			**In Base**
370-DP057	7293577*	15 gpm (57 L/min) Open Center System . . . . . . (Requires Auxiliary Valve 1 & 2, KX005 or KX006)			(4,559.00)
370-DP100	7293578*	26 gpm (100L/min) Twin Flow Open Center System . . (Requires Auxiliary Valve 1 & 2, KX005 or KX006)			(3,571.00)
AUXILIARY VALVE 1 & 2					
50-KX010	Base	2 Mechanical Controlled Valves, ... Located on right hand console. (1st and 2nd - Flow Dividing, Kickout, Zero Leak, Float) (Requires DP110)			**In Base**
50-KX005	7293581	2 Mechanical Controlled Valves, ... Located on right hand console. (1st - Single Acting/Double Acting, Flow Dividing, Kickout and 2nd - Double Acting, Kickout, Float) (Requires DP057 or DP100)			No Charge
50-KX006	7293582	2 Mechanical Controlled Valves, ... Located on right hand console. (1st - Double Acting, Flow Dividing, Kickout, Zero Leak and 2nd - Single Acting/Double Acting, Zero Leak, Notch Float) (Requires DP057 or DP100)			No Charge
AUXILIARY VALVE 3 & 4					
55-MU003	Base	3rd Mechanical Valve Only, ... Located on right hand console. (Kickout, Zero Leak, Flow Dividing, Float) (Requires DP110) (Requires KX010)			**In Base**
55-MU000	7293669	Less 3rd and 4th Mechanical Valve . . . . . . (Requires KX010 or KX005)			(1,136.00)
55-MU002	7293586	3rd Mechanical Valve Only, ... Located on right hand console. (Single Acting/Double Acting) (Requires DP057 or DP100) (Requires KX006)			No Charge
55-MU011	7293587*	3rd and 4th Mechanical Valve, ... Located on right hand console. (3rd - Single Acting/Double Acting and 4th - Double Acting, Kickout, Float) (Requires DP100) (Requires KX006)			1,136.00

***IF 4TH VALVE REQUIRED FOR CCLS SYSTEM (DP110 - 29 GPM), ORDER 4378484M11 FIELD INSTALLED KIT FROM PARTS**

Oil Catch

380-GB020	In Base	With Oil Catch			**In Base**
380-GB000	7293664	Less Oil Catch. . . . . . (Required for Dyna-4 when DP057 or DP100 are ordered)			No Charge

SUBJECT TO AVAILABILITY

6600 CLASSIC EDITION

MASSEY FERGUSON®

Mississippi State Contract Discount: 22%

(F.O.B. PORT OF ENTRY)

Order Code	Catalog Number	Description	Factory Code	Approx. Weight (lb.)	List Price
FRONT AXLE					
For 6615 Dyna-4					
65-NA030	Base	Non-Suspended Power Front Axle . . . . . (Not available with 31 MPH (50 KPH) Dyna-6 Transmission)			**In Base**
65-NA032	7293408	Suspended Power Front Axle . . . . . (Required with 31 MPH (50 KPH) Dyna-6 Transmission)			6,898.00
For 6616 Dyna-6					
65-NA030	Base	Non-Suspended Power Front Axle . . . . . (Not available with 31 MPH (50 KPH) Dyna-6 Transmission)			**In Base**
65-NA032	7293347	Suspended Power Front Axle . . . . . (Required with 31 MPH (50 KPH) Transmission)			6,898.00
REAR AXLE					
60-EE400	Base	Flange Axle			**In Base**
60-EE402	7293024	Short Bar Rear Axle, 80 in. (2028mm) Length, ... 3.23 in (82mm) Diameter			604.00
60-EE404	7293025	Long Bar Rear Axle, 105 in (2672mm) Length, ... 3.23 in (82mm) Diameter (Requires Extremity Lights VE019)			1,340.00
REAR 3-POINT HITCH					
95-GC009	Base	Category 2/3 Telescopic Ball End Links.			**In Base**
95-GC022	7293572	Category 3 Hook End Links and Cat 2/3 Balls and Cones			No Charge
REAR THREE POINT STABILIZERS					
165-YG001	Base	Variable Float Telescopic Stabilizers			**In Base**
165-YG006	7293403*	Rub Block Stabilizers (Requires GC009)			640.00
165-YG009	7293574*	Automatic Stabilizers . . . . . (Requires GC022 or GC026 Lower Links)			328.00
		***Available with Dyna-6 Transmissions Only**			
INSTRUMENT PANEL / CONTROL CENTER DISPLAY (CCD)					
175-BA005	Base	Analog and Digital Instrument Panel w/o Radar or Slip . Control. No Control Center Display (CCD)			**In Base**
175-BA003	7293084	Analog and Digital Instrument Panel with Radar . . . . (For Actual Ground Speed) and Slip Control. (For No Control Center Display (CCD))			808.00

SUBJECT TO AVAILABILITY

6600 CLASSIC EDITION

Mississippi State Contract Discount: 22%

MASSEY FERGUSON®

(F.O.B. PORT OF ENTRY)

Order Code	Catalog Number	Description	Factory Code	Approx. Weight (lb.)	List Price

TIRES for 6615 Dyna-4

TIRE BRAND SELECTION

70-Blank	7294212	Factory Brand Choice			No Charge
70-T0001	7294195	Michelin Brand Required			1,552.00
70-T0007	7294197	Firestone Brand Required			1,158.00
70-T0010	7294198	Trelleborg Brand Required			1,158.00

FRONT AND REAR TIRES

FLANGE AXLE*

Rear: Single Pressed Steel Manual Adjust - Set of 2
Front: Waffle Wheel

75-Base	7292864 7294786	Rear: 460/85R38 R1W (18.4R38) (MI, FI, TR) Front: 380/85R28 R1W (14.9R28) (MI, FI, TR)			**In Base**
75-W1309	7292865 7293763	Rear: 520/85R38 R1W (MI, FI, TR) Front: 420/85R28 R1W (MI, FI, TR)			1,357.00
75-W1662	7292861 7293760	Rear: 460/85R30 R1W (MI, FI) Front: 340/85R24 R1W (MI, FI)			(2,036.00)
75-W1663	7292862 7293761	Rear: 460/85R34 R1W (MI, FI, TR) Front: 340/85R28 R1W (MI, FI, TR)			(1,692.00)
75-W1664	7292863 7293761	Rear: 420/85R38 R1W (MI, FI, TR) Front: 340/85R28 R1W (MI, FI, TR)			(1,644.00)

Rear: Single Welded Pressed Steel - Set of 2
Front: Fixed Welded Steel Rim

75-W1476	7292871 7293767	Rear: 480/80R34 Industrial (Nokian Industrial) Front: 400/80R24 Industrial(Nokian Industrial)			5,810.00
75-W1478	7292873 7293769	Rear: 540/80R38 (Nokian Industrial) Front: 440/80R28 (Nokian Industrial)			10,060.00
75-W1286	7292858 7293757	Rear: 540/65R38 R1W (MI, FI, TR) Front: 440/65R28 R1W (MI, FI, TR)			681.00
75-W1511	7292872 7293768	Rear: 480/80R38 Industrial (Nokian Industrial) Front: 400/80R28 Industrial (Nokian Industrial)			7,873.00
75-W1257	7292859 7294785	Rear: 600/65R38 R1W (MI, FI, TR) Front: 480/65R28 R1W (MI, FI, TR)			1,369.00
75-W1258	7292860 7293759	Rear: 650/65R38 R1W (MI, FI, TR) Front: 540/65R28 R1W (MI, FI, TR)			4,246.00

BAR AXLES- SHORT AND LONG

Rear: Single Welded Pressed Steel - Set of 2
Front: Fixed Welded Steel Rim

75-W1667	7294903B5 7293767	Rear: 480/80R34 Industrial (Nokian Industrial) Front: 400/80R24 Industrial (Nokian Industrial)			6,249.00
75-W1670	7294899B5 7293757	Rear: 540/65R38 R1W (MI, FI, TR) Front: 440/65R28 R1W (MI, FI, TR)			737.00
75-W1572	7294894B5 7294785	Rear: 600/65R38 R1W (MI, FI, TR) Front: 480/65R28 R1W (MI, FI, TR)			1,301.00
75-W1673	7294905B5 7293769	Rear: 540/80R38 (Nokian Industrial) Front: 440/80R28 (Nokian Industrial)			10,070.00
75-W1262	7294895B5 7293759	Rear: 650/65R38 R1W (MI, FI, TR) Front: 540/65R28 R1W (MI, FI, TR)			4,255.00
75-W1672	7294904B5 7293768	Rear: 480/80R38 Industrial (Nokian Industrial) Front: 400/80R28 Industrial (Nokian Industrial)			7,627.00

*** FIRESTONE TREAD TYPE IS R1**

SUBJECT TO AVAILABILITY

(F.O.B. PORT OF ENTRY)

TIRES for 6615 Dyna-4

FRONT AND REAR TIRES - CONTINUED

Order Code	Catalog Number	Description	Factory Code	Approx. Weight (lb.)	List Price
		BAR AXLES- SHORT AND LONG			
		Rear: Single Semi Dished Cast Centers- Set of 2			
		Front: Waffle Wheel			
75-W1300	7294897B5 7294786	Rear: 460/85R38 R1W (18.4R38) (MI, FI, TR) Front: 380/85R28 R1W (14.9R28) (MI, FI, TR)			1,394.00
75-W1318	7294883B5 7293764	Rear: 380/90R46 R1W* (MI, FI) Front: 380/85R30 R1W* (MI, FI)			2,782.00
75-W1409	7294884B5 7293764	Rear: 420/80R46 R1W* (MI, FI) Front: 380/85R30 R1W* (MI, FI)			3,458.00
75-W1388	7294884B5 7293763	Rear: 420/80R46 R1W (MI) Front: 420/85R28 R1W (MI)			4,079.00
75-W1377	7294882B5 7293764	Rear: 480/80R42 R1W* (MI, TR, FI) Front: 380/85R30 R1W* (MI, TR, FI)			2,778.00
75-W1384	7294882B5 7293763	Rear: 480/80R42 R1W (MI, TR) Front: 420/85R28 R1W (MI, TR)			3,399.00
75-W1533	7294893B5 7293763	Rear: 520/85R38 R1W (MI, FI, TR) Front: 420/85R28 R1W (MI, FI, TR)			4,056.00
		BAR AXLES- LONG			
		Rear: Dual Cast Inner / Steel Outer - Set of 4			
		Front: Waffle Wheel			
75-W1374	7294898B5 7294786	Duals: 460/85R38 R1W (18.4R38) (MI, TR) Front: 380/85R28 R1W (14.9R28) (MI, TR)			8,358.00
75-W1379	7294887B5 7293764	Duals: 380/90R46 R1W (MI) Front: 380/85R30 R1W (MI)			10,012.00
75-W1410	7294888B5 7293764	Duals: 420/80R46 R1W* (MI, FI) Front: 380/85R30 R1W* (MI, FI)			10,946.00
75-W1471	7294888B5 7293763	Duals: 420/80R46 R1W (MI) Front: 420/85R28 R1W (MI)			11,567.00
75-W1380	7294886B5 7293764	Duals: 480/80R42 R1W* (MI, TR) Front: 380/85R30 R1W* (MI, TR)			9,304.00
75-W1386	7294886B5 7293763	Duals: 480/80R42 R1W (MI, TR) Front: 420/85R28 R1W (MI, TR)			9,925.00
75-W1658	7294896B5 7293763	Duals: 520/85R38 R1W (MI) Front: 420/85R28 R1W (MI)			10,244.00
		BAR AXLES- LONG			
		Rear: Dual Cast Inner / Cast Outer - Set of 4			
		Front: Waffle Wheel			
75-W1408	7294925B5 7293764	Duals: 380/90R46 R1W (MI) Front: 380/85R30 R1W (MI)			TBA
75-W1412	7294926B5 7293764	Duals: 420/80R46 R1W* (MI, FI) Front: 380/85R30 R1W* (MI, FI)			TBA
75-W1406	7294926B5 7293763	Duals: 420/80R46 R1W (MI) Front: 420/85R28 R1W (MI)			TBA
75-W1407	7294927B5 7293764	Duals: 480/80R42 R1W* (MI, TR) Front: 380/85R30 R1W* (MI, TR)			TBA
75-W1405	7294927B5 7293763	Duals: 480/80R42 R1W (MI, TR) Front: 420/85R28 R1W (MI, TR)			TBA

*** FIRESTONE TREAD TYPE IS R1**

SUBJECT TO AVAILABILITY

(F.O.B. PORT OF ENTRY)

Order Code	Catalog Number	Description	Factory Code	Approx. Weight (lb.)	List Price

TIRES 6616 Dyna-6

FRONT AND REAR TIRES

		FLANGE AXLE*			
		Rear: Single Pressed Steel Manual Adjust - Set of 2			
		Front: Waffle Wheel			
75-Base	7292864 7293762B2	Rear: 460/85R38 R1W (18.4R38) (MI, FI, TR) . . . . Front: 380/85R28 R1W (14.9R28) (MI, FI, TR)			**In Base**
75-W1309	7292865 7294762B2	Rear: 520/85R38 R1W (MI, FI, TR) . . . . . . Front: 420/85R28 R1W (MI, FI, TR)			1,357.00
		Rear: Single Welded Pressed Steel - Set of 2			
		Front: Fixed Welded Steel Rim			
75-W1478	7292873 7294791B2	Rear: 540/80R38 (Nokian Industrial) . . . . . . Front: 440/80R28 (Nokian Industrial)			10,060.00
75-W1286	7292858 7294784B2	Rear: 540/65R38 R1W (MI, FI, TR) . . . . . . Front: 440/65R28 R1W (MI, FI, TR)			681.00
75-W1257	7292859 7293758B2	Rear: 600/65R38 R1W (MI, FI, TR) . . . . . . Front: 480/65R28 R1W (MI, FI, TR)			1,369.00
75-W1258	7292860 7294783B2	Rear: 650/65R38 R1W (MI, FI, TR) . . . . . . Front: 540/65R28 R1W (MI, FI, TR)			4,246.00
		BAR AXLES- SHORT AND LONG			
		Rear: Single Welded Pressed Steel - Set of 2			
		Front: Fixed Welded Steel Rim			
75-W1670	7294899B5 7294784B2	Rear: 540/65R38 R1W (MI, FI, TR) . . . . . . Front: 440/65R28 R1W (MI, FI, TR)			737.00
75-W1572	7294894B5 7293758B2	Rear: 600/65R38 R1W (MI, FI, TR) . . . . . . Front: 480/65R28 R1W (MI, FI, TR)			1,301.00
75-W1673	7294905B5 7294791B2	Rear: 540/80R38 (Nokian Industrial) . . . . . . Front: 440/80R28 (Nokian Industrial)			10,070.00
75-W1262	7294895B5 7294783B2	Rear: 650/65R38 R1W (MI, FI, TR) . . . . . . Front: 540/65R28 R1W (MI, FI, TR)			4,255.00

*** FIRESTONE TREAD TYPE IS R1**

SUBJECT TO AVAILABILITY

(F.O.B. PORT OF ENTRY)

Order Code	Catalog Number	Description	Factory Code	Approx. Weight (lb.)	List Price

TIRES 6616 Dyna-6

FRONT AND REAR TIRES - CONTINUED

BAR AXLES- SHORT AND LONG
Rear: Single Semi Dished Cast Centers- Set of 2
Front: Waffle Wheel

75-W1300	7294897B5 7293762B2	Rear: 460/85R38 R1W (18.4R38) (MI, FI, TR) . . . . . Front: 380/85R28 R1W (14.9R28) (14.9R28) (MI, FI, TR)	1,394.00
75-W1394	7294885B5 7294769B2	Rear: 320/90R50 R1W (MI) . . . . . . Front: 320/85R34 R1W (MI)	3,932.00
75-W1548	7294883B5 7294769B2	Rear: 380/90R46 R1W (MI) . . . . . . Front: 320/85R34 R1W (MI)	3,509.00
75-W1318	7294883B5 7294765B2	Rear: 380/90R46 R1W* (MI, FI) . . . . . . Front: 380/85R30 R1W* (MI, FI)	2,782.00
75-W1624	7294884B5 7294769B2	Rear: 420/80R46 R1W (MI) . . . . . . Front: 320/85R34 R1W (MI)	4,185.00
75-W1409	7294884B5 7294765B2	Rear: 420/80R46 R1W* (MI, FI) . . . . . . Front: 380/85R30 R1W* (MI, FI)	3,458.00
75-W1388	7294884B5 7294762B2	Rear: 420/80R46 R1W (MI) . . . . . . Front: 420/85R28 R1W (MI)	4,079.00
75-W1620	7294882B5 7294769B2	Rear: 480/80R42 R1W (MI) . . . . . . Front: 320/85R34 R1W (MI)	3,505.00
75-W1377	7294882B5 7294765B2	Rear: 480/80R42 R1W* (MI, TR, FI) . . . . . . Front: 380/85R30 R1W* (MI, TR, FI)	2,778.00
75-W1384	7294882B5 7294762B2	Rear: 480/80R42 R1W (MI, TR) . . . . . . Front: 420/85R28 R1W (MI, TR)	3,399.00
75-W1533	7294893B5 7294762B2	Rear: 520/85R38 R1W (MI, FI, TR) . . . . . . Front: 420/85R28 R1W (MI, FI, TR)	4,056.00

SUBJECT TO AVAILABILITY

(F.O.B. PORT OF ENTRY)

Order Code	Catalog Number	Description	Factory Code	Approx. Weight (lb.)	List Price
		TIRES 6616 Dyna-6			
		BAR AXLES- LONG			
		Rear: Dual Cast Inner / Steel Outer - Set of 4			
		Front: Waffle Wheel			
75-W1374	7294898B5	Duals: 460/85R38 R1W (18.4R38) (MI, TR)			8,358.00
	7293762B2	Front: 380/85R28 R1W (14.9R28) (MI, TR)			
75-W1395	7294889B5	Duals: 320/90R50 R1W (MI)			10,985.00
	7294769B2	Front: 320/85R34 R1W (MI)			
75-W1549	7294887B5	Duals: 380/90R46 R1W (MI)			10,739.00
	7294769B2	Front: 320/85R34 R1W (MI)			
75-W1379	7294887B5	Duals: 380/90R46 R1W (MI)			10,012.00
	7294765B2	Front: 380/85R30 R1W (MI)			
75-W1625	7294888B5	Duals: 420/80R46 R1W (MI)			11,673.00
	7294769B2	Front: 320/85R34 R1W (MI)			
75-W1410	7294888B5	Duals: 420/80R46 R1W* (MI, FI)			10,946.00
	7294765B2	Front: 380/85R30 R1W* (MI, FI)			
75-W1471	7294888B5	Duals: 420/80R46 R1W (MI)			11,567.00
	7294762B2	Front: 420/85R28 R1W (MI)			
75-W1621	7294886B5	Duals: 480/80R42 R1W (MI)			10,031.00
	7294769B2	Front: 320/85R34 R1W (MI)			
75-W1380	7294886B5	Duals: 480/80R42 R1W* (MI, TR)			9,304.00
	7294765B2	Front: 380/85R30 R1W* (MI, TR)			
75-W1386	7294886B5	Duals: 480/80R42 R1W (MI, TR)			9,925.00
	7294762B2	Front: 420/85R28 R1W (MI, TR)			
75-W1658	7294896B5	Duals: 520/85R38 R1W (MI)			10,244.00
	7294762B2	Front: 420/85R28 R1W (MI)			
		BAR AXLES- LONG			
		Rear: Dual Cast Inner / Cast Outer - Set of 4			
		Front: Waffle Wheel			
75-W1408	7294925B5	Duals: 380/90R46 R1W (MI)			TBA
	7293764	Front: 380/85R30 R1W (MI)			
75-W1412	7294926B5	Duals: 420/80R46 R1W* (MI, FI)			TBA
	7293764	Front: 380/85R30 R1W* (MI, FI)			
75-W1406	7294926B5	Duals: 420/80R46 R1W (MI)			TBA
	7293763	Front: 420/85R28 R1W (MI)			
75-W1407	7294927B5	Duals: 480/80R42 R1W* (MI, TR)			TBA
	7293764	Front: 380/85R30 R1W* (MI, TR)			
75-W1405	7294927B5	Duals: 480/80R42 R1W (MI, TR)			TBA
	7293763	Front: 420/85R28 R1W (MI, TR)			

*** FIRESTONE TREAD TYPE IS R1**

SUBJECT TO AVAILABILITY

6600 CLASSIC EDITION

Mississippi State Contract Discount: 22%

(F.O.B. PORT OF ENTRY)

Order Code	Catalog Number	Description	Factory Code	Approx. Weight (lb.)	List Price
PTO					
100-LC001	Base	540 RPM 6 Spline and1000 RPM 21 Spline Exchangeable Shaft with No Economy			**In Base**
100-LC002	7293068	Standard and Economy PTO Drive -2000 & 1550. Engine RPM. Exchangeable Shaft PTO- 540 RPM 6 Spline + 1000 RPM 21 Spline			917.00
FRONT HITCH					
230-FA000	Base	Less Front Hitch			**In Base**
230-F1132	7293594	2800 kg. (6172 lbs.) Front Linkage with 1 Set of Hydraulic Couplers			6,190.00
230-F1134	7293595	2800 kg. (6172 lbs.) Front Linkage with 2 sets of Hydraulic Couplers			6,573.00
230-F1135	7293596	2800 kg. (6172 lbs.) Front Linkage with 1 set of Hydraulic Couplers with Pressure Drain (Requires In Base Auxiliary Hydraulic Flow)			6,338.00
LOADER PROVISION					
350-LL000	Base	Less Loader Provisions.			In **Base**
350-LL001	7293445	Front Loader Provision - Mech Loader Control, Including Hydraulics and Subframe (Not recommended with 15 gpm (57 L/min) Open Center System- DP057)			6,155.00
CAB					
365-AF009	7294248	Radio, AM/FM, MP3 Compatible			602.00
125-AE027	7293430	Air Suspended Seat - Automatic Adjustment			345.00
115-AM084	7293559	Mechanical Cab Suspension			1,639.00
140-AI020	7293077	Standard Cab Roof with Roof Hatch			262.00
140-E1022	7293078	Visio roof			1,524.00

SUBJECT TO AVAILABILITY

6600 CLASSIC EDITION

Mississippi State Contract Discount: 22%

MASSEY FERGUSON®

(F.O.B. PORT OF ENTRY)

Order Code	Catalog Number	Description	Factory Code	Approx. Weight (lb.)	List Price
FRONT WEIGHTS					
285-YA112	7293487	121 lbs. (55 kg.) Front Weights, Set of 12 . . . . . with Hardware - total Weight 1,455 lbs. (660 kg.)			2,228.00
REAR WHEEL WEIGHTS					
325-RD040	7294192*	551 lbs. (250 kg.) Weights, Set of 2 . . . . . Mounts Externally to Wheel		1102	1,791.00
325-RD041	7294200*	551 lbs. (250 kg.) Weights, Set of 4 . . . . . Mounts Externally to Wheel		2204	3,582.00
		***NOT COMPATIBLE WITH MANUAL ADJUST FLANGE AXLE RIMS**			
BELLY AND HITCH WEIGHTS					
245-YD001	7293374	1 Belly Weight - 584 lbs. (265 kg.) . . . . . (For use **WITHOUT** Front 3-Point Hitch)		584	1,447.00
245-YD001	7293375	1 Belly Weight - 397 lbs. (180 kg.) . . . . . (For use **WITH** Front 3-Point Hitch)		430	1,064.00
345-YB003	7294119	1873 lbs. (850 kg.) 3-Point Hitch Weight . . . . . (For use with Front 3-Point Hitch or Rear 3-Point Hitch without Quick Hitch Only if Rear Links are Hooks Style GC022)		1984	3,307.00
ELECTRICAL					
215-CB002	Base	Engine Block Heater - 110 Volt			**In Base**
215-CB000	7293593	Less Engine Block Heater.			(207.00)
ALTERNATOR					
220-CE020	Base	175 AMP Alternator. . . . . (Not Available with ISOBUS.)			**In Base**
220-CE019	7293533	Twin 120 AMP Alternators.			380.00
LIGHTING					
205-VF013	7293103	Dual Roof-Mounted Rotating Beacons, Left and Right . (Includes SAE SMV sign)		1102	502.00
195-VG078	7295103	2 Xenon and 2 Single Bulb Front Worklights, ... 2 Xenon Rear Worklights (Not Compatible with Visio roof (E1022))			3,293.00
360-VE019	7293476	Extremity Lighting . . . . . (Required with Long Bar Axle) (Not Compatible with Flange Axle)			734.00
190-VK004	7293597	Worklights on Handrails and Rear Fenders			522.00

SUBJECT TO AVAILABILITY

6600 CLASSIC EDITION

Mississippi State Contract Discount: 22%

(F.O.B. PORT OF ENTRY)

Order Code	Catalog Number	Description	Factory Code	Approx. Weight (lb.)	List Price

PIVOTING FRONT FENDERS

155-WE000	Base	Less Pivoting Front Fenders			**In Base**
155-WE110	7294204	Pivoting Front Fenders - Standard Width . . . . . Width depends on tire selection; see Chart Below			1,633.00

Fender Size		
Standard	**Wide**	**Tire Sizes**
12.6" (320 mm)	13.9" (355 mm)	320/85R34 (12.4R34)
13.9" (355 mm)	14.9" (380 mm)	340/85R24 (13.6R24) 340/85R28 (13.6R28)
14.9" (380 mm)	16.1" (410 mm)	380/85R28 (14.9R28) 380/85R30 (14.9R30) 400/80R24 400/80R28
16.1" (410 mm)	18.5" (470 mm)	420/85R28 (16.9R28) 440/65R28
18.5" (470 mm)	20.4" (520 mm)	440/80R28 480/65R28
20.4" (520 mm)	24.4" (620 mm)	540/65R28

REAR FENDERS

255-WD012	Base	Rear Fenders without Extensions, 78.74"(2.00 M) . . .			**In Base**
255-WD017	7293107	Wide Fender -90.55" (2.3 M) with Rear Extension . . .			1,272.00
255-WD020	7293109	Extra Wide Fender -100.4" (2.55 M) . . . . . with Rear Extension			1,421.00

SUBJECT TO AVAILABILITY

6600 CLASSIC EDITION

Mississippi State Contract Discount: 22%

MASSEY FERGUSON®

(F.O.B. PORT OF ENTRY)

Order Code	Catalog Number	Description	Factory Code	Approx. Weight (lb.)	List Price
MISCELLANEOUS					
35-EN001	7293092	Creeper Gear (4:1 Reduction)			2,297.00
35-EN002	7293402	14:1 Super Creeper Reduction Gear			2,822.00
250-GS001	7293100	Hydraulic Trailer Brakes			785.00
250-GS062	7293551	Pneumatic Trailer Brakes			6,505.00
250-GS067	7293552	Pneumatic & Hydraulic Trailer Brakes			7,289.00
225-LQ001	7293553	Water Separator (Fuel Filter)			448.00
275-TC005	7294210	French Language OIB			No Charge
275-TC011	7294211	Spanish Language OIB			No Charge

DEALER INSTALLED OPTIONS

FRONT WEIGHTS

5020186M	8 x 55 KG (121 lbs.) Front Weights		968	1,485.00
5020187M	10 x 55 KG (121 lbs.) Front Weights		1210	1,857.00
5020188M	12 x 55 KG (121 lbs.) Front Weights		1452	2,228.00
5020189M	14 x 55 KG (121 lbs.) Front Weights		1694	2,600.00

SUBJECT TO AVAILABILITY

6600 DELUXE EDITION

Mississippi State Contract Discount: 22%

(F.O.B. PORT OF ENTRY)

DELUXE EDITION FEATURES

ENGINE
6614/6615/6616

AGCO POWER 4.9L (299 cu in.) 4 Cylinder, Tier 4i Compliant
- e3 SCR Technology
- Air-to-Air Aftercooled, Common Rail Injection, Turbocharged

Electronic Engine Management (EEM) with Dual ERPM Settings
Electronic Controlled Viscous Fan Drive
Dual Element Dry Type Air Cleaner
Vertical Exhaust at Right Front Cab Post
Cooling System: Antifreeze to Minus 30F (-34°C)
Fuel Tank Capacity: 61 Gal (223L)
DEF Tank Capacity: 9.2 Gal (35L)

POWERTRAIN
6614/6615/6616: DYNA-VT
- Continuously Variable Transmission, 60 ft/h to 25 MPH (18.2 Meters/h to 40 KPH)
- Dynamic Tractor Management (DTM) with Two Programmable Cruise Speeds
- Short Bar Rear Axle, 90 In. (2277mm) Long, 3.74 in. (95mm) Diameter

6616: DYNA-6 TRANSMISSION
- 24F/24R Semi-Powershift, 4 Ranges with 6 Powershifts per Range
- Dynamic Tractor Management (DTM) with Two Programmable Cruise Speeds
- Short Bar Rear Axle, 80 In. (2028mm) Long, 3.23 In (82mm) Diameter

Multi-Disc Wet Brakes
Power Differential Lock
Independent PTO:
DYNA-VT:
540/540E/1000 RPM Flanged Shaft, 540 with 6 Spline and 1000 with 21 Spline
DYNA-6: 540/540E/1000/1000E Exchangeable Shaft, 540 with 6 Spline and 1000 with 21 Spline with Electric Control
Rear Fender Mounted PTO Shut-Off

FRONT WHEEL ASSIST AXLE
Pivoting Front Fenders
Power Front Axle (PFA)
- 8 Bolt Pattern: 6614 Dyna-VT
- 10 Bolt Pattern: 6616 Dyna-6

Suspended Front Axle
Shielded Center Drive Line with Electro-Hydraulic Control & Front Wheel Drive Differential Lock
55 Degree Steering Angle

HYDRAULICS
Power Beyond Couplers
Closed Center Load Sensing 29 gpm (110 L/Min) Pump
2900 PSI (200 Bar) Maximum Pressure
2 Electric Valves - Fingertip Controlled on Armrest, 2 Mechanical Valves – Lever Controlled on Right Hand Console
Fast Steering

HITCH
3-Point Hitch: Category 2/3 Linkage Ball Ends
- 11,400 lbs lift capacity @ 24"
- Lower Link Sensing
- Electronic Draft Control, Electronic Height Control, and Rate of Drop
- Variable Float Telescopic Stabilizers
- Left and Right Side External 3 Point Control

ELECTRICAL SYSTEM
2 – 120 Amp Alternators
2 – 12V Batteries, 600 CCA Each (SAE)
7 Pin ASAE Rear Trailer Electrical Outlet
Electrical Isolator Switch and Jumpstart Point
110V Engine Block Heater
Ignition with Neutral Start and Key Shutoff

LIGHTING
8 Front Hood Mounted Lights
Four Front Single Bulb Worklights
Two Rear Double Bulb Worklights
Two Field Lights on Hand Rails and Rear Fenders with Tail Lights, Flashing Warning Lights, and Turn Signals

INSTRUMENTS
Control Center Display (CCD)
- Video Input
- Electric Valve Control
- ISOBUS Compliant

Radar with Slip Control
Tachometer: Digital and Analog
PTO Speed: Digital
Ground Speed Display: Digital
Fuel Level, DEF Level, and Coolant Temp Gauges
Warning/Information Lights

OPERATOR AREA
6 Post Cab
Mechanical Cab Suspension
Transmission Control T-Handle on Armrest
Adjustable Steering Column
Front Sun Visor
Air Conditioning and Heater
Air Suspended Seat - Automatic Adjustment
Front and Rear Windshield Wiper/Washer
Dual Large Telescoping Outside Rear View Mirrors
Single Inside Rear View Mirror
Radio with AM/FM/CD/MP3/Bluetooth and 2 Audio Speakers and Antenna
3 Pin 12V Power Outlet
12V Cigarette Lighter Style Power Outlet
ISO 11783 9-Pin in Cab Connector
ISO 11786 7-Pin in Cab Connector

WHEELS AND TIRES
Rear 460/85R38 R1W Single Wheels
Front 380/85R28 R1W Single Waffle Wheels

OTHER STANDARD FEATURES
Auto-Steer Ready
AGCOMMAND Ready with Antenna, Bracket, and Harness (To Complete, See Technology Section)
Lockable Tool Box
SMV Sign
Molded Rear Fenders
English Literature

SUBJECT TO AVAILABILITY

MF6600 models with Dyna-6 Transmission can not be sold in Nebraska

6600 DELUXE EDITION

Mississippi State Contract Discount: 22%

MASSEY FERGUSON®

(F.O.B. PORT OF ENTRY)

Order Code	Catalog Number	Description	Factory Code	Approx. Weight (lb.)	List Price

ONE *ORDER CODE* FROM EACH GROUP MUST BE SPECIFIED. (Unless In Base Option is desired)

BASE MACHINE

DYNA-6 EDITIONS

MF6616~D6~EF~01	7292204	Massey 6616 Deluxe Tractor 125 PTO HP			150,017.00

DYNA-VT EDITIONS

MF6614~DV~EF~01	7292207	Massey 6614 Deluxe Tractor 100 PTO HP			146,429.00
MF6615~DV~EF~01	7292208	Massey 6615 Deluxe Tractor 110 PTO HP			152,320.00
MF6616~DV~EF~01	7292209	Massey 6616 Deluxe Tractor 120 PTO HP			158,212.00

TRANSMISSION OPTIONS FOR DYNA-6 EDITIONS

25-EA655	Base	6x4 Dyna-6 AUTODRIVE Transmission with . . . . . 24F/24R gears. 25 MPH (40 KPH)			**In Base**
25-G1063	7293524	6X4 Dyna-6 AUTODRIVE Transmission with . . . . 24F/24R gears. 31 MPH (50 KPH) . Also includes: High Pressure Brakes. (Not Compatible with NA030 Power Front Axle)			1,585.00

TRANSMISSION OPTIONS FOR DYNA-VT EDITIONS

25-EA621	Base	Dyna-VT Transmission - 25 MPH (40 KPH)			**In Base**
25-EA622	7293525	Dyna-VT Transmission - 31 MPH (50 KPH) . . . . . (Not Compatible with NA030 Power Front Axle)			775.00

EQUIPMENT REQUIRED FOR NORTH AMERICA

	7293488	Instructional Seat			472.00
	7293489	Front Weight Carrier . . . . . (Removed when factory installed front 3-Point Hitch is selected.)			304.00

MARKETING PACKAGE

	MKT0326	Upgrade Package Includes: . . . . . Superluxe Grammar Seat Automatic Climate Control Hydraulic Cab Suspension			5,829.00

SUBJECT TO AVAILABILITY

6600 DELUXE EDITION

Mississippi State Contract Discount: 22%

(F.O.B. PORT OF ENTRY)

Order Code	Catalog Number	Description	Factory Code	Approx. Weight (lb.)	List Price
AUXILIARY VALVE 1 & 2					
50-KX011	Base	Valves 1 and 2 Electric, Fingertip Controlled Spool Valves Fingertips Located in Armrest			**In Base**
50-KX012	7293530	Valves 1 and 2 Electric, with Multi-Function Joystick on the Armrest (Required when Choosing Factory Installed Loader Provisions (LL004))			No Charge
AUXILIARY VALVE 3 & 4					
55-MU012	Base	3rd and 4th Mechanically Controlled Valves, ... with levers located in Right Hand Console Kickout, Zero Leak, Flow Dividing, Float			**In Base**
55-MU003	7293532	3rd Valve only, Mechanically Controlled. . . . . . with lever located in Right Hand Console Kickout, Zero Leak, Flow Dividing, Float			(1,136.00)
55-MU031	7293676	3rd and 4th Electric, Fingertip Controlled Valves . . . . with Fingertips located on Right Hand Console			1,318.00
POWER BEYOND					
90-GR010	Base	Power Beyond Couplers P/T/LS/D			**In Base**
90-GR000	7293665	Less Power Beyond . . . . . . (Only available with Front Loader Provision LL004)			(716.00)
FRONT AXLE					
For 6614 Dyna-VT					
65-Base	Base	Suspended Power Front Axle			**In Base**
65-NA030	7295101	Non-Suspended Power Front Axle . . . . . . (Not available with 31 MPH (50 KPH) Dyna-6 or Dyna-VT Transmissions)			(6,898.00)
For 6616 Dyna-6 / 6615 & 6616 Dyna-VT					
65-Base	Base	Suspended Power Front Axle			**In Base**
65-NA030	7293599	Non-Suspended Power Front Axle . . . . . . (Not available with 31 MPH (50 KPH) Dyna-6 or Dyna-VT Transmissions)			(6,898.00)
REAR AXLE					
DYNA-6					
60-EE402	Base	Short Bar Rear Axle, 80 in. (2028mm) Length, 3.23 in (82mm) Diameter			**In Base**
60-EE400	7293027	Flange Axle			(456.00)
60-EE404	7293026	Long Bar Rear Axle, 105 in (2672mm) Length, ... 3.23 in (82mm) Diameter (Requires Extremity Lights VE019)			898.00
DYNA-VT					
60-EE402	Base	Short Bar Rear Axle, 90 in. (2277mm) Long, ... 3.74 in. (95mm) Diameter			**In Base**
60-EE404	7293131	Long Bar Rear Axle, 113 in. (2869mm) Long, ... 3.74 in. (95mm) Diameter (Requires Extremity Lights VE019)			898.00
REAR 3-POINT HITCH					
95-GC009	Base	Category 2/3 Telescopic Ball End Links.			**In Base**
95-GC022	7293572*	Category 3 Hook End Links and Cat 2/3 Balls and Cones			No Charge
95-GC026	7293573*	Category 3 Hook End Links, with Hydraulic Top Link . . and Cat 3/3 and Cat 2/3 Balls and Cones (Requires YG001 or YG009 Rear Three Point Stabilizers) ***Not Available with Dyna-VT Transmission**			865.00

SUBJECT TO AVAILABILITY

6600 DELUXE EDITION

Mississippi State Contract Discount: 22%

MASSEY FERGUSON®

(F.O.B. PORT OF ENTRY)

Order Code	Catalog Number	Description	Factory Code	Approx. Weight (lb.)	List Price
REAR THREE POINT STABILIZERS					
165-YG001	Base	Variable Float Telescopic Stabilizers			Base
165-YG006	7293403*	Rub Block Stabilizers (Requires GC009)			640.00
165-YG009	7293574*	Automatic Stabilizers (Requires GC022 or GC026 Lower Links)			328.00
		***Available with Dyna-6 Transmissions Only**			
INSTRUMENT PANEL / CONTROL CENTER DISPLAY (CCD)					
LESS AUTO-STEERING READY					
175-BA003	7293556	Analog and Digital Instrument Panel with Radar (For Actual Ground Speed) and Slip Control. No Control Center Display (CCD).			(5,119.00)
175-BA005	7293557	Analog and Digital Instrument Panel w/o Radar or Slip Control. No Control Center Display (CCD).			(5,927.00)
175-BA008	7293563	Analog and Digital Instrument Panel, Control Center Display (CCD) with Video Input, Electric Valve Control, Radar with Slip Control and ISOBUS.			(145.00)
AUTO-STEERING READY					
175-Base	Base*	Analog and Digital Instrument Panel, Control Center Display (CCD) with Video Input, Electric Valve Control, Radar with Slip Control and ISOBUS. *Order Auto-Guide™ 3000 TopDock Separately* *See Technology Section*			**In Base**
175-BA016	7293538*	Analog and Digital Instrument Panel, Radar with Slip Control, Auto-Steering Ready. No Control Center Display (CCD). *Order Auto-Guide™ 3000 TopDock Separately* *See Technology Section*			(4,659.00)
		*Includes Roof Plate and Wiring Harness)			

Note: The Control Center Display (CCD) is required to utilize Auto-Guide™ 3000.

AUTO-STEERING COMPLETE					
175-BA021	7293677	Analog and Digital Instrument Panel, Control Center Display (CCD) with Video Input, Electric Valve Control, and ISOBUS. Radar with Slip Control. Auto-Guide™ 3000 Sub-Meter (WAAS and OmniStar VBS) Auto Steering System. (Requires SpeedSteer) Auto-Guide™ 3000 uses the Control Center Display (CCD)		6,035.00	
SPEEDSTEER					
185-AD004	Base	SpeedSteer Option			**In Base**
185-AD002	7293558	Less SpeedSteer (Not Available with Base, BA021, or BA016 Instrument Control Panel)			(900.00)

SUBJECT TO AVAILABILITY

6600 DELUXE EDITION

Mississippi State Contract Discount: 22%

(F.O.B. PORT OF ENTRY)

Order Code	Catalog Number	Description	Factory Code	Approx. Weight (lb.)	List Price

TIRES for 6616 Dyna-6

TIRE BRAND SELECTION

70-Blank	7294212	Factory Brand Choice			No Charge
70-T0001	7294195	Michelin Brand Required			1,552.00
70-T0007	7294197	Firestone Brand Required			1,158.00
70-T0010	7294198	Trelleborg Brand Required			1,158.00

FRONT AND REAR TIRES

FLANGE AXLE*

Rear: Single Pressed Steel Manual Adjust - Set of 2
Front: Waffle Wheel

75-W1297	7292864B1 7293762B2	R: 460/85R38 R1W (18.4R38) (MI, FI, TR) F: 380/85R28 R1W (14.9R28) (MI, FI, TR)			(1,394.00)
75-W1309	7292865B1 7294762B2	R: 520/85R38 R1W (MI, FI, TR) F: 420/85R28 R1W (MI, FI, TR)			(37.00)

Rear: Single Welded Pressed Steel - Set of 2
Front: Fixed Welded Steel Rim

75-W1478	7292873B1 7294791B2	R: 540/80R38 (Nokian Industrial) F: 440/80R28 (Nokian Industrial)			8,667.00
75-W1286	7292858B1 7294784B2	R: 540/65R38 R1W (MI, FI, TR) F: 440/65R28 R1W (MI, FI, TR)			(713.00)
75-W1257	7292859B1 7293758B2	R: 600/65R38 R1W (MI, FI, TR) F: 480/65R28 R1W (MI, FI, TR)			(25.00)
75-W1258	7292860B1 7294783B2	R: 650/65R38 R1W (MI, FI, TR) F: 540/65R28 R1W (MI, FI, TR)			2,852.00

Flange Axles are not compatible with Dyna-VT Transmissions

BAR AXLES- SHORT AND LONG

Rear: Single Welded Pressed Steel - Set of 2
Front: Fixed Welded Steel Rim

75-W1670	7294899B4 7294784B2	R: 540/65R38 R1W (MI, FI, TR) F: 440/65R28 R1W (MI, FI, TR)			(656.00)
75-W1572	7294894B4 7293758B2	R: 600/65R38 R1W (MI, FI, TR) F: 480/65R28 R1W (MI, FI, TR)			(93.00)
75-W1673	7294905B4 7294791B2	R: 540/80R38 (Nokian Industrial) F: 440/80R28 (Nokian Industrial)			8,676.00
75-W1262	7294895B4 7294783B2	R: 650/65R38 R1W (MI, FI, TR) F: 540/65R28 R1W (MI, FI, TR)			2,862.00

SUBJECT TO AVAILABILITY

TIRES for 6616 Dyna-6

FRONT AND REAR TIRES - CONTINUED

BAR AXLES- SHORT AND LONG

Rear: Single Semi Dished Cast Centers- Set of 2
Front: Waffle Wheel

Order Code	Catalog Number	Description	Factory Code	Approx. Weight (lb.)	List Price
75-Base	7294897B4 7293762B2	Rear: 460/85R38 R1W (18.4R38) (MI, FI, TR) Front: 380/85R28 R1W (14.9R28) (MI, FI, TR)			**In Base**
75-W1533	7294893B4 7294762B2	Rear: 520/85R38 R1W (MI, FI, TR) Front: 420/85R28 R1W (MI, FI, TR)			2,663.00
75-W1377	7294882B4 7294765B2	Rear: 480/80R42 R1W* (MI, TR, FI) Front: 380/85R30 R1W* (MI, TR, FI)			1,384.00
75-W1620	7294882B4 7294769B2	Rear: 480/80R42 R1W (MI) Front: 320/85R34 R1W (MI)			2,111.00
75-W1548	7294883B4 7294769B2	Rear: 380/90R46 R1W (MI) Front: 320/85R34 R1W (MI)			2,116.00
75-W1388	7294884B4 7294762B2	Rear: 420/80R46 R1W (MI) Front: 420/85R28 R1W (MI)			2,685.00
75-W1409	7294884B4 7294765B2	Rear: 420/80R46 R1W* (MI, FI) Front: 380/85R30 R1W* (MI, FI)			2,064.00
75-W1624	7294884B4 7294769B2	Rear: 420/80R46 R1W (MI) Front: 320/85R34 R1W (MI)			2,791.00
75-W1318	7294883B4 7294765B2	Rear: 380/90R46 R1W* (MI, FI) Front: 380/85R30 R1W* (MI, FI)			1,389.00
75-W1394	7294885B4 7294769B2	Rear: 320/90R50 R1W (MI) Front: 320/85R34 R1W (MI)			2,539.00
75-W1384	7294882B4 7294762B2	Rear: 480/80R42 R1W (MI, TR) Front: 420/85R28 R1W (MI, TR)			2,005.00

*** FIRESTONE TREAD TYPE IS R1**

SUBJECT TO AVAILABILITY

(F.O.B. PORT OF ENTRY)

TIRES for 6616 Dyna-6

FRONT AND REAR TIRES - CONTINUED

Order Code	Catalog Number	Description	Factory Code	Approx. Weight (lb.)	List Price
		BAR AXLES- LONG			
		Rear: Dual Cast Inner / Steel Outer - Set of 4			
		Front: Waffle Wheel			
75-W1374	7294898B4	Duals: 460/85R38 R1W (18.4R38) (MI, TR)			6,965.00
	7293762B2	Front: 380/85R28 R1W (14.9R28) (MI, TR			
75-W1395	7294889B4	Duals: 320/90R50 R1W (MI)			9,591.00
	7294769B2	Front: 320/85R34 R1W (MI)			
75-W1549	7294887B4	Duals: 380/90R46 R1W (MI)			9,345.00
	7294769B2	Front: 320/85R34 R1W (MI)			
75-W1379	7294887B4	Duals: 380/90R46 R1W (MI)			8,618.00
	7294765B2	Front: 380/85R30 R1W (MI)			
75-W1625	7294888B4	Duals: 420/80R46 R1W (MI)			10,279.00
	7294769B2	Front: 320/85R34 R1W (MI)			
75-W1410	7294888B4	Duals: 420/80R46 R1W* (MI, FI)			9,552.00
	7294765B2	Front: 380/85R30 R1W* (MI, FI)			
75-W1471	7294888B4	Duals: 420/80R46 R1W (MI)			10,173.00
	7294762B2	Front: 420/85R28 R1W (MI)			
75-W1621	7294886B4	Duals: 480/80R42 R1W (MI)			8,637.00
	7294769B2	Front: 320/85R34 R1W (MI)			
75-W1380	7294886B4	Duals: 480/80R42 R1W* (MI, TR)			7,910.00
	7294765B2	Front: 380/85R30 R1W* (MI, TR)			
75-W1386	7294886B4	Duals: 480/80R42 R1W (MI, TR)			8,531.00
	7294762B2	Front: 420/85R28 R1W (MI, TR)			
75-W1658	7294896B4	Duals: 520/85R38 R1W (MI)			8,851.00
	7294762B2	Front: 420/85R28 R1W (MI)			
		BAR AXLES- LONG			
		Rear: Dual Cast Inner / Cast Outer - Set of 4			
		Front: Waffle Wheel			
75-W1408	7294925B4	Duals: 380/90R46 R1W (MI)			TBA
	7293764B2	Front: 380/85R30 R1W (MI)			
75-W1412	7294926B4	Duals: 420/80R46 R1W* (MI, FI)			TBA
	7293764B2	Front: 380/85R30 R1W* (MI, FI)			
75-W1406	7294926B4	Duals: 420/80R46 R1W (MI)			TBA
	7293763B2	Front: 420/85R28 R1W (MI)			
75-W1407	7294927B4	Duals: 480/80R42 R1W* (MI, TR)			TBA
	7293764B2	Front: 380/85R30 R1W* (MI, TR)			
75-W1405	7294927B4	Duals: 480/80R42 R1W (MI, TR)			TBA
	7293763B2	Front: 420/85R28 R1W (MI, TR)			

*** FIRESTONE TREAD TYPE IS R1**

SUBJECT TO AVAILABILITY

(F.O.B. PORT OF ENTRY)

TIRES for 6614 Dyna-VT

FRONT AND REAR TIRES - CONTINUED

Order Code	Catalog Number	Description	Factory Code	Approx. Weight (lb.)	List Price
		BAR AXLES- SHORT AND LONG			
		Rear: Single Welded Pressed Steel - Set of 2			
		Front: Fixed Welded Steel Rim			
75-W1670	7294899B4	Rear: 540/65R38 R1W (MI, FI, TR)			(656.00)
	7293757	Front: 440/65R28 R1W (MI, FI, TR)			
75-W1572	7294894B4	Rear: 600/65R38 R1W (MI, FI, TR)			(93.00)
	7294785	Front: 480/65R28 R1W (MI, FI, TR)			
75-W1673	7294905B4	Rear: 540/80R38 (Nokian Industrial)			8,676.00
	7293769	Front: 440/80R28 (Nokian Industrial)			
75-W1262	7294895B4	Rear: 650/65R38 R1W (MI, FI, TR)			2,862.00
	7293759	Front: 540/65R28 R1W (MI, FI, TR)			
75-W1667	7294903B4	Rear: 480/80R34 Industrial (Nokian Industrial)			4,855.00
	7293767	Front: 400/80R24 Industrial (Nokian Industrial)			
75-W1672	7294904B4	Rear: 480/80R38 Industrial (Nokian Industrial)			6,234.00
	7293768	Front: 400/80R28 Industrial (Nokian Industrial)			
		Rear: Single Semi Dished Cast Centers- Set of 2			
		Front: Waffle Wheel			
75-Base	7294897B4	Rear: 460/85R38 R1W (18.4R38) (MI, FI, TR)			**In Base**
	7294786	Front: 380/85R28 R1W (14.9R28) (MI, FI, TR)			
75-W1533	7294893B4	Rear: 520/85R38 R1W (MI, FI, TR)			2,663.00
	7293763	Front: 420/85R28 R1W (MI, FI, TR)			
75-W1377	7294882B4	Rear: 480/80R42 R1W* (MI, TR, FI)			1,384.00
	7293764	Front: 380/85R30 R1W* (MI, TR, FI)			
75-W1388	7294884B4	Rear: 420/80R46 R1W (MI)			2,685.00
	7293763	Front: 420/85R28 R1W (MI)			
75-W1409	7294884B4	Rear: 420/80R46 R1W* (MI, FI)			2,064.00
	7293764	Front: 380/85R30 R1W* (MI, FI)			
75-W1318	7294883B4	Rear: 380/90R46 R1W* (MI, FI)			1,389.00
	7293764	Front: 380/85R30 R1W* (MI, FI)			
75-W1384	7294882B4	Rear: 480/80R42 R1W (MI, TR)			2,005.00
	7293763	Front: 420/85R28 R1W (MI, TR)			
		BAR AXLES- LONG			
		Rear: Dual Cast Inner / Steel Outer - Set of 4			
		Front: Waffle Wheel			
75-W1374	7294898B4	Duals: 460/85R38 R1W (18.4R38) (MI, TR)			6,965.00
	7294786	Front: 380/85R28 R1W (14.9R28) (MI, TR)			
75-W1379	7294887B4	Duals: 380/90R46 R1W (MI)			8,618.00
	7293764	Front: 380/85R30 R1W (MI)			
75-W1410	7294888B4	Duals: 420/80R46 R1W* (MI, FI)			9,552.00
	7293764	Front: 380/85R30 R1W* (MI, FI)			
75-W1471	7294888B4	Duals: 420/80R46 R1W (MI)			10,173.00
	7293763	Front: 420/85R28 R1W (MI)			
75-W1380	7294886B4	Duals: 480/80R42 R1W* (MI, TR)			7,910.00
	7293764	Front: 380/85R30 R1W* (MI, TR)			
75-W1386	7294886B4	Duals: 480/80R42 R1W (MI, TR)			8,531.00
	7293763	Front: 420/85R28 R1W (MI, TR)			
75-W1658	7294896B4	Duals: 520/85R38 R1W (MI)			8,851.00
	7293763	Front: 420/85R28 R1W (MI)			

*** FIRESTONE TREAD TYPE IS R1**

SUBJECT TO AVAILABILITY

(F.O.B. PORT OF ENTRY)

Order Code	Catalog Number	Description	Factory Code	Approx. Weight (lb.)	List Price
		TIRES for 6615 & 6616 Dyna-VT			
FRONT AND REAR TIRES - CONTINUED					
		BAR AXLES- SHORT AND LONG			
		Rear: Single Welded Pressed Steel - Set of 2 ***Front: Fixed Welded Steel Rim***			
75-W1670	7294899B4 7294784B2	Rear: 540/65R38 R1W (MI, FI, TR) Front: 440/65R28 R1W (MI, FI, TR)			(656.00)
75-W1572	7294894B4 7293758B2	Rear: 600/65R38 R1W (MI, FI, TR) Front: 480/65R28 R1W (MI, FI, TR)			(93.00)
75-W1673	7294905B4 7294791B2	Rear: 540/80R38 (Nokian Industrial) Front: 440/80R28 (Nokian Industrial)			8,676.00
75-W1262	7294895B4 7294783B2	Rear: 650/65R38 R1W (MI, FI, TR) Front: 540/65R28 R1W (MI, FI, TR)			2,862.00
		Rear: Single Semi Dished Cast Centers- Set of 2 ***Front: Waffle Wheel***			
75-Base	7294897B4 7293762B2	Rear: 460/85R38 R1W (18.4R38) (MI, FI, TR) Front: 380/85R28 R1W (14.9R28) (MI, FI, TR)			**In Base**
75-W1533	7294893B4 7294762B2	Rear: 520/85R38 R1W (MI, FI, TR) Front: 420/85R28 R1W (MI, FI, TR)			2,663.00
75-W1377	7294882B4 7294765B2	Rear: 480/80R42 R1W* (MI, TR, FI) Front: 380/85R30 R1W* (MI, TR, FI)			1,384.00
75-W1620	7294882B4 7294769B2	Rear: 480/80R42 R1W (MI) Front: 320/85R34 R1W (MI)			2,111.00
75-W1548	7294883B4 7294769B2	Rear: 380/90R46 R1W (MI) Front: 320/85R34 R1W (MI)			2,116.00
75-W1388	7294884B4 7294762B2	Rear: 420/80R46 R1W (MI) Front: 420/85R28 R1W (MI)			2,685.00
75-W1409	7294884B4 7294765B2	Rear: 420/80R46 R1W* (MI, FI) Front: 380/85R30 R1W* (MI, FI)			2,064.00
75-W1624	7294884B4 7294769B2	Rear: 420/80R46 R1W (MI) Front: 320/85R34 R1W (MI)			2,791.00
75-W1318	7294883B4 7294765B2	Rear: 380/90R46 R1W* (MI, FI) Front: 380/85R30 R1W* (MI, FI)			1,389.00
75-W1394	7294885B4 7294769B2	Rear: 320/90R50 R1W (MI) Front: 320/85R34 R1W (MI)			2,539.00
75-W1384	7294882B4 7294762B2	Rear: 480/80R42 R1W (MI, TR) Front: 420/85R28 R1W (MI, TR)			2,005.00

*** FIRESTONE TREAD TYPE IS R1**

SUBJECT TO AVAILABILITY

(F.O.B. PORT OF ENTRY)

TIRES for 6615 & 6616 Dyna-VT

FRONT AND REAR TIRES - CONTINUED

BAR AXLES- LONG

Rear: Dual Cast Inner / Steel Outer - Set of 4
Front: Waffle Wheel

Order Code	Catalog Number	Description	Factory Code	Approx. Weight (lb.)	List Price
75-W1374	7294898B4 7293762B2	Duals: 460/85R38 R1W (18.4R38) (MI, TR) Front: 380/85R28 R1W (14.9R28) (MI, TR)			6,965.00
75-W1395	7294889B4 7294769B2	Duals: 320/90R50 R1W (MI) Front: 320/85R34 R1W (MI)			9,591.00
75-W1549	7294887B4 7294769B2	Duals: 380/90R46 R1W (MI) Front: 320/85R34 R1W (MI)			9,345.00
75-W1379	7294887B4 7294765B2	Duals: 380/90R46 R1W (MI) Front: 380/85R30 R1W (MI)			8,618.00
75-W1625	7294888B4 7294769B2	Duals: 420/80R46 R1W (MI) Front: 320/85R34 R1W (MI)			10,279.00
75-W1410	7294888B4 7294765B2	Duals: 420/80R46 R1W* (MI, FI) Front: 380/85R30 R1W* (MI, FI)			9,552.00
75-W1471	7294888B4 7294762B2	Duals: 420/80R46 R1W (MI) Front: 420/85R28 R1W (MI)			10,173.00
75-W1621	7294886B4 7294769B2	Duals: 480/80R42 R1W (MI) Front: 320/85R34 R1W (MI)			8,637.00
75-W1380	7294886B4 7294765B2	Duals: 480/80R42 R1W* (MI, TR) Front: 380/85R30 R1W* (MI, TR)			7,910.00
75-W1386	7294886B4 7294762B2	Duals: 480/80R42 R1W (MI, TR) Front: 420/85R28 R1W (MI, TR)			8,531.00
75-W1658	7294896B4 7294762B2	Duals: 520/85R38 R1W (MI) Front: 420/85R28 R1W (MI)			8,851.00

*** FIRESTONE TREAD TYPE IS R1**

SUBJECT TO AVAILABILITY

6600 DELUXE EDITION

Mississippi State Contract Discount: 22%

(F.O.B. PORT OF ENTRY)

Order Code	Catalog Number	Description	Factory Code	Approx. Weight (lb.)	List Price
PTO					
DYNA-6					
100-LC002	Base	Standard and Economy PTO Drive -2000 & 1550. . . . Engine RPM. Exchangeable Shaft PTO- 540 RPM 6 Spline + 1000 RPM 21 Spline			**In Base**
100-LC001	7293589	540 RPM 6 Spline & 1000 RPM 21 Spline . . . . . Exchangeable Shaft with No Economy			(917.00)
DYNA-VT					
100-Base	Base	540/540E/1000 RPM Flanged PTO with one 6 Spline Shaft and one 21 Spline Shaft, with In-Cab Controls			**In Base**
FRONT HITCH					
230-FA000	Base	Less Front Hitch			**In Base**
230-F1132	7293594	2800 kg. (6172 lbs.) Front Linkage with . . . . . 1 Set of Hydraulic Couplers			6,190.00
230-F1134	7293595	2800 kg. (6172 lbs.) Front Linkage with . . . . . 2 sets of Hydraulic Couplers			6,573.00
230-F1135	7293596	2800 kg. (6172 lbs.) Front Linkage with . . . . . 1 set of Hydraulic Couplers with Pressure Drain			6,338.00
LOADER PROVISION					
350-LL000	Base	Less Loader Provisions.			**In Base**
350-LL004	7293484	Front Loader Provisions including Hydraulics, ... Subframe. (**Requires Less Power Beyond- GR000 & Requires: Valves 1 and 2 Electric with a Joystick (KX012))**			5,853.00
CAB					
365-AF009	7294249	Radio, AM/FM, MP3 Compatible			(110.00)
125-AE042	7293546	Superluxe Grammar Seat			1,722.00
145-AL009	7293547	Telescopic Large Side Mirrors with Electric . . . . . De-Icing and Adjustment			453.00
120-AQ004	7293082	Automatic Climate Control			1,197.00
115-AM088	7293592	Hydraulic Cab Suspension			2,910.00
140-AI020	7293077	Standard Cab Roof with Roof Hatch			262.00
140-E1022	7293078	Visio roof . . . . . (Not Compatible with AL009 Mirrors or with Automatic Climate Control (AQ004) or with AutoGuide Ready Options (BA008/BA012/ BA013/ BA016))			1,524.00

SUBJECT TO AVAILABILITY

6600 DELUXE EDITION

Mississippi State Contract Discount: 22%

MASSEY FERGUSON®

(F.O.B. PORT OF ENTRY)

Order Code	Catalog Number	Description	Factory Code	Approx. Weight (lb.)	List Price
FRONT WEIGHTS					
285-YA112	7293487	121 lbs. (55 kg.) Front Weights, Set of 12 . . . . . with Hardware - total Weight 1,455 lbs. (660 kg.)			2,228.00
REAR WHEEL WEIGHTS					
325-RD040	7294192*	551 lbs. (250 kg.) Weights, Set of 2 . . . . . Mounts Externally to Wheel		1102	1,791.00
325-RD041	7294200*	551 lbs. (250 kg.) Weights, Set of 4 . . . . . Mounts Externally to Wheel		2204	3,582.00
		***NOT COMPATIBLE WITH MANUAL ADJUST FLANGE AXLE RIMS**			
BELLY AND HITCH WEIGHTS					
245-YD001	7293374	1 Belly Weight - 584 lbs. (265 kg.) . . . . . (For use **WITHOUT** Front 3-Point Hitch)		584	1,447.00
245-YD001	7293375	1 Belly Weight - 397 lbs. (180 kg.) . . . . . (For use **WITH** Front 3-Point Hitch)		430	1,064.00
345-YB003	7294119	1873 lbs. (850 kg.) 3-Point Hitch Weight . . . . . (For use with Front 3-Point Hitch or Rear 3-Point Hitch without Quick Hitch Only if Rear Links are Hooks Style GC022)		1984	3,307.00
ELECTRICAL					
215-CB002	Base	Engine Block Heater - 110 Volt			**In Base**
215-CB000	7293593	Less Engine Block Heater.			(207.00)
ALTERNATOR					
220-CE019	Base	Twin 120 AMP Alternators.			**In Base**
220-CE020	7293561	175 AMP Alternator. . . . . (Not Available with ISOBUS.)			(380.00)
LIGHTING					
205-VF013	7293103	Dual Roof-Mounted Rotating Beacons, Left and Right . (Includes SAE SMV sign)		1102	502.00
195-VG078	7295103	2 Front and 2 Rear Xenon Work Lights.. . . . . Xenon Bulb for Brighter Lights and Longer Bulb Life			3,293.00
360-VE019	7293476	Extremity Lighting . . . . . (Required with Long Bar Axle)			734.00

SUBJECT TO AVAILABILITY

6600 DELUXE EDITION

Mississippi State Contract Discount: 22%

(F.O.B. PORT OF ENTRY)

Order Code	Catalog Number	Description	Factory Code	Approx. Weight (lb.)	List Price

PIVOTING FRONT FENDERS

155-WE110	Base	Pivoting Front Fenders - Standard Width . . . . . Width depends on tire selection; see Chart Below			**In Base**
155-WE111	7293598	Pivoting Front Fenders - Wide Width . . . . . Width depends on tire selection; see Chart Below			116.00

Fender Size		
Standard	**Wide**	**Tire Sizes**
12.6" (320 mm)	13.9" (355 mm)	320/85R34 (12.4R34)
13.9" (355 mm)	14.9" (380 mm)	340/85R24 (13.6R24) 340/85R28 (13.6R28)
14.9" (380 mm)	16.1" (410 mm)	380/85R28 (14.9R28) 380/85R30 (14.9R30) 400/80R24 400/80R28
16.1" (410 mm)	18.5" (470 mm)	420/85R28 (16.9R28) 440/65R28
18.5" (470 mm)	20.4" (520 mm)	440/80R28 480/65R28
20.4" (520 mm)	24.4" (620 mm)	540/65R28

REAR FENDERS

255-WD012	Base	Rear Fenders without Extensions, 78.74"(2.00 M) . . .			**In Base**
255-WD017	7293107	Wide Fender -90.55" (2.3 M) with Rear Extension . . .			1,272.00
255-WD020	7293109	Extra Wide Fender -100.4" (2.55 M) . . . . . with Rear Extension			1,421.00

SUBJECT TO AVAILABILITY

6600 DELUXE EDITION

Mississippi State Contract Discount: 22%

MASSEY FERGUSON®

(F.O.B. PORT OF ENTRY)

Order Code	Catalog Number	Description	Factory Code	Approx. Weight (lb.)	List Price
MISCELLANEOUS					
35-EN001	7293092	Creeper Gear (4:1 Reduction). . . . . (**Not Compatible with Dyna-VT)**			2,297.00
35-EN002	7293402	14:1 Super Creeper Reduction Gear . . . . . (**Not Compatible with Dyna-VT)**			2,822.00
250-GS001	7293100	Hydraulic Trailer Brakes			785.00
250-GS062	7293551	Pneumatic Trailer Brakes			6,505.00
250-GS067	7293552	Pneumatic & Hydraulic Trailer Brakes.			7,289.00
225-LQ001	7293553	Water Separator (Fuel Filter)			448.00
275-TC005	7294210	French Language OIB.			No Charge
275-TC011	7294211	Spanish Language OIB			No Charge
DEALER INSTALLED OPTIONS					
FRONT WEIGHTS					
	5020186M	8 x 55 KG (121 lbs.) Front Weights		968	1,485.00
	5020187M	10 x 55 KG (121 lbs.) Front Weights		1210	1,857.00
	5020188M	12 x 55 KG (121 lbs.) Front Weights		1452	2,228.00
	5020189M	14 x 55 KG (121 lbs.) Front Weights		1694	2,600.00

SUBJECT TO AVAILABILITY

6600 PREMIUM EDITION

MASSEY FERGUSON®

Mississippi State Contract Discount: 22%

(F.O.B. PORT OF ENTRY)

PREMIUM EDITION FEATURES

ENGINE
6614/6615/6616

AGCO POWER 4.9L (299 cu in.) 4 Cylinder, Tier 4i Compliant
- e3 SCR Technology
- Air-to-Air Aftercooled, Common Rail Injection, Turbocharged

Electronic Engine Management (EEM) with Dual ERPM Settings
Electronic Controlled Viscous Fan Drive
Dual Element Dry Type Air Cleaner
Vertical Exhaust at Right Front Cab Post
Cooling System: Antifreeze to Minus 30°F(-34°C)
Fuel Tank Capacity: 61 Gal (223L)
DEF Tank Capacity: 9.2 Gal (35L)

POWERTRAIN
6614/6615/6616: DYNA-VT
- Continuously Variable Transmission, 60 ft/h to 25 MPH (18.2 Meters/h to 40 KPH)
- Dynamic Tractor Management (DTM) with Two Programmable Cruise Speeds
- Short Bar Rear Axle, 90 In. (2277mm) Long, 3.74 in. (95mm) Diameter

6616: DYNA-6 TRANSMISSION
- 24F/24R Semi-Powershift, 4 Ranges with 6 Powershifts per Range
- Dynamic Tractor Management (DTM) with Two Programmable Cruise Speeds
- Short Bar Rear Axle, 80 in. (2028mm) Long, 3.23 in. (82mm) Diameter

Multi-Disc Wet Brakes
Power Differential Lock
Independent PTO:
DYNA-VT:
540/540E/1000 RPM Flanged Shaft, 540 with 6 Spline and 1000 with 21 Spline
DYNA-6: 540/540E/1000/1000E Exchangeable Shaft, 540 with 6 Spline and 1000 with 21 Spline with Electric Control
Rear Fender Mounted PTO Shut-Off

FRONT WHEEL ASSIST AXLE
Pivoting Front Fenders
Power Front Axle (PFA)
- 8 Bolt Pattern: 6614 Dyna-VT
- 10 Bolt Pattern: 6616 Dyna-6

Suspended Front Axle
Shielded Center Drive Line with Electro-Hydraulic Control & Front Wheel Drive Differential Lock
55 Degree Steering Angle

HYDRAULICS
Power Beyond Couplers
Closed Center Load Sensing 29 gpm (110 L/Min) Pump
2900 PSI (200 Bar) Maximum Pressure
4 Electric Valves - Fingertip Controlled, 2 Located on Armrest, 2 Located Right Hand Console
Fast Steering

WHEELS AND TIRES
Rear 460/85R38 R1W Single Wheels
Front 380/85R28 R1W Single Waffle Wheels

HITCH
3-Point Hitch: Category 2/3 Linkage Ball Ends
- 11,400 lbs lift capacity @ 24"
- Active Transport Control
- Lower Link Sensing
- Electronic Draft Control, Electronic Height Control, & Rate of Drop
- Variable Float Telescopic Stabilizers

Left and Right Side External 3 Point Control
Drawbar: Category 2, Clevis and Drop Pin

ELECTRICAL SYSTEM
2 – 120 Amp Alternators
2 – 12V Batteries, 600 CCA Each (SAE)
7 Pin ASAE Rear Trailer Electrical Outlet
Electrical Isolator Switch and Jumpstart Point
110V Engine Block Heater
Ignition with Neutral Start and Key Shutoff

LIGHTING
8 Front Hood Mounted Lights
Four Front Single Bulb Worklights
Two Rear Double Bulb Worklights
Two Field Lights on Hand Rails and Rear Fenders with Tail Lights, Flashing Warning Lights, and Turn Signals

INSTRUMENTS
Control Center Display (CCD)
- Video Input
- Electric Valve Control
- ISOBUS Compliant

Radar with Slip Control
Tachometer: Digital and Analog
PTO Speed: Digital
Ground Speed Display: Digital
Fuel Level, DEF Level, and Coolant Temp Gauges
Warning/Information Lights

OPERATOR AREA
6 Post Cab
OptiRide Cab Suspension
Transmission Control Multicontroller on Armrest
Adjustable Steering Column
Front Sun Visor
Auto Air Conditioning and Climate Control
Air Suspended Seat - Automatic Adjustment
Front and Rear Windshield Wiper/Washer
Dual Large Telescoping Outside Rear View Mirrors with De-Icing.
Single Inside Rear View Mirror
Radio with AM/FM/CD/MP3/Bluetooth and 2 Audio Speakers and Antenna
3 Pin 12V Power Outlet
12V Cigarette Lighter Style Power Outlet
ISO 11783 9-Pin in Cab Connector
ISO 11786 7-Pin in Cab Connector

OTHER STANDARD FEATURES
Auto-Steer Complete: Auto-Guide™ 3000 Sub-Meter (WAAS and OmniStar VBS)
Auto Steering System using the Control Center Display (CCD)
AGCOMMAND Ready with Antenna, Bracket, and Harness (To Complete, See Technology Section)
Lockable Tool Box
SMV Sign
Molded Rear Fenders
English Literature

SUBJECT TO AVAILABILITY

MF6600 models with Dyna-6 Transmission can not be sold in Nebraska

6600 PREMIUM EDITION

Mississippi State Contract Discount: 22%

MASSEY FERGUSON®

(F.O.B. PORT OF ENTRY)

Order Code	Catalog Number	Description	Factory Code	Approx. Weight (lb.)	List Price

ONE *ORDER CODE* FROM EACH GROUP MUST BE SPECIFIED. (Unless In Base Option is desired)

BASE MACHINE

DYNA-6 EDITIONS

MF6616~D6~EX~02	7292220	Massey 6616 Premium Tractor 125 PTO HP			163,751.00

DYNA-VT EDITIONS

MF6614~DV~EX~02	7292221	Massey 6614 Premium Tractor 100 PTO HP			159,628.00
MF6615~DV~EX~02	7292222	Massey 6615 Premium Tractor 110 PTO HP			165,519.00
MF6616~DV~EX~02	7292223	Massey 6616 Premium Tractor 120 PTO HP			171,411.00

TRANSMISSION OPTIONS FOR DYNA-6 EDITIONS

25-EA655	Base	6x4 Dyna-6 AUTODRIVE Transmission with . . . . . 24F/24R gears. 25 MPH (40 KPH)			**In Base**
25-G1063	7293524	6X4 Dyna-6 AUTODRIVE Transmission with . . . . 24F/24R gears. 31 MPH (50 KPH) . Also includes: High Pressure Brakes.			1,585.00

TRANSMISSION OPTIONS FOR DYNA-VT EDITIONS

25-EA621	Base	Dyna-VT Transmission - 25 MPH (40 KPH)			**In Base**
25-EA622	7293525	Dyna-VT Transmission - 31 MPH (50 KPH)			775.00

EQUIPMENT REQUIRED FOR NORTH AMERICA

	7293488	Instructional Seat			472.00
	7293489	Front Weight Carrier . . . . . (Removed when factory installed front 3-Point Hitch is selected.)			304.00

MARKETING PACKAGE

DYNA-6	MKT0328	Upgrade Package Includes: . . . . . 6X4 Dyna-6 VI AUTODRIVE Transmission 31 MPH (50 KPH) Superluxe Grammar Seat			3,307.00
DYNA-VT	MKT0329	Upgrade Package Includes: . . . . . Dyna-VT Transmission - 31 MPH (50 KPH) Superluxe Grammar Seat			2,497.00

SUBJECT TO AVAILABILITY

6600 PREMIUM EDITION

Mississippi State Contract Discount: 22%

(F.O.B. PORT OF ENTRY)

Order Code	Catalog Number	Description	Factory Code	Approx. Weight (lb.)	List Price
AUXILIARY VALVE 1 & 2					
50-KX011	Base	Valves 1 and 2 Electric, Fingertip Controlled Spool Valves Fingertips Located in Armrest			**In Base**
50-KX012	7293530	Valves 1 and 2 Electric, with Multi-Function Joystick on the Armrest (Required When Choosing Factory Installed Loader Provisions (LL004))			No Charge
AUXILIARY VALVE 3 & 4					
55-MU031	Base	3rd and 4th Electric, Fingertip Controlled Valves . . . . with Fingertips located on Right Hand Console			**In Base**
POWER BEYOND					
90-GR010	Base	Power Beyond Couplers P/T/LS/D			**In Base**
90-GR000	7293665	Less Power Beyond . . . . . (Only available with Front Loader Provision LL004)			(716.00)
FRONT AXLE					
65-NA032	Base	Suspended Power Front Axle			**In Base**
REAR AXLE					
DYNA-6					
60-EE402	Base	Short Bar Rear Axle, 80 in. (2028mm) Long, ... 3.23 in (82mm) Diameter			**In Base**
60-EE400	7293027	Flange Axle			(456.00)
60-EE404	7293026	Long Bar Rear Axle, 3.23 in (82mm) Diameter, ... 105 in (2672mm) Long (Requires Extremity Lights VE019)			898.00
DYNA-VT					
60-EE402	Base	Short Bar Rear Axle, 90 in. (2277mm) Long, ... 3.74 in. (95mm) Diameter			**In Base**
60-EE404	7293131	Long Bar Rear Axle, 113 in. (2869mm) Long, ... 3.74 in. (95mm) Diameter (Requires Extremity Lights VE019)			898.00
REAR 3-POINT HITCH					
95-GC009	Base	Category 2/3 Telescopic Ball End Links			**In Base**
95-GC022	7293572*	Category 3 Hook End Links and Cat 2/3 Balls and Cones			No Charge
95-GC026	7293573*	Category 3 Hook End Links, with Hydraulic Top Link . . and Cat 3/3 and Cat 2/3 Balls and Cones. (Requires YG001 or YG009 Rear Three Point Stabilizers)			865.00
		***Not Available with Dyna-VT Transmission**			
REAR THREE POINT STABILIZERS					
165-Base	Base	Variable Float Telescopic Stabilizers			**In Base**
165-YG006	7293403*	Rub Block Stabilizers (Requires GC009)			640.00
165-YG009	7293574*	Automatic Stabilizers . . . . . (Requires GC022 or GC026 Lower Links)			328.00
		***Available with Dyna-6 Transmissions Only**			

SUBJECT TO AVAILABILITY

(F.O.B. PORT OF ENTRY)

Order Code	Catalog Number	Description	Factory Code	Approx. Weight (lb.)	List Price
INSTRUMENT PANEL / CONTROL CENTER DISPLAY (CCD)					
LESS AUTO-STEERING READY					
175-BA008	7293679	Analog and Digital Instrument Panel, Control Center . . Display (CCD) with Video Input, Electric Valve Control, Radar with Slip Control and ISOBUS.			(4,973.00)
AUTO-STEERING READY					
175-BA012	7293678	Analog and Digital Instrument Panel, Control Cente . . Display (CCD) with Video Input, Electric Valve Control, Radar with Slip Control and ISOBUS. (Includes Roof Plate and Wiring Harness) *Order Auto-Guide™ 3000 TopDock Separately* *See Technology Section*			(4,828.00)
		Note: The Control Center Display (CCD) is required to utilize Auto-Guide™ 3000.			
AUTO-STEERING COMPLETE					
175-BA021	Base	Analog and Digital Instrument Panel, Control Center . . Display (CCD) with Video Input, Electric Valve Control, and ISOBUS. Radar with Slip Control. Auto-Guide™ 3000 Sub-Meter (WAAS and OmniStar VBS) Auto Steering System. (Requires SpeedSteer) Auto-Guide™ 3000 uses the Control Center Display (CCD).			**In Base**
SPEEDSTEER					
185-AD004	Base	SpeedSteer Option			**In Base**
185-AD002	7293558	Less SpeedSteer Option . . . . . Not Available with BA012 and Base Instrument Control Panel			(900.00)

SUBJECT TO AVAILABILITY

(F.O.B. PORT OF ENTRY)

Order Code	Catalog Number	Description	Factory Code	Approx. Weight (lb.)	List Price

TIRES for 6616 Dyna-6

TIRE BRAND SELECTION

70-Blank	7294212	Factory Brand Choice			No Charge
70-T0001	7294195	Michelin Brand Required			1,552.00
70-T0007	7294197	Firestone Brand Required			1,158.00
70-T0010	7294198	Trelleborg Brand Required			1,158.00

FRONT AND REAR TIRES

FLANGE AXLE*

Rear: Single Pressed Steel Manual Adjust - Set of 2
Front: Waffle Wheel

75-W1297	7292864B1 7293762B2	Rear: 460/85R38 R1W (18.4R38) (MI, FI, TR) Front: 380/85R28 R1W (14.9R28) (MI, FI, TR)			(1,394.00)
75-W1309	7292865B1 7294762B2	Rear: 520/85R38 R1W (MI, FI, TR) Front: 420/85R28 R1W (MI, FI, TR)			(37.00)

Rear: Single Welded Pressed Steel - Set of 2
Front: Fixed Welded Steel Rim

75-W1478	7292873B1 7294791B2	Rear: 540/80R38 (Nokian Industrial) Front: 440/80R28 (Nokian Industrial)			8,667.00
75-W1286	7292858B1 7294784B2	Rear: 540/65R38 R1W (MI, FI, TR) Front: 440/65R28 R1W (MI, FI, TR)			(713.00)
75-W1257	7292859B1 7293758B2	Rear: 600/65R38 R1W (MI, FI, TR) Front: 480/65R28 R1W (MI, FI, TR)			(25.00)
75-W1258	7292860B1 7294783B2	Rear: 650/65R38 R1W (MI, FI, TR) Front: 540/65R28 R1W (MI, FI, TR)			2,852.00

****Flange Axles are not compatible with Dyna-VT Transmissions***

BAR AXLES- SHORT AND LONG

Rear: Single Welded Pressed Steel - Set of 2
Front: Fixed Welded Steel Rim

75-W1670	7294899B4 7294784B2	Rear: 540/65R38 R1W (MI, FI, TR) Front: 440/65R28 R1W (MI, FI, TR)			(656.00)
75-W1572	7294894B4 7293758B2	Rear: 600/65R38 R1W (MI, FI, TR) Front: 480/65R28 R1W (MI, FI, TR)			(93.00)
75-W1673	7294905B4 7294791B2	Rear: 540/80R38 (Nokian Industrial) Front: 440/80R28 (Nokian Industrial)			8,676.00
75-W1262	7294895B4 7294783B2	Rear: 650/65R38 R1W (MI, FI, TR) Front: 540/65R28 R1W (MI, FI, TR)			2,862.00

SUBJECT TO AVAILABILITY

(F.O.B. PORT OF ENTRY)

TIRES for 6616 Dyna-6

FRONT AND REAR TIRES - CONTINUED

BAR AXLES- SHORT AND LONG

Rear: Single Semi Dished Cast Centers- Set of 2
Front: Waffle Wheel

Order Code	Catalog Number	Description	Factory Code	Approx. Weight (lb.)	List Price
75-Base	7294897B4 7293762B2	Rear: 460/85R38 R1W (18.4R38) (MI, FI, TR) Front: 380/85R28 R1W (14.9R28) (MI, FI, TR)			**In Base**
75-W1533	7294893B4 7294762B2	Rear: 520/85R38 R1W (MI, FI, TR) Front: 420/85R28 R1W (MI, FI, TR)			2,663.00
75-W1377	7294882B4 7294765B2	Rear: 480/80R42 R1W* (MI, TR, FI) Front: 380/85R30 R1W* (MI, TR, FI)			1,384.00
75-W1620	7294882B4 7294769B2	Rear: 480/80R42 R1W (MI) Front: 320/85R34 R1W (MI)			2,111.00
75-W1548	7294883B4 7294769B2	Rear: 380/90R46 R1W (MI) Front: 320/85R34 R1W (MI)			2,116.00
75-W1388	7294884B4 7294762B2	Rear: 420/80R46 R1W (MI) Front: 420/85R28 R1W (MI)			2,685.00
75-W1409	7294884B4 7294765B2	Rear: 420/80R46 R1W* (MI, FI) Front: 380/85R30 R1W* (MI, FI)			2,064.00
75-W1624	7294884B4 7294769B2	Rear: 420/80R46 R1W (MI) Front: 320/85R34 R1W (MI)			2,791.00
75-W1318	7294883B4 7294765B2	Rear: 380/90R46 R1W* (MI, FI) Front: 380/85R30 R1W* (MI, FI)			1,389.00
75-W1394	7294885B4 7294769B2	Rear: 320/90R50 R1W (MI) Front: 320/85R34 R1W (MI)			2,539.00
75-W1384	7294882B4 7294762B2	Rear: 480/80R42 R1W (MI, TR) Front: 420/85R28 R1W (MI, TR)			2,005.00

*** FIRESTONE TREAD TYPE IS R1**

SUBJECT TO AVAILABILITY

(F.O.B. PORT OF ENTRY)

TIRES for 6616 Dyna-6

FRONT AND REAR TIRES - CONTINUED

Order Code	Catalog Number	Description	Factory Code	Approx. Weight (lb.)	List Price
		BAR AXLES- LONG			
		Rear: Dual Cast Inner / Steel Outer - Set of 4			
		Front: Waffle Wheel			
75-W1374	7294898B4	Duals: 460/85R38 R1W (18.4R38) (MI, TR)			6,965.00
	7293762B2	Front: 380/85R28 R1W (14.9R28) (MI, TR			
75-W1395	7294889B4	Duals: 320/90R50 R1W (MI)			9,591.00
	7294769B2	Front: 320/85R34 R1W (MI)			
75-W1549	7294887B4	Duals: 380/90R46 R1W (MI)			9,345.00
	7294769B2	Front: 320/85R34 R1W (MI)			
75-W1379	7294887B4	Duals: 380/90R46 R1W (MI)			8,618.00
	7294765B2	Front: 380/85R30 R1W (MI)			
75-W1625	7294888B4	Duals: 420/80R46 R1W (MI)			10,279.00
	7294769B2	Front: 320/85R34 R1W (MI)			
75-W1410	7294888B4	Duals: 420/80R46 R1W* (MI, FI)			9,552.00
	7294765B2	Front: 380/85R30 R1W* (MI, FI)			
75-W1471	7294888B4	Duals: 420/80R46 R1W (MI)			10,173.00
	7294762B2	Front: 420/85R28 R1W (MI)			
75-W1621	7294886B4	Duals: 480/80R42 R1W (MI)			8,637.00
	7294769B2	Front: 320/85R34 R1W (MI)			
75-W1380	7294886B4	Duals: 480/80R42 R1W* (MI, TR)			7,910.00
	7294765B2	Front: 380/85R30 R1W* (MI, TR)			
75-W1386	7294886B4	Duals: 480/80R42 R1W (MI, TR)			8,531.00
	7294762B2	Front: 420/85R28 R1W (MI, TR)			
75-W1658	7294896B4	Duals: 520/85R38 R1W (MI)			8,851.00
	7294762B2	Front: 420/85R28 R1W (MI)			
		BAR AXLES- LONG			
		Rear: Dual Cast Inner / Cast Outer - Set of 4			
		Front: Waffle Wheel			
75-W1408	7294925B4	Duals: 380/90R46 R1W (MI)			TBA
	7293764B2	Front: 380/85R30 R1W (MI)			
75-W1412	7294926B4	Duals: 420/80R46 R1W* (MI, FI)			TBA
	7293764B2	Front: 380/85R30 R1W* (MI, FI)			
75-W1406	7294926B4	Duals: 420/80R46 R1W (MI)			TBA
	7293763B2	Front: 420/85R28 R1W (MI)			
75-W1407	7294927B4	Duals: 480/80R42 R1W* (MI, TR)			TBA
	7293764B2	Front: 380/85R30 R1W* (MI, TR)			
75-W1405	7294927B4	Duals: 480/80R42 R1W (MI, TR)			TBA
	7293763B2	Front: 420/85R28 R1W (MI, TR)			

SUBJECT TO AVAILABILITY

*** FIRESTONE TREAD TYPE IS R1**

(F.O.B. PORT OF ENTRY)

TIRES for 6614 Dyna-VT

FRONT AND REAR TIRES - CONTINUED

Order Code	Catalog Number	Description	Factory Code	Approx. Weight (lb.)	List Price
		BAR AXLES- SHORT AND LONG			
		Rear: Single Welded Pressed Steel - Set of 2			
		Front: Fixed Welded Steel Rim			
75-W1670	7294899B4	Rear: 540/65R38 R1W (MI, FI, TR)			(656.00)
	7293757	Front: 440/65R28 R1W (MI, FI, TR)			
75-W1572	7294894B4	Rear: 600/65R38 R1W (MI, FI, TR)			(93.00)
	7294785	Front: 480/65R28 R1W (MI, FI, TR)			
75-W1673	7294905B4	Rear: 540/80R38 (Nokian Industrial)			8,676.00
	7293769	Front: 440/80R28 (Nokian Industrial)			
75-W1262	7294895B4	Rear: 650/65R38 R1W (MI, FI, TR)			2,862.00
	7293759	Front: 540/65R28 R1W (MI, FI, TR)			
75-W1667	7294903B4	Rear: 480/80R34 Industrial (Nokian Industrial)			4,855.00
	7293767	Front: 400/80R24 Industrial (Nokian Industrial)			
75-W1672	7294904B4	Rear: 480/80R38 Industrial (Nokian Industrial)			6,234.00
	7293768	Front: 400/80R28 Industrial (Nokian Industrial)			
		Rear: Single Semi Dished Cast Centers- Set of 2			
		Front: Waffle Wheel			
75-Base	7294897B4	Rear: 460/85R38 R1W (18.4R38) (MI, FI, TR)			**In Base**
	7294786	Front: 380/85R28 R1W (14.9R28) (MI, FI, TR)			
75-W1533	7294893B4	Rear: 520/85R38 R1W (MI, FI, TR)			2,663.00
	7293763	Front: 420/85R28 R1W (MI, FI, TR)			
75-W1377	7294882B4	Rear: 480/80R42 R1W* (MI, TR, FI)			1,384.00
	7293764	Front: 380/85R30 R1W* (MI, TR, FI)			
75-W1388	7294884B4	Rear: 420/80R46 R1W (MI)			2,685.00
	7293763	Front: 420/85R28 R1W (MI)			
75-W1409	7294884B4	Rear: 420/80R46 R1W* (MI, FI)			2,064.00
	7293764	Front: 380/85R30 R1W* (MI, FI)			
75-W1318	7294883B4	Rear: 380/90R46 R1W* (MI, FI)			1,389.00
	7293764	Front: 380/85R30 R1W* (MI, FI)			
75-W1384	7294882B4	Rear: 480/80R42 R1W (MI, TR)			2,005.00
	7293763	Front: 420/85R28 R1W (MI, TR)			
		BAR AXLES- LONG			
		Rear: Dual Cast Inner / Steel Outer - Set of 4			
		Front: Waffle Wheel			
75-W1374	7294898B4	Duals: 460/85R38 R1W (18.4R38) (MI, TR)			6,965.00
	7294786	Front: 380/85R28 R1W (14.9R28) (MI, TR)			
75-W1379	7294887B4	Duals: 380/90R46 R1W (MI)			8,618.00
	7293764	Front: 380/85R30 R1W (MI)			
75-W1410	7294888B4	Duals: 420/80R46 R1W* (MI, FI)			9,552.00
	7293764	Front: 380/85R30 R1W* (MI, FI)			
75-W1471	7294888B4	Duals: 420/80R46 R1W (MI)			10,173.00
	7293763	Front: 420/85R28 R1W (MI)			
75-W1380	7294886B4	Duals: 480/80R42 R1W* (MI, TR)			7,910.00
	7293764	Front: 380/85R30 R1W* (MI, TR)			
75-W1386	7294886B4	Duals: 480/80R42 R1W (MI, TR)			8,531.00
	7293763	Front: 420/85R28 R1W (MI, TR)			
75-W1658	7294896B4	Duals: 520/85R38 R1W (MI)			8,851.00
	7293763	Front: 420/85R28 R1W (MI)			

*** FIRESTONE TREAD TYPE IS R1**

SUBJECT TO AVAILABILITY

(F.O.B. PORT OF ENTRY)

Order Code	Catalog Number	Description	Factory Code	Approx. Weight (lb.)	List Price

TIRES for 6615 & 6616 Dyna-VT

FRONT AND REAR TIRES - CONTINUED

		BAR AXLES- SHORT AND LONG			
		Rear: Single Welded Pressed Steel - Set of 2 ***Front: Fixed Welded Steel Rim***			
75-W1670	7294899B4 7294784B2	Rear: 540/65R38 R1W (MI, FI, TR) Front: 440/65R28 R1W (MI, FI, TR)			(656.00)
75-W1572	7294894B4 7293758B2	Rear: 600/65R38 R1W (MI, FI, TR) Front: 480/65R28 R1W (MI, FI, TR)			(93.00)
75-W1673	7294905B4 7294791B2	Rear: 540/80R38 (Nokian Industrial) Front: 440/80R28 (Nokian Industrial)			8,676.00
75-W1262	7294895B4 7294783B2	Rear: 650/65R38 R1W (MI, FI, TR) Front: 540/65R28 R1W (MI, FI, TR)			2,862.00
		Rear: Single Semi Dished Cast Centers- Set of 2 ***Front: Waffle Wheel***			
75-Base	7294897B4 7293762B2	Rear: 460/85R38 R1W (18.4R38) (MI, FI, TR) Front: 380/85R28 R1W (14.9R28) (MI, FI, TR)			**In Base**
75-W1533	7294893B4 7294762B2	Rear: 520/85R38 R1W (MI, FI, TR) Front: 420/85R28 R1W (MI, FI, TR)			2,663.00
75-W1377	7294882B4 7294765B2	Rear: 480/80R42 R1W* (MI, TR, FI) Front: 380/85R30 R1W* (MI, TR, FI)			1,384.00
75-W1620	7294882B4 7294769B2	Rear: 480/80R42 R1W (MI) Front: 320/85R34 R1W (MI)			2,111.00
75-W1548	7294883B4 7294769B2	Rear: 380/90R46 R1W (MI) Front: 320/85R34 R1W (MI)			2,116.00
75-W1388	7294884B4 7294762B2	Rear: 420/80R46 R1W (MI) Front: 420/85R28 R1W (MI)			2,685.00
75-W1409	7294884B4 7294765B2	Rear: 420/80R46 R1W* (MI, FI) Front: 380/85R30 R1W* (MI, FI)			2,064.00
75-W1624	7294884B4 7294769B2	Rear: 420/80R46 R1W (MI) Front: 320/85R34 R1W (MI)			2,791.00
75-W1318	7294883B4 7294765B2	Rear: 380/90R46 R1W* (MI, FI) Front: 380/85R30 R1W* (MI, FI)			1,389.00
75-W1394	7294885B4 7294769B2	Rear: 320/90R50 R1W (MI) Front: 320/85R34 R1W (MI)			2,539.00
75-W1384	7294882B4 7294762B2	Rear: 480/80R42 R1W (MI, TR) Front: 420/85R28 R1W (MI, TR)			2,005.00

*** FIRESTONE TREAD TYPE IS R1**

SUBJECT TO AVAILABILITY

MASSEY FERGUSON®

(F.O.B. PORT OF ENTRY)

TIRES for 6615 & 6616 Dyna-VT

FRONT AND REAR TIRES - CONTINUED

BAR AXLES- LONG

Rear: Dual Cast Inner / Steel Outer - Set of 4
Front: Waffle Wheel

Order Code	Catalog Number	Description	Factory Code	Approx. Weight (lb.)	List Price
75-W1374	7294898B4 7293762B2	Duals: 460/85R38 R1W (18.4R38) (MI, TR) Front: 380/85R28 R1W (14.9R28) (MI, TR)			6,965.00
75-W1395	7294889B4 7294769B2	Duals: 320/90R50 R1W (MI) Front: 320/85R34 R1W (MI)			9,591.00
75-W1549	7294887B4 7294769B2	Duals: 380/90R46 R1W (MI) Front: 320/85R34 R1W (MI)			9,345.00
75-W1379	7294887B4 7294765B2	Duals: 380/90R46 R1W (MI) Front: 380/85R30 R1W (MI)			8,618.00
75-W1625	7294888B4 7294769B2	Duals: 420/80R46 R1W (MI) Front: 320/85R34 R1W (MI)			10,279.00
75-W1410	7294888B4 7294765B2	Duals: 420/80R46 R1W* (MI, FI) Front: 380/85R30 R1W* (MI, FI)			9,552.00
75-W1471	7294888B4 7294762B2	Duals: 420/80R46 R1W (MI) Front: 420/85R28 R1W (MI)			10,173.00
75-W1621	7294886B4 7294769B2	Duals: 480/80R42 R1W (MI) Front: 320/85R34 R1W (MI)			8,637.00
75-W1380	7294886B4 7294765B2	Duals: 480/80R42 R1W* (MI, TR) Front: 380/85R30 R1W* (MI, TR)			7,910.00
75-W1386	7294886B4 7294762B2	Duals: 480/80R42 R1W (MI, TR) Front: 420/85R28 R1W (MI, TR)			8,531.00
75-W1658	7294896B4 7294762B2	Duals: 520/85R38 R1W (MI) Front: 420/85R28 R1W (MI)			8,851.00

*** FIRESTONE TREAD TYPE IS R1**

SUBJECT TO AVAILABILITY

6600 PREMIUM EDITION

Mississippi State Contract Discount: 22%

(F.O.B. PORT OF ENTRY)

Order Code	Catalog Number	Description	Factory Code	Approx. Weight (lb.)	List Price
PTO					
DYNA-6					
100-LC002	Base	Standard and Economy PTO Drive -2000 & 1550. . . . Engine RPM. Exchangeable Shaft PTO- 540 RPM 6 Spline + 1000 RPM 21 Spline			**In Base**
100-LC001	7293591	540 RPM 6 Spline & 1000 RPM 21 Spline . . . . . Exchangeable Shaft with No Economy			(917.00)
DYNA-VT					
100-Base	Base	540/540E/1000 RPM Flanged PTO with one 6 Spline Shaft and one 21 Spline Shaft, with In-Cab Controls			**In Base**
FRONT HITCH					
230-FA000	Base	Less Front Hitch			**In Base**
230-F1132	7293594	2800 kg. (6172 lbs.) Front Linkage with . . . . . 1 Set of Hydraulic Couplers			6,190.00
230-F1134	7293595	2800 kg. (6172 lbs.) Front Linkage with . . . . . 2 sets of Hydraulic Couplers			6,573.00
230-F1135	7293596	2800 kg. (6172 lbs.) Front Linkage with . . . . . 1 set of Hydraulic Couplers with Pressure Drain			6,338.00
LOADER PROVISION					
350-LL000	Base	Less Loader Provisions.			**In Base**
350-LL004	7293484	Front Loader Provisions including Hydraulics, ... Subframe. **(Requires Less Power Beyond- GR000 & Requires: Valves 1 and 2 Electric with a Joystick (KX012))**			5,853.00
CAB					
365-AF009	7294249	Radio, AM/FM, MP3 Compatible			(110.00)
125-AE042	7293546	Superluxe Grammar Seat			1,722.00
140-AI020	7293077	Standard Cab Roof with Roof Hatch			262.00
120-AQ001	7295100	Manual AC			(1,162.00)

SUBJECT TO AVAILABILITY

6600 PREMIUM EDITION

Mississippi State Contract Discount: 22%

MASSEY FERGUSON®

(F.O.B. PORT OF ENTRY)

Order Code	Catalog Number	Description	Factory Code	Approx. Weight (lb.)	List Price
FRONT WEIGHTS					
285-YA112	7293487	121 lbs. (55 kg.) Front Weights, Set of 12 . . . . . with Hardware - total Weight 1,455 lbs. (660 kg.)			2,228.00
REAR WHEEL WEIGHTS					
325-RD040	7294192*	551 lbs. (250 kg.) Weights, Set of 2 . . . . . Mounts Externally to Wheel		1102	1,791.00
325-RD041	7294200*	551 lbs. (250 kg.) Weights, Set of 4 . . . . . Mounts Externally to Wheel		2204	3,582.00
		***NOT COMPATIBLE WITH MANUAL ADJUST FLANGE AXLE RIMS**			
BELLY AND HITCH WEIGHTS					
245-YD001	7293374	1 Belly Weight - 584 lbs. (265 kg.) . . . . . (For use **WITHOUT** Front 3-Point Hitch)		584	1,447.00
245-YD001	7293375	1 Belly Weight - 397 lbs. (180 kg.) . . . . . (For use **WITH** Front 3-Point Hitch)		430	1,064.00
345-YB003	7294119	1873 lbs. (850 kg.) 3-Point HITCH Weight . . . . . (For use with Front 3-Point Hitch or Rear 3-Point Hitch without Quick Hitch Only if Rear Links are Hooks Style GC022)		1984	3,307.00
ELECTRICAL					
215-CB002	Base	Engine Block Heater - 110 Volt			**In Base**
215-CB000	7293593	Less Engine Block Heater.			(207.00)
LIGHTING					
205-VF013	7293103	Dual Roof-Mounted Rotating Beacons, Left and Right . (Includes SAE SMV sign)		1102	502.00
195-VG078	7295103	2 Front and 2 Rear Xenon Work Lights.. . . . . Xenon Bulb for Brighter Lights and Longer Bulb Life			3,293.00
360-VE019	7293476	Extremity Lighting . . . . . (Required with Long Bar Axle)			734.00

SUBJECT TO AVAILABILITY

6600 PREMIUM EDITION

Mississippi State Contract Discount: 22%

(F.O.B. PORT OF ENTRY)

Order Code	Catalog Number	Description	Factory Code	Approx. Weight (lb.)	List Price
PIVOTING FRONT FENDERS					
155-WE110	Base	Pivoting Front Fenders - Standard Width . . . . . Width depends on tire selection; see Chart Below			**In Base**
155-WE111	7293598	Pivoting Front Fenders - Wide Width . . . . . Width depends on tire selection; see Chart Below			116.00

Fender Size		
Standard	**Wide**	**Tire Sizes**
12.6" (320 mm)	13.9" (355 mm)	320/85R34 (12.4R34)
13.9" (355 mm)	14.9" (380 mm)	340/85R24 (13.6R24) 340/85R28 (13.6R28)
14.9" (380 mm)	16.1" (410 mm)	380/85R28 (14.9R28) 380/85R30 (14.9R30) 400/80R24 400/80R28
16.1" (410 mm)	18.5" (470 mm)	420/85R28 (16.9R28) 440/65R28
18.5" (470 mm)	20.4" (520 mm)	440/80R28 480/65R28
20.4" (520 mm)	24.4" (620 mm)	540/65R28

REAR FENDERS					
255-WD012	Base	Rear Fenders without Extensions, 78.74"(2.00 M) . . .			**In Base**
255-WD017	7293107	Wide Fender -90.55" (2.3 M) with Rear Extension . . .			1,272.00
255-WD020	7293109	Extra Wide Fender -100.4" (2.55 M) . . . . . with Rear Extension			1,421.00

SUBJECT TO AVAILABILITY

6600 PREMIUM EDITION

Mississippi State Contract Discount: 22%

MASSEY FERGUSON®

(F.O.B. PORT OF ENTRY)

Order Code	Catalog Number	Description	Factory Code	Approx. Weight (lb.)	List Price
MISCELLANEOUS					
35-EN001	7293092	Creeper Gear (4:1 Reduction). . . . . (**Available on Dyna-6 Editions Only**)			2,297.00
35-EN002	7293402	14:1 Super Creeper Reduction Gear . . . . . (**Available on Dyna-6 Editions Only**)			2,822.00
250-GS001	7293100	Hydraulic Trailer Brakes			785.00
250-GS062	7293551	Pneumatic Trailer Brakes			6,505.00
250-GS067	7293552	Pneumatic & Hydraulic			7,289.00
225-LQ001	7293553	Water Separator (Fuel Filter)			448.00
275-TC005	7294210	French Language OIB.			No Charge
275-TC011	7294211	Spanish Language OIB			No Charge
DEALER INSTALLED OPTIONS					
FRONT WEIGHTS					
	5020186M	8 x 55 KG (121 lbs.) Front Weights		968	1,485.00
	5020187M	10 x 55 KG (121 lbs.) Front Weights		1210	1,857.00
	5020188M	12 x 55 KG (121 lbs.) Front Weights		1452	2,228.00
	5020189M	14 x 55 KG (121 lbs.) Front Weights		1694	2,600.00

SUBJECT TO AVAILABILITY

RESERVED

SUBJECT TO AVAILABILITY

MASSEY FERGUSON®

MF7600 SERIES

7600 SERIES

MASSEY FERGUSON®

Beauvais Built

Dyna-4, Dyna-6, and Small Frame Dyna-VT
Possible Order Modifications in Weeks

	>9	7-9	5-6	
Auto-Guide™ 3000	o	X	X	Scheduled Completion Date
Front Axle/Rear Axle Type	o	X	X	
Air Conditioning/Heater	o	o	X	
Cab Audio	o	o	X	
Control Center Display (CCD)	o	o	X	
Front Fenders	o	o	X	
Front Weights	o	o	X	
Hydraulic & Pneumatic Trailer Brake	o	o	X	
Hydraulic Remotes	o	o	X	
Rear Fenders	o	o	X	
Rear Linkage & PTO	o	o	X	
Seat	o	o	X	
Wheels & Tires	o	o	X	
Working Lights & Mirrors	o	o	X	

Jackson Built

Possible Order Modifications in Weeks

	> 18	16 - 18	14 - 16	10 -14	6 - 10
Auto-Guide 3000	o	o	o	X	X
Front Axle/Rear Axle Type	o	0	X	X	X
Air Conditioning/Heater	o	o	o	X	X
Cab Audio	o	o	o	o	o
Control Center Display (CCD)	o	o	o	X	X
Front Fenders	o	o	o	o	o
Front Weights	o	o	o	o	o
Hydraulic/Pneumatic Trailer Brake	o	o	X	X	X
Hydraulic Remotes	o	o	o	X	X
Rear Fenders	o	o	o	X	X
Rear Linkage & PTO	o	o	X	X	X
Seat	o	o	o	X	X
Wheel & Tires	o	o	X	X	X
Working Lights & Mirrors	o	o	o	X	X

o = Components can be requested to be modified.
X = Components are frozen and cannot be modified.
*Dates subject to change without notice.

Guidelines for Availability and Order Changes

These charts list the possible change requests that can be made to the listed components through e-Ordering. The information provided is built off of the Scheduled Completion Date.

***Scheduled Completion Date; Not the Planned Available To Ship (PATS) Date**

Updates and Improvements

OCTOBER 2013

- Update of Jackson Built Modification Chart

AUGUST 2013

- Jackson built MF7600s can be ordered and shipped with dealer installed front suitcase weights from the factory, increasing order flexibility and front suitcase weight options.

MAY 2013

- The MF7600 models will feature a new right hand cab pillar beginning in Mid-June production.
- Deluxe version tractors can be ordered with 4 fingertip hydraulic remotes, an option previously reserved for Premium version models.
- The MF7600 features Auto-Guide™ 3000 , AGCO's new, fully integrated technology solution.
- Massey Ferguson 7600 Series tractors are now standard with AGCOMMAND Ready. The antenna, harness, and mounting bracket are installed at the factory.
- AGCO POWER Tier 4 Interim engines have lower low idle and working idle RPMs, reducing fuel consumption and noise levels.

Please refer to Bulletin MF13-17PMB "MF7600 Updates and Enhancements" for more information.

Serial Number Reference For Determining Model Year Code.

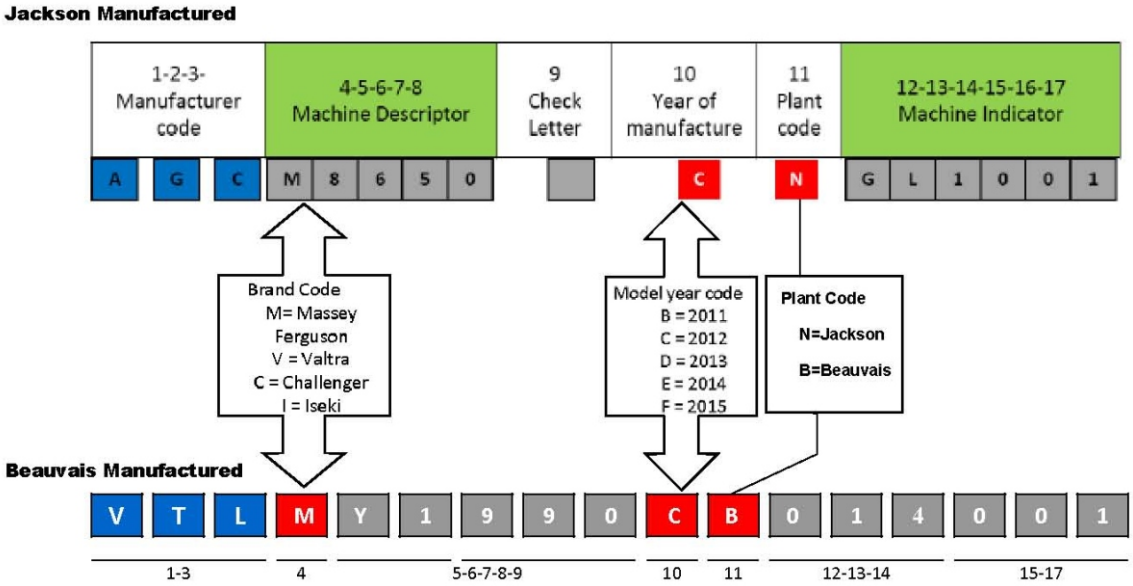

MASSEY FERGUSON®

7614 / 7615 / 7616 / 7618 SERIES

HIGH HORSEPOWER

7600 SMALL FRAME CLASSIC EDITION

Mississippi State Contract Discount: 22%

MASSEY FERGUSON®

(F.O.B. PORT OF ENTRY)

CLASSIC EDITION FEATURES

ENGINE

7614/7615/7616/7618

AGCO POWER 6.6L (403 cu in.) 6 Cylinder, Tier 4i Compliant
- e3 SCR Technology
- Air-to-Air Aftercooled, Common Rail Injection, Turbocharged

Electronic Engine Management (EEM) with Dual ERPM Settings
Electronic Controlled Viscous Fan Drive
Dual Element Dry Type Air Cleaner
Vertical Exhaust at Right Front Cab Post
Cooling System: Antifreeze to Minus 30F (-34C)
Fuel Tank Capacity: 82 Gal (310L)
DEF Tank Capacity: 8 Gal (30L)

POWERTRAIN

7614/7615: Dyna-4 Transmission
- 16F/16R Semi-Powershift, 4 Ranges with 4 Powershifts Per Range

7615/7616/7618: Dyna-6 Transmission
- 24F/24R Semi-Powershift, 4 Ranges with 6 Powershifts per Range

Multi-Disc Wet Brakes
Power Differential Lock
Independent PTO: 540/1000 RPM, 540 with 6 Spline Shaft, 1000 RPM with 21 Spline Shaft, Exchangeable Shafts
Rear Fender Mounted PTO Shut-Off
Flange Axles
Less SV1 & SV2 Settings

FRONT WHEEL ASSIST AXLE

Power Front Axle (PFA)
- 8 Bolt Pattern: 7614 Dyna-4/7615 Dyna-6
- 10 Bolt Pattern: 7615 Dyna-4/7616 and 7618 Dyna-6

Shielded Center Drive Line with Electro-Hydraulic Control & Front Wheel Drive Differential Lock
55 Degree Steering Angle

HYDRAULICS

Closed Center Load Sensing 29 GPM (110 L/Min) Pump
2900 PSI (200 Bar) Maximum Pressure
3 Mechanical Valves – Lever Controlled on Right Hand Console
Hydrostatic Power Steering

HITCH

3 Point Hitch: Category 2/3 Linkage Ball Ends
- Active Transport Control
- Lower Link Sensing
- Electronic Draft Control, Electronic Height Control, and Rate of Drop
- Variable Float Telescopic Stabilizers
- Left and Right Side External 3 Point Control

Drawbar: Category 2, Clevis and Drop Pin

ELECTRICAL SYSTEM

175 Amp Alternator
2 – 12V Batteries, 600 CCA Each (SAE)
7 Pin ASAE Rear Trailer Electrical Outlet
Electrical Isolator Switch and Jumpstart Point
110V Engine Block Heater
Ignition with Neutral Start and Key Shutoff

LIGHTING

8 Front Hood Mounted Lights
Four Front Single Bulb Worklights
Two Rear Double Bulb Worklights
Taillights, Flashing Warning Lights and Turn Signals

INSTRUMENTS

Tachometer: Digital and Analog
PTO Speed: Digital
Ground Speed Display: Digital
Fuel Level, DEF Level, and Coolant Temp Gauges
Warning/Information Lights

OPERATOR AREA

6 Post Cab
Transmission Control T-Handle on Right Hand Console
Adjustable Steering Column
Front Sun Visor
Air Conditioning and Heater
Air Suspended Seat - Manual Adjustment
Front and Rear Windshield Wiper/Washer
Dual Large Telescoping Outside Rear View Mirrors
Single Inside Rear View Mirror
2 Audio Speakers and Antenna
3 Pin 12V Power Outlets
12V Cigarette Lighter Style Power Outlet

WHEELS AND TIRES

Rear 460/85R38 R1W Single Wheels
Front 380/85R28 R1W Single Waffle Wheels

OTHER STANDARD FEATURES

AGCOMMAND Ready with Antenna, Bracket, and Harness (To Complete, See Technology Section)
Lockable Tool Box
SMV Sign
Molded Rear Fenders
English Literature

SUBJECT TO AVAILABILITY

7600 SMALL FRAME CLASSIC EDITION

Mississippi State Contract Discount: 23%

(F.O.B. PORT OF ENTRY)

Order Code	Catalog Number	Description	Approx. Weight (lb.)	List Price

ONE *ORDER CODE* FROM EACH GROUP MUST BE SPECIFIED. (Unless In Base Option is desired)

BASE MACHINE

DYNA-4 EDITIONS -- Beauvais Built

MF7614~D4~ES~01	7293646	Massey 7614 Classic Tractor 110 PTO HP	125,236.00
MF7615~D4~ES~01	7293647	Massey 7615 Classic Tractor 120 PTO HP	131,246.00

DYNA-6 EDITIONS -- Beauvais Built

MF7615~D6~ES~01	7293658	Massey 7615 Classic Tractor 110 PTO HP	127,676.00
MF7616~D6~ES~01	7293648	Massey 7616 Classic Tractor 120 PTO HP	133,686.00
MF7618~D6~ES~01	7293649	Massey 7618 Classic Tractor 130 PTO HP	139,696.00

TRANSMISSION OPTIONS FOR DYNA-4 EDITIONS

25-EA637	Base	4x4 Dyna-4 Transmission with 16F/16R gears.. . . . 25 MPH (40 KPH) with Dynamic Tractor Management (DTM)	**In Base**

TRANSMISSION OPTIONS FOR DYNA-6 EDITIONS

25-EA655	Base	6x4 Dyna-6 Transmission with 24F/24R gears. . . . 25 MPH (40 KPH) with Dynamic Tractor Management (DTM)	**In Base**
25-G1063	7293524	6X4 Dyna-6 Transmission with 24F/24R gears. . . . 31 MPH (50 KPH) with Dynamic Tractor Management (DTM). Also includes: High Pressure Brakes. (Not Compatible with Power Front Axle, NA030)	1,585.00

EQUIPMENT REQUIRED FOR NORTH AMERICA

	7293488	Instructional Seat	472.00
	7293489	Front Weight Carrier . . . . . . (Removed when factory installed front 3-Point Hitch is selected.)	304.00

SUBJECT TO AVAILABILITY

7600 SMALL FRAME CLASSIC EDITION

Mississippi State Contract Discount: 23%

MASSEY FERGUSON®

(F.O.B. PORT OF ENTRY)

Order Code	Catalog Number	Description	Approx. Weight (lb.)	List Price
AUXILIARY HYDRAULIC FLOW				
370-DP110	Base	29 gpm (110 L/min) Closed Center Load Sensing (CCLS) System		**In Base**
370-DP057	7293577*	15 gpm (57 L/min) Open Center System . . . . . (Requires Auxiliary Valve 1 & 2, KX006)		(4,559.00)
370-DP100	7293578*	26 gpm (100L/min) Twin Flow Open Center System . . (Requires Auxiliary Valve 1 & 2, KX006)		(3,571.00)
AUXILIARY VALVE 1 & 2				
50-KX010	Base	2 Mechanical Controlled Valves, ... Located on right hand console. (1st and 2nd - Flow Dividing, Kickout, Zero Leak, Float) (Requires DP110) (Requires MU003)		**In Base**
50-KX006	7293582	2 Mechanical Controlled Valves, ... Located on right hand console. (1st - Double Acting, Flow Dividing, Kickout, Zero Leak and 2nd - Single Acting/Double Acting, Zero Leak, Notch Float) (Requires DP057 or DP100) (Requires MU002 or MU011)		No Charge
AUXILIARY VALVE 3 & 4				
55-MU003	Base	3rd Mechanical Valve Only, ... Located on right hand console. (Kickout, Zero Leak, Flow Dividing, Float) (Requires DP110) (Requires KX010)		**In Base**
55-MU002	7293586	3rd Mechanical Valve Only, ... Located on right hand console. (Single Acting/Double Acting) (Requires DP057or DP100) (Requires KX006)		No Charge
55-MU011	7293587*	3rd and 4th Mechanical Valve, ... Located on right hand console. (3rd - Single Acting/Double Acting and 4th - Double Acting, Kickout, Float) (Requires DP100) (Requires KX006)		1,136.00

***IF 4TH VALVE REQUIRED FOR CCLS SYSTEM (DP110 - 29 GPM), ORDER 4378484M11 FIELD INSTALLED KIT FROM PARTS**

SUBJECT TO AVAILABILITY

Oil Catch				
380-GB020	In Base	With Oil Catch		**In Base**
380-GB000	7293664	Less Oil Catch. . . . . (Required for Dyna-4 when DP057 or DP100 is ordered)		**No Charge**

7600 SMALL FRAME CLASSIC EDITION

MASSEY FERGUSON® Mississippi State Contract Discount: 23%

(F.O.B. PORT OF ENTRY)

Order Code	Catalog Number	Description	Approx. Weight (lb.)	List Price
FRONT AXLE				
For 7615 Dyna-6				
65-NA030	Base	Non-Suspended Power Front Axle . . . . . (Not available with 31 MPH (50 KPH) Dyna-6 Transmission)		**In Base**
65-NA032	7293408	Suspended Power Front Axle . . . . . (Required with 31 MPH (50 KPH) Transmission, G1063)		6,898.00
For 7616 / 7618 Dyna-6				
65-NA030	Base	Non-Suspended Power Front Axle . . . . . (Not available with 31 MPH (50 KPH) Dyna-6 Transmission)		**In Base**
65-NA032	7293347*	Suspended Power Front Axle . . . . . (Required with 31 MPH (50 KPH) Transmission, G1063)		6,898.00
		*** SUSPENDED FRONT AXLE NOT AVAILABLE WITH DYNA-4 TRANSMISSION**		
REAR AXLE				
60-EE400	Base	Flange Axle		**In Base**
60-EE402	7293024	Short Bar Rear Axle, 80 in. (2028mm) Long, ... 3.23 in (82mm) Diameter		604.00
60-EE404	7293025	Long Bar Rear Axle, 3.23 in (82mm) Diameter, ... 105 in (2672mm) Long . . . . . (Requires: Extremity Lights VE019)		1,340.00
REAR 3-POINT HITCH				
95-GC009	Base	Category 2/3 Telescopic Ball End Links.		**In Base**
95-GC022	7293572	Category 3 Hook End Links and Cat 2/3 Balls and Cones		No Charge
95-GC026	7293573	Category 3 Hook End Links, with Hydraulic Top Link . . and Cat 3/3 and Cat 2/3 Balls and Cones.		865.00
REAR THREE POINT STABILIZERS				
165-YG001	Base	Variable Float Telescopic Stabilizers		**In Base**
165-YG006	7293403	Rub Block Stabilizers . . . . . (Requires: Category 2/3 Telescopic Ball End Links, GC009)		640.00
165-YG009	7293574	Automatic Stabilizers		328.00
INSTRUMENT PANEL / CONTROL CENTER DISPLAY (CCD)				
175-BA005	Base	Analog and Digital Instrument Panel w/o Radar or Slip . Control. No Control Center Display (CCD).		**In Base**
175-BA003	7293084	Analog and Digital Instrument Panel with Radar . . . . (For Actual Ground Speed) and Slip Control. No Control Center Display (CCD).		808.00

SUBJECT TO AVAILABILITY

(F.O.B. PORT OF ENTRY)

Order Code	Catalog Number	Description	Approx. Weight (lb.)	List Price

TIRES for 7614 Dyna-4

TIRE BRAND SELECTION

70-Blank	7294212	Factory Brand Choice		No Charge
70-T0001	7294195	Michelin Brand Required		1,552.00
70-T0007	7294197	Firestone Brand Required		1,158.00
70-T0010	7294198	Trelleborg Brand Required		1,158.00

FRONT AND REAR TIRES

FLANGE AXLE*

Rear: Single Pressed Steel Manual Adjust - Set of 2
Front: Waffle Wheel

75-Base	7292864 7294786	Rear: 460/85R38 R1W (MI, FI, TR) Front: 380/85R28 R1W (MI, FI, TR)		**In Base**
75-W1309	7292865 7293763	Rear: 520/85R38 R1W (MI, FI, TR) Front: 420/85R28 R1W (MI, FI, TR)		1,357.00
75-W1662	7292861 7293760	Rear: 460/85R30 R1W (MI, FI) Front: 340/85R24 R1W (MI, FI)		(2,036.00)
75-W1663	7292862 7293761	Rear: 460/85R34 R1W (MI, FI, TR) Front: 340/85R28 R1W (MI, FI, TR)		(1,692.00)
75-W1664	7292863 7293761	Rear: 420/85R38 R1W (MI, FI, TR) Front: 340/85R28 R1W (MI, FI, TR)		(1,644.00)

Rear: Single Welded Pressed Steel - Set of 2
Front: Fixed Welded Steel Rim

75-W1478	7292873 7293769	Rear: 540/80R38 (Nokian Industrial) Front: 440/80R28 (Nokian Industrial)		10,060.00
75-W1476	7292871 7293767	Rear: 480/80R34 Industrial (Nokian Industrial) Front: 400/80R24 Industrial(Nokian Industrial)		5,810.00
75-W1511	7292872 7293768	Rear: 480/80R38 Industrial (Nokian Industrial) Front: 400/80R28 Industrial (Nokian Industrial)		7,873.00
75-W1286	7292858 7293757	Rear: 540/65R38 R1W (MI, FI, TR) Front: 440/65R28 R1W (MI, FI, TR)		681.00
75-W1257	7292859 7294785	Rear: 600/65R38 R1W (MI, FI, TR) Front: 480/65R28 R1W (MI, FI, TR)		1,369.00
75-W1258	7292860 7293759	Rear: 650/65R38 R1W (MI, FI, TR) Front: 540/65R28 R1W (MI, FI, TR)		4,246.00

*** FIRESTONE TREAD TYPE IS R1**

SUBJECT TO AVAILABILITY

7600 SMALL FRAME CLASSIC EDITION

MASSEY FERGUSON®

Mississippi State Contract Discount: 23%

(F.O.B. PORT OF ENTRY)

Order Code	Catalog Number	Description	Approx. Weight (lb.)	List Price
		TIRES for 7614 Dyna-4		
		BAR AXLES- SHORT AND LONG		
		Rear: Single Welded Pressed Steel - Set of 2		
		Front: Fixed Welded Steel Rim		
75-W1677	7294903B5	Rear: 480/80R34 Industrial (Nokian Industrial)		6,249.00
	7293767	Front: 400/80R24 Industrial (Nokian Industrial)		
75-W1670	7294899B5	Rear: 540/65R38 R1W (MI, FI, TR)		737.00
	7293757	Front: 440/65R28 R1W (MI, FI, TR)		
75-W1672	7294904B5	Rear: 480/80R38 Industrial (Nokian Industrial)		7,627.00
	7293768	Front: 400/80R28 Industrial (Nokian Industrial)		
75-W1572	7294894B5	Rear: 600/65R38 R1W (MI, FI, TR)		1,301.00
	7294785	Front: 480/65R28 R1W (MI, FI, TR)		
75-W1673	7294905B5	Rear: 540/80R38 (Nokian Industrial)		10,070.00
	7293769	Front: 440/80R28 (Nokian Industrial)		
75-W1262	7294895B5	Rear: 650/65R38 R1W (MI, FI, TR)		4,255.00
	7293759	Front: 540/65R28 R1W (MI, FI, TR)		
		Rear: Single Semi Dished Cast Centers- Set of 2		
		Front: Waffle Wheel		
75-W1300	7294897B5	Rear: 460/85R38 R1W (18.4R38) (MI, FI, TR)		1,394.00
	7294786	Front: 380/85R28 R1W (14.9R28) (MI, FI, TR)		
75-W1318	7294883B5	Rear: 380/90R46 R1W* (MI, FI)		2,782.00
	7293764	Front: 380/85R30 R1W* (MI, FI)		
75-W1409	7294884B5	Rear: 420/80R46 R1W* (MI, FI)		3,458.00
	7293764	Front: 380/85R30 R1W* (MI, FI)		
75-W1388	7294884B5	Rear: 420/80R46 R1W (MI)		4,079.00
	7293763	Front: 420/85R28 R1W (MI)		
75-W1377	7294882B5	Rear: 480/80R42 R1W* (MI, TR, FI)		2,778.00
	7293764	Front: 380/85R30 R1W* (MI, TR, FI)		
75-W1384	7294882B5	Rear: 480/80R42 R1W (MI, TR)		3,399.00
	7293763	Front: 420/85R28 R1W (MI, TR)		
75-W1533	7294893B5	Rear: 520/85R38 R1W (MI, FI, TR)		4,056.00
	7293763	Front: 420/85R28 R1W (MI, FI, TR)		
		BAR AXLES- LONG		
		Rear: Dual Cast Inner / Steel Outer - Set of 4		
		Front: Waffle Wheel		
75-W1374	7294898B5	Duals: 460/85R38 R1W (MI, TR)		8,358.00
	7294786	Front: 380/85R28 R1W (MI, TR)		
75-W1379	7294887B5	Duals: 380/90R46 R1W (MI)		10,012.00
	7293764	Front: 380/85R30 R1W (MI)		
75-W1410	7294888B5	Duals: 420/80R46 R1W* (MI, FI)		10,946.00
	7293764	Front: 380/85R30 R1W* (MI, FI)		
75-W1471	7294888B5	Duals: 420/80R46 R1W (MI)		11,567.00
	7293763	Front: 420/85R28 R1W (MI)		
75-W1380	7294886B5	Duals: 480/80R42 R1W* (MI, TR, FI)		9,304.00
	7293764	Front: 380/85R30 R1W* (MI, TR, FI)		
75-W1386	7294886B5	Duals: 480/80R42 R1W (MI, TR)		9,925.00
	7293763	Front: 420/85R28 R1W (MI, TR)		
75-W1658	7294896B5	Duals: 520/85R38 R1W (MI)		10,244.00
	7293763	Front: 420/85R28 R1W(MI)		

*** FIRESTONE TREAD TYPE IS R1**

SUBJECT TO AVAILABILITY

(F.O.B. PORT OF ENTRY)

TIRES for 7615 Dyna-6

FRONT AND REAR TIRES - CONTINUED

Order Code	Catalog Number	Description	Approx. Weight (lb.)	List Price
		FLANGE AXLE*		
		Rear: Single Pressed Steel Manual Adjust - Set of 2		
		Front: Waffle Wheel		
75-Base	7292864	Rear: 460/85R38 R1W (MI, FI, TR)		**In Base**
	7294786	Front: 380/85R28 R1W (MI, FI, TR)		
75-W1309	7292865	Rear: 520/85R38 R1W (MI, FI, TR)		1,357.00
	7293763	Front: 420/85R28 R1W (MI, FI, TR)		
		Rear: Single Welded Pressed Steel - Set of 2		
		Front: Fixed Welded Steel Rim		
75-W1478	7292873	Rear: 540/80R38 (Nokian Industrial)		10,060.00
	7293769	Front: 440/80R28 (Nokian Industrial)		
75-W1286	7292858	Rear: 540/65R38 R1W (MI, FI, TR)		681.00
	7293757	Front: 440/65R28 R1W (MI, FI, TR)		
75-W1257	7292859	Rear: 600/65R38 R1W (MI, FI, TR)		1,369.00
	7294785	Front: 480/65R28 R1W (MI, FI, TR)		
75-W1258	7292860	Rear: 650/65R38 R1W (MI, FI, TR)		4,246.00
	7293759	Front: 540/65R28 R1W (MI, FI, TR)		
		BAR AXLES- SHORT AND LONG		
		Rear: Single Welded Pressed Steel - Set of 2		
		Front: Fixed Welded Steel Rim		
75-W1670	7294899B5	Rear: 540/65R38 R1W (MI, FI, TR)		737.00
	7293757	Front: 440/65R28 R1W (MI, FI, TR)		
75-W1572	7294894B5	Rear: 600/65R38 R1W (MI, FI, TR)		1,301.00
	7294785	Front: 480/65R28 R1W (MI, FI, TR)		
75-W1673	7294905B5	Rear: 540/80R38 (Nokian Industrial)		10,070.00
	7293769	Front: 440/80R28 (Nokian Industrial)		
75-W1262	7294895B5	Rear: 650/65R38 R1W (MI, FI, TR)		4,255.00
	7293759	Front: 540/65R28 R1W (MI, FI, TR)		

*** FIRESTONE TREAD TYPE IS R1**

SUBJECT TO AVAILABILITY

(F.O.B. PORT OF ENTRY)

TIRES for 7615 Dyna-6

FRONT AND REAR TIRES - CONTINUED

Order Code	Catalog Number	Description	Approx. Weight (lb.)	List Price
		BAR AXLES- SHORT AND LONG		
		Rear: Single Semi Dished Cast Centers- Set of 2		
		Front: Waffle Wheel		
75-W1300	7294897B5 7294786	Rear: 460/85R38 R1W (18.4R38) (MI, FI, TR) Front: 380/85R28 R1W (14.9R28) (MI, FI, TR)		1,394.00
75-W1318	7294883B5 7293764	Rear: 380/90R46 R1W* (MI, FI) Front: 380/85R30 R1W* (MI, FI)		2,782.00
75-W1409	7294884B5 7293764	Rear: 420/80R46 R1W* (MI, FI) Front: 380/85R30 R1W* (MI, FI)		3,458.00
75-W1388	7294884B5 7293763	Rear: 420/80R46 R1W (MI) Front: 420/85R28 R1W (MI)		4,079.00
75-W1377	7294882B5 7293764	Rear: 480/80R42 R1W* (MI, TR, FI) Front: 380/85R30 R1W* (MI, TR, FI)		2,778.00
75-W1384	7294882B5 7293763	Rear: 480/80R42 R1W (MI, TR) Front: 420/85R28 R1W (MI, TR)		3,399.00
75-W1533	7294893B5 7293763	Rear: 520/85R38 R1W (MI, FI, TR) Front: 420/85R28 R1W (MI, FI, TR)		4,056.00
		BAR AXLES- LONG		
		Rear: Dual Cast Inner / Steel Outer - Set of 4		
		Front: Waffle Wheel		
75-W1374	7294898B5 7294786	Duals: 460/85R38 R1W (MI, TR) Front: 380/85R28 R1W (MI, TR)		8,358.00
75-W1379	7294887B5 7293764	Duals: 380/90R46 R1W (MI) Front: 380/85R30 R1W (MI)		10,012.00
75-W1410	7294888B5 7293764	Duals: 420/80R46 R1W* (MI, FI) Front: 380/85R30 R1W* (MI, FI)		10,946.00
75-W1471	7294888B5 7293763	Duals: 420/80R46 R1W (MI) Front: 420/85R28 R1W (MI)		11,567.00
75-W1380	7294886B5 7293764	Duals: 480/80R42 R1W* (MI, TR, FI) Front: 380/85R30 R1W* (MI, TR, FI)		9,304.00
75-W1386	7294886B5 7293763	Duals: 480/80R42 R1W (MI, TR) Front: 420/85R28 R1W (MI, TR)		9,925.00
75-W1658	7294896B5 7293763	Duals: 520/85R38 R1W (MI) Front: 420/85R28 R1W (MI)		10,244.00

*** FIRESTONE TREAD TYPE IS R1**

SUBJECT TO AVAILABILITY

(F.O.B. PORT OF ENTRY)

Order Code	Catalog Number	Description	Approx. Weight (lb.)	List Price

TIRES for 7615 Dyna-4 and 7616 & 7618 Dyna-6

FRONT AND REAR TIRES

		FLANGE AXLE*		
		Rear: Single Pressed Steel Manual Adjust - Set of 2		
		Front: Waffle Wheel		
75-Base	7292864 7293762B2	Rear: 460/85R38 R1W (MI, FI, TR) Front: 380/85R28 R1W (MI, FI, TR)		**In Base**
75-W1309	7292865 7294762B2	Rear: 520/85R38 R1W (MI, FI, TR) Front: 420/85R28 R1W (MI, FI, TR)		1,357.00
		Rear: Single Welded Pressed Steel - Set of 2		
		Front: Fixed Welded Steel Rim		
75-W1478	7292873 7294791B2	Rear: 540/80R38 (Nokian Industrial) Front: 440/80R28 (Nokian Industrial)		10,060.00
75-W1286	7292858 7294784B2	Rear: 540/65R38 R1W (MI, FI, TR) Front: 440/65R28 R1W (MI, FI, TR)		681.00
75-W1257	7292859 7293758B2	Rear: 600/65R38 R1W (MI, FI, TR) Front: 480/65R28 R1W (MI, FI, TR)		1,369.00
75-W1258	7292860 7294783B2	Rear: 650/65R38 R1W (MI, FI, TR) Front: 540/65R28 R1W (MI, FI, TR)		4,246.00
		BAR AXLES- SHORT AND LONG		
		Rear: Single Welded Pressed Steel - Set of 2		
		Front: Fixed Welded Steel Rim		
75-W1670	7294899B5 7294784B2	Rear: 540/65R38 R1W (MI, FI, TR) Front: 440/65R28 R1W (MI, FI, TR)		737.00
75-W1572	7294894B5 7293758B2	Rear: 600/65R38 R1W (MI, FI, TR) Front: 480/65R28 R1W (MI, FI, TR)		1,301.00
75-W1673	7294905B5 7294791B2	Rear: 540/80R38 (Nokian Industrial) Front: 440/80R28 (Nokian Industrial)		10,070.00
75-W1262	7294895B5 7294783B2	Rear: 650/65R38 R1W (MI, FI, TR) Front: 540/65R28 R1W (MI, FI, TR)		4,255.00

*** FIRESTONE TREAD TYPE IS R1**

SUBJECT TO AVAILABILITY

7600 SMALL FRAME CLASSIC EDITION

Mississippi State Contract Discount: 23%

(F.O.B. PORT OF ENTRY)

Order Code	Catalog Number	Description	Approx. Weight (lb.)	List Price
		TIRES for 7615 Dyna-4 and 7616 & 7618 Dyna-6		
		BAR AXLES- SHORT AND LONG		
		Rear: Single Semi Dished Cast Centers- Set of 2		
		Front: Waffle Wheel		
75-W1300	7294897B5	Rear: 460/85R38 R1W (18.4R38) (MI, FI, TR)		1,394.00
	7293762B2	Front: 380/85R28 R1W (14.9R28) (MI, FI, TR)		
75-W1394	7294885B5	Rear: 320/90R50 R1W (MI)		3,932.00
	7294769B2	Front: 320/85R34 R1W (MI)		
75-W1548	7294883B5	Rear: 380/90R46 R1W (MI)		3,509.00
	7294769B2	Front: 320/85R34 R1W (MI)		
75-W1318	7294883B5	Rear: 380/90R46 R1W* (MI, FI)		2,782.00
	7294765B2	Front: 380/85R30 R1W* (MI, FI)		
75-W1624	7294884B5	Rear: 420/80R46 R1W (MI)		4,185.00
	7294769B2	Front: 320/85R34 R1W (MI)		
75-W1409	7294884B5	Rear: 420/80R46 R1W* (MI, FI)		3,458.00
	7294765B2	Front: 380/85R30 R1W* (MI, FI)		
75-W1388	7294884B5	Rear: 420/80R46 R1W (MI)		4,079.00
	7294762B2	Front: 420/85R28 R1W (MI)		
75-W1620	7294882B5	Rear: 480/80R42 R1W (MI)		3,505.00
	7294769B2	Front: 320/85R34 R1W (MI)		
75-W1377	7294882B5	Rear: 480/80R42 R1W* (MI, TR, FI)		2,778.00
	7294765B2	Front: 380/85R30 R1W* (MI, TR, FI)		
75-W1384	7294882B5	Rear: 480/80R42 R1W (MI, TR)		3,399.00
	7294762B2	Front: 420/85R28 R1W (MI, TR)		
75-W1533	7294893B5	Rear: 520/85R38 R1W (MI, FI, TR)		4,056.00
	7294762B2	Front: 420/85R28 R1W (MI, FI, TR)		
		BAR AXLES- LONG		
		Rear: Dual Cast Inner / Steel Outer - Set of 4		
		Front: Waffle Wheel		
75-W1374	7294898B5	Duals: 460/85R38 R1W (MI, TR)		8,358.00
	7293762B2	Front: 380/85R28 R1W (MI, TR)		
75-W1395	7294889B5	Duals: 320/90R50 R1W (MI)		10,985.00
	7294769B2	Front: 320/85R34 R1W (MI)		
75-W1549	7294887B5	Duals: 380/90R46 R1W (MI)		10,739.00
	7294769B2	Front: 320/85R34 R1W (MI)		
75-W1379	7294887B5	Duals: 380/90R46 R1W (MI)		10,012.00
	7294765B2	Front: 380/85R30 R1W (MI)		
75-W1625	7294888B5	Duals: 420/80R46 R1W (MI)		11,673.00
	7294769B2	Front: 320/85R34 R1W (MI)		
75-W1410	7294888B5	Duals: 420/80R46 R1W* (MI, FI)		10,946.00
	7294765B2	Front: 380/85R30 R1W* (MI, FI)		
75-W1471	7294888B5	Duals: 420/80R46 R1W (MI)		11,567.00
	7294762B2	Front: 420/85R28 R1W (MI)		
75-W1621	7294886B5	Duals: 480/80R42 R1W (MI)		10,031.00
	7294769B2	Front: 320/85R34 R1W (MI)		
75-W1380	7294886B5	Duals: 480/80R42 R1W* (MI, TR, FI)		9,304.00
	7294765B2	Front: 380/85R30 R1W* (MI, TR, FI)		
75-W1386	7294886B5	Duals: 480/80R42 R1W (MI, TR)		9,925.00
	7294762B2	Front: 420/85R28 R1W (MI, TR)		
75-W1658	7294896B5	Duals: 520/85R38 R1W (MI)		10,244.00
	7294762B2	Front: 420/85R28 R1W (MI)		

*** FIRESTONE TREAD TYPE IS R1**

SUBJECT TO AVAILABILITY

7600 SMALL FRAME CLASSIC EDITION

Mississippi State Contract Discount: 23%

MASSEY FERGUSON®

(F.O.B. PORT OF ENTRY)

Order Code	Catalog Number	Description	Approx. Weight (lb.)	List Price
PTO				
100-LC001	Base	540 RPM 6 Spline and1000 RPM 21 Spline Exchangeable Shaft with No Economy		**In Base**
100-LC002	7293068	540/540E/1000/1000E Exchangeable Shaft 540 RPM 6 Spline and 1000 RPM 21 Spline with Economy PTO		917.00
FRONT HITCH				
7614 / 7615 Dyna-4 / 7615 / 7616 / 7618 Dyna-6				
230-FA000	Base	Less Front Hitch		**In Base**
230-F1132	7293594	2800 KG Front Linkage w/ 1 Set of Hydraulic Couplers		6,190.00
230-F1134	7293595	2800 KG Front Linkage w/ 2 sets of Hydraulic Couplers		6,573.00
230-F1135	7293596	2800 KG Front Linkage with 1 set of Hydraulic Couplers with Pressure Drain		6,338.00
7618 Dyna- 6 Only				
230-FA000	Base	Less Front Hitch		**In Base**
230-F1120	7293366*	4000 KG Front Linkage w/ 1 Set of Hydraulic Couplers		7,042.00
230-F1121	7293368*	4000 KG Front Linkage w/ 2 sets of Hydraulic Couplers		8,076.00
230-F1129	7293565*	4000 KG Front Linkage with 1 set of Hydraulic Couplers with Pressure Drain		7,189.00

***4000 KG FRONT HITCH WILL NOT BE OFFERED AS A FIELD INSTALLED KIT - FACTORY ONLY**

LOADER PROVISION				
350-LL000	Base	Less Loader Provisions.		**In Base**
350-LL001	7293445	Front Loader Provision - Mech Loader Control, Including Hydraulics and Subframe (Not recommended with 15 gpm (57 L/min) Open Center System- DP057)		6,155.00
CAB				
365-AF009	7294248	Radio, AM/FM, MP3 Compatible		602.00
125-AE027	7293430	Air Suspended Seat - Automatic Adjustment		345.00
140-AI020	7293077	Standard Cab Roof with Roof Hatch		262.00
140-E1022	7293078	Visio roof		1,524.00
115-AM084	7293559	Mechanical Cab Suspension		1,639.00

SUBJECT TO AVAILABILITY

7600 SMALL FRAME CLASSIC EDITION

MASSEY FERGUSON®

Mississippi State Contract Discount: 23%

(F.O.B. PORT OF ENTRY)

Order Code	Catalog Number	Description	Approx. Weight (lb.)	List Price
FRONT WEIGHTS				
285-YA112	7293487	121 LBS (55 KGS) Front Weights, Set of 12 . . . . . with Hardware - total Weight 1,455 LBS (660 KGS)		2,228.00
REAR WHEEL WEIGHTS				
325-RD040	7294192*	551 LBS (250 KGS) Weights, Set of 2 . . . . . Mounts Externally to Wheel	1102	1,791.00
325-RD041	7294200*	551 LBS (250 KGS) Weights, Set of 4 . . . . . Mounts Externally to Wheel	2204	3,582.00
		***NOT COMPATIBLE WITH MANUAL ADJUST FLANGE AXLE RIMS**		
BELLY AND HITCH WEIGHTS				
245-YD001	7293374	1 Belly Weight - 584 LBS (265 KGS) . . . . . (For use **WITHOUT** Front 3-Point Hitch)	584	1,447.00
245-YD001	7293375	1 Belly Weight - 430 LBS (195 KGS) . . . . . (For use **WITH** Front 3-Point Hitch)	430	1,064.00
345-YB003	7294119	1873 LBS (850 KGS) 3-Point Hitch Weight . . . . . (For use with Front 3-Point Hitch or Rear 3-Point Hitch without Quick Hitch)	1984	3,307.00
ELECTRICAL				
215-CB002	Base	Engine Block Heater - 110 Volt		**In Base**
215-CB000	7293593	Less Engine Block Heater.		(207.00)
ALTERNATOR				
220-CE020	Base	175 AMP Alternator. . . . . (Not Available with ISOBUS.)		**In Base**
220-CE019	7293533	Twin 120 AMP Alternators.		380.00
LIGHTING				
205-VF013	7293103	Dual Roof-Mounted Rotating Beacons, Left and Right . (Includes SAE SMV sign)		502.00
195-VG078	7295103	2 Xenon and 2 Single Bulb Front Worklights, ... 2 Xenon Rear Worklights		3,293.00
360-VE019	7293476	Extremity Lighting . . . . . (Required with Long Bar Axle) (Not Compatible with Flange Axle)		734.00
190-VK004	7293597	Worklights on Handrails and Rear Fenders		522.00

SUBJECT TO AVAILABILITY

7600 SMALL FRAME CLASSIC EDITION

Mississippi State Contract Discount: 23%

MASSEY FERGUSON®

(F.O.B. PORT OF ENTRY)

Order Code	Catalog Number	Description	Approx. Weight (lb.)	List Price
PIVOTING FRONT FENDERS				
155-WE000	Base	Less Pivoting Front Fenders		**In Base**
155-WE110	7294204	Pivoting Front Fenders - Standard Width . . . . . Width depends on tire selection; see Chart Below		1,633.00

Fender Size		
Standard	**Wide**	**Tire Sizes**
320 mm	355 mm	320/85R34 (12.4R34)
355 mm	380 mm	340/85R24 (13.6R24) 340/85R28 (13.6R28)
380 mm	410 mm	380/85R28 (14.9R28) 380/85R30 (14.9R30) 400/80R24 400/80R28
410 mm	470 mm	420/85R28 (16.9R28) 440/65R28
470 mm	520 mm	440/80R28 480/65R28
520 mm	620 mm	540/65R28

REAR FENDERS				
255-WD012	Base	Rear Fenders without Extensions, 78.74"(2.00 M) . . .		**In Base**
255-WD017	7293107	Wide Fender- 90.55" (2.3 M) with Rear Extension . . .		1,272.00
255-WD020	7293109	Extra Wide Fender -100.4" (2.55 M) . . . . . with Rear Extension		1,421.00

SUBJECT TO AVAILABILITY

7600 SMALL FRAME CLASSIC EDITION

Mississippi State Contract Discount: 23%

(F.O.B. PORT OF ENTRY)

Order Code	Catalog Number	Description	Approx. Weight (lb.)	List Price
MISCELLANEOUS				
35-EN001	7293092	Creeper Gear (4:1 Reduction)		2,297.00
35-EN002	7293402	14:1:1 Super Creeper Reduction Gear		2,822.00
250-GS001	7293100	Hydraulic Trailer Brakes		785.00
250-GS062	7293551	Pneumatic Trailer Brakes		6,505.00
250-GS067	7293552	Pneumatic & Hydraulic Trailer Brakes		7,289.00
225-LQ001	7293553	Water Separator (Fuel Filter)		448.00
275-TC005	7294210	French Language OIB		No Charge
275-TC011	7294211	Spanish Language OIB		No Charge

DEALER INSTALLED OPTIONS

FRONT WEIGHTS

5020186M	8 x 55kg (121 lbs.) Front Weights	968	1,485.00
5020187M	10 x 55kg (121 lbs.) Front Weights	1210	1,857.00
5020188M	12 x 55kg (121 lbs.) Front Weights	1452	2,228.00
5020189M	14 x 55kg (121 lbs.) Front Weights	1694	2,600.00

SUBJECT TO AVAILABILITY

MASSEY FERGUSON®

RESERVED PAGE

7600 SMALL FRAME DELUXE EDITION

Mississippi State Contract Discount: 23%

(F.O.B. PORT OF ENTRY)

DELUXE EDITION FEATURES

ENGINE

7615/7616/7618

AGCO POWER 6.6L (403 cu in.) 6 Cylinder, Tier 4i Compliant
- e3 SCR Technology
- Air-to-Air Aftercooled, Common Rail Injection, Turbocharged

Electronic Engine Management (EEM) with Dual ERPM Settings
Electronic Controlled Viscous Fan Drive
Dual Element Dry Type Air Cleaner
Vertical Exhaust at Right Front Cab Post
Cooling System: Antifreeze to Minus 30F (-34°C)
Fuel Tank Capacity: 82 Gal (310L)
DEF Tank Capacity: 8 Gal (30L)

POWERTRAIN

7615/7616/7618: DYNA-VT
- Continuously Variable Transmission, 60 ft/h to 25 MPH (18.2 Meters/h to 40 KPH)
- Dynamic Tractor Management (DTM) with Two Programmable Cruise Speeds
- Short Bar Rear Axle, 90 In. (2277mm) Long, 3.74 in. (95mm) Diameter

7615/7616/7618: DYNA-6 TRANSMISSION
- 24F/24R Semi-Powershift, 4 Ranges with 6 Powershifts per Range
- Dynamic Tractor Management (DTM) with Two Programmable Cruise Speeds
- Short Bar Rear Axle, 80 In. (2028mm) Long, 3.23 In (82mm) Diameter

Multi-Disc Wet Brakes
Power Differential Lock
Independent PTO:
DYNA-VT: 540/540E/1000 RPM Flanged Shaft, 540 with 6 Spline and 1000 with 21 Spline
DYNA-6: 540/540E/1000/1000E Exchangeable Shaft, 540 with 6 Spline and 1000 with 21 Spline with Electric Control
Rear Fender Mounted PTO Shut-Off
SV1 & SV2 Settings

FRONT WHEEL ASSIST AXLE

Power Front Axle (PFA)
- 8 Bolt Pattern: 7615 Dyna-6 and Dyna-VT
- 10 Bolt Pattern: 7616 and 7618 Dyna-6 and Dyna-VT

Suspended Front Axle
Shielded Center Drive Line with Electro-Hydraulic Control & Front Wheel Drive Differential Lock
55 Degree Steering Angle
SpeedSteer

HYDRAULICS

Closed Center Load Sensing 29 gpm (110 L/Min) Pump
2900 PSI (200 Bar) Maximum Pressure
2 Electric Valves - Fingertip Controlled on Armrest, 2 Mechanical Valves – Lever Controlled on Right Hand Console
Hydrostatic Power Steering
Power Beyond

HITCH

3 Point Hitch: Category 2/3 Linkage Ball Ends
- Active Transport Control
- Lower Link Sensing
- Electronic Draft Control, Electronic Height Control, and Rate of Drop
- Variable Float Telescopic Stabilizers
- Left and Right Side External 3 Point Control

Drawbar: Category 2, Clevis and Drop Pin

ELECTRICAL SYSTEM

2 – 120 Amp Alternators
2 – 12V Batteries, 600 CCA Each (SAE)
7 Pin ASAE Rear Trailer Electrical Outlet
Electrical Isolator Switch and Jumpstart Point
110V Engine Block Heater
Ignition with Neutral Start and Key Shutoff

LIGHTING

8 Front Hood Mounted Lights
Four Front Single Bulb Worklights
Two Rear Double Bulb Worklights
Two Field Lights on Hand Rails and Rear Fenders with Taillights, Flashing Warning Lights, and Turn Signals

INSTRUMENTS

Control Center Display (CCD)
- Video Input
- Electric Valve Control
- ISOBUS Compliant

Radar with Slip Control
Tachometer: Digital and Analog
PTO Speed: Digital
Ground Speed Display: Digital
Fuel Level, DEF Level, and Coolant Temp Gauges
Warning/Information Lights

OPERATOR AREA

OptiRide Cab Suspension
6 Post Cab
Transmission Control T-Handle on Armrest
Adjustable Steering Column
Front Sun Visor
Air Conditioning and Heater
Air Suspended Seat - Automatic Adjustment
Front and Rear Windshield Wiper/Washer
Dual Large Telescoping Outside Rear View Mirrors
Single Inside Rear View Mirror
Radio with AM/FM/CD/MP3/Bluetooth and 2 Audio Speakers and Antenna
3 Pin 12V Power Outlet
12V Cigarette Lighter Style Power Outlet
ISO 11783 9-Pin in Cab Connector
ISO 11786 7-Pin in Cab Connector

WHEELS AND TIRES

Rear 460/85R38 R1W Single Wheels
Front 380/85R28 R1W Single Waffle Wheels

OTHER STANDARD FEATURES

Auto-Steer Ready
AGCOMMAND Ready with Antenna, Bracket, and Harness (To Complete, See Technology Section)
Lockable Tool Box
SMV Sign
Molded Rear Fenders
English Literature

SUBJECT TO AVAILABILITY

7600 SMALL FRAME DELUXE EDITION

Mississippi State Contract Discount: 23%

MASSEY FERGUSON®

(F.O.B. PORT OF ENTRY)

Order Code	Catalog Number	Description	Approx. Weight (lb.)	List Price

ONE *ORDER CODE* FROM EACH GROUP MUST BE SPECIFIED. (Unless In Base Option is desired)

BASE MACHINE

DYNA-6 EDITIONS-- Beauvais Built

MF7615~D6~EF~01	7293659	Massey 7615 Deluxe Tractor 110 PTO HP	153,086.00
MF7616~D6~EF~01	7293650	Massey 7616 Deluxe Tractor 120 PTO HP	159,096.00
MF7618~D6~EF~01	7293651	Massey 7618 Deluxe Tractor 130 PTO HP	165,106.00

DYNA-VT EDITIONS-- Beauvais Built

MF7615~DV~EF~01	7293661	Massey 7615 Deluxe Tractor 110 PTO HP	164,119.00
MF7616~DV~EF~01	7293654	Massey 7616 Deluxe Tractor 120 PTO HP	170,129.00
MF7618~DV~EF~01	7293655	Massey 7618 Deluxe Tractor 130 PTO HP	176,139.00

TRANSMISSION OPTIONS FOR DYNA-6 EDITIONS

25-EA655	Base	6x4 Dyna-6 Transmission with 24F/24R gears. . . . 25 MPH (40 KPH) with Dynamic Tractor Management (DTM)	**In Base**
25-G1063	7293524	6X4 Dyna-6 Transmission with 24F/24R gears. . . . 31 MPH (50 KPH) with Dynamic Tractor Management (DTM). Also includes: High Pressure Brakes. (Not Compatible with Power Front Axle, NA030)	1,585.00

TRANSMISSION OPTIONS FOR DYNA-VT EDITIONS

25-EA621	Base	Dyna-VT Transmission - 25 MPH (40 KPH)	**In Base**
25-EA622*	7293525	Dyna-VT Transmission - 31 MPH (50 KPH) . . . . . (Not Compatible with Power Front Axle, NA030)	775.00

***Suspended Front Axle Recommends 50 kph Transmission**

EQUIPMENT REQUIRED FOR NORTH AMERICA

	7293488	Instructional Seat	472.00
	7293489	Front Weight Carrier . . . . . . (Removed when factory installed front 3-Point Hitch is selected.)	304.00

SUBJECT TO AVAILABILITY

7600 SMALL FRAME DELUXE EDITION

Mississippi State Contract Discount: 23%

(F.O.B. PORT OF ENTRY)

Order Code	Catalog Number	Description	Approx. Weight (lb.)	List Price
AUXILIARY VALVE 1 & 2				
50-KX011	Base	Valves 1 and 2 Electric, Fingertip Controlled Spool Valves Fingertips Located in Armrest		**In Base**
50-KX012	7293530	Valves 1 and 2 Electric, with Multifunction Joystick on the Armrest (Required when Choosing Factory Installed Loader Provisions (LL004))		No Charge
TO UTILIZE THE FACTORY INSTALLED MULTIFUNCTION JOYSTICK WITH A LOADER, THE TRACTOR MUST BE EQUIPPED WITH THE LOADER PROVISIONS FROM THE FACTORY.				
AUXILIARY VALVE 3 & 4				
55-MU012	Base	3rd and 4th Mechanically Controlled Valves, ... with levers located in Right Hand Console Kickout, Zero Leak, Flow Dividing, Float		**In Base**
55-MU003	7293532	3rd Valve only, Mechanically Controlled. . . . . . with lever located in Right Hand Console Kickout, Zero Leak, Flow Dividing, Float		(1,136.00)
55-MU031	7293676	3rd and 4th Electric, Fingertip Controlled Valves . . . . with Fingertips located on Right Hand Console		1,318.00
POWER BEYOND				
90-GR010	Base	Power Beyond Couplers P/T/LS/D		**In Base**
90-GR000	7293665	Less Power Beyond . . . . . . (Only available with Front Loader Provision LL004)		(716.00)
FRONT AXLE				
For 7615				
65-Base	Base*	Suspended Power Front Axle		**In Base**
65-NA030	7295101	Non-Suspended Power Front Axle . . . . . . (Not available with 31 MPH (50 KPH) Dyna-6 or Dyna-VT Transmissions)		(6,898.00)
For 7616 / 7618				
65-Base	Base*	Suspended Power Front Axle		**In Base**
65-NA030	7293599	Non-Suspended Power Front Axle . . . . . . (Not available with 31 MPH (50 KPH) Dyna-6 or Dyna-VT Transmissions)		(6,898.00)
***Suspended Front Axle Recommends 50 kph Transmission**				
REAR AXLE				
DYNA-6				
60-EE402	Base	Short Bar Rear Axle, 80 in. (2028mm) Long, 3.23 in (82mm) Diameter		**In Base**
60-EE400	7293027	Flange Axle		(456.00)
60-EE404	7293026	Long Bar Rear Axle, 3.23 in (82mm) Diameter, ... 105 in (2672mm) Long (Requires Extremity Lights VE019)		898.00
DYNA-VT				
60-EE402	Base	Short Bar Rear Axle, 90 in. (2277mm) Long, ... 3.74 in. (95mm) Diameter		**In Base**
60-EE404	7293131	Long Bar Rear Axle, 118 in. (2997mm) long, ... 3.74 in. (95mm) Diameter (Requires Extremity Lights VE019)		898.00
REAR 3-POINT HITCH				
95-GC009	Base	Category 2/3 Telescopic Ball End Links.		**In Base**
95-GC022	7293572*	Category 3 Hook End Links and Cat 2/3 Balls and Cones		No Charge
95-GC026	7293573*	Category 3 Hook End Links, with Hydraulic Top Link . . and Cat 3/3 and Cat 2/3 Balls and Cones.		865.00

***Not Available with Dyna-VT Transmission**

SUBJECT TO AVAILABILITY

7600 SMALL FRAME DELUXE EDITION

Mississippi State Contract Discount: 23%

MASSEY FERGUSON®

(F.O.B. PORT OF ENTRY)

Order Code	Catalog Number	Description	Approx. Weight (lb.)	List Price
REAR THREE POINT STABILIZERS				
165-YG001	Base	Variable Float Telescopic Stabilizers		Base
165-YG006	7293403*	Rub Block Stabilizers . . . . . (Requires Category 2/3 Telescopic Ball End Links, GC009)		640.00
165-YG009	7293574*	Automatic Stabilizers		328.00
		***Not Available with Dyna-VT Transmission**		
INSTRUMENT PANEL / CONTROL CENTER DISPLAY (CCD)				
LESS AUTO-STEERING READY				
175-BA003	7293556	Analog and Digital Instrument Panel with Radar . . . . (For Actual Ground Speed) and Slip Control. No Control Center Display (CCD).		(5,119.00)
175-BA005	7293557	Analog and Digital Instrument Panel w/o Radar or Slip . Control. No Control Center Display (CCD).		(5,927.00)
175-BA008	7293563	Analog and Digital Instrument Panel, Control Center . . Display (CCD) with Video Input, Electric Valve Control, Radar with Slip Control and ISOBUS.		(145.00)
AUTO-STEERING READY				
175-Base	Base*	Analog and Digital Instrument Panel, Control Center . . Display (CCD) with Video Input, Electric Valve Control, Radar with Slip Control and ISOBUS. *Order Auto-Guide™ 3000 TopDock Separately* *See Technology Section*		**In Base**
175-BA016	7293538*	Analog and Digital Instrument Panel, Radar with Slip . . Control, Auto-Steering Ready. No Control Center Display (CCD). *Order Auto-Guide™ 3000 TopDock Separately* *See Technology Section*		(4,659.00)
		*Includes Roof Plate and Wiring Harness		

Note: The Control Center Display (CCD) is required to utilize Auto-Guide™ 3000.

AUTO-STEERING COMPLETE

175-BA021	7293677	Analog and Digital Instrument Panel, Control Center . . Display (CCD) with Video Input, Electric Valve Control, and ISOBUS. Radar with Slip Control. Auto-Guide™ 3000 Sub-Meter (WAAS and OmniStar VBS) Auto Steering System. (Requires SpeedSteer) Auto-Guide™ 3000 uses the Control Center Display (CCD).		6,035.00

SUBJECT TO AVAILABILITY

SPEEDSTEER				
185-AD004	Base	SpeedSteer Option		**In Base**
185-AD002	7293558	Less SpeedSteer . . . . . (Not Available with Base, BA021 or BA016 Instrument Control Panel)		(900.00)

(F.O.B. PORT OF ENTRY)

Order Code	Catalog Number	Description	Approx. Weight (lb.)	List Price

TIRES for 7615

TIRE BRAND SELECTION

70-Blank	7294212	Factory Brand Choice	No Charge
70-T0001	7294195	Michelin Brand Required	1,552.00
70-T0007	7294197	Firestone Brand Required	1,158.00
70-T0010	7294198	Trelleborg Brand Required	1,158.00

FRONT AND REAR TIRES

FLANGE AXLE*

Rear: Single Pressed Steel Manual Adjust - Set of 2
Front: Waffle Wheel

75-W1297	7292864B1 7294786	Rear: 460/85R38 R1W (MI, FI, TR) Front: 380/85R28 R1W (MI, FI, TR)	(1,394.00)
75-W1309	7292865B1 7293763	Rear: 520/85R38 R1W (MI, FI, TR) Front: 420/85R28 R1W (MI, FI, TR)	(37.00)

Rear: Single Welded Pressed Steel - Set of 2
Front: Fixed Welded Steel Rim

75-W1478	7292873B1 7293769	Rear: 540/80R38 (Nokian Industrial) Front: 440/80R28 (Nokian Industrial)	8,667.00
75-W1286	7292858B1 7293757	Rear: 540/65R38 R1W (MI, FI, TR) Front: 440/65R28 R1W (MI, FI, TR)	(713.00)
75-W1257	7292859B1 7294785	Rear: 600/65R38 R1W (MI, FI, TR) Front: 480/65R28 R1W (MI, FI, TR)	(25.00)
75-W1258	7292860B1 7293759	Rear: 650/65R38 R1W (MI, FI, TR) Front: 540/65R28 R1W (MI, FI, TR)	2,852.00

Flange Axles are not compatible with Dyna-VT Transmissions

BAR AXLES- SHORT AND LONG

Rear: Single Welded Pressed Steel - Set of 2
Front: Fixed Welded Steel Rim

75-W1670	7294899B4 7293757	Rear: 540/65R38 R1W (MI, FI, TR) Front: 440/65R28 R1W (MI, FI, TR)	(656.00)
75-W1572	7294894B4 7294785	Rear: 600/65R38 R1W (MI, FI, TR) Front: 480/65R28 R1W (MI, FI, TR)	(93.00)
75-W1673	7294905B4 7293769	Rear: 540/80R38 (Nokian Industrial) Front: 440/80R28 (Nokian Industrial)	8,676.00
75-W1262	7294895B4 7293759	Rear: 650/65R38 R1W (MI, FI, TR) Front: 540/65R28 R1W (MI, FI, TR)	2,862.00

SUBJECT TO AVAILABILITY

(F.O.B. PORT OF ENTRY)

TIRES for 7615

FRONT AND REAR TIRES - CONTINUED

Order Code	Catalog Number	Description	Approx. Weight (lb.)	List Price
		BAR AXLES- SHORT AND LONG		
		Rear: Single Semi Dished Cast Centers- Set of 2		
		Front: Waffle Wheel		
75-Base	7294897B4 7294786	Rear: 460/85R38 R1W (18.4R38) (MI, FI, TR) Front: 380/85R28 R1W (14.9R28) (MI, FI, TR)		**In Base**
75-W1533	7294893B4 7293763	Rear: 520/85R38 R1W (MI, FI, TR) Front: 420/85R28 R1W (MI, FI, TR)		2,663.00
75-W1377	7294882B4 7293764	Rear: 480/80R42 R1W* (MI, TR, FI) Front: 380/85R30 R1W* (MI, TR, FI)		1,384.00
75-W1318	7294883B4 7293764	Rear: 380/90R46 R1W* (MI, FI) Front: 380/85R30 R1W* (MI, FI)		1,389.00
75-W1384	7294882B4 7293763	Rear: 480/80R42 R1W (MI, TR) Front: 420/85R28 R1W (MI, TR)		2,005.00
		BAR AXLES- LONG		
		Rear: Dual Cast Inner / Steel Outer - Set of 4		
		Front: Waffle Wheel		
75-W1374	7294898B4 7294786	Duals: 460/85R38 R1W (MI, TR) Front: 380/85R28 R1W (MI, TR)		6,965.00
75-W1379	7294887B4 7293764	Duals: 380/90R46 R1W (MI) Front: 380/85R30 R1W (MI)		8,618.00
75-W1380	7294886B4 7293764	Duals: 480/80R42 R1W* (MI, TR, FI) Front: 380/85R30 R1W* (MI, TR, FI)		7,910.00
75-W1386	7294886B4 7293763	Duals: 480/80R42 R1W (MI, TR) Front: 420/85R28 R1W (MI, TR)		8,531.00
75-W1658	7294896B4 7293763	Duals: 520/85R38 R1W (MI) Front: 420/85R28 R1W (MI)		8,851.00

*** FIRESTONE TREAD TYPE IS R1**

SUBJECT TO AVAILABILITY

(F.O.B. PORT OF ENTRY)

Order Code	Catalog Number	Description	Approx. Weight (lb.)	List Price

TIRES for 7616 and 7618

TIRE BRAND SELECTION

70-Blank	7294212	Factory Brand Choice	No Charge
70-T0001	7294195	Michelin Brand Required	1,552.00
70-T0007	7294197	Firestone Brand Required	1,158.00
70-T0010	7294198	Trelleborg Brand Required	1,158.00

FRONT AND REAR TIRES

FLANGE AXLE*

Rear: Single Pressed Steel Manual Adjust - Set of 2
Front: Waffle Wheel

75-W1297	7292864B1 7293762B2	Rear: 460/85R38 R1W (MI, FI, TR) Front: 380/85R28 R1W (MI, FI, TR)	(1,394.00)
75-W1309	7292865B1 7294762B2	Rear: 520/85R38 R1W (MI, FI, TR) Front: 420/85R28 R1W (MI, FI, TR)	(37.00)

Rear: Single Welded Pressed Steel - Set of 2
Front: Fixed Welded Steel Rim

75-W1478	7292873B1 7294791B2	Rear: 540/80R38 (Nokian Industrial) Front: 440/80R28 (Nokian Industrial)	8,667.00
75-W1286	7292858B1 7294784B2	Rear: 540/65R38 R1W (MI, FI, TR) Front: 440/65R28 R1W (MI, FI, TR)	(713.00)
75-W1257	7292859B1 7293758B2	Rear: 600/65R38 R1W (MI, FI, TR) Front: 480/65R28 R1W (MI, FI, TR)	(25.00)
75-W1258	7292860B1 7294783B2	Rear: 650/65R38 R1W (MI, FI, TR) Front: 540/65R28 R1W (MI, FI, TR)	2,852.00

****Flange Axles are not compatible with Dyna-VT Transmissions***

BAR AXLES- SHORT AND LONG

Rear: Single Welded Pressed Steel - Set of 2
Front: Fixed Welded Steel Rim

75-W1670	7294899B4 7294784B2	Rear: 540/65R38 R1W (MI, FI, TR) Front: 440/65R28 R1W (MI, FI, TR)	(656.00)
75-W1572	7294894B4 7293758B2	Rear: 600/65R38 R1W (MI, FI, TR) Front: 480/65R28 R1W (MI, FI, TR)	(93.00)
75-W1673	7294905B4 7294791B2	Rear: 540/80R38 (Nokian Industrial) Front: 440/80R28 (Nokian Industrial)	8,676.00
75-W1262	7294895B4 7294783B2	Rear: 650/65R38 R1W (MI, FI, TR) Front: 540/65R28 R1W (MI, FI, TR)	2,862.00

SUBJECT TO AVAILABILITY

(F.O.B. PORT OF ENTRY)

TIRES for 7616 and 7618

Mississippi State Contract Discount: 23%

FRONT AND REAR TIRES - CONTINUED

BAR AXLES- SHORT AND LONG

Rear: Single Semi Dished Cast Centers- Set of 2
Front: Waffle Wheel

Order Code	Catalog Number	Description	Approx. Weight (lb.)	List Price
75-Base	7294897B4	Rear: 460/85R38 R1W (18.4R38) (MI, FI, TR)		**In Base**
	7293762B2	Front: 380/85R28 R1W (14.9R28) (MI, FI, TR)		
75-W1533	7294893B4	Rear: 520/85R38 R1W (MI, FI, TR)		2,663.00
	7294762B2	Front: 420/85R28 R1W (MI, FI, TR)		
75-W1377	7294882B4	Rear: 480/80R42 R1W* (MI, TR, FI)		1,384.00
	7294765B2	Front: 380/85R30 R1W* (MI, TR, FI)		
75-W1620	7294882B4	Rear: 480/80R42 R1W (MI)		2,111.00
	7294769B2	Front: 320/85R34 R1W (MI)		
75-W1548	7294883B4	Rear: 380/90R46 R1W (MI)		2,116.00
	7294769B2	Front: 320/85R34 R1W (MI)		
75-W1318	7294883B4	Rear: 380/90R46 R1W* (MI, FI)		1,389.00
	7294765B2	Front: 380/85R30 R1W* (MI, FI)		
75-W1394	7294885B4	Rear: 320/90R50 R1W (MI)		2,539.00
	7294769B2	Front: 320/85R34 R1W (MI)		
75-W1384	7294882B4	Rear: 480/80R42 R1W (MI, TR)		2,005.00
	7294762B2	Front: 420/85R28 R1W (MI, TR)		

*** FIRESTONE TREAD TYPE IS R1**

SUBJECT TO AVAILABILITY

(F.O.B. PORT OF ENTRY)

TIRES for 7616 and 7618

FRONT AND REAR TIRES - CONTINUED

BAR AXLES- LONG

Rear: Dual Cast Inner / Steel Outer - Set of 4
Front: Waffle Wheel

Order Code	Catalog Number	Description	Approx. Weight (lb.)	List Price
75-W1374	7294898B4 7293762B2	Duals: 460/85R38 R1W (MI, TR) Front: 380/85R28 R1W (MI, TR)		6,965.00
75-W1395	7294889B4 7294769B2	Duals: 320/90R50 R1W (MI) Front: 320/85R34 R1W (MI)		9,591.00
75-W1549	7294887B4 7294769B2	Duals: 380/90R46 R1W (MI) Front: 320/85R34 R1W (MI)		9,345.00
75-W1379	7294887B4 7294765B2	Duals: 380/90R46 R1W (MI) Front: 380/85R30 R1W (MI)		8,618.00
75-W1621	7294886B4 7294769B2	Duals: 480/80R42 R1W (MI) Front: 320/85R34 R1W (MI)		8,637.00
75-W1380	7294886B4 7294765B2	Duals: 480/80R42 R1W* (MI, TR, FI) Front: 380/85R30 R1W* (MI, TR, FI)		7,910.00
75-W1386	7294886B4 7294762B2	Duals: 480/80R42 R1W (MI, TR) Front: 420/85R28 R1W (MI, TR)		8,531.00
75-W1658	7294896B4 7294762B2	Duals: 520/85R38 R1W (MI) Front: 420/85R28 R1W (MI)		8,851.00

*** FIRESTONE TREAD TYPE IS R1**

SUBJECT TO AVAILABILITY

7600 SMALL FRAME DELUXE EDITION

Mississippi State Contract Discount: 23%

MASSEY FERGUSON®

(F.O.B. PORT OF ENTRY)

Order Code	Catalog Number	Description	Approx. Weight (lb.)	List Price
PTO				
DYNA-6				
100-LC002	Base	540/540E/1000/1000E Exchangeable Shaft . . . . . 540 RPM 6 Spline and 1000 RPM 21 Spline with Economy PTO		In Base
100-LC001	7293589	540 RPM 6 Spline & 1000 RPM 21 Spline . . . . . Exchangeable Shaft with No Economy		(917.00)
DYNA-VT				
100-Base	Base	540/540E/1000 RPM Flanged PTO with one 6 Spline Shaft and one 21 Spline Shaft, with In-Cab Controls		**In Base**
FRONT HITCH				
7615 / 7616 / 7618				
230-FA000	Base	Less Front Hitch		**In Base**
230-F1132	7293594	2800 KG Front Linkage w/ 1 Set of Hydraulic Couplers .		6,190.00
230-F1134	7293595	2800 KG Front Linkage w/ 2 sets of Hydraulic Couplers		6,573.00
230-F1135	7293596	2800 KG Front Linkage with . . . . . 1 set of Hydraulic Couplers with Pressure Drain		6,338.00
7618 Only				
230-FA000	Base	Less Front Hitch		**In Base**
230-F1120	7293366	4000 KG Front Linkage w/ 1 Set of Hydraulic Couplers .		7,042.00
230-F1121	7293368	4000 KG Front Linkage w/ 2 sets of Hydraulic Couplers		8,076.00
230-F1129	7293565	4000 KG Front Linkage with . . . . . 1 set of Hydraulic Couplers with Pressure Drain		7,189.00

***4000 KG FRONT HITCH WILL NOT BE OFFERED AS A FIELD INSTALLED KIT - FACTORY ONLY**

LOADER PROVISION				
350-LL000	Base	Less Loader Provisions. . . . . **(Requires In Base Power Beyond)**		**In Base**
350-LL004*	7293484	Front Loader Provisions including Hydraulics, ... Subframe. (**Requires Valves 1 and 2 Electric with a Joystick (KX012) & Less Power Beyond- GR000**)		5,853.00

TO UTILIZE THE FACTORY INSTALLED MULTIFUNCTION JOYSTICK WITH A LOADER, THE TRACTOR MUST BE EQUIPPED WITH THE LOADER PROVISIONS FROM THE FACTORY.

CAB				
365-AF009	7294249	Radio, AM/FM, MP3 Compatible		(242.00)
125-AE042	7293546	Superluxe Grammar Seat		1,722.00
145-AL009	7293547	Telescopic Large Side Mirrors with Electric . . . . . De-Icing and Adjustment (Not for with Visio Roof, E1022)		453.00
120-AQ004	7293082	Automatic Climate Control . . . . . (Not for use with Visio Roof, E1022)		1,197.00
140-AI020	7293077	Standard Cab Roof with Roof Hatch		262.00
140-E1022	7293078	Visio roof . . . . . (Not Compatible with Mirrors, AL009 or Automatic Climate Control, AQ004)		1,524.00
115-AM084	7293560	Mechanical Cab Suspension		(2,910.00)

SUBJECT TO AVAILABILITY

7600 SMALL FRAME DELUXE EDITION

Mississippi State Contract Discount: 23%

(F.O.B. PORT OF ENTRY)

Order Code	Catalog Number	Description	Approx. Weight (lb.)	List Price
FRONT WEIGHTS				
285-YA112	7293487	121 LBS (55 KGS) Front Weights, Set of 12 . . . . . . with Hardware - total Weight 1,455 LBS (660 KGS)		2,228.00
REAR WHEEL WEIGHTS				
325-RD040	7294192*	551 LBS (250 KGS) Weights, Set of 2 . . . . . . Mounts Externally to Wheel	1102	1,791.00
325-RD041	7294200*	551 LBS (250 KGS) Weights, Set of 4 . . . . . . Mounts Externally to Wheel	2204	3,582.00
		***NOT COMPATIBLE WITH MANUAL ADJUST FLANGE AXLE RIMS**		
BELLY AND HITCH WEIGHTS				
245-YD001	7293374	1 Belly Weight - 584 LBS (265 KGS) . . . . . . (For use **WITHOUT** Front 3-Point Hitch)	584	1,447.00
245-YD001	7293375	1 Belly Weight - 430 LBS (195 KGS) . . . . . . (For use **WITH** Front 3-Point Hitch)	430	1,064.00
345-YB003	7294119	1873 LBS (850 KGS) 3-Point Hitch Weight . . . . . . (For use with Front 3-Point Hitch or Rear 3-Point Hitch without Quick Hitch)	1984	3,307.00
ELECTRICAL				
215-CB002	Base	Engine Block Heater - 110 Volt		**In Base**
215-CB000	7293593	Less Engine Block Heater.		(207.00)
ALTERNATOR				
220-CE019	Base	Twin 120 AMP Alternators.		**In Base**
220-CE020	7293561	175 AMP Alternator. . . . . . (Not Available with ISOBUS.)		(380.00)
LIGHTING				
205-VF013	7293103	Dual Roof-Mounted Rotating Beacons, Left and Right . (Includes SAE SMV sign)		502.00
195-VG078	7295103	2 Front and 2 Rear Xenon Work Lights.. . . . . . Xenon Bulb for Brighter Lights and Longer Bulb Life		3,293.00
360-VE019	7293476	Extremity Lighting . . . . . . (Required with Long Bar Axle) (Not Compatible with Flange Axle)		734.00

SUBJECT TO AVAILABILITY

7600 SMALL FRAME DELUXE EDITION

Mississippi State Contract Discount: 23%

MASSEY FERGUSON®

(F.O.B. PORT OF ENTRY)

Order Code	Catalog Number	Description	Approx. Weight (lb.)	List Price
PIVOTING FRONT FENDERS				
155-WE110	Base	Pivoting Front Fenders - Standard Width . . . . . Width depends on tire selection; see Chart Below		**In Base**
155-WE111	7293598	Pivoting Front Fenders - Wide Width . . . . . Width depends on tire selection; see Chart Below		116.00

Fender Size		
Standard	**Wide**	**Tire Sizes**
320 mm	355 mm	320/85R34 (12.4R34)
355 mm	380 mm	340/85R24 (13.6R24) 340/85R28 (13.6R28)
380 mm	410 mm	380/85R28 (14.9R28) 380/85R30 (14.9R30) 400/80R24 400/80R28
410 mm	470 mm	420/85R28 (16.9R28) 440/65R28
470 mm	520 mm	440/80R28 480/65R28
520 mm	620 mm	540/65R28

REAR FENDERS			
255-WD012	Base	Rear Fenders without Extensions, 78.74"(2.00 M) . . .	**In Base**
255-WD017	7293107	Wide Fender -90.55" (2.3 M) with Rear Extension . . .	1,272.00
255-WD020	7293109	Extra Wide Fender -100.4" (2.55 M) . . . . . with Rear Extension	1,421.00

SUBJECT TO AVAILABILITY

7600 SMALL FRAME DELUXE EDITION

Mississippi State Contract Discount: 23%

(F.O.B. PORT OF ENTRY)

Order Code	Catalog Number	Description	Approx. Weight (lb.)	List Price
MISCELLANEOUS				
35-EN001	7293092	Creeper Gear (4:1 Reduction) (**Available on Dyna-6 Editions Only**)		2,297.00
35-EN002	7293402	14:1:1 Super Creeper Reduction Gear (**Available on Dyna-6 Editions Only)**		2,822.00
250-GS001	7293100	Hydraulic Trailer Brakes		785.00
250-GS062	7293551	Pneumatic Trailer Brakes		6,505.00
250-GS067	7293552	Pneumatic & Hydraulic Trailer Brakes		7,289.00
225-LQ001	7293553	Water Separator (Fuel Filter)		448.00
275-TC005	7294210	French Language OIB		No Charge
275-TC011	7294211	Spanish Language OIB		No Charge

DEALER INSTALLED OPTIONS

FRONT WEIGHTS

5020186M	8 x 55kg (121 lbs.) Front Weights	968	1,485.00
5020187M	10 x 55kg (121 lbs.) Front Weights	1210	1,857.00
5020188M	12 x 55kg (121 lbs.) Front Weights	1452	2,228.00
5020189M	14 x 55kg (121 lbs.) Front Weights	1694	2,600.00

SUBJECT TO AVAILABILITY

MASSEY FERGUSON®

RESERVED PAGE

7600 SMALL FRAME PREMIUM EDITION

Mississippi State Contract Discount: 23%

(F.O.B. PORT OF ENTRY)

PREMIUM EDITION FEATURES

ENGINE
7615/7616/7618
AGCO POWER 6.6L (403 cu in.) 6 Cylinder, Tier 4i Compliant
- e3 SCR Technology
- Air-to-Air Aftercooled, Common Rail Injection, Turbocharged

Electronic Engine Management (EEM) with Dual ERPM Settings
Electronic Controlled Viscous Fan Drive
Dual Element Dry Type Air Cleaner
Vertical Exhaust at Right Front Cab Post
Cooling System: Antifreeze to Minus 30°F(-34°C)
Fuel Tank Capacity: 82 Gal (310L)
DEF Tank Capacity: 8 Gal (30L)

POWERTRAIN
7615/7616/7618: DYNA-VT
- Continuously Variable Transmission, 60 ft/h to 25 MPH (18.2 Meters/h to 40 KPH)
- Dynamic Tractor Management (DTM) with Two Programmable Cruise Speeds
- Short Bar Rear Axle, 90 In. (2277mm) Long, 3.74 in. (95mm) Diameter

7615/7616/7618: DYNA-6 TRANSMISSION
- 24F/24R Semi-Powershift, 4 Ranges with 6 Powershifts per Range
- Dynamic Tractor Management (DTM) with Two Programmable Cruise Speeds
- Short Bar Rear Axle, 80 in. (2028mm) Long, 3.23 in. (82mm) Diameter

Multi-Disc Wet Brakes
Power Differential Lock
Independent PTO:
DYNA-VT: 540/540E/1000 RPM Flanged Shaft, 540 with 6 Spline and 1000 with 21 Spline
DYNA-6: 540/540E/1000/1000E Exchangeable Shaft, 540 with 6 Spline and 1000 with 21 Spline with Electric Control
Rear Fender Mounted PTO Shut-Off
SV1 & SV2 Settings

FRONT WHEEL ASSIST AXLE
Power Front Axle (PFA)
8 Bolt Pattern: 7615 Dyna-6 and Dyna-VT
10 Bolt Pattern: 7616 and 7618 Dyna-6 and Dyna-VT
Suspended Front Axle
Shielded Center Drive Line with Electro-Hydraulic Control & Front Wheel Drive Differential Lock
55 Degree Steering Angle
SpeedSteer

HYDRAULICS
Closed Center Load Sensing 29 gpm (110 L/Min) Pump
2900 PSI (200 Bar) Maximum Pressure
4 Electric Valves - Fingertip Controlled, 2 Located on Armrest, 2 Located Right Hand Console
Hydrostatic Power Steering
Power Beyond

HITCH
3 Point Hitch: Category 2/3 Linkage Ball Ends
Active Transport Control
Lower Link Sensing
Electronic Draft Control, Electronic Height Control, & Rate of Drop
Variable Float Telescopic Stabilizers
Left and Right Side External 3 Point Control
Drawbar: Category 2, Clevis and Drop Pin

ELECTRICAL SYSTEM
2 – 120 Amp Alternators
2 – 12V Batteries, 600 CCA Each (SAE)
7 Pin ASAE Rear Trailer Electrical Outlet
Electrical Isolator Switch and Jumpstart Point
110V Engine Block Heater
Ignition with Neutral Start and Key Shutoff

LIGHTING
8 Front Hood Mounted Lights
Four Front Single Bulb Worklights
Two Rear Double Bulb Worklights
Two Field Lights on Hand Rails and Rear Fenders with Taillights, Flashing Warning Lights, and Turn Signals

INSTRUMENTS
Control Center Display (CCD)
- Video Input
- Electric Valve Control
- ISOBUS Compliant

Radar with Slip Control
Tachometer: Digital and Analog
PTO Speed: Digital
Ground Speed Display: Digital
Fuel Level, DEF Level, and Coolant Temp Gauges
Warning/Information Lights

OPERATOR AREA
OptiRide Cab Suspension
6 Post Cab
Transmission Control Multi-controller on Armrest
Adjustable Steering Column
Front Sun Visor
Automatic Climate Control
Air Suspended Seat - Automatic Adjustment
Front and Rear Windshield Wiper/Washer
Dual Large Telescoping Outside Rear View Mirrors with De-Icing.
Single Inside Rear View Mirror
Radio with AM/FM/CD/MP3/Bluetooth and 2 Audio Speakers and Antenna
3 Pin 12V Power Outlet
12V Cigarette Lighter Style Power Outlet
ISO 11783 9-Pin in Cab Connector
ISO 11786 7-Pin in Cab Connector

WHEELS AND TIRES
Rear 460/85R38 R1W Single Wheels
Front 380/85R28 R1W Single Waffle Wheels

OTHER STANDARD FEATURES
Auto-Steer Complete: Auto-Guide™ 3000 Sub-Meter (WAAS and OmniStar VBS)
Auto Steering System using the Control Center Display (CCD)
AGCOMMAND Ready with Antenna, Bracket, and Harness (To Complete, See Technology Section)
Lockable Tool Box
SMV Sign
Molded Rear Fenders
English Literature

SUBJECT TO AVAILABILITY

7600 SMALL FRAME PREMIUM EDITION

Mississippi State Contract Discount: 23%

MASSEY FERGUSON®

(F.O.B. PORT OF ENTRY)

Order Code	Catalog Number	Description	Approx. Weight (lb.)	List Price

ONE *ORDER CODE* FROM EACH GROUP MUST BE SPECIFIED. (Unless In Base Option is desired)

BASE MACHINE

DYNA-6 EDITIONS-- Beauvais Built

MF7615~D6~EX~02	7293670	Massey 7615 Premium Tractor 110 PTO HP	162,734.00
MF7616~D6~EX~02	7293671	Massey 7616 Premium Tractor 120 PTO HP	168,744.00
MF7618~D6~EX~02	7293672	Massey 7618 Premium Tractor 130 PTO HP	174,754.00

DYNA-VT EDITIONS-- Beauvais Built

MF7615~DV~EX~02	7293673	Massey 7615 Premium Tractor 110 PTO HP	173,237.00
MF7616~DV~EX~02	7293674	Massey 7616 Premium Tractor 120 PTO HP	179,247.00
MF7618~DV~EX~02	7293675	Massey 7618 Premium Tractor 130 PTO HP	185,257.00

TRANSMISSION OPTIONS FOR DYNA-6 EDITIONS

25-EA655	Base	6x4 Dyna-6 Transmission with 24F/24R gears. . . . 25 MPH (40 KPH) with Dynamic Tractor Management (DTM)	**In Base**
25-G1063*	7293524	6X4 Dyna-6 Transmission with 24F/24R gears. . . . 31 MPH (50 KPH) with Dynamic Tractor Management (DTM). Also includes: High Pressure Brakes. (Not Compatible with Power Front Axle, NA030)	1,585.00

***Suspended Front Axle Recommends 50 kph Transmission**

TRANSMISSION OPTIONS FOR DYNA-VT EDITIONS

25-EA621	Base	Dyna-VT Transmission - 25 MPH (40 KPH)	**In Base**
25-EA622	7293525	Dyna-VT Transmission - 31 MPH (50 KPH) . . . . . (Not Compatible with Power Front Axle, NA030)	775.00

EQUIPMENT REQUIRED FOR NORTH AMERICA

	7293488	Instructional Seat	472.00
	7293489	Front Weight Carrier . . . . . . (Removed when factory installed front 3-Point Hitch is selected.)	304.00

SUBJECT TO AVAILABILITY

7600 SMALL FRAME PREMIUM EDITION

Mississippi State Contract Discount: 23%

(F.O.B. PORT OF ENTRY)

Order Code	Catalog Number	Description	Approx. Weight (lb.)	List Price
AUXILIARY VALVE 1 & 2				
50-KX011	Base	Valves 1 and 2 Electric, Fingertip Controlled Spool Valves Fingertips Located in Armrest		**In Base**
50-KX012	7293530	Valves 1 and 2 Electric, with Multifunction Joystick on the Armrest (Required when Choosing Factory Installed Loader Provisions (LL004))		No Charge

TO UTILIZE THE FACTORY INSTALLED MULTIFUNCTION JOYSTICK WITH A LOADER, THE TRACTOR MUST BE EQUIPPED WITH THE LOADER PROVISIONS FROM THE FACTORY.

AUXILIARY VALVE 3 & 4				
55-MU031	Base	3rd and 4th Electric, Fingertip Controlled Valves . . . . with Fingertips located on Right Hand Console		**In Base**
POWER BEYOND				
90-GR010	Base	Power Beyond Couplers P/T/LS/D		**In Base**
90-GR000	7293665	Less Power Beyond . . . . . . (Only available with Front Loader Provision LL004)		(716.00)
FRONT AXLE				
65-Base	Base*	Suspended Power Front Axle		**In Base**

***Suspended Front Axle Recommends 50 kph Transmission**

REAR AXLE				
DYNA-6				
60-EE402	Base	Short Bar Rear Axle, 80 in. (2028mm) Long, 3.23 in (82mm) Diameter		**In Base**
60-EE400	7293027	Flange Axle		(456.00)
60-EE404	7293026	Long Bar Rear Axle, 3.23 in (82mm) Diameter, ... 105 in (2672mm) Long (Requires Extremity Lights VE019)		898.00
DYNA-VT				
60-EE402	Base	Short Bar Rear Axle, 90 in. (2277mm) Long, ... 3.74 in. (95mm) Diameter		**In Base**
60-EE404	7293131	Long Bar Rear Axle, 118 in. (2997mm) long, ... 3.74 in. (95mm) Diameter (Requires Extremity Lights VE019)		898.00
REAR 3-POINT HITCH				
95-GC009	Base	Category 2/3 Telescopic Ball End Links		**In Base**
95-GC022	7293572*	Category 3 Hook End Links and Cat 2/3 Balls and Cones		No Charge
95-GC026	7293573*	Category 3 Hook End Links, with Hydraulic Top Link . . and Cat 3/3 and Cat 2/3 Balls and Cones. ***Not Available with Dyna-VT Transmission**		865.00
REAR THREE POINT STABILIZERS				
165-Base	Base	Variable Float Telescopic Stabilizers		**In Base**
165-YG006	7293403*	Rub Block Stabilizers . . . . . . (Requires Category 2/3 Telescopic Ball End Links, GC009)		640.00
165-YG009	7293574*	Automatic Stabilizers		328.00
		***Not Available with Dyna-VT Transmission**		

SUBJECT TO AVAILABILITY

(F.O.B. PORT OF ENTRY)

Order Code	Catalog Number	Description	Approx. Weight (lb.)	List Price
INSTRUMENT PANEL / CONTROL CENTER DISPLAY (CCD)				
LESS AUTO-STEERING READY				
175-BA008	7293679	Analog and Digital Instrument Panel, Control Center . . Display (CCD) with Video Input, Electric Valve Control, Radar with Slip Control and ISOBUS.		(4,973.00)
AUTO-STEERING READY				
175-BA012	7293678	Analog and Digital Instrument Panel, Control Center . . Display (CCD) with Video Input, Electric Valve Control, Radar with Slip Control and ISOBUS. (Includes Roof Plate and Wiring Harness) *Order Auto-Guide™ 3000 TopDock Separately* *See Technology Section*		(4,828.00)

Note: The Control Center Display (CCD) is required to utilize Auto-Guide™ 3000.

AUTO-STEERING COMPLETE				
175-BA021	Base	Analog and Digital Instrument Panel, Control Center . . Display (CCD) with Video Input, Electric Valve Control, and ISOBUS. Radar with Slip Control. Auto-Guide™ 3000 Sub-Meter (WAAS and OmniStar VBS) Auto Steering System. (Requires SpeedSteer) Auto-Guide™ 3000 uses the Control Center Display (CCD).		**In Base**
SPEEDSTEER				
185-AD004	Base	SpeedSteer Option		**In Base**
185-AD002	7293558	Less SpeedSteer Option . . . . . (Not Available with BA012 and Base Instrument Control Panel)		(900.00)

SUBJECT TO AVAILABILITY

(F.O.B. PORT OF ENTRY)

Order Code	Catalog Number	Description	Approx. Weight (lb.)	List Price

TIRES for 7615

TIRE BRAND SELECTION

70-Blank	7294212	Factory Brand Choice	No Charge
70-T0001	7294195	Michelin Brand Required	1,552.00
70-T0007	7294197	Firestone Brand Required	1,158.00
70-T0010	7294198	Trelleborg Brand Required	1,158.00

FRONT AND REAR TIRES

FLANGE AXLE*

Rear: Single Pressed Steel Manual Adjust - Set of 2
Front: Waffle Wheel

75-W1297	7292864B1 7294786	Rear: 460/85R38 R1W (MI, FI, TR) Front: 380/85R28 R1W (MI, FI, TR)	(1,394.00)
75-W1309	7292865B1 7293763	Rear: 520/85R38 R1W (MI, FI, TR) Front: 420/85R28 R1W (MI, FI, TR)	(37.00)

Rear: Single Welded Pressed Steel - Set of 2
Front: Fixed Welded Steel Rim

75-W1478	7292873B1 7293769	Rear: 540/80R38 (Nokian Industrial) Front: 440/80R28 (Nokian Industrial)	8,667.00
75-W1286	7292858B1 7293757	Rear: 540/65R38 R1W (MI, FI, TR) Front: 440/65R28 R1W (MI, FI, TR)	(713.00)
75-W1257	7292859B1 7294785	Rear: 600/65R38 R1W (MI, FI, TR) Front: 480/65R28 R1W (MI, FI, TR)	(25.00)
75-W1258	7292860B1 7293759	Rear: 650/65R38 R1W (MI, FI, TR) Front: 540/65R28 R1W (MI, FI, TR)	2,852.00

****Flange Axles are not compatible with Dyna-VT Transmissions***

BAR AXLES- SHORT AND LONG

Rear: Single Welded Pressed Steel - Set of 2
Front: Fixed Welded Steel Rim

75-W1670	7294899B4 7293757	Rear: 540/65R38 R1W (MI, FI, TR) Front: 440/65R28 R1W (MI, FI, TR)	(656.00)
75-W1572	7294894B4 7294785	Rear: 600/65R38 R1W (MI, FI, TR) Front: 480/65R28 R1W (MI, FI, TR)	(93.00)
75-W1673	7294905B4 7293769	Rear: 540/80R38 (Nokian Industrial) Front: 440/80R28 (Nokian Industrial)	8,676.00
75-W1262	7294895B4 7293759	Rear: 650/65R38 R1W (MI, FI, TR) Front: 540/65R28 R1W (MI, FI, TR)	2,862.00

SUBJECT TO AVAILABILITY

(F.O.B. PORT OF ENTRY)

TIRES for 7615

FRONT AND REAR TIRES - CONTINUED

BAR AXLES- SHORT AND LONG

Rear: Single Semi Dished Cast Centers- Set of 2
Front: Waffle Wheel

Order Code	Catalog Number	Description	Approx. Weight (lb.)	List Price
75-Base	7294897B4 7294786	Rear: 460/85R38 R1W (18.4R38) (MI, FI, TR) Front: 380/85R28 R1W (14.9R28) (MI, FI, TR)		**In Base**
75-W1533	7294893B4 7293763	Rear: 520/85R38 R1W (MI, FI, TR) Front: 420/85R28 R1W (MI, FI, TR)		2,663.00
75-W1377	7294882B4 7293764	Rear: 480/80R42 R1W* (MI, TR, FI) Front: 380/85R30 R1W* (MI, TR, FI)		1,384.00
75-W1318	7294883B4 7293764	Rear: 380/90R46 R1W* (MI, FI) Front: 380/85R30 R1W* (MI, FI)		1,389.00
75-W1384	7294882B4 7293763	Rear: 480/80R42 R1W (MI, TR) Front: 420/85R28 R1W (MI, TR)		2,005.00

BAR AXLES- LONG

Rear: Dual Cast Inner / Steel Outer - Set of 4
Front: Waffle Wheel

75-W1374	7294898B4 7294786	Duals: 460/85R38 R1W (MI, TR) Front: 380/85R28 R1W (MI, TR)		6,965.00
75-W1379	7294887B4 7293764	Duals: 380/90R46 R1W (MI) Front: 380/85R30 R1W (MI)		8,618.00
75-W1380	7294886B4 7293764	Duals: 480/80R42 R1W* (MI, TR, FI) Front: 380/85R30 R1W* (MI, TR, FI)		7,910.00
75-W1386	7294886B4 7293763	Duals: 480/80R42 R1W (MI, TR) Front: 420/85R28 R1W (MI, TR)		8,531.00
75-W1658	7294896B4 7293763	Duals: 520/85R38 R1W (MI) Front: 420/85R28 R1W (MI)		8,851.00

*** FIRESTONE TREAD TYPE IS R1**

SUBJECT TO AVAILABILITY

(F.O.B. PORT OF ENTRY)

Order Code	Catalog Number	Description	Approx. Weight (lb.)	List Price

TIRES for 7616 and 7618

TIRE BRAND SELECTION

70-Blank	7294212	Factory Brand Choice	No Charge
70-T0001	7294195	Michelin Brand Required	1,552.00
70-T0007	7294197	Firestone Brand Required	1,158.00
70-T0010	7294198	Trelleborg Brand Required	1,158.00

FRONT AND REAR TIRES

FLANGE AXLE*

Rear: Single Pressed Steel Manual Adjust - Set of 2
Front: Waffle Wheel

75-W1297	7292864B1 7293762B2	Rear: 460/85R38 R1W (MI, FI, TR) Front: 380/85R28 R1W (MI, FI, TR)	(1,394.00)
75-W1309	7292865B1 7294762B2	Rear: 520/85R38 R1W (MI, FI, TR) Front: 420/85R28 R1W (MI, FI, TR)	(37.00)

Rear: Single Welded Pressed Steel - Set of 2
Front: Fixed Welded Steel Rim

75-W1478	7292873B1 7294791B2	Rear: 540/80R38 (Nokian Industrial) Front: 440/80R28 (Nokian Industrial)	8,667.00
75-W1286	7292858B1 7294784B2	Rear: 540/65R38 R1W (MI, FI, TR) Front: 440/65R28 R1W (MI, FI, TR)	(713.00)
75-W1257	7292859B1 7293758B2	Rear: 600/65R38 R1W (MI, FI, TR) Front: 480/65R28 R1W (MI, FI, TR)	(25.00)
75-W1258	7292860B1 7294783B2	Rear: 650/65R38 R1W (MI, FI, TR) Front: 540/65R28 R1W (MI, FI, TR)	2,852.00

****Flange Axle is not compatible with Dyna-VT Transmission***

BAR AXLES- SHORT AND LONG

Rear: Single Welded Pressed Steel - Set of 2
Front: Fixed Welded Steel Rim

75-W1670	7294899B4 7294784B2	Rear: 540/65R38 R1W (MI, FI, TR) Front: 440/65R28 R1W (MI, FI, TR)	(656.00)
75-W1572	7294894B4 7293758B2	Rear: 600/65R38 R1W (MI, FI, TR) Front: 480/65R28 R1W (MI, FI, TR)	(93.00)
75-W1673	7294905B4 7294791B2	Rear: 540/80R38 (Nokian Industrial) Front: 440/80R28 (Nokian Industrial)	8,676.00
75-W1262	7294895B4 7294783B2	Rear: 650/65R38 R1W (MI, FI, TR) Front: 540/65R28 R1W (MI, FI, TR)	2,862.00

SUBJECT TO AVAILABILITY

(F.O.B. PORT OF ENTRY)

TIRES for 7616 and 7618

FRONT AND REAR TIRES - CONTINUED

BAR AXLES- SHORT AND LONG

Rear: Single Semi Dished Cast Centers- Set of 2
Front: Waffle Wheel

Order Code	Catalog Number	Description	Approx. Weight (lb.)	List Price
75-Base	7294897B4 7293762B2	Rear: 460/85R38 R1W (18.4R38) (MI, FI, TR) Front: 380/85R28 R1W (14.9R28) (MI, FI, TR)		**In Base**
75-W1533	7294893B4 7294762B2	Rear: 520/85R38 R1W (MI, FI, TR) Front: 420/85R28 R1W (MI, FI, TR)		2,663.00
75-W1377	7294882B4 7294765B2	Rear: 480/80R42 R1W* (MI, TR, FI) Front: 380/85R30 R1W* (MI, TR, FI)		1,384.00
75-W1620	7294882B4 7294769B2	Rear: 480/80R42 R1W (MI) Front: 320/85R34 R1W (MI)		2,111.00
75-W1548	7294883B4 7294769B2	Rear: 380/90R46 R1W (MI) Front: 320/85R34 R1W (MI)		2,116.00
75-W1318	7294883B4 7294765B2	Rear: 380/90R46 R1W*(MI, FI) Front: 380/85R30 R1W* (MI, FI)		1,389.00
75-W1394	7294885B4 7294769B2	Rear: 320/90R50 R1W (MI) Front: 320/85R34 R1W (MI)		2,539.00
75-W1384	7294882B4 7294762B2	Rear: 480/80R42 R1W (MI, TR) Front: 420/85R28 R1W (MI, TR)		2,005.00

*** FIRESTONE TREAD TYPE IS R1**

SUBJECT TO AVAILABILITY

(F.O.B. PORT OF ENTRY)

TIRES for 7616 and 7618

FRONT AND REAR TIRES - CONTINUED

BAR AXLES- LONG

Rear: Dual Cast Inner / Steel Outer - Set of 4
Front: Waffle Wheel

Order Code	Catalog Number	Description	Approx. Weight (lb.)	List Price
75-W1374	7294898B4 7293762B2	Duals: 460/85R38 R1W (MI, TR) Front: 380/85R28 R1W (MI, TR)		6,965.00
75-W1395	7294889B4 7294769B2	Duals: 320/90R50 R1W (MI) Front: 320/85R34 R1W (MI)		9,591.00
75-W1549	7294887B4 7294769B2	Duals: 380/90R46 R1W (MI) Front: 320/85R34 R1W (MI)		9,345.00
75-W1379	7294887B4 7294765B2	Duals: 380/90R46 R1W (MI, FI) Front: 380/85R30 R1W (MI, FI)		8,618.00
75-W1621	7294886B4 7294769B2	Duals: 480/80R42 R1W (MI) Front: 320/85R34 R1W (MI)		8,637.00
75-W1380	7294886B4 7294765B2	Duals: 480/80R42 R1W* (MI, TR, FI) Front: 380/85R30 R1W* (MI, TR, FI)		7,910.00
75-W1386	7294886B4 7294762B2	Duals: 480/80R42 R1W (MI, TR) Front: 420/85R28 R1W (MI, TR)		8,531.00
75-W1658	7294896B4 7294762B2	Duals: 520/85R38 R1W (MI) Front: 420/85R28 R1W (MI)		8,851.00

*** FIRESTONE TREAD TYPE IS R1**

SUBJECT TO AVAILABILITY

7600 SMALL FRAME PREMIUM EDITION

Mississippi State Contract Discount: 23%

MASSEY FERGUSON®

(F.O.B. PORT OF ENTRY)

Order Code	Catalog Number	Description	Approx. Weight (lb.)	List Price
PTO				
DYNA-6				
100-LC002	Base	540/540E/1000/1000E Exchangeable Shaft . . . . . 540 RPM 6 Spline and 1000 RPM 21 Spline with Economy PTO		In Base
100-LC001	7293589	540 RPM 6 Spline & 1000 RPM 21 Spline . . . . . Exchangeable Shaft with No Economy		(917.00)
DYNA-VT				
100-Base	Base	540/540E/1000 RPM Flanged PTO with one 6 Spline Shaft and one 21 Spline Shaft, with In-Cab Controls		**In Base**
FRONT HITCH				
7615 / 7616 / 7618				
230-FA000	Base	Less Front Hitch		**In Base**
230-F1132	7293594	2800 KG Front Linkage w/1 Set of Hydraulic Couplers .		6,190.00
230-F1134	7293595	2800 KG Front Linkage w/ 2 sets of Hydraulic Couplers		6,573.00
230-F1135	7293596	2800 KG Front Linkage with . . . . . 1 set of Hydraulic Couplers with Pressure Drain		6,338.00
7618 Only				
230-FA000	Base	Less Front Hitch		**In Base**
230-F1120	7293366	4000 KG Front Linkage w/ 1 Set of Hydraulic Couplers .		7,042.00
230-F1121	7293368	4000 KG Front Linkage w/ 2 sets of Hydraulic Couplers		8,076.00
230-F1129	7293565	4000 KG Front Linkage with . . . . . 1 set of Hydraulic Couplers with Pressure Drain		7,189.00

***4000 KG FRONT HITCH WILL NOT BE OFFERED AS A FIELD INSTALLED KIT - FACTORY ONLY**

LOADER PROVISION				
350-LL000	Base	Less Loader Provisions. . . . . **(Requires In Base Power Beyond)**		**In Base**
350-LL004*	7293484	Front Loader Provisions including Hydraulics, ... Subframe. (**Requires Valves 1 and 2 Electric with a Joystick (KX012) & Less Power Beyond- GR000**)		5,853.00

TO UTILIZE THE FACTORY INSTALLED MULTIFUNCTION JOYSTICK WITH A LOADER, THE TRACTOR MUST BE EQUIPPED WITH THE LOADER PROVISIONS FROM THE FACTORY.

CAB				
365-AF009	7294249	Radio, AM/FM, MP3 Compatible		(242.00)
125-AE042	7293546	Superluxe Grammar Seat		1,722.00
140-AI020	7293077	Standard Cab Roof with Roof Hatch		262.00
120-AQ001	7295100	Manual AC		(1,162.00)

SUBJECT TO AVAILABILITY

7600 SMALL FRAME PREMIUM EDITION

MASSEY FERGUSON®

Mississippi State Contract Discount: 23%

(F.O.B. PORT OF ENTRY)

Order Code	Catalog Number	Description	Approx. Weight (lb.)	List Price
FRONT WEIGHTS				
285-YA112	7293487	121 LBS (55 KGS) Front Weights, Set of 12 . . . . . . with Hardware - total Weight 1,455 LBS (660 KGS)		2,228.00
REAR WHEEL WEIGHTS				
325-RD040	7294192*	551 LBS (250 KGS) Weights, Set of 2 . . . . . . Mounts Externally to Wheel	1102	1,791.00
325-RD041	7294200*	551 LBS (250 KGS) Weights, Set of 4 . . . . . . Mounts Externally to Wheel	2204	3,582.00
		***NOT COMPATIBLE WITH MANUAL ADJUST FLANGE AXLE RIMS**		
BELLY AND HITCH WEIGHTS				
245-YD001	7293374	1 Belly Weight - 584 LBS (265 KGS) . . . . . . (For use **WITHOUT** Front 3-Point Hitch)	584	1,447.00
245-YD001	7293375	1 Belly Weight - 430 LBS (195 KGS) . . . . . . (For use **WITH** Front 3-Point Hitch)	430	1,064.00
345-YB003	7294119	1873 LBS (850 KGS) 3-Point HITCH Weight . . . . . . (For use with Front 3-Point Hitch or Rear 3-Point Hitch without Quick Hitch)	1984	3,307.00
ELECTRICAL				
215-CB002	Base	Engine Block Heater - 110 Volt		**In Base**
215-CB000	7293593	Less Engine Block Heater.		(207.00)
LIGHTING				
205-VF013	7293103	Dual Roof-Mounted Rotating Beacons, Left and Right . (Includes SAE SMV sign)		502.00
195-VG078	7295103	2 Front and 2 Rear Xenon Work Lights.. . . . . . Xenon Bulb for Brighter Lights and Longer Bulb Life		3,293.00
360-VE019	7293476	Extremity Lighting . . . . . . (Required with Long Bar Axle) (Not Compatible with Flange Axle)		734.00

SUBJECT TO AVAILABILITY

7600 SMALL FRAME PREMIUM EDITION

Mississippi State Contract Discount: 23%

MASSEY FERGUSON®

(F.O.B. PORT OF ENTRY)

Order Code	Catalog Number	Description	Approx. Weight (lb.)	List Price
PIVOTING FRONT FENDERS				
155-WE110	Base	Pivoting Front Fenders - Standard Width . . . . . Width depends on tire selection; see Chart Below		**In Base**
155-WE111	7293598	Pivoting Front Fenders - Wide Width . . . . . Width depends on tire selection; see Chart Below		116.00

Fender Size		
Standard	**Wide**	**Tire Sizes**
320 mm	355 mm	320/85R34 (12.4R34)
355 mm	380 mm	340/85R24 (13.6R24) 340/85R28 (13.6R28)
380 mm	410 mm	380/85R28 (14.9R28) 380/85R30 (14.9R30) 400/80R24 400/80R28
410 mm	470 mm	420/85R28 (16.9R28) 440/65R28
470 mm	520 mm	440/80R28 480/65R28
520 mm	620 mm	540/65R28

REAR FENDERS				
255-WD012	Base	Rear Fenders without Extensions, 78.74"(2.00 M) . . .		**In Base**
255-WD017	7293107	Wide Fender -90.55" (2.3 M) with Rear Extension . . .		1,272.00
255-WD020	7293109	Extra Wide Fender -100.4" (2.55 M) . . . . . with Rear Extension		1,421.00

SUBJECT TO AVAILABILITY

7600 SMALL FRAME PREMIUM EDITION

Mississippi State Contract Discount: 23%

(F.O.B. PORT OF ENTRY)

Order Code	Catalog Number	Description	Approx. Weight (lb.)	List Price
MISCELLANEOUS				
35-EN001	7293092	Creeper Gear (4:1 Reduction) (**Available on Dyna-6 Editions Only**)		2,297.00
35-EN002	7293402	14:1:1 Super Creeper Reduction Gear (**Available on Dyna-6 Editions Only**)		2,822.00
250-GS001	7293100	Hydraulic Trailer Brakes		785.00
250-GS062	7293551	Pneumatic Trailer Brakes		6,505.00
250-GS067	7293552	Pneumatic & Hydraulic		7,289.00
225-LQ001	7293553	Water Separator (Fuel Filter)		448.00
275-TC005	7294210	French Language OIB		No Charge
275-TC011	7294211	Spanish Language OIB		No Charge

DEALER INSTALLED OPTIONS

FRONT WEIGHTS

	5020186M	8 x 55kg (121 lbs.) Front Weights	968	1,485.00
	5020187M	10 x 55kg (121 lbs.) Front Weights	1210	1,857.00
	5020188M	12 x 55kg (121 lbs.) Front Weights	1452	2,228.00
	5020189M	14 x 55kg (121 lbs.) Front Weights	1694	2,600.00

SUBJECT TO AVAILABILITY

MASSEY FERGUSON®

RESERVED PAGE

MASSEY FERGUSON®

7619 / 7620 / 7622 / 7624 / 7626 SERIES

HIGH HORSEPOWER

MASSEY FERGUSON®

RESERVED PAGE

7600 LARGE FRAME CLASSIC EDITION

Mississippi State Contract Discount: 25%

(F.O.B. PORT OF ENTRY)

CLASSIC EDITION FEATURES

ENGINE

7619/7620

AGCO POWER 6.6L (403 cu in.) 6 Cylinder, Tier 4i Compliant

- e3 SCR Technology
- Air-to-Air Aftercooled, Common Rail Injection Turbocharged

7622/7624/7626

AGCO POWER 7.4L (452 cu in.) 6 Cylinder, Tier 4i Compliant

- e3 SCR Technology
- Air-to-Air Aftercooled, Common Rail Injection, Turbocharged

Electronic Engine Management (EEM) with Dual ERPM Settings
Electronic Controlled Viscous Fan Drive
Dual Element Dry Type Air Cleaner
Vertical Exhaust at Right Front Cab Post
Cooling System: Antifreeze to Minus 30F (-34C)
Fuel Tank Capacity: 114 Gal (431.5L)
DEF Tank Capacity: 11 Gal (40L)

POWERTRAIN

DYNA-6 TRANSMISSION:

- 24F/24R Semi-Powershift, 4 Ranges with 6 Powershifts per Range

7619/7620/7622: Long Bar Rear Axle 112 in. (2847mm) Long, 3.74 in. (95mm) Diameter
7624 / 7626: Long Bar Rear Axle 118.2 in. (3002mm) Long, 4.33 in. (110mm) Diameter
Multi-Disc Wet Brakes
Power Differential Lock
Independent PTO:
DYNA-6: 540/1000 RPM, 540 with 6 Spline Shaft, 1000 RPM with 21 Spline Shaft, Exchangeable Shafts
Rear Fender Mounted PTO Shut-Off
Less SV1 & SV2 Settings

FRONT WHEEL ASSIST AXLE

Power Front Axle (PFA)
Shielded Center Drive Line with Electro-Hydraulic Control & Front Wheel Drive Differential Lock
55 Degree Steering Angle

HYDRAULICS

Closed Center Load Sensing 29 GPM (110 L/Min) Pump
2900 PSI (200 Bar) Maximum Pressure
3 Mechanical Valves – Lever Controlled on Right Hand Console
Hydrostatic Power Steering

HITCH

3 Point Hitch: Category 3 Linkage Ball Ends with Quick Hitch

- Active Transport Control
- Lower Link Sensing
- Electronic Draft Control, Electronic Height Control, and Rate of Drop
- Rub Block Stabilizers
- Left and Right Side External 3 Point Control

Drawbar: Category 2, Clevis and Drop Pin

ELECTRICAL SYSTEM

175 Amp Alternator
2 – 12V Batteries, 600 CCA Each (SAE)
7 Pin ASAE Rear Trailer Electrical Outlet
Electrical Isolator Switch and Jumpstart Point
Ignition with Neutral Start and Key Shutoff

LIGHTING

8 Front Hood Mounted Lights
Four Front Single Bulb Worklights
Two Rear Double Bulb Worklights
Taillights, Flashing Warning Lights and Turn Signals

INSTRUMENTS

Tachometer: Digital and Analog
PTO Speed: Digital
Ground Speed Display: Digital
Fuel Level, DEF Level, and Coolant Temp Gauges
Warning/Information Lights

OPERATOR AREA

6 Post Cab
Transmission Control T-Handle on Right Hand Console
Adjustable Steering Column
Front Sun Visor
Air Conditioning and Heater
Air Suspended Seat - Automatic Adjustment
Front and Rear Windshield Wiper/Washer
Dual Large Telescoping Outside Rear View Mirrors
Single Inside Rear View Mirror
2 Audio Speakers and Antenna
3 Pin 12V Power Outlets
12V Cigarette Lighter Style Power Outlet

WHEELS AND TIRES

7619/7620/7622

Rear 480/80R42 R1W Single Semi-Dished Cast Center Wheels
Front 420/85R28 R1W Single Waffle Wheels

7624 / 7626

Rear 480/80R46 R1W Single Semi-Dished Cast Center Wheels
Front 420/90R30 R1W Single Waffle Wheels

OTHER STANDARD FEATURES

AGCOMMAND Ready with Antenna, Bracket, and Harness (To Complete, See Technology Section)
Lockable Tool Box
SMV Sign
Molded Rear Fenders
English Literature

SUBJECT TO AVAILABILITY

7600 LARGE FRAME CLASSIC EDITION

Mississippi State Contract Discount: 25%

MASSEY FERGUSON®

(F.O.B. PORT OF ENTRY)

Order Code	Catalog Number	Description	Approx. Weight (lb.)	List Price

ONE *ORDER CODE* FROM EACH GROUP MUST BE SPECIFIED. (Unless In Base Option is desired)

BASE MACHINE

DYNA-6 EDITIONS-- Beauvais Built

MF7619~D6~ES~02	7295105	Massey 7619 Classic Tractor 140 PTO HP	147,356.00
MF7620~D6~ES~02	7295106	Massey 7620 Classic Tractor 150 PTO HP	153,366.00
MF7622~D6~ES~02	7295107	Massey 7622 Classic Tractor 165 PTO HP	162,381.00
MF7624~D6~ES~02	7295108	Massey 7624 Classic Tractor 180 PTO HP	172,717.00
MF7626~D6~ES~02	7295109	Massey 7626 Classic Tractor 195 PTO HP	181,469.00

TRANSMISSION OPTIONS

25-EA655	Base	6x4 Dyna-6 Transmission with 24F/24R gears. . . . 25 MPH (40 KPH) with Dynamic Tractor Management (DTM)	**In Base**
25-G1061	7293523	6X4 Dyna-6 Transmission with 24F/24R gears. . . . 31 MPH (50 KPH) with Dynamic Tractor Management (DTM) Also includes: Suspended Power Front Axle and High Pressure Brakes	8,053.00

EQUIPMENT REQUIRED FOR NORTH AMERICA

7293488	Instructional Seat	472.00
7293489	Front Weight Carrier . . . . . . (Removed when factory installed front 3-Point Hitch is selected.)	304.00

SUBJECT TO AVAILABILITY

7600 LARGE FRAME CLASSIC EDITION

Mississippi State Contract Discount: 25%

(F.O.B. PORT OF ENTRY)

Order Code	Catalog Number	Description	Approx. Weight (lb.)	List Price
AUXILIARY VALVE 1 & 2				
50-KX010	Base	2 Mechanical Controlled Valves, Located on Right Hand Console. 1st and 2nd - Flow Dividing, Kickout, Zero Leak, Float		**In Base**
AUXILIARY VALVE 3 & 4				
55-MU003	Base	3rd Mechanical Valve Only, Located on Right Hand Console. Kickout, Zero Leak, Flow Dividing, Float		**In Base**
55-MU012	7293531	3rd and 4th Mechanically Controlled Valves, ... Located on Right Hand Console. Kickout, Zero Leak, Flow Dividing, Float		1,136.00
FRONT AXLE				
65-NA030	Base	Non-Suspended Power Front Axle . . . . . . (Not Compatible with 31 MPH (50 KPH) Transmission)		**In Base**
65-NA032	7293347	Suspended Power Front Axle . . . . . . (Available as an upgrade on 25 MPH (40 KPH) Transmission) (Included in 31 MPH (50 KPH) Transmission)		6,898.00
REAR AXLE				
FOR 7619 - 7622				
60-EE404	Base	Long Bar Rear Axle, 112 in. (2847mm) long . . . . . . 3.74 in. (95mm) diameter		**In Base**
60-EE402	7293527	Short Bar Rear Axle, 84.4 in. (2144mm) long . . . . . . 3.74 in. (95mm) diameter		(591.00)
FOR 7624 / 7626				
60-EE405	Base	Long Bar Rear Axle, 118.2 in. (3002mm) long . . . . . 4.33 in. (110mm) diameter		**In Base**
60-EE403	7293528	Short Bar Rear Axle, 86.7 in. (2202mm) long . . . . . . 4.33 in. (110mm) diameter		(591.00)
REAR 3-POINT HITCH				
95-GC210	Base	Category 3 Fixed Ball End Links with Category 3/3N Quick Hitch (Not Compatible with Wide Rear Fenders, WD017 or WD020)		**In Base**
95-GC209	7293562	Category 3 Fixed Ball End Links		(1,307.00)
INSTRUMENT PANEL / CONTROL CENTER DISPLAY (CCD)				
175-BA005	Base	Analog and Digital Instrument Panel w/o Radar or Slip . Control. No Control Center Display (CCD).		**In Base**
175-BA003	7293084	Analog and Digital Instrument Panel with Radar . . . . (For Actual Ground Speed) and Slip Control. No Control Center Display (CCD).		808.00

SUBJECT TO AVAILABILITY

(F.O.B. PORT OF ENTRY)

Order Code	Catalog Number	Description	Approx. Weight (lb.)	List Price

TIRES for 7619, 7620 and 7622

TIRE BRAND SELECTION

70-Blank	7294212	Factory Brand Choice		No Charge
70-T0001	7294195	Michelin Brand Required		1,552.00
70-T0007	7294197	Firestone Brand Required		1,158.00
70-T0010	7294198	Trelleborg Brand Required		1,158.00

FRONT AND REAR TIRES

Rear: Single Welded Pressed Steel - Set of 2
Front: Fixed Welded Steel Rim

75-W1673	7294905B3	Rear: 540/80R38 Industrial (NO)		6,671.00
	7294791B1	Front: 440/80R28 Industrial (NO)		
75-W1585	7294857B3	Rear: 710/70R38 R1W (MI, TR, FI)		4,139.00
	7294793B1	Front: 600/65R28 R1W (MI, TR, FI)		

Rear: Single Semi Dished Cast Centers- Set of 2
Front: Waffle Wheel

75-Base	7294882B3	Rear: 480/80R42 R1W (18.4R42 R1W) (MI, TR)		**In Base**
	7294762B1	Front: 420/85R28 R1W (16.9R28 R1W) (MI, TR)		
75-W1377	7294882B3	Rear: 480/80R42 R1W (18.4R42 R1W) (MI, TR)		(621.00)
	7294765B1	Front: 380/85R30 R1W (MI, TR)		
75-W1485	7294870B3	Rear: 520/85R42 R1W (20.8R42 R1W) (MI, TR)		875.00
	7294766B1	Front: 420/85R30 R1W (16.9R30 R1W) (MI, TR)		
75-W1398	7294870B3	Rear: 520/85R42 R1W (20.8R42 R1W) (MI, TR)		1,068.00
	7294770B1	Front: 380/85R34 R1W (14.9R34 R1W) (MI, TR)		
75-W1626	7294871B3	Rear: 480/80R46 R1W (18.4R46 R1W) (MI, TR)		564.00
	7294766B1	Front: 420/85R30 R1W (16.9R30 R1W) (MI, TR)		
75-W1413	7294871B3	Rear: 480/80R46 R1W (18.4R46 R1W) (MI)		1,004.00
	7294767B1	Front: 420/90R30 R1W (MI)		
75-W1349	7294871B3	Rear: 480/80R46 R1W (18.4R46 R1W) (MI, TR)		757.00
	7294770B1	Front: 380/85R34 R1W (14.9R34 R1W) (MI, TR)		
75-W1802	7294911B3	Rear: 380/90R50 R1W (14.9R50 R1W) (FI)		1,505.00
	7294770B1	Front: 380/85R34 R1W (14.9R34 R1W) (FI)		
75-W1354	7294875B3	Rear: 320/90R54 R1W (MI)		3,237.00
	7294773B1	Front: 320/85R38 R1W (MI)		

SUBJECT TO AVAILABILITY

(F.O.B. PORT OF ENTRY)

TIRES for 7619, 7620 and 7622

FRONT AND REAR TIRES - CONTINUED

Order Code	Catalog Number	Description	Approx. Weight (lb.)	List Price
		Rear: Dual Cast Inner / Steel Outer - Set of 4		
		Front: Waffle Wheel		
75-W1386	7294886B3	Duals: 480/80R42 R1W (18.4R42 R1W) (MI, TR)		6,526.00
	7294762B1	Front: 420/85R28 R1W (16.9R28 R1W) (MI, TR)		
75-W1380	7294886B3	Duals: 480/80R42 R1W (18.4R42 R1W) (MI, TR)		5,905.00
	7294765B1	Front: 380/85R30 R1W (MI, TR)		
75-W1596	7294863B3	Duals: 520/85R42 R1W (20.8R42 R1W) (MI, TR)		9,075.00
	7294766B1	Front: 420/85R30 R1W (16.9R30 R1W) (MI, TR)		
75-W1399	7294863B3	Duals: 520/85R42 R1W (20.8R42 R1W) (MI, TR)		9,268.00
	7294770B1	Front: 380/85R34 R1W (14.9R34 R1W) (MI, TR)		
75-W1627	7294864B3	Duals: 480/80R46 R1W (18.4R46 R1W) (MI, TR)		8,540.00
	7294766B1	Front: 420/85R30 R1W (16.9R30 R1W) (MI, TR)		
75-W1414	7294864B3	Duals: 480/80R46 R1W (18.4R46 R1W) (MI)		8,980.00
	7294767B1	Front: 420/90R30 R1W (MI)		
75-W1401	7294864B3	Duals: 480/80R46 R1W (18.4R46 R1W) (MI, TR)		8,733.00
	7294770B1	Front: 380/85R34 R1W (14.9R34 R1W) (MI, TR)		
75-W1745	7294866B3	Duals: 380/90R50 R1W (14.9R50 R1W) (FI)		8,018.00
	7294770B1	Front: 380/85R34 R1W (14.9R34 R1W) (FI)		
75-W1404	7294868B3	Duals: 320/90R54 R1W (MI)		9,302.00
	7294773B1	Front: 320/85R38 R1W (MI)		

SUBJECT TO AVAILABILITY

(F.O.B. PORT OF ENTRY)

TIRES for 7624 and 7626

Order Code	Catalog Number	Description	Approx. Weight (lb.)	List Price
TIRE BRAND SELECTION				
70-Blank	7294212	Factory Brand Choice		No Charge
70-T0001	7294195	Michelin Brand Required		1,552.00
70-T0007	7294197	Firestone Brand Required		1,158.00
70-T0010	7294198	Trelleborg Brand Required		1,158.00
FRONT AND REAR TIRES				
		Rear: Single Welded Pressed Steel - Set of 2 ***Front: Fixed Welded Steel Rim***		
75-W1585	7294857B2 7294793	Rear: 710/70R38 R1W (MI, TR, FI) Front: 600/65R28 R1W (MI, TR, FI)		3,135.00
		Rear: Single Semi Dished Cast Centers- Set of 2 ***Front: Waffle Wheel***		
75-Base	7294871B2 7294767	Rear: 480/80R46 R1W (18.4R46 R1W) (MI) Front: 420/90R30 R1W (MI)		**In Base**
75-W1485	7294870B2 7294766	Rear: 520/85R42 R1W (20.8R42 R1W) (MI, TR) Front: 420/85R30 R1W (16.9R30 R1W) (MI, TR)		(129.00)
75-W1398	7294870B2 7294770	Rear: 520/85R42 R1W (20.8R42 R1W) (MI, TR) Front: 380/85R34 R1W (14.9R34 R1W) (MI, TR)		64.00
75-W1384	7294882B2 7294762	Rear: 480/80R42 R1W (18.4R42 R1W) (MI, TR) Front: 420/85R28 (16.9R28 R1W) R1W (MI, TR)		(1,004.00)
75-W1377	7294882B2 7294765	Rear: 480/80R42 R1W (18.4R42 R1W) (MI, TR) Front: 380/85R30 (14.9R30) R1W (MI, TR)		(1,625.00)
75-W1626	7294871B2 7294766	Rear: 480/80R46 R1W (18.4R46 R1W) (MI, TR) Front: 420/85R30 (16.9R30) R1W (MI, TR)		(440.00)
75-W1349	7294871B2 7294770	Rear: 480/80R46 R1W (18.4R46 R1W) (MI, TR) Front: 380/85R34 (14.9R34) R1W (MI, TR)		(247.00)
		Rear: Dual Cast Inner / Steel Outer - Set of 4 ***Front: Waffle Wheel***		
75-W1386	7294886B2 7294762	Duals: 480/80R42 R1W (18.4R42 R1W) (MI, TR) Front: 420/85R28 R1W (16.9R28 R1W) (MI, TR)		5,522.00
75-W1380	7294886B2 7294765	Duals: 480/80R42 R1W (18.4R42 R1W) (MI, TR) Front: 380/85R30 R1W (MI, TR)		4,901.00
75-W1596	7294863B2 7294766	Duals: 520/85R42 R1W (20.8R42 R1W) (MI, TR) Front: 420/85R30 R1W (16.9R30 R1W) (MI, TR)		8,071.00
75-W1399	7294863B2 7294770	Duals: 520/85R42 R1W (20.8R42 R1W) (MI, TR) Front: 380/85R34 R1W (14.9R34 R1W) (MI, TR)		8,264.00
75-W1627	7294864B2 7294766	Duals: 480/80R46 R1W (18.4R46 R1W) (MI, TR) Front: 420/85R30 R1W (16.9R30 R1W) (MI, TR)		7,535.00
75-W1414	7294864B2 7294767	Duals: 480/80R46 R1W (18.4R46 R1W) (MI) Front: 420/90R30 R1W (MI)		7,975.00
75-W1401	7294864B2 7294770	Duals: 480/80R46 R1W (18.4R46 R1W) (MI) Front: 380/85R34 R1W (14.9R34 R1W) (MI)		7,728.00
75-W1404	7294868B2 7294773	Duals: 320/90R54 R1W (MI) Front: 320/85R38 R1W (MI)		8,297.00
75-W1745	7294866B2 7294770	Duals: 380/90R50 R1W (14.9R50 R1W) (FI) Front: 380/85R34 R1W (14.9R34 R1W) (FI)		7,013.00

SUBJECT TO AVAILABILITY

7600 LARGE FRAME CLASSIC EDITION

MASSEY FERGUSON®

Mississippi State Contract Discount: 25%

(F.O.B. PORT OF ENTRY)

Order Code	Catalog Number	Description	Approx. Weight (lb.)	List Price
FRONT HITCH				
230-FA000	Base	Less Front Hitch		**In Base**
230-F1120	7293366	4000 KG Front Linkage w/ 1 Set of Hydraulic Couplers		7,042.00
230-F1121	7293368	4000 KG Front Linkage w/ 2 sets of Hydraulic Couplers		8,076.00
230-F1129	7293565	4000 KG Front Linkage with 1 set of Hydraulic Couplers with Pressure Drain		7,189.00
CAB				
365-AF009	7294248	Radio, AM/FM, MP3 Compatible		602.00
115-AM084	7293559	Mechanical Cab Suspension		1,639.00
FRONT WEIGHTS				
285-YA112	7293487	121 LBS (55 KGS) Front Weights, Set of 12 with Hardware - total Weight 1,455 LBS (660 KGS)		2,228.00
REAR WHEEL WEIGHTS				
325-RD040	7294192	551 LBS (250 KGS) Weights, Set of 2 Mounts Externally to Wheel	1102	1,791.00
325-RD041	7294200	551 LBS (250 KGS) Weights, Set of 4 Mounts Externally to Wheel	2204	3,582.00
BELLY AND HITCH WEIGHTS				
245-YD001	7293374	1 Belly Weight - 584 LBS (265 KGS) (For use **WITHOUT** Front 3-Point Hitch)	584	1,447.00
245-YD001	7293375	1 Belly Weight - 430 LBS (195 KGS) (For use **WITH** Front 3-Point Hitch)	430	1,064.00
345-YB003	7294119	1873 LBS (850 KGS) 3-Point Hitch Weight (For use with Front 3-Point Hitch or Rear 3-Point Hitch without Quick Hitch)	1984	3,307.00
345-YB004	7294120	1873 LBS (850 KGS) plus 1323 LBS (600 KGS) (3-Point Linkage Weight -total of 1500 KGS in weight) For use with Front 3-Point Hitch or Rear 3-Point Hitch without Quick Hitch)	3307	5,512.00
ELECTRICAL				
215-CB002	7293087	Engine Block Heater - 110 Volt		146.00
265-EF005	7293363	Engine Side Rails		989.00
ALTERNATOR				
220-CE020	Base	175 AMP Alternator. (Not Available with ISOBUS.)		**In Base**
220-CE019	7293533	Twin 120 AMP Alternators.		380.00
LIGHTING				
205-VF013	7293103	Dual Roof-Mounted Rotating Beacons, Left and Right (Includes SAE SMV sign)		502.00
195-VG078	7295103	2 Xenon and 2 Single Bulb Front Worklights, 2 Xenon Rear Worklights		3,293.00
190-VK004	7293597	Worklights on Handrails and Rear Fenders		522.00

SUBJECT TO AVAILABILITY

7600 LARGE FRAME CLASSIC EDITION

Mississippi State Contract Discount: 25%

MASSEY FERGUSON®

(F.O.B. PORT OF ENTRY)

Order Code	Catalog Number	Description	Approx. Weight (lb.)	List Price
PIVOTING FRONT FENDERS				
155-WE000	Base	Less Pivoting Front Fenders		**In Base**
155-WE110	7294204	Pivoting Front Fenders - Standard Width . . . . . Width depends on tire selection; see Chart Below		1,633.00

Fender Size		
Standard	**Wide**	**Tire Sizes**
320 mm	355 mm	320/85R34 (12.4R34) 320/85R38 (12.4R38)
380 mm	410 mm	380/85R30 (14.9R30) 380/85R34 (14.9R34) 400/80R28
410 mm	470 mm	420/85R28 (16.9R28) 420/85R30 (16.9R30) 420/90R30
470 mm	520 mm	480/70R30
520 mm	620 mm	540/65R28 540/65R30
620 mm	700 mm	600/65R2 710/55R30

REAR FENDERS				
255-WD012	Base	Rear Fenders without Extensions, 78.74" (2.00 M) . . .		**In Base**
255-WD017	7293107*	Wide Fender -90.55" (2.3 M) with Rear Extension . . .		1,272.00
255-WD020	7293109*	Extra Wide Fender -100.4" (2.55 M) . . . . . with Rear Extension		1,421.00

*** Not Compatible with Category 3 Fixed Ball End Links with Category 3/3N Quick Hitch, In Base Option**

SUBJECT TO AVAILABILITY

7600 LARGE FRAME CLASSIC EDITION

Mississippi State Contract Discount: 25%

(F.O.B. PORT OF ENTRY)

Order Code	Catalog Number	Description	Approx. Weight (lb.)	List Price
MISCELLANEOUS				
35-EN001	7293092	Creeper Gear (4:1 Reduction)		2,297.00
250-GS001	7293100	Hydraulic Trailer Brakes		785.00
250-GS062	7293551	Pneumatic Trailer Brakes		6,505.00
250-GS067	7293552	Pneumatic & Hydraulic Trailer Brakes		7,289.00
225-LQ001	7293553	Water Separator (Fuel Filter)		448.00
275-TC005	7294210	French Language OIB		No Charge
275-TC011	7294211	Spanish Language OIB		No Charge

DEALER INSTALLED OPTIONS

FRONT WEIGHTS

BEAUVAIS BUILT

	5020186M	8 x 55kg (121 lbs.) Front Weights	968	1,485.00
	5020187M	10 x 55kg (121 lbs.) Front Weights	1210	1,857.00
	5020188M	12 x 55kg (121 lbs.) Front Weights	1452	2,228.00
	5020189M	14 x 55kg (121 lbs.) Front Weights	1694	2,600.00

SUBJECT TO AVAILABILITY

MASSEY FERGUSON®

RESERVED PAGE

7600 LARGE FRAME DELUXE EDITION

Mississippi State Contract Discount: 25%

(F.O.B. PORT OF ENTRY)

DELUXE EDITION FEATURES

ENGINE

7619/7620 DYNA-6, 7619/7620/7622 DYNA-VT:
AGCO POWER 6.6L (403 cu in.) 6 Cylinder, Tier 4i Compliant
- e3 SCR Technology
- Air-to-Air Aftercooled, Common Rail Injection, Turbocharged

7622/7624/7626 DYNA-6, 7624 DYNA-VT:
AGCO POWER 7.4L (452 cu in.) 6 Cylinder, Tier 4i Compliant
- e3 SCR Technology
- Air-to-Air Aftercooled, Common Rail Injection, Turbocharged

Electronic Engine Management (EEM) with Dual ERPM Settings
Electronic Controlled Viscous Fan Drive
Dual Element Dry Type Air Cleaner
Vertical Exhaust at Right Front Cab Post
Cooling System: Antifreeze to Minus 30°F (-34°C)
Fuel Tank Capacity: 114 Gal (431.5L)
DEF Tank Capacity: 11 Gal (40L)

POWERTRAIN

DYNA-VT TRANSMISSION:
- Continuously Variable Transmission, 60 ft/h to 25 MPH (18.2 Meters/h to 40 KPH)
- Dynamic Tractor Management (DTM) with Two Programmable Cruise Speeds
- Long Bar Rear Axle 118 in. (2997mm) long, 3.74 in. (95mm) Diameter

DYNA-6 TRANSMISSION:
- 24F/24R Semi-Powershift, 4 Ranges with 6 Powershifts per Range
- Dynamic Tractor Management (DTM) with Two Programmable Cruise Speeds

7619/7620/7622: Long Bar Rear Axle 112 in. (2847mm) Long, 3.74 in. (95mm) Diameter
7624/7626: Long Bar Rear Axle 118.2 in. (3002mm) Long, 4.33 in. (110mm) Diameter
Multi-Disc Wet Brakes
Power Differential Lock
Independent PTO
DYNA-VT: 540/540E/1000 RPM Flanged Shaft, 540 with 6 Spline and 1000 with 21 Spline
DYNA-6: 540/540E/1000 RPM Exchangeable Shaft, 540 with 6 Spline and 1000 with 21 Spline
Rear Fender Mounted PTO Shut-Off
SV1 & SV2 Settings

FRONT WHEEL ASSIST AXLE

Power Front Axle (PFA)
Suspended Front Axle
Shielded Center Drive Line with Electro-Hydraulic Control & Front Wheel Drive Differential Lock
55 Degree Steering Angle
SpeedSteer

HYDRAULICS

Closed Center Load Sensing 29 gpm (110 L/Min) Pump
2900 PSI (200 Bar) Maximum Pressure
2 Electric Valves - Fingertip Controlled on Armrest, 2 Mechanical Valves – Lever Controlled on Right Hand Console
Hydrostatic Power Steering
Power Beyond

ELECTRICAL SYSTEM

2 – 120 Amp Alternators
2 – 12V Batteries, 600 CCA Each (SAE)
7 Pin ASAE Rear Trailer Electrical Outlet
Electrical Isolator Switch and Jumpstart Point
Ignition with Neutral Start and Key Shutoff

HITCH

3 Point Hitch: Category 3 Linkage Ball Ends with Quick Hitch
- Active Transport Control
- Lower Link Sensing
- Electronic Draft Control, Electronic Height Control and Rate of Drop
- Rub Block Stabilizers
- Left and Right Side External 3 Point Control

Drawbar: Category 2, Clevis and Drop Pin

LIGHTING

8 Front Hood Mounted Lights
Four Front Single Bulb Worklights
Two Rear Double Bulb Worklights
Two Field Lights on Hand Rails and Rear Fenders with Taillights, Flashing Warning Lights, and Turn Signals

INSTRUMENTS

Control Center Display (CCD)
- Video Input
- Electric Valve Control
- ISOBUS Compliant

Radar with Slip Control
Tachometer: Digital and Analog
PTO Speed: Digital
Ground Speed Display: Digital
Fuel Level, DEF Level, and Coolant Temp Gauges
Warning/Information Lights

OPERATOR AREA

OptiRide Cab Suspension
6 Post Cab
Transmission Control T-Handle on Armrest
Adjustable Steering Column
Front Sun Visor
Air Conditioning and Heater
Air Suspended Seat - Automatic Adjustment
Front and Rear Windshield Wiper/Washer
Dual Large Telescoping Outside Rear View Mirrors
Single Inside Rear View Mirror
Radio with AM/FM/CD/MP3/Bluetooth and 2 Audio Speakers and Antenna
3 Pin 12V Power Outlet
12V Cigarette Lighter Style Power Outlet
ISO 11783 9-Pin in Cab Connector
ISO 11786 7-Pin in Cab Connector

WHEELS AND TIRES

7619/7620/7622
Rear 480/80R42 R1W Single Semi-Dished Cast Center Wheels
Front 420/85R28 R1W Single Waffle Wheels

7624/7626
Rear 480/80R46 R1W Single Semi-Dished Cast Center Wheels
Front 420/90R30 R1W Single Waffle Wheels

OTHER STANDARD FEATURES

Auto-Steer Ready
AGCOMMAND Ready with Antenna, Bracket, and Harness (To Complete, See Technology Section)
Lockable Tool Box
SMV Sign
Molded Rear Fenders
English Literature

SUBJECT TO AVAILABILITY

7600 LARGE FRAME DELUXE EDITION

Mississippi State Contract Discount: 25%

MASSEY FERGUSON®

(F.O.B. PORT OF ENTRY)

Order Code	Catalog Number	Description	Approx. Weight (lb.)	List Price

ONE *ORDER CODE* FROM EACH GROUP MUST BE SPECIFIED. (Unless In Base Option is desired)

BASE MACHINE

DYNA-6 EDITIONS-- Beauvais Built

MF7619~D6~EF~02	7295110	Massey 7619 Deluxe Tractor 140 PTO HP	172,818.00
MF7620~D6~EF~02	7295111	Massey 7620 Deluxe Tractor 150 PTO HP	178,828.00
MF7622~D6~EF~02	7295112	Massey 7622 Deluxe Tractor 165 PTO HP	187,842.00
MF7624~D6~EF~02	7295113	Massey 7624 Deluxe Tractor 180 PTO HP	198,178.00
MF7626~D6~EF~02	7295114	Massey 7626 Deluxe Tractor 195 PTO HP	206,930.00

DYNA-VT EDITIONS-- Jackson Built*

MF7619~DV~EF~02	7293684	Massey 7619 Deluxe Tractor 140 PTO HP	183,851.00
MF7620~DV~EF~02	7293685	Massey 7620 Deluxe Tractor 150 PTO HP	189,861.00
MF7622~DV~EF~02	7293686	Massey 7622 Deluxe Tractor 165 PTO HP	198,875.00
MF7624~DV~EF~02	7293687	Massey 7624 Deluxe Tractor 180 PTO HP	209,212.00

***16 weeks out for changes on Jackson Built Models**

TRANSMISSION OPTIONS FOR DYNA-6 EDITIONS

25-EA655	Base	6x4 Dyna-6 Transmission with 24F/24R gears. . . . 25 MPH (40 KPH) with Dynamic Tractor Management (DTM)	**In Base**
25-G1063	7293524	6X4 Dyna-6 Transmission with 24F/24R gears. . . . 31 MPH (50 KPH) with Dynamic Tractor Management (DTM). Also includes: High Pressure Brakes. (Not Compatible with Power Front Axle, NA030)	1,585.00

TRANSMISSION OPTIONS FOR DYNA-VT EDITIONS

25-EA621	Base	Dyna-VT Transmission - 25 MPH (40 KPH) . . . . . (Not Compatible with Power Front Axle, NA030)	**In Base**
25-EA622	7293525	Dyna-VT Transmission - 31 MPH (50 KPH) . . . . . (Not Compatible with Power Front Axle, NA030)	775.00

EQUIPMENT REQUIRED FOR NORTH AMERICA

	7293488	Instructional Seat	472.00
	7293489	Front Weight Carrier . . . . . . (Removed when factory installed front 3-Point Hitch is selected.)	304.00

SUBJECT TO AVAILABILITY

7600 LARGE FRAME DELUXE EDITION

Mississippi State Contract Discount: 25%

(F.O.B. PORT OF ENTRY)

Order Code	Catalog Number	Description	Approx. Weight (lb.)	List Price
AUXILIARY HYDRAULIC FLOW				
370-DP110	Base	29 GPM (110 L/min) Closed Center Load Sensing . . .		**In Base**
370-DP150	7293529	39 GPM (150 L/min) Closed Center Load Sensing . . .		1,327.00
AUXILIARY VALVE 1 & 2				
50-KX011	Base	Valves 1 and 2 Electric, Fingertip Controlled Spool Valves Fingertips Located in Armrest		**In Base**
50-KX012	7293530	Valves 1 and 2 Electric, with Multifunction Joystick on the Armrest (Required when Choosing Factory Installed Loader Provisions (LL004))		No Charge

TO UTILIZE THE FACTORY INSTALLED MULTIFUNCTION JOYSTICK WITH A LOADER, THE TRACTOR MUST BE EQUIPPED WITH THE LOADER PROVISIONS FROM THE FACTORY.

AUXILIARY VALVE 3 & 4				
55-MU012	Base	3rd and 4th Mechanically Controlled Valves, ... with levers located in Right Hand Console Kickout, Zero Leak, Flow Dividing, Float		**In Base**
55-MU003	7293532	3rd Valve only, Mechanically Controlled. . . . . . with Lever located in Right Hand Console Kickout, Zero Leak, Flow Dividing, Float		(1,136.00)
55-MU031	7293676	3rd and 4th Electric, Fingertip Controlled Valves . . . . with Fingertips located on Right Hand Console		1,318.00
POWER BEYOND				
90-GR010	Base	Power Beyond Couplers P/T/LS/D		**In Base**
90-GR000	7293665	Less Power Beyond . . . . . . (Only available with Front Loader Provision LL004)		(716.00)
FRONT AXLE				
65-Base	Base	Suspended Power Front Axle		**In Base**
65-NA030	7293535	Non-Suspended Power Front Axle . . . . . . (Not Compatible with 31 MPH (50 KPH) Dyna-6 or Dyna-VT Transmissions)		(6,898.00)
REAR AXLE				
DYNA-6				
FOR 7619 - 7622				
60-EE404	Base	Long Bar Rear Axle, 112 in. (2847 mm) long . . . . . . 3.74 in. (95 mm) diameter		**In Base**
60-EE402	7293527	Short Bar Rear Axle, 84.4 in. (2144 mm) long . . . . . 3.74 in. (95 mm) diameter		(591.00)
FOR 7624 / 7626				
60-EE405	Base	Long Bar Rear Axle, 118.2 in. (3002 mm) long . . . . . 4.33 in. (110 mm) diameter		**In Base**
60-EE403	7293528	Short Bar Rear Axle, 86.7 in. (2202 mm) long . . . . . 4.33 in. (110 mm) diameter		(591.00)
DYNA-VT				
60-EE404	Base	Long Bar Rear Axle, 118 in. (2997mm) long, ... 3.74 in. (95 mm) diameter		**In Base**
60-EE402	7293527	Short Bar Rear Axle, 89.6 in. (2277 mm) long. . . . . . 3.74 in. (95 mm) diameter		(591.00)

SUBJECT TO AVAILABILITY

7600 LARGE FRAME DELUXE EDITION

Mississippi State Contract Discount: 25%

MASSEY FERGUSON®

(F.O.B. PORT OF ENTRY)

Order Code	Catalog Number	Description	Approx. Weight (lb.)	List Price
REAR 3-POINT HITCH				
95-GC210	Base	Category 3 Fixed Ball End Links with Category 3/3N Quick Hitch (Not Compatible with Wide Rear Fenders, WD017 or WD020)		**In Base**
95-GC209	7293562	Category 3 Fixed Ball End Links		(1,307.00)
INSTRUMENT PANEL / CONTROL CENTER DISPLAY (CCD)				
LESS AUTO-STEERING READY				
175-BA003	7293556	Analog and Digital Instrument Panel with Radar . . . . (For Actual Ground Speed) and Slip Control. No Control Center Display (CCD).		(5,119.00)
175-BA005	7293557	Analog and Digital Instrument Panel w/o Radar or Slip . Control. No Control Center Display (CCD).		(5,927.00)
175-BA008	7293563	Analog and Digital Instrument Panel, Control Center . . Display (CCD) with Video Input, Electric Valve Control, Radar with Slip Control and ISOBUS.		(145.00)
AUTO-STEERING READY				
175-Base	Base*	Analog and Digital Instrument Panel, Control Center . . Display (CCD) with Video Input, Electric Valve Control, Radar with Slip Control and ISOBUS. *Order Auto-Guide™ 3000 TopDock Separately* *See Technology Section*		**In Base**
175-BA016	7293538*	Analog and Digital Instrument Panel, Radar with Slip . . Control, Auto-Steering Ready. No Control Center Display (CCD). *Order Auto-Guide™ 3000 TopDock Separately* *See Technology Section*		(4,659.00)
		*Includes Roof Plate and Wiring Harness		

Note: The Control Center Display (CCD) is required to utilize Auto-Guide™ 3000.

AUTO-STEERING COMPLETE				
175-BA021	7293677	Analog and Digital Instrument Panel, Control Center . . Display (CCD) with Video Input, Electric Valve Control, and ISOBUS. Radar with Slip Control. Auto-Guide™ 3000 Sub-Meter (WAAS and OmniStar VBS) Auto Steering System. (Requires SpeedSteer) Auto-Guide™ 3000 uses the Control Center Display (CCD).		6,035.00
SPEEDSTEER				
185-AD004	Base	SpeedSteer Option		**In Base**
185-AD002	7293558	Less SpeedSteer . . . . . (Not Available with Base, BA021 or BA016 Instrument Control Panel)		(900.00)

SUBJECT TO AVAILABILITY

(F.O.B. PORT OF ENTRY)

Order Code	Catalog Number	Description	Approx. Weight (lb.)	List Price

TIRES for 7619, 7620 and 7622 with Dyna-6 Transmission

TIRE BRAND SELECTION

70-Blank	7294212	Factory Brand Choice		No Charge
70-T0001	7294195	Michelin Brand Required		1,552.00
70-T0007	7294197	Firestone Brand Required		1,158.00
70-T0010	7294198	Trelleborg Brand Required		1,158.00

FRONT AND REAR TIRES

Rear: Single Welded Pressed Steel - Set of 2
Front: Fixed Welded Steel Rim

75-W1673	7294905B3 7294791B1	Rear: 540/80R38 Industrial (NO) Front: 440/80R28 Industrial (NO)		6,671.00
75-W1585	7294857B3 7294793B1	Rear: 710/70R38 R1W (MI, TR, FI) Front: 600/65R28 R1W (MI, TR, FI)		4,139.00

Rear: Single Semi Dished Cast Centers- Set of 2
Front: Waffle Wheel

75-Base	7294882B3 7294762B1	Rear: 480/80R42 R1W (18.4R42 R1W) (MI, TR) Front: 420/85R28 R1W (16.9R28 R1W) (MI, TR)		**In Base**
75-W1377	7294882B3 7294765B1	Rear: 480/80R42 R1W (18.4R42 R1W) (MI, TR) Front: 380/85R30 R1W (MI, TR)		(621.00)
75-W1485	7294870B3 7294766B1	Rear: 520/85R42 R1W (20.8R42 R1W) (MI, TR) Front: 420/85R30 R1W (16.9R30 R1W) (MI, TR)		875.00
75-W1398	7294870B3 7294770B1	Rear: 520/85R42 R1W (20.8R42 R1W) (MI, TR) Front: 380/85R34 R1W (14.9R34 R1W) (MI, TR)		1,068.00
75-W1626	7294871B3 7294766B1	Rear: 480/80R46 R1W (18.4R46 R1W) (MI, TR) Front: 420/85R30 R1W (16.9R30 R1W) (MI, TR)		564.00
75-W1413	7294871B3 7294767B1	Rear: 480/80R46 R1W (18.4R46 R1W) (MI) Front: 420/90R30 R1W (MI)		1,004.00
75-W1349	7294871B3 7294770B1	Rear: 480/80R46 R1W (18.4R46 R1W) (MI, TR) Front: 380/85R34 R1W (14.9R34 R1W) (MI, TR)		757.00
75-W1802	7294911B3 7294770B1	Rear: 380/90R50 R1W (14.9R50 R1W) (FI) Front: 380/85R34 R1W (14.9R34 R1W) (FI)		1,505.00
75-W1354	7294875B3 7294773B1	Rear: 320/90R54 R1W (MI) Front: 320/85R38 R1W (MI)		3,237.00

SUBJECT TO AVAILABILITY

(F.O.B. PORT OF ENTRY)

Order Code	Catalog Number	Description	Approx. Weight (lb.)	List Price

TIRES for 7619, 7620 and 7622 with Dyna-6 Transmission

FRONT AND REAR TIRES - CONTINUED

Rear: Dual Cast Inner / Steel Outer - Set of 4
Front: Waffle Wheel

75-W1386	7294886B3	Duals: 480/80R42 R1W (18.4R42 R1W) (MI, TR)		6,526.00
	7294762B1	Front: 420/85R28 R1W (16.9R28 R1W) (MI, TR)		
75-W1380	7294886B3	Duals: 480/80R42 R1W (18.4R42 R1W) (MI, TR)		5,905.00
	7294765B1	Front: 380/85R30 R1W (MI, TR)		
75-W1596	7294863B3	Duals: 520/85R42 R1W (20.8R42 R1W) (MI, TR)		9,075.00
	7294766B1	Front: 420/85R30 R1W (16.9R30 R1W) (MI, TR)		
75-W1399	7294863B3	Duals: 520/85R42 R1W (20.8R42 R1W) (MI, TR)		9,268.00
	7294770B1	Front: 380/85R34 R1W (14.9R34 R1W) (MI, TR)		
75-W1627	7294864B3	Duals: 480/80R46 R1W (18.4R46 R1W) (MI, TR)		8,540.00
	7294766B1	Front: 420/85R30 R1W (16.9R30 R1W) (MI, TR)		
75-W1414	7294864B3	Duals: 480/80R46 R1W (18.4R46 R1W) (MI)		8,980.00
	7294767B1	Front: 420/90R30 R1W (MI)		
75-W1401	7294864B3	Duals: 480/80R46 R1W (18.4R46 R1W) (MI, TR)		8,733.00
	7294770B1	Front: 380/85R34 R1W (14.9R34 R1W) (MI, TR)		
75-W1745	7294866B3	Duals: 380/90R50 R1W (14.9R50 R1W) (FI)		8,018.00
	7294770B1	Front: 380/85R34 R1W (14.9R34 R1W) (FI)		
75-W1404	7294868B3	Duals: 320/90R54 R1W (MI)		9,302.00
	7294773B1	Front: 320/85R38 R1W (MI)		

SUBJECT TO AVAILABILITY

(F.O.B. PORT OF ENTRY)

Order Code	Catalog Number	Description	Approx. Weight (lb.)	List Price

TIRES for 7624 and 7626 with Dyna-6 Transmission

TIRE BRAND SELECTION

70-Blank	7294212	Factory Brand Choice		No Charge
70-T0001	7294195	Michelin Brand Required		1,552.00
70-T0007	7294197	Firestone Brand Required		1,158.00
70-T0010	7294198	Trelleborg Brand Required		1,158.00

FRONT AND REAR TIRES

		Rear: Single Welded Pressed Steel - Set of 2 ***Front: Fixed Welded Steel Rim***		
75-W1585	7294857B2 7294793	Rear: 710/70R38 R1W (MI, TR, FI) Front: 600/65R28 R1W (MI, TR, FI)		3,135.00
		Rear: Single Semi Dished Cast Centers- Set of 2 ***Front: Waffle Wheel***		
75-Base	7294871B2 7294767	Rear: 480/80R46 R1W (18.4R46 R1W) (MI) Front: 420/90R30 R1W (MI)		**In Base**
75-W1485	7294870B2 7294766	Rear: 520/85R42 R1W (20.8R42 R1W) (MI, TR) Front: 420/85R30 R1W (16.9R30 R1W) (MI, TR)		(129.00)
75-W1398	7294870B2 7294770	Rear: 520/85R42 R1W (20.8R42 R1W) (MI, TR) Front: 380/85R34 R1W (14.9R34 R1W) (MI, TR)		64.00
75-W1384	7294882B2 7294762	Rear: 480/80R42 R1W (18.4R42 R1W) (MI, TR) Front: 420/85R28 (16.9R28 R1W) R1W (MI, TR)		(1,004.00)
75-W1377	7294882B2 7294765	Rear: 480/80R42 R1W (18.4R42 R1W) (MI, TR) Front: 380/85R30 (14.9R30) R1W (MI, TR)		(1,625.00)
75-W1626	7294871B2 7294766	Rear: 480/80R46 R1W (18.4R46 R1W) (MI, TR) Front: 420/85R30 (16.9R30) R1W (MI, TR)		(440.00)
75-W1349	7294871B2 7294770	Rear: 480/80R46 R1W (18.4R46 R1W) (MI, TR) Front: 380/85R34 (14.9R34) R1W (MI, TR)		(247.00)
		Rear: Dual Cast Inner / Steel Outer - Set of 4 ***Front: Waffle Wheel***		
75-W1386	7294886B2 7294762	Duals: 480/80R42 R1W (18.4R42 R1W) (MI, TR) Front: 420/85R28 R1W (16.9R28 R1W) (MI, TR)		5,522.00
75-W1380	7294886B2 7294765	Duals: 480/80R42 R1W (18.4R42 R1W) (MI, TR) Front: 380/85R30 R1W (MI, TR)		4,901.00
75-W1596	7294863B2 7294766	Duals: 520/85R42 R1W (20.8R42 R1W) (MI, TR) Front: 420/85R30 R1W (16.9R30 R1W) (MI, TR)		8,071.00
75-W1399	7294863B2 7294770	Duals: 520/85R42 R1W (20.8R42 R1W) (MI, TR) Front: 380/85R34 R1W (14.9R34 R1W) (MI, TR)		8,264.00
75-W1627	7294864B2 7294766	Duals: 480/80R46 R1W (18.4R46 R1W) (MI, TR) Front: 420/85R30 R1W (16.9R30 R1W) (MI, TR)		7,535.00
75-W1414	7294864B2 7294767	Duals: 480/80R46 R1W (18.4R46 R1W) (MI) Front: 420/90R30 R1W (MI)		7,975.00
75-W1401	7294864B2 7294770	Duals: 480/80R46 R1W (18.4R46 R1W) (MI) Front: 380/85R34 R1W (14.9R34 R1W) (MI)		7,728.00
75-W1404	7294868B2 7294773	Duals: 320/90R54 R1W (MI) Front: 320/85R38 R1W (MI)		8,297.00
75-W1745	7294866B2 7294770	Duals: 380/90R50 R1W (14.9R50 R1W) (FI) Front: 380/85R34 R1W (14.9R34 R1W) (FI)		7,013.00

SUBJECT TO AVAILABILITY

(F.O.B. PORT OF ENTRY)

Order Code	Catalog Number	Description	Approx. Weight (lb.)	List Price

TIRES for 7619, 7620 and 7622 with Dyna-VT Transmission

TIRE BRAND SELECTION

70-Blank	7294212	Factory Brand Choice		No Charge
70-T0002	7294196	Goodyear Brand Required		1,158.00
70-T0007	7294197	Firestone Brand Required		1,158.00
70-T0010	7294198	Trelleborg Brand Required		1,158.00

FRONT AND REAR TIRES*

***11 weeks out for changes on Jackson Built Models**

Rear: Single Welded Pressed Steel - Set of 2
Front: Fixed Welded Steel Rim

75-W1585	7294857B3 7294793B1	Rear: 710/70R38 R1W (FI, GY, TR) Front: 600/65R28 R1W (FI, GY, TR)		4,139.00
75-W1716	7294858B3 7294793B1	Rear: 620/70R42 R1W (GY, TR) Front: 600/65R28 R1W (GY, TR)		3,548.00

Rear: Single Semi Dished Cast Centers- Set of 2
Front: Waffle Wheel

75-Base	7294882B3 7294762B1	Rear: 480/80R42 R1W (18.4R42 R1W) (FI, TR) Front: 420/85R28 R1W (16.9R28 R1W) (FI, TR)		**In Base**
75-W1377	7294882B3 7294765B1	Rear: 480/80R42 R1W (18.4R42 R1W) (FI, TR) Front: 380/85R30 R1W (FI, TR)		(621.00)
75-W1485	7294870B3 7294766B1	Rear: 520/85R42 R1W (20.8R42 R1W) (GY, TR) Front: 420/85R30 R1W (16.9R30 R1W) (GY, TR)		875.00
75-W1398	7294870B3 7294770B1	Rear: 520/85R42 R1W (20.8R42 R1W) (GY, TR) Front: 380/85R34 R1W (14.9R34 R1W) (GY, TR)		1,068.00
75-W1626	7294871B3 7294766B1	Rear: 480/80R46 R1W (18.4R46 R1W) (GY, TR) Front: 420/85R30 R1W (16.9R30 R1W) (GY, TR)		564.00
75-W1413	7294871B3 7294767B1	Rear: 480/80R46 R1W (18.4R46 R1W) (FI, GY) Front: 420/90R30 R1W (FI, GY)		1,004.00
75-W1349	7294871B3 7294770B1	Rear: 480/80R46 R1W (18.4R46 R1W) (FI, GY, TR) Front: 380/85R34 R1W (14.9R34 R1W) (FI, GY, TR)		757.00
75-W1802	7294911B3 7294770B1	Rear: 380/90R50 R1W (14.9R50 R1W) (FI, GY) Front: 380/85R34 R1W (14.9R34 R1W) (FI, GY)		1,505.00
75-W1354	7294875B3 7294773B1	Rear: 320/90R54 R1W (GY) Front: 320/85R38 R1W (GY)		3,237.00

SUBJECT TO AVAILABILITY

(F.O.B. PORT OF ENTRY)

Order Code	Catalog Number	Description	Approx. Weight (lb.)	List Price

TIRES for 7619, 7620 and 7622 with Dyna-VT Transmission

FRONT AND REAR TIRES - CONTINUED*

***11 weeks out for changes on Jackson Built Models**

Rear: Dual Cast Inner / Steel Outer - Set of 4
Front: Waffle Wheel

75-W1386	7294886B3	Duals: 480/80R42 R1W (18.4R42 R1W) (FI, TR)		6,526.00
	7294762B1	Front: 420/85R28 R1W (16.9R28 R1W) (FI, TR)		
75-W1380	7294886B3	Duals: 480/80R42 R1W (18.4R42 R1W) (FI, TR)		5,905.00
	7294765B1	Front: 380/85R30 R1W (FI, TR)		
75-W1596	7294863B3	Duals: 520/85R42 R1W (20.8R42 R1W) (GY, TR) . . .		9,075.00
	7294766B1	Front: 420/85R30 R1W (16.9R30 R1W) (GY, TR)		
75-W1399	7294863B3	Duals: 520/85R42 R1W (20.8R42 R1W) (GY, TR) . . .		9,268.00
	7294770B1	Front: 380/85R34 R1W (14.9R34 R1W) (GY, TR)		
75-W1627	7294864B3	Duals: 480/80R46 R1W (18.4R46 R1W) (GY, TR) . . .		8,540.00
	7294766B1	Front: 420/85R30 R1W (16.9R30 R1W) (GY, TR)		
75-W1414	7294864B3	Duals: 480/80R46 R1W (18.4R46 R1W) (FI, GY)		8,980.00
	7294767B1	Front: 420/90R30 R1W (FI, GY)		
75-W1401	7294864B3	Duals: 480/80R46 R1W (18.4R46 R1W) (FI, GY, TR) .		8,733.00
	7294770B1	Front: 380/85R34 R1W (14.9R34 R1W) (FI, GY, TR)		
75-W1745	7294866B3	Duals: 380/90R50 R1W (14.9R50 R1W) (FI, GY)		8,018.00
	7294770B1	Front: 380/85R34 R1W (14.9R34 R1W) (FI, GY)		
75-W1404	7294868B3	Duals: 320/90R54 R1W (GY)		9,302.00
	7294773B1	Front: 320/85R38 R1W (GY)		

SUBJECT TO AVAILABILITY

(F.O.B. PORT OF ENTRY)

Order Code	Catalog Number	Description	Approx. Weight (lb.)	List Price

TIRES for 7624 with Dyna-VT Transmission

TIRE BRAND SELECTION

70-Blank	7294212	Factory Brand Choice	No Charge
70-T0002	7294196	Goodyear Brand Required	1,158.00
70-T0007	7294197	Firestone Brand Required	1,158.00
70-T0010	7294198	Trelleborg Brand Required	1,158.00

FRONT AND REAR TIRES

***11 weeks out for changes on Jackson Built Models**

Rear: Single Welded Pressed Steel - Set of 2
Front: Fixed Welded Steel Rim

75-W1585	7294857B2 7294793	Rear: 710/70R38 R1W (FI, GY, TR) Front: 600/65R28 R1W (FI, GY, TR)	3,135.00
75-W1716	7294858B2 7294793	Rear: 620/70R42 R1W (GY, TR) Front: 600/65R28 R1W (GY, TR)	2,544.00

Rear: Single Semi Dished Cast Centers- Set of 2
Front: Waffle Wheel

75-Base	7294871B2 7294767	Rear: 480/80R46 R1W (18.4R46 R1W) (FI, GY) Front: 420/90R30 R1W (FI, GY)	**In Base**
75-W1384	7294882B2 7294762	Rear: 480/80R42 R1W (18.4R42 R1W) (FI) Front: 420/85R28 (16.9R28 R1W) R1W (FI)	(1,004.00)
75-W1377	7294882B2 7294765	Rear: 480/80R42 R1W (18.4R42 R1W) (FI) Front: 380/85R30 (14.9R30) R1W (FI)	(1,625.00)
75-W1485	7294870B2 7294766	Rear: 520/85R42 R1W (20.8R42 R1W) (GY, TR) Front: 420/85R30 R1W (16.9R30 R1W) (GY, TR)	(129.00)
75-W1398	7294870B2 7294770	Rear: 520/85R42 R1W (20.8R42 R1W) (GY, TR) Front: 380/85R34 (14.9R34) R1W (GY, TR)	64.00
75-W1626	7294871B2 7294766	Rear: 480/80R46 R1W (18.4R46 R1W) (GY, TR) Front: 420/85R30 (16.9R30) R1W (GY, TR)	(440.00)
75-W1349	7294871B2 7294770	Rear: 480/80R46 R1W (18.4R46 R1W) (FI, GY, TR) Front: 380/85R34 (14.9R34) R1W (FI, GY, TR)	(247.00)
75-W1802	7294911B2 7294770	Rear: 380/90R50 R1W (FI, GY) Front: 380/85R34 R1W (FI, GY)	501.00

SUBJECT TO AVAILABILITY

(F.O.B. PORT OF ENTRY)

Order Code	Catalog Number	Description	Approx. Weight (lb.)	List Price

TIRES for 7624 with Dyna-VT Transmission

FRONT AND REAR TIRES - CONTINUED

***11 weeks out for changes on Jackson Built Models**

Rear: Dual Cast Inner / Steel Outer - Set of 4
Front: Waffle Wheel

75-W1386	7294886B2 7294762	Duals: 480/80R42 R1W (18.4R42 R1W) (FI, TR) . . . . Front: 420/85R28 R1W (16.9R28 R1W) (FI, TR)		5,522.00
75-W1380	7294886B2 7294765	Duals: 480/80R42 R1W (18.4R42 R1W) (FI, TR) . . . . Front: 380/85R30 R1W (FI, TR)		4,901.00
75-W1596	7294863B2 7294766	Duals: 520/85R42 R1W (20.8R42 R1W) (GY, TR) . . . Front: 420/85R30 R1W (16.9R30 R1W) (GY, TR)		8,071.00
75-W1399	7294863B2 7294770	Duals: 520/85R42 R1W (20.8R42 R1W) (GY, TR) . . . Front: 380/85R34 R1W (14.9R34 R1W) (GY, TR)		8,264.00
75-W1627	7294864B2 7294766	Duals: 480/80R46 R1W (18.4R46 R1W) (GY, TR) . . . Front: 420/85R30 R1W (16.9R30 R1W) (GY, TR)		7,535.00
75-W1414	7294864B2 7294767	Duals: 480/80R46 R1W (18.4R46 R1W) (FI, GY) . . . . Front: 420/90R30 R1W (FI, GY)		7,975.00
75-W1401	7294864B2 7294770	Duals: 480/80R46 R1W (18.4R46 R1W) (FI, GY, TR) . Front: 380/85R34 R1W (14.9R34 R1W) (FI, GY, TR)		7,728.00
75-W1745	7294866B2 7294770	Duals: 380/90R50 R1W (14.9R50 R1W) (FI, GY) . . . . Front: 380/85R34 R1W (14.9R34 R1W) (FI, GY)		7,013.00
75-W1404	7294868B2 7294773	Duals: 320/90R54 R1W (GY) . . . . . . Front: 320/85R38 R1W (GY)		8,297.00

SUBJECT TO AVAILABILITY

7600 LARGE FRAME DELUXE EDITION

Mississippi State Contract Discount: 25%

MASSEY FERGUSON®

(F.O.B. PORT OF ENTRY)

Order Code	Catalog Number	Description	Approx. Weight (lb.)	List Price
PTO				
100-LA045	Base	540/540E/1000 Speed PTO with in Cab Controls . . . . Two separate shafts, one 6 spline, and one 21 spline		**In Base**
100-LA100	7293536	540E/1000E/1000 Speed PTO with in Cab Controls . . (**Only Available on Dyna-6 Transmissions**)		250.00
FRONT HITCH				
230-FA000	Base	Less Front Hitch		**In Base**
230-F1120	7293366	4000 KG Front Linkage w/ 1 Set of Hydraulic Couplers .		7,042.00
230-F1121	7293368	4000 KG Front Linkage w/ 2 sets of Hydraulic Couplers		8,076.00
230-F1129	7293565	4000 KG Front Linkage with . . . . . 1 set of Hydraulic Couplers with Pressure Drain		7,189.00
LOADER PROVISION				
350-LL000	Base	Less Loader Provisions. . . . . (**Requires In Base Power Beyond**)		**In Base**
350-LL004*	7293484	Front Loader Provisions including Hydraulics, ... Subframe. (**Requires: Valves 1 and 2 Electric with a Joystick (KX012) & Less Power Beyond- GR000 & 29 GPM (110 L/min) Closed Center Load Sensing (DP110)**)		5,853.00

TO EQUIP A TRACTOR WITH THE 39 GPM (150 L/MIN) HYDRAULIC PUMP (DP150) AND LOADER, THE LOADER WILL NEED TO BE PLACED ON A SEPARATE ORDER AND FIELD INSTALLED. CONTACT DEALER CENTRAL FOR INSTRUCTIONS.

TO UTILIZE THE FACTORY INSTALLED MULTIFUNCTION JOYSTICK WITH A LOADER, THE TRACTOR MUST BE EQUIPPED WITH THE LOADER PROVISIONS FROM THE FACTORY.

CAB				
365-AF009	7294249	Radio, AM/FM, MP3 Compatible		(242.00)
125-AE042	7293546	Superluxe Grammar Seat		1,722.00
145-AL009	7293547	Telescopic Large Side Mirrors with Electric . . . . . De-Icing and Adjustment		453.00
120-AQ004	7293082	Automatic Climate Control		1,197.00
115-AM084	7293560	Mechanical Cab Suspension		(2,910.00)
280-GZ001	7293129	Park Lock, Electronic Activated Park . . . . . Brake Mounted on Shuttle Lever		2,621.00

SUBJECT TO AVAILABILITY

7600 LARGE FRAME DELUXE EDITION

Mississippi State Contract Discount: 25%

(F.O.B. PORT OF ENTRY)

Order Code	Catalog Number	Description	Approx. Weight (lb.)	List Price
FRONT WEIGHTS				
285-YA112	7293487	121 LBS (55 KGS) Front Weights, Set of 12 . . . . . with Hardware - total Weight 1,455 LBS (660 KGS)		2,228.00
REAR WHEEL WEIGHTS				
325-RD040	7294192	551 LBS (250 KGS) Weights, Set of 2 . . . . . Mounts Externally to Wheel	1102	1,791.00
325-RD041	7294200	551 LBS (250 KGS) Weights, Set of 4 . . . . . Mounts Externally to Wheel	2204	3,582.00
BELLY AND HITCH WEIGHTS				
245-YD001	7293374	1 Belly Weight - 584 LBS (265 KGS) . . . . . (For use **WITHOUT** Front 3-Point Hitch)	584	1,447.00
245-YD001	7293375	1 Belly Weight - 430 LBS (195 KGS) . . . . . (For use **WITH** Front 3-Point Hitch)	430	1,064.00
345-YB003	7294119	1873 LBS (850 KGS) 3-Point Hitch Weight . . . . . (For use with Front 3-Point Hitch or Rear 3-Point Hitch without Quick Hitch)	1984	3,307.00
345-YB004	7294120	1873 LBS (850 KGS) plus 1323 LBS (600 KGS) . . . . 3-Point Linkage Weight (total of 1500 KGS in weight) (For use with Front 3-Point Hitch or Rear 3-Point Hitch without Quick Hitch)	3307	5,512.00
ELECTRICAL				
215-CB002	7293087	Engine Block Heater - 110 Volt	146.00	
265-EF005	7293363	Drilled Engine Siderails (Additional Mounting Points) . . (Not Compatible with Loader Applications)		989.00
ALTERNATOR				
220-CE019	Base	Twin 120 AMP Alternators.		**In Base**
220-CE020	7293561	175 AMP Alternator. . . . . (Not Available with ISOBUS.)		(380.00)
LIGHTING				
205-VF013	7293103	Dual Roof-Mounted Rotating Beacons, Left and Right . (Includes SAE SMV sign)		502.00
195-VG078	7295103	2 Xenon and 2 Single Bulb Front Worklights, ... 2 Xenon Rear Worklights		3,293.00

SUBJECT TO AVAILABILITY

7600 LARGE FRAME DELUXE EDITION

Mississippi State Contract Discount: 25%

MASSEY FERGUSON®

(F.O.B. PORT OF ENTRY)

Order Code	Catalog Number	Description	Approx. Weight (lb.)	List Price
PIVOTING FRONT FENDERS				
155-WE110	Base	Pivoting Front Fenders - Standard Width . . . . . Width depends on tire selection; see Chart Below		**In Base**
155-WE111	7293598	Pivoting Front Fenders - Wide Width . . . . . Width depends on tire selection; see Chart Below		116.00

Fender Size		
Standard	**Wide**	**Tire Sizes**
320 mm	355 mm	320/85R34 (12.4R34) 320/85R38 (12.4R38)
380 mm	410 mm	380/85R30 (14.9R30) 380/85R34 (14.9R34) 400/80R28
410 mm	470 mm	420/85R28 (16.9R28) 420/85R30 (16.9R30) 420/90R30
470 mm	520 mm	480/70R30
520 mm	620 mm	540/65R28 540/65R30
620 mm	700 mm	600/65R2 710/55R30

REAR FENDERS				
255-WD012	Base	Rear Fenders without Extensions, 78.74"(2.00 M) . . .		**In Base**
255-WD017	7293107*	Wide Fender -90.55" (2.3 M) with Rear Extension . . .		1,272.00
255-WD020	7293109*	Extra Wide Fender -100.4" (2.55 M) . . . . . with Rear Extension		1,421.00

*** Not Compatible with Category 3 Fixed Ball End Links with Category 3/3N Quick Hitch, In Base Option**

SUBJECT TO AVAILABILITY

7600 LARGE FRAME DELUXE EDITION

Mississippi State Contract Discount: 25%

(F.O.B. PORT OF ENTRY)

Order Code	Catalog Number	Description	Approx. Weight (lb.)	List Price
MISCELLANEOUS				
35-EN001	7293092	Creeper Gear (4:1 Reduction) . . . . . **(Available on Dyna-6 Editions Only)**		2,297.00
250-GS001	7293100	Hydraulic Trailer Brakes		785.00
250-GS062	7293551	Pneumatic Trailer Brakes		6,505.00
250-GS067	7293552	Pneumatic and Hydraulic Trailer Brakes		7,289.00
225-LQ001	7293553	Water Separator (Fuel Filter)		448.00
275-TC005	7294210	French Language OIB		No Charge
275-TC011	7294211	Spanish Language OIB		No Charge

DEALER INSTALLED OPTIONS

FRONT WEIGHTS

Beauvais Built

5020186M	8 x 55kg (121 lbs.) Front Weights	968	1,485.00
5020187M	10 x 55kg (121 lbs.) Front Weights	1210	1,857.00
5020188M	12 x 55kg (121 lbs.) Front Weights	1452	2,228.00
5020189M	14 x 55kg (121 lbs.) Front Weights	1694	2,600.00

◆Jackson Built

5020186JM	8 x 55kg (121 lbs.) Front Weights	968	1,485.00
5020187JM	10 x 55kg (121 lbs.) Front Weights	1210	1,857.00
5020188JM	12 x 55kg (121 lbs.) Front Weights	1452	2,228.00
5020189JM	14 x 55kg (121 lbs.) Front Weights	1694	2,600.00
5020190JM	16 x 55 kg (121 lbs.) Front Weights	1936	2,971.00

SUBJECT TO AVAILABILITY

MASSEY FERGUSON®

RESERVED PAGE

7600 LARGE FRAME PREMIUM EDITION

MASSEY FERGUSON®

Mississippi State Contract Discount: 25%

(F.O.B. PORT OF ENTRY)

PREMIUM EDITION FEATURES

ENGINE

7619/7620 DYNA-6, 7619/7620/7622 DYNA-VT:
AGCO POWER 6.6L (403 cu in.) 6 Cylinder, Tier 4i Compliant
- e3 SCR Technology
- Air-to-Air Aftercooled, Common Rail Injection, Turbocharged

7622/7624/7626 DYNA-6, 7624 DYNA-VT:
AGCO POWER 7.4L (452 cu in.) 6 Cylinder, Tier 4i Compliant
- e3 SCR Technology
- Air-to-Air Aftercooled, Common Rail Injection, Turbocharged

Electronic Engine Management (EEM) with Dual ERPM Settings
Electronic Controlled Viscous Fan Drive
Dual Element Dry Type Air Cleaner
Vertical Exhaust at Right Front Cab Post
Cooling System: Antifreeze to Minus 30°F (-34°C)
Fuel Tank Capacity: 114 Gal (431.5L)
DEF Tank Capacity: 11 Gal (40L)

POWERTRAIN

DYNA-VT:
- Continuously Variable Transmission, 60 ft/h to 25 MPH (18.2 Meters/h to 40 KPH)
- Dynamic Tractor Management (DTM) with Two Programmable Cruise Speeds
- Long Bar Rear Axle 118 in. (2997mm) long, 3.74 in. (95mm) Diameter

DYNA-6 TRANSMISSION:
- 24F/24R Semi-Powershift, 4 Ranges with 6 Powershifts per Range
- Dynamic Tractor Management (DTM) with Two Programmable Cruise Speeds

7619/7620/7622: Long Bar Rear Axle 112 in. (2847mm) Long, 3.74 in (95mm) Diameter
7624/7626: Long Bar Rear Axle 118.2 in. (3002mm) Long, 4.33 in. (110mm) Diameter
Multi-Disc Wet Brakes
Power Differential Lock
Independent PTO
DYNA-VT: 540/540E/1000 RPM Flanged Shaft, 540 with 6 Spline and 1000 with 21 Spline with Electric Control
DYNA-6: 540/540E/1000 RPM Exchangeable Shaft, 540 with 6 Spline and 1000 with 21 Spline with Electric Control
Rear Fender Mounted PTO Shut-Off
SV1 & SV2 Settings

FRONT WHEEL ASSIST AXLE

Power Front Axle (PFA)
Suspended Front Axle
Shielded Center Drive Line with Electro-Hydraulic Control & Front Wheel Drive Differential Lock
55 Degree Steering Angle
SpeedSteer

HYDRAULICS

Closed Center Load Sensing 29 gpm (110 L/Min) Pump
2900 PSI (200 Bar) Maximum Pressure
4 Electric Valves - Fingertip Controlled, 2 Located on Armrest, 2 Located Right Hand Console
Hydrostatic Power Steering
Power Beyond

ELECTRICAL SYSTEM

2 – 120 Amp Alternators
2 – 12V Batteries, 600 CCA Each (SAE)
7 Pin ASAE Rear Trailer Electrical Outlet
Electrical Isolator Switch and Jumpstart Point
Ignition with Neutral Start and Key Shutoff

HITCH

3 Point Hitch: Category 3 Linkage Ball Ends with Quick Hitch
- Active Transport Control
- Lower Link Sensing
- Electronic Draft Control, Electronic Height Control, and Rate of Drop
- Rub Block Stabilizers
- Left and Right Side External 3 Point Control

Drawbar: Category 2, Clevis and Drop Pin

LIGHTING

8 Front Hood Mounted Lights
Four Front Single Bulb Worklights
Two Rear Double Bulb Worklights
Two Field Lights on Hand Rails and Rear Fenders with Taillights, Flashing Warning Lights, and Turn Signals

INSTRUMENTS

Control Center Display (CCD)
- Video Input
- Electric Valve Control
- ISOBUS Compliant

Radar with Slip Control
Tachometer: Digital and Analog
PTO Speed: Digital
Ground Speed Display: Digital
Fuel Level, DEF Level, and Coolant Temp Gauges
Warning/Information Lights

OPERATOR AREA

OptiRide Cab Suspension
6 Post Cab
Transmission Control Multicontroller on Armrest
Adjustable Steering Column
Front Sun Visor
Automatic Climate Control
Air Suspended Seat - Automatic Adjustment
Front and Rear Windshield Wiper/Washer
Dual Large Telescoping Outside Rear View Mirrors with De-Icing.
Single Inside Rear View Mirror
Radio with AM/FM/CD/MP3/Bluetooth and 2 Audio Speakers and Antenna
3 Pin 12V Power Outlet
12V Cigarette Lighter Style Power Outlet
ISO 11783 9-Pin in Cab Connector
ISO 11786 7-Pin in Cab Connector

WHEELS AND TIRES

7619/7620/7622
Rear 480/80R42 R1W Single Semi-Dished Cast Center Wheels
Front 420/85R28 R1W Single Waffle Wheels

7624/7626
Rear 480/80R46 R1W Single Semi-Dished Cast Center Wheels
Front 420/90R30 R1W Single Waffle Wheels

OTHER STANDARD FEATURES

Auto-Steer Complete: Auto-Guide™ 3000 Sub-Meter (WAAS and OmniStar VBS)
Auto Steering System using the Control Center Display (CCD)
AGCOMMAND Ready with Antenna, Bracket, and Harness (To Complete, See Technology Section)
Lockable Tool Box
SMV Sign
Molded Rear Fenders
English Literature

SUBJECT TO AVAILABILITY

7600 LARGE FRAME PREMIUM EDITION

Mississippi State Contract Discount: 25%

MASSEY FERGUSON®

(F.O.B. PORT OF ENTRY)

Order Code	Catalog Number	Description	Approx. Weight (lb.)	List Price

ONE *ORDER CODE* FROM EACH GROUP MUST BE SPECIFIED. (Unless In Base Option is desired)

BASE MACHINE

DYNA-6 EDITIONS-- Beauvais Built

MF7619~D6~EX~02	7295115	Massey 7619 Premium Tractor 140 PTO HP		183,437.00
MF7620~D6~EX~02	7295116	Massey 7620 Premium Tractor 150 PTO HP		189,447.00
MF7622~D6~EX~02	7295117	Massey 7622 Premium Tractor 165 PTO HP		198,461.00
MF7624~D6~EX~02	7295118	Massey 7624 Premium Tractor 180 PTO HP		208,530.00
MF7626~D6~EX~02	7295119	Massey 7626 Premium Tractor 195 PTO HP		217,282.00

DYNA-VT EDITIONS-- Jackson Built

MF7619~DV~EX~02	7293688	Massey 7619 Premium Tractor 140 PTO HP		194,470.00
MF7620~DV~EX~02	7293689	Massey 7620 Premium Tractor 150 PTO HP		200,480.00
MF7622~DV~EX~02	7293690	Massey 7622 Premium Tractor 165 PTO HP		209,495.00
MF7624~DV~EX~02	7293691	Massey 7624 Premium Tractor 180 PTO HP		219,563.00

TRANSMISSION OPTIONS FOR DYNA-6 EDITIONS

25-EA655	Base	6x4 Dyna-6 Transmission with 24F/24R gears. . . . 25 MPH (40 KPH) with Dynamic Tractor Management (DTM)		**In Base**
25-G1063	7293524	6X4 Dyna-6 Transmission with 24F/24R gears. . . . 31 MPH (50 KPH) with Dynamic Tractor Management (DTM). Also includes: High Pressure Brakes		1,585.00

TRANSMISSION OPTIONS FOR DYNA-VT EDITIONS

25-EA621	Base	Dyna-VT Transmission - 25 MPH (40 KPH)		**In Base**
25-EA622	7293525	Dyna-VT Transmission - 31 MPH (50 KPH)		775.00

EQUIPMENT REQUIRED FOR NORTH AMERICA

	7293488	Instructional Seat		472.00
	7293489	Front Weight Carrier . . . . . . (Removed when factory installed front 3-Point Hitch is selected.)		304.00

SUBJECT TO AVAILABILITY

7600 LARGE FRAME PREMIUM EDITION

MASSEY FERGUSON®

Mississippi State Contract Discount: 25%

(F.O.B. PORT OF ENTRY)

Order Code	Catalog Number	Description	Approx. Weight (lb.)	List Price
AUXILIARY HYDRAULIC FLOW				
370-DP110	Base	29 GPM (110 L/min) Closed Center Load Sensing . . .		**In Base**
370-DP150	7293529	39 GPM (150 L/min) Closed Center Load Sensing . . .		1,327.00
AUXILIARY VALVE 1 & 2				
50-KX011	Base	Valves 1 and 2 Electric, Fingertip Controlled Spool Valves Fingertips Located in Armrest		**In Base**
50-KX012	7293530	Valves 1 and 2 Electric, with Multifunction Joystick on the Armrest (Required when Choosing Factory Installed Loader Provisions (LL004))		No Charge

TO UTILIZE THE FACTORY INSTALLED MULTIFUNCTION JOYSTICK WITH A LOADER, THE TRACTOR MUST BE EQUIPPED WITH THE LOADER PROVISIONS FROM THE FACTORY.

AUXILIARY VALVE 3, 4 & 5				
55-MU031	Base	3rd and 4th Electric, Fingertip Controlled Valves . . . . with Fingertips located on Right Hand Console		**In Base**
55-MU041	7293534	3rd, 4th, and 5th Electric, Controlled Valves . . . . . . with 3 and 4 Fingertips located on Right Hand Console and the 5th Control located on the Multicontroller Control (**Only Available with Dyna-6 Transmission)**		1,794.00
POWER BEYOND				
90-GR010	Base	Power Beyond Couplers P/T/LS/D		**In Base**
90-GR000	7293665	Less Power Beyond . . . . . . (Only available with Front Loader Provision LL004)		(716.00)
REAR AXLE				
DYNA-6				
FOR 7619 - 7622				
60-EE404	Base	Long Bar Rear Axle, 112 in. (2847 mm) long . . . . . . 3.74 in. (95 mm) diameter		**In Base**
60-EE402	7293527	Short Bar Rear Axle, 84.4 in. (2144 mm) long . . . . . 3.74 in. (95 mm) diameter		(591.00)
FOR 7624/7626				
60-EE405	Base	Long Bar Rear Axle, 118.2 in. (3002 mm) long . . . . . 4.33 in. (110 mm) diameter		**In Base**
60-EE403	7293528	Short Bar Rear Axle, 86.7 in. (2202 mm) long . . . . . 4.33 in. (110 mm) diameter		(591.00)
DYNA-VT				
60-EE404	Base	Long Bar Rear Axle, 118 in. (2997mm) long, ... 3.74 in. (95 mm) diameter		**In Base**
60-EE402	7293527	Short Bar Rear Axle, 89.6 in. (2277 mm) long. . . . . . 3.74 in. (95 mm) diameter		(591.00)

SUBJECT TO AVAILABILITY

7600 LARGE FRAME PREMIUM EDITION

Mississippi State Contract Discount: 25%

MASSEY FERGUSON®

(F.O.B. PORT OF ENTRY)

Order Code	Catalog Number	Description	Approx. Weight (lb.)	List Price
REAR 3-POINT HITCH				
95-GC210	Base	Category 3 Fixed Ball End Links with Category 3/3N Quick Hitch (Not Compatible with Wide Rear Fenders, WD017 or WD020)		**In Base**
95-GC209	7293562	Category 3 Fixed Ball End Links		(1,307.00)
INSTRUMENT PANEL / CONTROL CENTER DISPLAY (CCD)				
LESS AUTO-STEERING READY				
175-BA008	7293679	Analog and Digital Instrument Panel, Control Center . . Display (CCD) with Video Input, Electric Valve Control, Radar with Slip Control and ISOBUS.		(4,973.00)
AUTO-STEERING READY				
175-BA012	7293678	Analog and Digital Instrument Panel, Control Center . . Display (CCD) with Video Input, Electric Valve Control, Radar with Slip Control and ISOBUS. (Includes Roof Plate and Wiring Harness) *Order Auto-Guide™ 3000 TopDock Separately* *See Technology Section*		(4,828.00)
		Note: The Control Center Display (CCD) is required to utilize Auto-Guide™ 3000.		
AUTO-STEERING COMPLETE				
175-BA021	Base	Analog and Digital Instrument Panel, Control Center . . Display (CCD) with Video Input, Electric Valve Control, and ISOBUS. Radar with Slip Control. Auto-Guide™ 3000 Sub-Meter (WAAS and OmniStar VBS) Auto Steering System. (Requires SpeedSteer) Auto-Guide™ 3000 uses the Control Center Display (CCD).		**In Base**
SPEEDSTEER				
185-AD004	Base	SpeedSteer Option		**In Base**
185-AD002	7293558	Less SpeedSteer Option . . . . . (Not Available with BA012 and Base Instrument Control Panel)		(900.00)

SUBJECT TO AVAILABILITY

(F.O.B. PORT OF ENTRY)

Order Code	Catalog Number	Description	Approx. Weight (lb.)	List Price

TIRES for 7619, 7620 and 7622 with Dyna-6 Transmission

TIRE BRAND SELECTION

70-Blank	7294212	Factory Brand Choice	No Charge
70-T0001	7294195	Michelin Brand Required	1,552.00
70-T0007	7294197	Firestone Brand Required	1,158.00
70-T0010	7294198	Trelleborg Brand Required	1,158.00

FRONT AND REAR TIRES

Rear: Single Welded Pressed Steel - Set of 2
Front: Fixed Welded Steel Rim

75-W1673	7294905B3 7294791B1	Rear: 540/80R38 Industrial (NO) Front: 440/80R28 Industrial (NO)	6,671.00
75-W1585	7294857B3 7294793B1	Rear: 710/70R38 R1W (MI, TR, FI) Front: 600/65R28 R1W (MI, TR, FI)	4,139.00

Rear: Single Semi Dished Cast Centers- Set of 2
Front: Waffle Wheel

75-Base	7294882B3 7294762B1	Rear: 480/80R42 R1W (18.4R42 R1W) (MI, TR) Front: 420/85R28 R1W (16.9R28 R1W) (MI, TR)	**In Base**
75-W1377	7294882B3 7294765B1	Rear: 480/80R42 R1W (18.4R42 R1W) (MI, TR) Front: 380/85R30 R1W (MI, TR)	(621.00)
75-W1485	7294870B3 7294766B1	Rear: 520/85R42 R1W (20.8R42 R1W) (MI, TR) Front: 420/85R30 R1W (16.9R30 R1W) (MI, TR)	875.00
75-W1398	7294870B3 7294770B1	Rear: 520/85R42 R1W (20.8R42 R1W) (MI, TR) Front: 380/85R34 R1W (14.9R34 R1W) (MI, TR)	1,068.00
75-W1626	7294871B3 7294766B1	Rear: 480/80R46 R1W (18.4R46 R1W) (MI, TR) Front: 420/85R30 R1W (16.9R30 R1W) (MI, TR)	564.00
75-W1413	7294871B3 7294767B1	Rear: 480/80R46 R1W (18.4R46 R1W) (MI) Front: 420/90R30 R1W (MI)	1,004.00
75-W1349	7294871B3 7294770B1	Rear: 480/80R46 R1W (18.4R46 R1W) (MI, TR) Front: 380/85R34 R1W (14.9R34 R1W) (MI, TR)	757.00
75-W1802	7294911B3 7294770B1	Rear: 380/90R50 R1W (14.9R50 R1W) (FI) Front: 380/85R34 R1W (14.9R34 R1W) (FI)	1,505.00
75-W1354	7294875B3 7294773B1	Rear: 320/90R54 R1W (MI) Front: 320/85R38 R1W (MI)	3,237.00

SUBJECT TO AVAILABILITY

(F.O.B. PORT OF ENTRY)

Order Code	Catalog Number	Description	Approx. Weight (lb.)	List Price

TIRES for 7619, 7620 and 7622 with Dyna-6 Transmission

FRONT AND REAR TIRES - CONTINUED

Rear: Dual Cast Inner / Steel Outer - Set of 4
Front: Waffle Wheel

75-W1386	7294886B3	Duals: 480/80R42 R1W (18.4R42 R1W) (MI, TR)		6,526.00
	7294762B1	Front: 420/85R28 R1W (16.9R28 R1W) (MI, TR)		
75-W1380	7294886B3	Duals: 480/80R42 R1W (18.4R42 R1W) (MI, TR)		5,905.00
	7294765B1	Front: 380/85R30 R1W (MI, TR)		
75-W1596	7294863B3	Duals: 520/85R42 R1W (20.8R42 R1W) (MI, TR)		9,075.00
	7294766B1	Front: 420/85R30 R1W (16.9R30 R1W) (MI, TR)		
75-W1399	7294863B3	Duals: 520/85R42 R1W (20.8R42 R1W) (MI, TR)		9,268.00
	7294770B1	Front: 380/85R34 R1W (14.9R34 R1W) (MI, TR)		
75-W1627	7294864B3	Duals: 480/80R46 R1W (18.4R46 R1W) (MI, TR)		8,540.00
	7294766B1	Front: 420/85R30 R1W (16.9R30 R1W) (MI, TR)		
75-W1414	7294864B3	Duals: 480/80R46 R1W (18.4R46 R1W) (MI)		8,980.00
	7294767B1	Front: 420/90R30 R1W (MI)		
75-W1401	7294864B3	Duals: 480/80R46 R1W (18.4R46 R1W) (MI, TR)		8,733.00
	7294770B1	Front: 380/85R34 R1W (14.9R34 R1W) (MI, TR)		
75-W1745	7294866B3	Duals: 380/90R50 R1W (14.9R50 R1W) (FI)		8,018.00
	7294770B1	Front: 380/85R34 R1W (14.9R34 R1W) (FI)		
75-W1404	7294868B3	Duals: 320/90R54 R1W (MI)		9,302.00
	7294773B1	Front: 320/85R38 R1W (MI)		

SUBJECT TO AVAILABILITY

(F.O.B. PORT OF ENTRY)

Order Code	Catalog Number	Description	Approx. Weight (lb.)	List Price

TIRES for 7624 and 7626 with Dyna-6 Transmission

TIRE BRAND SELECTION

70-Blank	7294212	Factory Brand Choice		No Charge
70-T0001	7294195	Michelin Brand Required		1,552.00
70-T0007	7294197	Firestone Brand Required		1,158.00
70-T0010	7294198	Trelleborg Brand Required		1,158.00

FRONT AND REAR TIRES

		Rear: Single Welded Pressed Steel - Set of 2 ***Front: Fixed Welded Steel Rim***		
75-W1585	7294857B2 7294793	Rear: 710/70R38 R1W (MI, TR, FI) Front: 600/65R28 R1W (MI, TR, FI)		3,135.00
		Rear: Single Semi Dished Cast Centers- Set of 2 ***Front: Waffle Wheel***		
75-Base	7294871B2 7294767	Rear: 480/80R46 R1W (18.4R46 R1W) (MI) Front: 420/90R30 R1W (MI)		**In Base**
75-W1485	7294870B2 7294766	Rear: 520/85R42 R1W (20.8R42 R1W) (MI, TR) Front: 420/85R30 R1W (16.9R30 R1W) (MI, TR)		(129.00)
75-W1398	7294870B2 7294770	Rear: 520/85R42 R1W (20.8R42 R1W) (MI, TR) Front: 380/85R34 R1W (14.9R34 R1W) (MI, TR)		64.00
75-W1384	7294882B2 7294762	Rear: 480/80R42 R1W (18.4R42 R1W) (MI, TR) Front: 420/85R28 (16.9R28 R1W) R1W (MI, TR)		(1,004.00)
75-W1377	7294882B2 7294765	Rear: 480/80R42 R1W (18.4R42 R1W) (MI, TR) Front: 380/85R30 (14.9R30) R1W (MI, TR)		(1,625.00)
75-W1626	7294871B2 7294766	Rear: 480/80R46 R1W (18.4R46 R1W) (MI, TR) Front: 420/85R30 (16.9R30) R1W (MI, TR)		(440.00)
75-W1349	7294871B2 7294770	Rear: 480/80R46 R1W (18.4R46 R1W) (MI, TR) Front: 380/85R34 (14.9R34) R1W (MI, TR)		(247.00)
		Rear: Dual Cast Inner / Steel Outer - Set of 4 ***Front: Waffle Wheel***		
75-W1386	7294886B2 7294762	Duals: 480/80R42 R1W (18.4R42 R1W) (MI, TR) Front: 420/85R28 R1W (16.9R28 R1W) (MI, TR)		5,522.00
75-W1380	7294886B2 7294765	Duals: 480/80R42 R1W (18.4R42 R1W) (MI, TR) Front: 380/85R30 R1W (MI, TR)		4,901.00
75-W1596	7294863B2 7294766	Duals: 520/85R42 R1W (20.8R42 R1W) (MI, TR) Front: 420/85R30 R1W (16.9R30 R1W) (MI, TR)		8,071.00
75-W1399	7294863B2 7294770	Duals: 520/85R42 R1W (20.8R42 R1W) (MI, TR) Front: 380/85R34 R1W (14.9R34 R1W) (MI, TR)		8,264.00
75-W1627	7294864B2 7294766	Duals: 480/80R46 R1W (18.4R46 R1W) (MI, TR) Front: 420/85R30 R1W (16.9R30 R1W) (MI, TR)		7,535.00
75-W1414	7294864B2 7294767	Duals: 480/80R46 R1W (18.4R46 R1W) (MI) Front: 420/90R30 R1W (MI)		7,975.00
75-W1401	7294864B2 7294770	Duals: 480/80R46 R1W (18.4R46 R1W) (MI) Front: 380/85R34 R1W (14.9R34 R1W) (MI)		7,728.00
75-W1404	7294868B2 7294773	Duals: 320/90R54 R1W (MI) Front: 320/85R38 R1W (MI)		8,297.00
75-W1745	7294866B2 7294770	Duals: 380/90R50 R1W (14.9R50 R1W) (FI) Front: 380/85R34 R1W (14.9R34 R1W) (FI)		7,013.00

SUBJECT TO AVAILABILITY

(F.O.B. PORT OF ENTRY)

Order Code	Catalog Number	Description	Approx. Weight (lb.)	List Price

TIRES for 7619, 7620 and 7622 with Dyna-VT Transmission

TIRE BRAND SELECTION

70-Blank	7294212	Factory Brand Choice	No Charge
70-T0002	7294196	Goodyear Brand Required	1,158.00
70-T0007	7294197	Firestone Brand Required	1,158.00
70-T0010	7294198	Trelleborg Brand Required	1,158.00

FRONT AND REAR TIRES

Rear: Single Welded Pressed Steel - Set of 2
Front: Fixed Welded Steel Rim

75-W1585	7294857B3 7294793B1	Rear: 710/70R38 R1W (FI, GY, TR) Front: 600/65R28 R1W (FI, GY, TR)	4,139.00
75-W1716	7294858B3 7294793B1	Rear: 620/70R42 R1W (GY, TR) Front: 600/65R28 R1W (GY, TR)	3,548.00

Rear: Single Semi Dished Cast Centers- Set of 2
Front: Waffle Wheel

75-Base	7294882B3 7294762B1	Rear: 480/80R42 R1W (18.4R42 R1W) (FI, TR) Front: 420/85R28 R1W (16.9R28 R1W) (FI, TR)	**In Base**
75-W1377	7294882B3 7294765B1	Rear: 480/80R42 R1W (18.4R42 R1W) (FI, TR) Front: 380/85R30 R1W (FI, TR)	(621.00)
75-W1485	7294870B3 7294766B1	Rear: 520/85R42 R1W (20.8R42 R1W) (GY, TR) Front: 420/85R30 R1W (16.9R30 R1W) (GY, TR)	875.00
75-W1398	7294870B3 7294770B1	Rear: 520/85R42 R1W (20.8R42 R1W) (GY, TR) Front: 380/85R34 R1W (14.9R34 R1W) (GY, TR)	1,068.00
75-W1626	7294871B3 7294766B1	Rear: 480/80R46 R1W (18.4R46 R1W) (GY, TR) Front: 420/85R30 R1W (16.9R30 R1W) (GY, TR)	564.00
75-W1413	7294871B3 7294767B1	Rear: 480/80R46 R1W (18.4R46 R1W) (FI, GY) Front: 420/90R30 R1W (FI, GY)	1,004.00
75-W1349	7294871B3 7294770B1	Rear: 480/80R46 R1W (18.4R46 R1W) (FI, GY, TR) Front: 380/85R34 R1W (14.9R34 R1W) (FI, GY, TR)	757.00
75-W1802	7294911B3 7294770B1	Rear: 380/90R50 R1W (14.9R50 R1W) (FI, GY) Front: 380/85R34 R1W (14.9R34 R1W) (FI, GY)	1,505.00
75-W1354	7294875B3 7294773B1	Rear: 320/90R54 R1W (GY) Front: 320/85R38 R1W (GY)	3,237.00

SUBJECT TO AVAILABILITY

(F.O.B. PORT OF ENTRY)

Order Code	Catalog Number	Description	Approx. Weight (lb.)	List Price

TIRES for 7619, 7620 and 7622 with Dyna-VT Transmission

FRONT AND REAR TIRES - CONTINUED

Rear: Dual Cast Inner / Steel Outer - Set of 4
Front: Waffle Wheel

75-W1386	7294886B3	Duals: 480/80R42 R1W (18.4R42 R1W) (FI, TR)		6,526.00
	7294762B1	Front: 420/85R28 R1W (16.9R28 R1W) (FI, TR)		
75-W1380	7294886B3	Duals: 480/80R42 R1W (18.4R42 R1W) (FI, TR)		5,905.00
	7294765B1	Front: 380/85R30 R1W (FI, TR)		
75-W1596	7294863B3	Duals: 520/85R42 R1W (20.8R42 R1W) (GY, TR) . . .		9,075.00
	7294766B1	Front: 420/85R30 R1W (16.9R30 R1W) (GY, TR)		
75-W1399	7294863B3	Duals: 520/85R42 R1W (20.8R42 R1W) (GY, TR) . . .		9,268.00
	7294770B1	Front: 380/85R34 R1W (14.9R34 R1W) (GY, TR)		
75-W1627	7294864B3	Duals: 480/80R46 R1W (18.4R46 R1W) (GY, TR) . . .		8,540.00
	7294766B1	Front: 420/85R30 R1W (16.9R30 R1W) (GY, TR)		
75-W1414	7294864B3	Duals: 480/80R46 R1W (18.4R46 R1W) (FI, GY)		8,980.00
	7294767B1	Front: 420/90R30 R1W (FI, GY)		
75-W1401	7294864B3	Duals: 480/80R46 R1W (18.4R46 R1W) (FI, GY, TR) .		8,733.00
	7294770B1	Front: 380/85R34 R1W (14.9R34 R1W) (FI, GY, TR)		
75-W1745	7294866B3	Duals: 380/90R50 R1W (14.9R50 R1W) (FI, GY)		8,018.00
	7294770B1	Front: 380/85R34 R1W (14.9R34 R1W) (FI, GY)		
75-W1404	7294868B3	Duals: 320/90R54 R1W (GY)		9,302.00
	7294773B1	Front: 320/85R38 R1W (GY)		

SUBJECT TO AVAILABILITY

(F.O.B. PORT OF ENTRY)

Order Code	Catalog Number	Description	Approx. Weight (lb.)	List Price

TIRES for 7624 with Dyna-VT Transmission

TIRE BRAND SELECTION

70-Blank	7294212	Factory Brand Choice	No Charge
70-T0002	7294196	Goodyear Brand Required	1,158.00
70-T0007	7294197	Firestone Brand Required	1,158.00
70-T0010	7294198	Trelleborg Brand Required	1,158.00

FRONT AND REAR TIRES

Rear: Single Welded Pressed Steel - Set of 2
Front: Fixed Welded Steel Rim

75-W1585	7294857B2 7294793	Rear: 710/70R38 R1W (FI, GY, TR) Front: 600/65R28 R1W (FI, GY, TR)	3,135.00
75-W1716	7294858B2 7294793	Rear: 620/70R42 R1W (GY, TR) Front: 600/65R28 R1W (GY, TR)	2,544.00

Rear: Single Semi Dished Cast Centers- Set of 2
Front: Waffle Wheel

75-Base	7294871B2 7294767	Rear: 480/80R46 R1W (18.4R46 R1W) (FI, TR) Front: 420/90R30 R1W (FI, TR)	**In Base**
75-W1384	7294882B2 7294762	Rear: 480/80R42 R1W (18.4R42 R1W) (FI) Front: 420/85R28 (16.9R28 R1W) R1W (FI)	(1,004.00)
75-W1377	7294882B2 7294765	Rear: 480/80R42 R1W (18.4R42 R1W) (FI) Front: 380/85R30 (14.9R30) R1W (FI)	(1,625.00)
75-W1485	7294870B2 7294766	Rear: 520/85R42 R1W (20.8R42 R1W) (GY, TR) Front: 420/85R30 R1W (16.9R30 R1W) (GY, TR)	(129.00)
75-W1398	7294870B2 7294770	Rear: 520/85R42 R1W (20.8R42 R1W) (GY, TR) Front: 380/85R34 (14.9R34) R1W (GY, TR)	64.00
75-W1626	7294871B2 7294766	Rear: 480/80R46 R1W (18.4R46 R1W) (GY, TR) Front: 420/85R30 (16.9R30) R1W (GY, TR)	(440.00)
75-W1349	7294871B2 7294770	Rear: 480/80R46 R1W (18.4R46 R1W) (FI, GY, TR) Front: 380/85R34 (14.9R34) R1W (FI, GY, TR)	(247.00)
75-W1802	7294911B2 7294770	Rear: 380/90R50 R1W (FI, GY) Front: 380/85R34 R1W (FI, GY)	501.00

SUBJECT TO AVAILABILITY

(F.O.B. PORT OF ENTRY)

Order Code	Catalog Number	Description	Approx. Weight (lb.)	List Price

TIRES for 7624 with Dyna-VT Transmission

FRONT AND REAR TIRES - CONTINUED

Rear: Dual Cast Inner / Steel Outer - Set of 4
Front: Waffle Wheel

75-W1386	7294886B2	Duals: 480/80R42 R1W (18.4R42 R1W) (FI, TR)		5,522.00
	7294762	Front: 420/85R28 R1W (16.9R28 R1W) (FI, TR)		
75-W1380	7294886B2	Duals: 480/80R42 R1W (18.4R42 R1W) (FI, TR)		4,901.00
	7294765	Front: 380/85R30 R1W (FI, TR)		
75-W1596	7294863B2	Duals: 520/85R42 R1W (20.8R42 R1W) (GY, TR) . . .		8,071.00
	7294766	Front: 420/85R30 R1W (16.9R30 R1W) (GY, TR)		
75-W1399	7294863B2	Duals: 520/85R42 R1W (20.8R42 R1W) (GY, TR) . . .		8,264.00
	7294770	Front: 380/85R34 R1W (14.9R34 R1W) (GY, TR)		
75-W1627	7294864B2	Duals: 480/80R46 R1W (18.4R46 R1W) (GY, TR) . . .		7,535.00
	7294766	Front: 420/85R30 R1W (16.9R30 R1W) (GY, TR)		
75-W1414	7294864B2	Duals: 480/80R46 R1W (18.4R46 R1W) (FI, GY)		7,975.00
	7294767	Front: 420/90R30 R1W (FI, GY)		
75-W1401	7294864B2	Duals: 480/80R46 R1W (18.4R46 R1W) (FI, GY, TR) .		7,728.00
	7294770	Front: 380/85R34 R1W (14.9R34 R1W) (FI, GY, TR)		
75-W1745	7294866B2	Duals: 380/90R50 R1W (14.9R50 R1W) (FI, GY)		7,013.00
	7294770	Front: 380/85R34 R1W (14.9R34 R1W) (FI, GY)		
75-W1404	7294868B2	Duals: 320/90R54 R1W (GY)		8,895.00
	7294773	Front: 320/85R38 R1W (GY)		

SUBJECT TO AVAILABILITY

7600 LARGE FRAME PREMIUM EDITION

Mississippi State Contract Discount: 25%

MASSEY FERGUSON®

(F.O.B. PORT OF ENTRY)

Order Code	Catalog Number	Description	Approx. Weight (lb.)	List Price
PTO				
100-LA045	Base	540/540E/1000 Speed PTO with in Cab Controls . . . . Two separate shafts, one 6 spline, and one 21 spline		**In Base**
100-LA100	7293536	540E/1000E/1000 Speed PTO with in Cab Controls . . (**Only Available on Dyna-6 Transmissions)**		250.00
FRONT HITCH				
230-FA000	Base	Less Front Hitch		**In Base**
230-F1120	7293366	4000 KG Front Linkage w/1 Set of Hydraulic Couplers .		7,042.00
230-F1121	7293368	4000 KG Front Linkage w/ 2 sets of Hydraulic Couplers		8,076.00
230-F1129	7293565	4000 KG Front Linkage with . . . . . 1 set of Hydraulic Couplers with Pressure Drain		7,189.00
LOADER PROVISION				
350-LL000	Base	Less Loader Provisions . . . . . (**Requires In Base Power Beyond)**		**In Base**
350-LL004*	7293484	Front Loader Provisions including Hydraulics, ... Subframe. (**Requires: Valves 1 and 2 Electric with a Joystick (KX012) & Less Power Beyond- GR000 & 29 GPM (110 L/min) Closed Center Load Sensing (DP110))**		5,853.00

TO EQUIP A TRACTOR WITH THE 39 GPM (150 L/MIN) HYDRAULIC PUMP (DP150) AND LOADER, THE LOADER WILL NEED TO BE PLACED ON A SEPARATE ORDER AND FIELD INSTALLED. CONTACT DEALER CENTRAL FOR INSTRUCTIONS.

TO UTILIZE THE FACTORY INSTALLED MULTIFUNCTION JOYSTICK WITH A LOADER, THE TRACTOR MUST BE EQUIPPED WITH THE LOADER PROVISIONS FROM THE FACTORY.

CAB				
365-AF009	7294249	Radio, AM/FM, MP3 Compatible		(242.00)
125-AE042	7293546	Superluxe Grammar Seat		1,722.00
280-GZ001	7293129	Park Lock, Electronic Activated Park . . . . . Brake Mounted on Shuttle Lever		2,621.00

SUBJECT TO AVAILABILITY

7600 LARGE FRAME PREMIUM EDITION

Mississippi State Contract Discount: 25%

(F.O.B. PORT OF ENTRY)

Order Code	Catalog Number	Description	Approx. Weight (lb.)	List Price
FRONT WEIGHTS				
285-YA112	7293487	121 LBS (55 KGS) Front Weights, Set of 12 . . . . . with Hardware - total Weight 1,455 LBS (660 KGS)		2,228.00
REAR WHEEL WEIGHTS				
325-RD040	7294192	551 LBS (250 KGS) Weights, Set of 2 . . . . . Mounts Externally to Wheel	1102	1,791.00
325-RD041	7294200	551 LBS (250 KGS) Weights, Set of 4 . . . . . Mounts Externally to Wheel	2204	3,582.00
BELLY AND HITCH WEIGHTS				
245-YD001	7293374	1 Belly Weight - 584 LBS (265 KGS) . . . . . (For use **WITHOUT** Front 3-Point Hitch)	584	1,447.00
245-YD001	7293375	1 Belly Weight - 430 LBS (195 KGS) . . . . . (For use **WITH** Front 3-Point Hitch)	430	1,064.00
345-YB003	7294119	1873 LBS (850 KGS) 3-Point HITCH Weight . . . . . (For use with Front 3-Point Hitch or Rear 3-Point Hitch without Quick Hitch)	1984	3,307.00
345-YB004	7294120	1873 LBS (850 KGS) plus 1323 LBS (600 KGS) . . . . 3-Point Linkage Weight (total of 1500 KGS in weight) (For use with Front 3-Point Hitch or Rear 3-Point Hitch without Quick Hitch)	3307	5,512.00
ELECTRICAL				
215-CB002	7293087	Engine Block Heater - 110 Volt	146.00	
265-EF005	7293363	Drilled Engine Siderails (Additional Mounting Points) . . (Not Compatible with Loader Applications)		989.00
LIGHTING				
205-VF013	7293103	Dual Roof-Mounted Rotating Beacons, Left and Right . (Includes SAE SMV sign)		502.00
195-VG078	7295103	2 Xenon and 2 Single Bulb Front Worklights, ... 2 Xenon Rear Worklights		3,293.00

SUBJECT TO AVAILABILITY

7600 LARGE FRAME PREMIUM EDITION

Mississippi State Contract Discount: 25%

MASSEY FERGUSON®

(F.O.B. PORT OF ENTRY)

Order Code	Catalog Number	Description	Approx. Weight (lb.)	List Price
PIVOTING FRONT FENDERS				
155-WE110	Base	Pivoting Front Fenders - Standard Width . . . . . Width depends on tire selection; see Chart Below		**In Base**
155-WE111	7293598	Pivoting Front Fenders - Wide Width . . . . . Width depends on tire selection; see Chart Below		116.00

Fender Size		
Standard	**Wide**	**Tire Sizes**
320 mm	355 mm	320/85R34 (12.4R34) 320/85R38 (12.4R38)
380 mm	410 mm	380/85R30 (14.9R30) 380/85R34 (14.9R34) 400/80R28
410 mm	470 mm	420/85R28 (16.9R28) 420/85R30 (16.9R30) 420/90R30
470 mm	520 mm	480/70R30
520 mm	620 mm	540/65R28 540/65R30
620 mm	700 mm	600/65R2 710/55R30

REAR FENDERS				
255-WD012	Base	Rear Fenders without Extensions, 78.74"(2.00 M) . . .		**In Base**
255-WD017	7293107*	Wide Fender -90.55" (2.3 M) with Rear Extension . . .		1,272.00
255-WD020	7293109*	Extra Wide Fender -100.4" (2.55 M) . . . . . with Rear Extension		1,421.00

*** Not Compatible with Category 3 Fixed Ball End Links with Category 3/3N Quick Hitch, In Base Option**

SUBJECT TO AVAILABILITY

7600 LARGE FRAME PREMIUM EDITION

Mississippi State Contract Discount: 25%

(F.O.B. PORT OF ENTRY)

Order Code	Catalog Number	Description	Approx. Weight (lb.)	List Price
MISCELLANEOUS				
35-EN001	7293092	Creeper Gear (4:1 Reduction) (**Available on Dyna-6 Editions Only)**		2,297.00
250-GS001	7293100	Hydraulic Trailer Brakes		785.00
250-GS062	7293551	Pneumatic Trailer Brakes		6,505.00
250-GS067	7293552	Pneumatic & Hydraulic		7,289.00
225-LQ001	7293553	Water Separator (Fuel Filter)		448.00
275-TC005	7294210	French Language OIB		No Charge
275-TC011	7294211	Spanish Language OIB		No Charge

DEALER INSTALLED OPTIONS

FRONT WEIGHTS

Beauvais Built

5020186M	8 x 55kg (121 lbs.) Front Weights	968	1,485.00
5020187M	10 x 55kg (121 lbs.) Front Weights	1210	1,857.00
5020188M	12 x 55kg (121 lbs.) Front Weights	1452	2,228.00
5020189M	14 x 55kg (121 lbs.) Front Weights	1694	2,600.00

◆Jackson Built

5020186JM	8 x 55kg (121 lbs.) Front Weights	968	1,485.00
5020187JM	10 x 55kg (121 lbs.) Front Weights	1210	1,857.00
5020188JM	12 x 55kg (121 lbs.) Front Weights	1452	2,228.00
5020189JM	14 x 55kg (121 lbs.) Front Weights	1694	2,600.00
5020190JM	16 x 55 kg (121 lbs.) Front Weights	1936	2,971.00

SUBJECT TO AVAILABILITY

MASSEY FERGUSON®

MF7700 SERIES

MASSEY FERGUSON®

7719 / 7720 / 7722 / 7724 / 7726 SERIES

HIGH HORSEPOWER

RESERVED PAGE

7700 LARGE FRAME CLASSIC EDITION

Mississippi State Contract Discount: 25%

MASSEY FERGUSON®

(F.O.B. PORT OF ENTRY)

CLASSIC EDITION FEATURES

ENGINE
7719 / 7720
AP66-4: AGCO POWER 6.6L (403 cu in.) 6 Cylinder, Tier 4f Compliant
- SCR Technology
- Air-to-Air Aftercooled, Common Rail Injection eWastegateTurbocharged

7722 / 7724 / 7726
AP74-4: AGCO POWER 7.4L (452 cu in.) 6 Cylinder, Tier 4f Compliant
- SCR Technology
- Air-to-Air Aftercooled, Common Rail Injection, Turbocharged

Electronic Engine Management (EEM) EPM (Engine Power Management) and 2 Engine RPM Pre-sets
Electronic Controlled Viscous Fan Drive
Dual Element Dry Type Air Cleaner
Vertical Exhaust at Right Front Cab Post
Cooling System: Antifreeze to Minus 30F (-34C)
Fuel Tank Capacity: 114 Gal (430)
DEF Tank Capacity: 11 Gal (40L)
Engine Block Heater (110V)

POWERTRAIN
Dyna-6 Transmission:
- 24F/24R Semi-Powershift, 4 Ranges with 6 Powershifts per Range

7719 / 7720 / 7722: Long Bar Rear Axle 112 in. (2847mm) Long, 3.74 in. (95mm) Diameter
7724 / 7726: Long Bar Rear Axle 118.2 in. (3002mm) Long, 4.33 in. (110mm) Diameter
Multi-Disc Wet Brakes
Power Differential Lock
Independent PTO:
Dyna-6: 540/1000 RPM, 540 with 6 Spline Shaft, 1000 RPM with 21 Spline Shaft, Flanged Shaft
Rear Fender Mounted PTO Shut-Off
Less SV1 & SV2 Settings

FRONT WHEEL ASSIST AXLE
Power Front Axle (PFA)
Shielded Center Drive Line with Electro-Hydraulic Control & Front Wheel Drive Differential Lock
55 Degree Steering Angle

HYDRAULICS
Closed Center Load Sensing 29 GPM (110 L/Min) Pump
2900 PSI (200 Bar) Maximum Pressure
3 Mechanical Valves – Lever Controlled on Right Hand Console
Hydrostatic Power Steering

HITCH
3 Point Hitch: Category 3 Linkage Ball Ends with Quick Hitch
- Active Transport Control
- Lower Link Sensing
- Electronic Draft Control, Electronic Height Control and Rate of Drop
- Rub Block Stabilizers
- Left and Right Side External 3 Point Control

7719 / 7720 / 7722: Swinging Category II Drawbar w/ Clevis & Drop Pin
7724 / 7726: Swinging Category III Drawbar w/ Clevis & Drop Pin

ELECTRICAL SYSTEM
175 Amp Alternator
2 – 12V Batteries, 600 CCA Each (SAE)
7 Pin ASAE Rear Trailer Electrical Outlet
Electrical Isolator Switch and Jumpstart Point
Ignition with Neutral Start and Key Shutoff

LIGHTING
8 Front Hood Mounted Lights
Four Front Single Bulb Worklights
Two Rear Double Bulb Worklights
Taillights, Flashing Warning Lights and Turn Signals

INSTRUMENTS
Tachometer: Digital and Analog
PTO Speed: Digital
Ground Speed Display: Digital
Fuel Level, DEF Level, and Coolant Temp Gauges
Warning/Information Lights

OPERATOR AREA
Instructor Seat with Seat Belt
6 Post Cab
Transmission Control T-Handle on Right Hand Console
Adjustable Steering Column
Front Sun Visor
Air Conditioning and Heater
Air Suspended Seat - Automatic Adjustment
Front and Rear Windshield Wiper/Washer
Dual Large Telescoping Outside Rear View Mirrors
Single Inside Rear View Mirror
Radio with Antenna & Speakers (MP3 Compatible)
3 Pin 12V Power Outlets
12V Cigarette Lighter Style Power Outlet

WHEELS AND TIRES
7719 / 7720 / 7722
Rear: 480/80R42 R1W Single Semi-Dished Cast Center Wheels
Front: 420/85R28 R1W Single Waffle Wheels
7724 / 7726
Rear: 480/80R46 R1W Single Semi-Dished Cast Center Wheels
Front: 420/90R30 R1W Single Waffle Wheels

OTHER STANDARD FEATURES
Full AGCOMMAND Ready with Antenna, Bracket, and Harness (To Complete, See Technology Section)
Lockable Tool Box
SMV Sign
Molded Rear Fenders
English Literature

7700 LARGE FRAME CLASSIC EDITION

Mississippi State Contract Discount: 25%

(F.O.B. PORT OF ENTRY)

Order Code	Catalog Number	Description	Approx. Weight (lb.)	List Price

ONE *ORDER CODE* FROM EACH GROUP MUST BE SPECIFIED. (Unless In Base Option is desired)

BASE MACHINE

DYNA-6 EDITIONS-- Beauvais Built

MF7719~D6~ES~01	7295134	Massey 7719 Classic Tractor 145 PTO HP	152,175.00
MF7720~D6~ES~01	7295135	Massey 7720 Classic Tractor 155 PTO HP	158,381.00
MF7722~D6~ES~01	7295136	Massey 7722 Classic Tractor 165 PTO HP	167,691.00
MF7724~D6~ES~01	7295137	Massey 7724 Classic Tractor 180 PTO HP	178,365.00
MF7726~D6~ES~01	7295138	Massey 7726 Classic Tractor 200 PTO HP	187,403.00

TRANSMISSION OPTIONS

25-NA030	Base	6x4 Dyna-6 Transmission with 24F/24R gears . . . . 25 MPH (40 KPH) with Dynamic Tractor Management (DTM) Includes: Non-Suspended Power Front Axle	**In Base**
25-NA032	7295149	6x4 Dyna-6 Transmission with 24F/24R gears. . . . 25 MPH (40 KPH) with Dynamic Tractor Management (DTM) Includes: Suspended Power Front Axle and Power Assist Brakes	1,855.00
25-G1061	7295150	6X4 Dyna-6 Transmission with 24F/24R gears. . . . 31 MPH (50 KPH) with Dynamic Tractor Management (DTM) Includes: Suspended Power Front Axle and High Capacity Power Assist Brakes	2,250.00

AUXILIARY HYDRAULIC FLOW

370-DP110	Base	29 GPM (110 L/min) Closed Center Load Sensing . .	**In Base**
370-DP150	7293529	39 GPM (150 L/min) Closed Center Load Sensing. .	1,327.00

AUXILIARY VALVE 1 & 2

50-KX010	Base	2 Mechanical Controlled Valves, Located on Right Hand Console. 1st and 2nd - Flow Dividing, Kickout, Zero Leak, Float	**In Base**

AUXILIARY VALVE 3 & 4

55-MU003	Base	3rd Mechanical Valve Only, Located on Right Hand Console. Kickout, Zero Leak, Flow Dividing, Float	**In Base**
55-MU012	7293531	3rd and 4th Mechanically Controlled Valves, ... Located on Right Hand Console. Kickout, Zero Leak, Flow Dividing, Float	1,136.00

(F.O.B. PORT OF ENTRY)

Order Code	Catalog Number	Description	Approx. Weight (lb.)	List Price
POWER BEYOND				
90-GR000	Base	Less Power Beyond		**In Base**
90-GR010	7295153	Power Beyond Couplers P/T/LS/D		716.00
REAR AXLE				
FOR 7719 - 7722				
60-EE404	Base	Long Bar Rear Axle, 112 in. (2847mm) long 3.74 in. (95mm) diameter		**In Base**
60-EE402	7293527	Short Bar Rear Axle, 84.4 in. (2144mm) long 3.74 in. (95mm) diameter		(591.00)
FOR 7724 / 7726				
60-EE405	Base	Long Bar Rear Axle, 118.2 in. (3002mm) long 4.33 in. (110mm) diameter		**In Base**
60-EE403	7293528	Short Bar Rear Axle, 86.7 in. (2202mm) long 4.33 in. (110mm) diameter		(591.00)
REAR 3-POINT HITCH				
85-GC210	Base	Category 3 Fixed Ball End Links with Category 3/3N Quick Hitch		**In Base**
85-GC009	7293694	Category 3 Fixed Ball End Links		(1,307.00)
DRAWBAR				
FOR 7719 - 7722				
95-YM027	Base	Swinging Category II Drawbar w/ Clevis & Drop Pin		**In Base**
95-YM242	7293695	Swinging Category III Drawbar w/ Clevis & Drop Pin		867.00
FOR 7724 - 7726				
95-YM242	Base	Swinging Category III Drawbar w/ Clevis & Drop Pin		**In Base**
95-YM027	7293696	Swinging Category II Drawbar w/ Clevis & Drop Pin		(320.00)
INSTRUMENT PANEL / CONTROL CENTER DISPLAY (CCD)				
175-BA005	Base	Analog and Digital Instrument Panel w/o Radar or Slip Control. No Control Center Display (CCD).		**In Base**
175-BA003	7293084	Analog and Digital Instrument Panel with Radar (for Actual Ground Speed) and Slip Control. No Control Center Display (CCD).		808.00

(F.O.B. PORT OF ENTRY)

Order Code	Catalog Number	Description	Approx. Weight (lb.)	List Price

TIRES for 7719, 7720 and 7722

TIRE BRAND SELECTION

70-Blank	7294212	Factory Brand Choice		No Charge
70-T0001	7294195	Michelin Brand Required		1,552.00
70-T0007	7294197	Firestone Brand Required		1,158.00
70-T0010	7294198	Trelleborg Brand Required		1,158.00

FRONT AND REAR TIRES

Rear: Single Welded Pressed Steel - Set of 2
Front: Fixed Welded Steel Rim

75-W1585	7294857B3	Rear: 710/70R38 R1W (MI, TR)		4,139.00
	7294793B1	Front: 600/65R28 R1W (MI, TR)		
75-W1716	7294858B3	Rear: 620/70R42 R1W (MI, TR)		3,548.00
	7294793B1	Front: 600/65R28 R1W (MI, TR)		

Rear: Single Semi Dished Cast Centers- Set of 2
Front: Waffle Wheel

75-Base	7294882B3	Rear: 480/80R42 R1W (18.4R42 R1W) (MI, TR)		**In Base**
	7294762B1	Front: 420/85R28 R1W (16.9R28 R1W) (MI, TR)		
75-W1377	7294882B3	Rear: 480/80R42 R1W (18.4R42 R1W) (MI, TR)		(621.00)
	7294765B1	Front: 380/85R30 R1W (14.9R30 R1W) (MI, TR)		
75-W1485	7294870B3	Rear: 520/85R42 R1W (20.8R42 R1W) (MI, TR)		875.00
	7294766B1	Front: 420/85R30 R1W (16.9R30 R1W) (MI, TR)		
75-W1325	7294870B3	Rear: 520/85R42 R1W (20.8R42 R1W) (MI)		1,315.00
	7294767B1	Front: 420/90R30 R1W (MI)		
75-W1398	7294870B3	Rear: 520/85R42 R1W (20.8R42 R1W) (MI, TR)		1,068.00
	7294770B1	Front: 380/85R34 R1W (14.9R34 R1W) (MI, TR)		
75-W1626	7294871B3	Rear: 480/80R46 R1W (18.4R46 R1W) (MI, TR)		564.00
	7294766B1	Front: 420/85R30 R1W (16.9R30 R1W) (MI, TR)		
75-W1413	7294871B3	Rear: 480/80R46 R1W (18.4R46 R1W) (MI)		1,004.00
	7294767B1	Front: 420/90R30 R1W (MI)		
75-W1349	7294871B3	Rear: 480/80R46 R1W (18.4R46 R1W) (MI, TR)		757.00
	7294770B1	Front: 380/85R34 R1W (14.9R34 R1W) (MI, TR)		
75-W1802	7294911B3	Rear: 380/90R50 R1W (FI)		1,505.00
	7294770B1	Front: 380/85R34 R1W (14.9R34 R1W) (FI)		
75-W1354	7294875B3	Rear: 320/90R54 R1W (MI)		3,237.00
	7294773B1	Front: 320/85R38 R1W (MI)		

(F.O.B. PORT OF ENTRY)

TIRES for 7719, 7720 and 7722

FRONT AND REAR TIRES - CONTINUED

Order Code	Catalog Number	Description	Approx. Weight (lb.)	List Price
		Rear: Dual Cast Inner / Steel Outer - Set of 4		
		Front: Waffle Wheel		
75-W1386	7294886B3	Duals: 480/80R42 R1W (18.4R42 R1W) (MI, TR) . . .		6,526.00
	7294762B1	Front: 420/85R28 R1W (16.9R28 R1W) (MI, TR)		
75-W1380	7294886B3	Duals: 480/80R42 R1W (18.4R42 R1W) (MI, TR) . . .		5,905.00
	7294765B1	Front: 380/85R30 R1W (MI, TR)		
75-W1596	7294863B3	Duals: 520/85R42 R1W (20.8R42 R1W) (MI, TR) . . .		9,075.00
	7294766B1	Front: 420/85R30 R1W (16.9R30 R1W) (MI, TR)		
75-W1391	7294863B3	Duals: 520/85R42 R1W (20.8R42 R1W) (MI)		9,515.00
	7294767B1	Front: 420/90R30 R1W (MI)		
75-W1399	7294863B3	Duals: 520/85R42 R1W (20.8R42 R1W) (MI, TR) . . .		9,268.00
	7294770B1	Front: 380/85R34 R1W (14.9R34 R1W) (MI, TR)		
75-W1627	7294864B3	Duals: 480/80R46 R1W (18.4R46 R1W) (MI, TR) . . .		8,540.00
	7294766B1	Front: 420/85R30 R1W (16.9R30 R1W) (MI, TR)		
75-W1414	7294864B3	Duals: 480/80R46 R1W (18.4R46 R1W) (MI)		8,980.00
	7294767B1	Front: 420/90R30 R1W (MI)		
75-W1401	7294864B3	Duals: 480/80R46 R1W (18.4R46 R1W) (MI, TR) . . .		8,733.00
	7294770B1	Front: 380/85R34 R1W (14.9R34 R1W) (MI, TR)		
75-W1745	7294866B3	Duals: 380/90R50 R1W (14.9R50 R1W) (FI)		8,018.00
	7294770B1	Front: 380/85R34 R1W (14.9R34 R1W) (FI)		
75-W1404	7294868B3	Duals: 320/90R54 R1W (MI)		9,302.00
	7294773B1	Front: 320/85R38 R1W (MI)		
		Rear: Dual Cast Inner / Steel Outer - Set of 4		
		Front: Welded Wheel		
75-W1821	7294863B3	Duals: 520/85R42 R1W (20.8R42 R1W) (MI, TR) . . .		11,728.00
	7294793B1	Front: 600/65R28 R1W (MI, TR)		

(F.O.B. PORT OF ENTRY)

TIRES for 7724 and 7726

TIRE BRAND SELECTION

Order Code	Catalog Number	Description	Approx. Weight (lb.)	List Price
70-Blank	7294212	Factory Brand Choice		No Charge
70-T0001	7294195	Michelin Brand Required		1,552.00
70-T0007	7294197	Firestone Brand Required		1,158.00
70-T0010	7294198	Trelleborg Brand Required		1,158.00

FRONT AND REAR TIRES

Rear: Single Welded Pressed Steel - Set of 2
Front: Fixed Welded Steel Rim

Order Code	Catalog Number	Description	Approx. Weight (lb.)	List Price
75-W1585	7294857B2 7294793	Rear: 710/70R38 R1W (MI, TR) Front: 600/65R28 R1W (MI, TR)		3,135.00
75-W1716	7294858B2 7294793	Rear: 710/70R42 R1W (MI, TR) Front: 600/65R28 R1W (MI, TR)		2,544.00

Rear: Single Semi Dished Cast Centers- Set of 2
Front: Waffle Wheel

Order Code	Catalog Number	Description	Approx. Weight (lb.)	List Price
75-Base	7294871B2 7294767	Rear: 480/80R46 R1W (18.4R46 R1W) (MI) Front: 420/90R30 R1W (MI)		**In Base**
75-W1485	7294870B2 7294766	Rear: 520/85R42 R1W (20.8R42 R1W) (MI, TR) Front: 420/85R30 R1W (16.9R30 R1W) (MI, TR)		(129.00)
75-W1398	7294870B2 7294770	Rear: 520/85R42 R1W (20.8R42 R1W) (MI, TR) Front: 380/85R34 R1W (14.9R34 R1W) (MI, TR)		64.00
75-W1384	7294882B2 7294762	Rear: 480/80R42 R1W (18.4R42 R1W) (MI, TR) Front: 420/85R28 (16.9R28 R1W) R1W (MI, TR)		(1,004.00)
75-W1325	7294870B2 7294767	Rear: 520/85R42 R1W (20.8R42 R1W) (MI) Front: 420/90R30 R1W (MI)		311.00
75-W1377	7294882B2 7294765	Rear: 480/80R42 R1W (18.4R42 R1W) (MI, TR) Front: 380/85R30 (14.9R30) R1W (MI, TR)		(1,625.00)
75-W1626	7294871B2 7294766	Rear: 480/80R46 R1W (18.4R46 R1W) (MI, TR) Front: 420/85R30 (16.9R30) R1W (MI, TR)		(440.00)
75-W1349	7294871B2 7294770	Rear: 480/80R46 R1W (18.4R46 R1W) (MI, TR) Front: 380/85R34 (14.9R34) R1W (MI, TR)		(247.00)

(F.O.B. PORT OF ENTRY)

TIRES for 7724 and 7726

FRONT AND REAR TIRES - CONTINUED

Order Code	Catalog Number	Description	Approx. Weight (lb.)	List Price
		Rear: Dual Cast Inner / Steel Outer - Set of 4		
		Front: Waffle Wheel		
75-W1386	7294886B2	Duals: 480/80R42 R1W (18.4R42 R1W) (MI, TR) . . .		5,522.00
	7294762	Front: 420/85R28 R1W (16.9R28 R1W) (MI, TR)		
75-W1380	7294886B2	Duals: 480/80R42 R1W (18.4R42 R1W) (MI, TR) . . .		4,901.00
	7294765	Front: 380/85R30 R1W (MI, TR)		
75-W1596	7294863B2	Duals: 520/85R42 R1W (20.8R42 R1W) (MI, TR) . . .		8,071.00
	7294766	Front: 420/85R30 R1W (16.9R30 R1W) (MI, TR)		
75-W1391	7294863B2	Duals: 520/85R42 R1W (20.8R42 R1W) (MI)		8,511.00
	7294767	Front: 420/90R30 R1W (MI)		
75-W1399	7294863B2	Duals: 520/85R42 R1W (20.8R42 R1W) (MI, TR) . . .		8,264.00
	7294770	Front: 380/85R34 R1W (14.9R34 R1W) (MI, TR)		
75-W1627	7294864B2	Duals: 480/80R46 R1W (18.4R46 R1W) (MI, TR) . . .		7,535.00
	7294766	Front: 420/85R30 R1W (16.9R30 R1W) (MI, TR)		
75-W1414	7294864B2	Duals: 480/80R46 R1W (18.4R46 R1W) (MI)		7,975.00
	7294767	Front: 420/90R30 R1W (MI)		
75-W1401	7294864B2	Duals: 480/80R46 R1W (18.4R46 R1W) (MI, TR) . . .		7,728.00
	7294770	Front: 380/85R34 R1W (14.9R34 R1W) (MI, TR)		
75-W1404	7294868B2	Duals: 320/90R54 R1W (MI)		8,297.00
	7294773	Front: 320/85R38 R1W (MI)		
75-W1745	7294866B2	Duals: 380/90R50 R1W (14.9R50 R1W) (FI).		7,013.00
	7294770	Front: 380/85R34 R1W (14.9R34 R1W) (FI)		
		Rear: Dual Cast Inner / Steel Outer - Set of 4		
		Front: Welded Wheel		
75-W1821	7294863B2	Duals: 520/85R42 R1W (20.8R42 R1W) (MI, TR) . . .		10,724.00
	7294793	Front: 600/65R28 R1W (MI, TR)		

7700 LARGE FRAME CLASSIC EDITION

MASSEY FERGUSON®

Mississippi State Contract Discount: 25%

(F.O.B. PORT OF ENTRY)

Order Code	Catalog Number	Description	Approx. Weight (lb.)	List Price
PTO				
100-LA032	Base	2000 Engine RPM with 540/1000RPM flanged PTO, . . in Cab Control - 6/21 spline studs		**In Base**
100-LA045	7295154	2000 Engine RPM w/ 540/540e/1000RPM flanged PTO, in Cab Control - 6 & 21 spline studs		250.00
100-LA100	7295155	2000 Engine RPM w/ 540e/1000e/1000RPM flanged PTO, in Cab Control - 6 & 21 spline studs		335.00
FRONT HITCH				
230-FA000	Base	Less Front Hitch, Less Front Hydraulic Couplers		**In Base**
230-F1120*	7293366	8,818 lbs. (4000 kg.) Front Linkage Double Acting . . . Cylinders with 2 Sets of Front Hydraulic Couplers with Pressure Drain		7,042.00
230-F1145*	7295160	8,818 lbs. (4000 kg.) Front Linkage Double Acting . . . Cylinders with 1 Set of Hydraulic Couplers with Belly Weight		8,076.00
230-F1153*	7295161	8,818 lbs. (4000 kg.) Front Linkage Double Acting . . . Cylinders with 1 Set of Hydraulic Couplers with Front PTO (21 Spline Anti-Clockwise)		13,910.00
*Requires: Suspended Front Axle				
RADIO				
365-AF009	7294249	Radio with Antenna & Speakers (MP3 Compatible). . .		**In Base**
365-AF001	7295159	Antenna and Speakers		(602.00)
CAB				
115-AM015	Base	Standard Cab Isolation		**In Base**
115-AM084	7293559	Mechanical Cab Suspension		1,639.00
280-GZ001	7293129	Park Lock, Electronic Activated Park . . . . . Brake Mounted on Shuttle Lever		2,621.00
FRONT WEIGHTS				
285-YA000	Base	Front Weight Carrier		**In Base**
285-YA112	7293487	121 LBS (55 kgs.) Front Weights, Set of 12 . . . . . with Hardware - total Weight 1,455 lbs. (660 kgs.) Not compatible with Monoblock Weights (YB003 and YB004) or Front Hitch (F1120, F1145, or F1153)		2,228.00
REAR WHEEL WEIGHTS				
325-RD040	7294192	551 lbs. (250 kgs.) Weights, Set of 2 . . . . . Mounts Externally to Wheel	1102	1,791.00
325-RD041	7294200	551 lbs. (250 kgs.) Weights, Set of 4 . . . . . Mounts Externally to Wheel	2204	3,582.00
BELLY AND HITCH WEIGHTS				
245-YD001	7293374	1 Belly Weight - 584 lbs. (265 kgs.) . . . . . (For use **WITHOUT** Front 3-Point Hitch)	584	1,447.00
345-YB003*	7294270	1,875 lbs (850 kg) Monoblock Weight.		3,307.00
345-YB004*	7294271	3,307 lbs (1500 kg) Monoblock Weight		5,512.00
*Not Compatible with Front Weights				

7700 LARGE FRAME CLASSIC EDITION

Mississippi State Contract Discount: 25%

MASSEY FERGUSON®

(F.O.B. PORT OF ENTRY)

Order Code	Catalog Number	Description	Approx. Weight (lb.)	List Price
ELECTRICAL				
215-CB002	Base	Engine Block Heater - 110 Volt		**In Base**
215-CB000	7293593	Less Engine Block Heater		(207.00)
ALTERNATOR				
220-CE020	Base	175 AMP Alternator.		**In Base**
220-CE019	7293533	Twin 120 AMP Alternators.		380.00
LIGHTING				
205-VF013	7293103	Dual Roof-Mounted Rotating Beacons, Left and Right (Includes SAE SMV sign)		502.00
195-VG078	7295103	2 Xenon and 2 Single Bulb Front Worklights, 2 Xenon Rear Worklights		3,293.00
190-VK004	7293597	Worklights on Handrails and Rear Fenders		522.00
PIVOTING FRONT FENDERS				
155-WE110	Base	Pivoting Front Fenders - Standard Width Width depends on tire selection; see Chart Below		**In Base**
155-WE111	7293598	Pivoting Front Fenders - Wide Width Width depends on tire selection; see Chart Below		116.00

Fender Size		
Standard	**Wide**	**Tire Sizes**
12.6" (320 mm)	13.9" (355 mm)	320/85R34 (12.4R34) 320/85R38 (12.4R38)
14.9" (380 mm)	16.1" (410 mm)	380/85R30 (14.9R30) 380/85R34 (14.9R34) 400/80R28
16.1" (410 mm)	18.5" (470 mm)	420/85R28 (16.9R28) 420/85R30 (16.9R30) 420/90R30
18.5" (470 mm)	20.4" (520 mm)	480/70R30
20.4" (520 mm)	24.4" (620 mm)	540/65R28 540/65R30
24.4" (620 mm)	27.5" (700 mm)	600/65R28 710/55R30

REAR FENDERS				
255-WD012	Base	Rear Fenders without Extensions, 78.74" (2.00 M)		**In Base**
255-WD017	7293107	Wide Fender -90.55" (2.3 M) with Rear Extension		1,272.00
255-WD020	7293109	Extra Wide Fender -100.4" (2.55 M) with Rear Extension		1,421.00

7700 LARGE FRAME CLASSIC EDITION

MASSEY FERGUSON®

Mississippi State Contract Discount: 25%

(F.O.B. PORT OF ENTRY)

Order Code	Catalog Number	Description	Approx. Weight (lb.)	List Price
MISCELLANEOUS				
35-EN001	7293092	Creeper Gear (4:1 Reduction)		2,297.00
250-GS001	7293100	Hydraulic Trailer Brakes		785.00
250-GS067	7293552	Pneumatic & Hydraulic Trailer Brakes		7,289.00
225-LQ001	7293553	Water Separator (Fuel Filter)		448.00
275-TC005	7294210	French Language OIB		No Charge
275-TC011	7294211	Spanish Language OIB		No Charge

DEALER INSTALLED OPTIONS

FRONT WEIGHTS

BEAUVAIS BUILT

	5020186M	8 x 55 kg. (121 lbs.) Front Weights	968	1,485.00
	5020187M	10 x 55 kg. (121 lbs.) Front Weights	1210	1,857.00
	5020188M	12 x 55 kg. (121 lbs.) Front Weights	1452	2,228.00
	5020189M	14 x 55 kg. (121 lbs.) Front Weights	1694	2,600.00
	5020190M	16 x 55 kg. (121 lbs.) Front Weights		2,971.00

REAR WEIGHT PACKAGE

	5020202M	Additional Rear Wheel Weight Package - set of 2 x 250kg (550 lbs) 250kg Weight Adapter for 10 Bolt Hub (order weights separately)		TBA

RESERVED PAGE

7700 LARGE FRAME DELUXE EDITION

Mississippi State Contract Discount: 25%

(F.O.B. PORT OF ENTRY)

DELUXE EDITION FEATURES

ENGINE

7719 / 7720 Dyna-6, 7719 / 7720 Dyna-VT:
AP66-4: AGCO POWER 6.6L (402 cu in.) 6 Cylinder, Tier 4f Compliant

- SCR Technology
- Air-to-Air Aftercooled, Common Rail Injection, eWastegate Turbocharged

7722 / 7724 / 7726 Dyna-6, 7722 / 7724 / 7726Dyna-VT:
AP74-4: AGCO POWER 7.4L (452 cu in.) 6 Cylinder, Tier 4f Compliant

- SCR Technology
- Air-to-Air Aftercooled, Common Rail Injection, Turbocharged

Electronic Engine Management (EEM) with Dual ERPM Settings
Electronic Controlled Viscous Fan Drive
Dual Element Dry Type Air Cleaner
Vertical Exhaust at Right Front Cab Post
Cooling System: Antifreeze to Minus 30°F (-34°C)
Fuel Tank Capacity: 114 Gal (430)
DEF Tank Capacity: 11 Gal (40L)
Engine Block Heater (110V)

POWERTRAIN

Dyna-VT Transmission:

- Continuously Variable Transmission, 60 ft/h to 25 MPH (18.2 Meters/h to 40 KPH)
- Dynamic Tractor Management (DTM) with Two Programmable Cruise Speeds
- Long Bar Rear Axle 118.2 in. (3002mm) Long, 3.74 in. (95mm) Diameter

Dyna-6 Transmission:

- 24F/24R Semi-Powershift, 4 Ranges with 6 Powershifts per Range
- Dynamic Tractor Management (DTM) with Two Programmable Cruise Speeds

7719 / 7720 / 7722: Long Bar Rear Axle 112 in. (2847mm) Long, 3.74 in. (95mm) Diameter
7724 / 7726: Long Bar Rear Axle 118.2 in. (3002mm) Long, 4.33 in. (110mm) Diameter
Multi-Disc Wet Brakes
Power Differential Lock
Independent PTO
Dyna-VT: 540/540E/1000/1000E RPM Flanged Shaft, 540 with 6 Spline and 1000 with 21 Spline
Dyna-6: 540/540E/1000 RPM Flanged Shaft, 540 with 6 Spline and 1000 with 21 Spline
Rear Fender Mounted PTO Shut-Off
SV1 & SV2 Settings

FRONT WHEEL ASSIST AXLE

Power Front Axle (PFA)
Suspended Front Axle
Shielded Center Drive Line with Electro-Hydraulic Control & Front Wheel Drive Differential Lock
55 Degree Steering Angle
SpeedSteer

HYDRAULICS

Closed Center Load Sensing 29 gpm (110 L/Min) Pump
2900 PSI (200 Bar) Maximum Pressure
2 Electric Valves - Fingertip Controlled on Armrest, 2 Mechanical Valves – Lever Controlled on Right Hand Console
Hydrostatic Power Steering
Power Beyond
Fender Control Spool Valve Control

ELECTRICAL SYSTEM

2 – 120 Amp Alternators
2 – 12V Batteries, 600 CCA Each (SAE)
7 Pin ASAE Rear Trailer Electrical Outlet
Electrical Isolator Switch and Jumpstart Point
Ignition with Neutral Start and Key Shutoff

HITCH

3 Point Hitch: Category 3 Linkage Ball Ends with Quick Hitch

- Active Transport Control
- Lower Link Sensing
- Electronic Draft Control, Electronic Height Control and Rate of Drop
- Rub Block Stabilizers
- Left and Right Side External 3 Point Control

7719/7720/7722: Swinging Category II Drawbar w/ Clevis & Drop Pin
7724 / 7726: Swinging Category III Drawbar w/ Clevis & Drop Pin

LIGHTING

8 Front Hood Mounted Lights
Four Front Single Bulb Worklights
Two Rear Double Bulb Worklights
Two Field Lights on Hand Rails and Rear Fenders with Taillights, Flashing Warning Lights, and Turn Signals

INSTRUMENTS

Control Center Display (CCD)

- Video Input
- Electric Valve Control
- ISOBUS Compliant

Radar with Slip Control
Tachometer: Digital and Analog
PTO Speed: Digital
Ground Speed Display: Digital
Fuel Level, DEF Level, and Coolant Temp Gauges
Warning/Information Lights

OPERATOR AREA

Instructors Seat with Seat Belt
2 Electrical Sockets
Mechanical Cab Suspension
6 Post Cab
Transmission Control T-Handle on Armrest
Adjustable Steering Column
Front Sun Visor
Air Conditioning and Heater
Air Suspended Seat - Automatic Adjustment
Front and Rear Windshield Wiper/Washer
Dual Large Telescoping Outside Rear View Mirrors
Single Inside Rear View Mirror
CD Player, Bluetooth, Radio with Antenna & Speakers (MP3 Compatible)
3 Pin 12V Power Outlet
12V Cigarette Lighter Style Power Outlet
ISO 11783 9-Pin in Cab Connector
ISO 11786 7-Pin in Cab Connector

WHEELS AND TIRES

7719 / 7720 / 7722
Rear 480/80R42 R1W Single Semi-Dished Cast Center Wheels
Front 420/85R28 R1W Single Waffle Wheels
7724 / 7726
Rear 480/80R46 R1W Single Semi-Dished Cast Center Wheels
Front 420/90R30 R1W Single Waffle Wheels

OTHER STANDARD FEATURES

Auto-Steer Ready
Full AGCOMMAND Ready with Antenna, Bracket, and Harness (To Complete, See Technology Section)
Lockable Tool Box
SMV Sign
Molded Rear Fenders
English Literature

7700 LARGE FRAME DELUXE EDITION

Mississippi State Contract Discount: 25%

MASSEY FERGUSON®

(F.O.B. PORT OF ENTRY)

Order Code	Catalog Number	Description	Approx. Weight (lb.)	List Price

ONE *ORDER CODE* FROM EACH GROUP MUST BE SPECIFIED. (Unless In Base Option is desired)

BASE MACHINE

DYNA-6 EDITIONS-- Beauvais Built

MF7719~D6~EF~02	7295200	Massey 7719 Deluxe Tractor 145 PTO HP		174,755.00
MF7720~D6~EF~02	7295201	Massey 7720 Deluxe Tractor 155 PTO HP		180,962.00
MF7722~D6~EF~02	7295202	Massey 7722 Deluxe Tractor 165 PTO HP		190,271.00
MF7724~D6~EF~02	7295203	Massey 7724 Deluxe Tractor 180 PTO HP		200,945.00
MF7726~D6~EF~02	7295204	Massey 7726 Deluxe Tractor 200 PTO HP		209,984.00

DYNA-VT EDITIONS-- Jackson Built

MF7719~DV~EF~02	7295120	Massey 7719 Deluxe Tractor 145 PTO HP		186,560.00
MF7720~DV~EF~02	7295121	Massey 7720 Deluxe Tractor 155 PTO HP		192,767.00
MF7722~DV~EF~02	7295122	Massey 7722 Deluxe Tractor 165 PTO HP		202,077.00
MF7724~DV~EF~02	7295123	Massey 7724 Deluxe Tractor 180 PTO HP		212,751.00
MF7726~DV~EF~02	7295124	Massey 7726 Deluxe Tractor 200 PTO HP		221,789.00

***16 weeks out for changes on Jackson Built Models**

TRANSMISSION OPTIONS FOR DYNA-6 EDITIONS

25-EA655	Base	6x4 Dyna-6 Transmission with 24F/24R gears. . . . 25 MPH (40 KPH) with Dynamic Tractor Management (DTM) Includes: Non-Suspended Power Front Axle	**In Base**
25-NA030	7295151	6X4 Dyna-6 Transmission with 24F/24R gears . . . . 25 MPH (40 KPH) with Dynamic Tractor Management (DTM) Includes: Suspended Front Axle and Power Assist Brakes	1,855.00
25-G1063	7295152	6X4 Dyna-6 Transmission with 24F/24R gears. . . . 31 MPH (50 KPH) with Dynamic Tractor Management (DTM) Includes: Suspended Front Axle and High Capacity Power Assist Brakes	2,250.00

TRANSMISSION OPTIONS FOR DYNA-VT EDITIONS

25-EA621	Base	Dyna-VT Transmission - 31 MPH (50 KPH)	**In Base**
25-A7027	7293693	Dyna-VT Transmission - 25 MPH (40 KPH)	(752.00)

7700 LARGE FRAME DELUXE EDITION

MASSEY FERGUSON®

Mississippi State Contract Discount: 25%

(F.O.B. PORT OF ENTRY)

Order Code	Catalog Number	Description	Approx. Weight (lb.)	List Price
AUXILIARY HYDRAULIC FLOW				
DYNA-6				
370-DP110	Base	29 GPM (110 L/min) Closed Center Load Sensing . . .		**In Base**
370-DP150	7293529	39 GPM (150 L/min) Closed Center Load Sensing . . .		1,327.00
DYNA-VT				
370-DP110	Base	29 GPM (110 L/min) Closed Center Load Sensing . . .		**In Base**
370-DP190	7293697	50 GPM (190 L/min) Closed Center Load Sensing . . .		986.00
AUXILIARY VALVE 1 & 2				
50-KX011	Base	Valves 1 and 2 Electric, Fingertip Controlled Spool Valves Fingertips Located in Armrest		**In Base**
50-KX012	7293530	Valves 1 and 2 Electric, with Multifunction Joystick on the Armrest (Required when Choosing Factory Installed Loader Provisions (LL004))		No Charge
TO UTILIZE THE FACTORY INSTALLED MULTIFUNCTION JOYSTICK WITH A LOADER, THE TRACTOR MUST BE EQUIPPED WITH THE LOADER PROVISIONS FROM THE FACTORY.				
AUXILIARY VALVE 3 & 4				
55-MU012	Base	3rd and 4th Mechanically Controlled Valves, ... with levers located in Right Hand Console Kickout, Zero Leak, Flow Dividing, Float		**In Base**
55-MU031	7293676	3rd and 4th Electric, Fingertip Controlled Valves . . . . with Fingertips located on Right Hand Console		1,318.00
POWER BEYOND				
90-GR010	Base	Power Beyond Couplers P/T/LS/D		**In Base**
90-GR000	7293665	Less Power Beyond		(716.00)
REAR AXLE				
DYNA-6				
FOR 7719 - 7722				
60-EE404	Base	Long Bar Rear Axle, 112 in. (2847 mm) long . . . . . 3.74 in. (95 mm) diameter		**In Base**
60-EE402	7293527	Short Bar Rear Axle, 84.4 in. (2144 mm) long . . . . . 3.74 in. (95 mm) diameter		(591.00)
FOR 7724 / 7726				
60-EE405	Base	Long Bar Rear Axle, 118.2 in. (3002 mm) long . . . . . 4.33 in. (110 mm) diameter		**In Base**
60-EE403	7293528	Short Bar Rear Axle, 86.7 in. (2202 mm) long . . . . . 4.33 in. (110 mm) diameter		(591.00)
DYNA-VT				
60-EE404	Base	Long Bar Rear Axle, 118.2 in. (3002mm) long, ... 3.74 in. (95 mm) diameter		**In Base**
60-EE402	7293527	Short Bar Rear Axle, 97.2 in. (2469mm) long. . . . . 3.74 in. (95 mm) diameter		(591.00)

7700 LARGE FRAME DELUXE EDITION

Mississippi State Contract Discount: 25%

MASSEY FERGUSON®

(F.O.B. PORT OF ENTRY)

Order Code	Catalog Number	Description	Approx. Weight (lb.)	List Price
DRAWBAR				
FOR 7719 - 7722				
95-YM027	Base	Swinging Category II Drawbar w/ Clevis & Drop Pin . .		**In Base**
95-YM242	7293695	Swinging Category III Drawbar w/ Clevis & Drop Pin . .		867.00
FOR 7724 - 7726				
95-YM242	Base	Swinging Category III Drawbar w/ Clevis & Drop Pin . .		**In Base**
95-YM027	7293696	Swinging Category II Drawbar w/ Clevis & Drop Pin . .		(320.00)
REAR 3-POINT HITCH				
85-GC210	Base	Category 3 Fixed Ball End Links with Category 3/3N Quick Hitch		**In Base**
85-GC009	7293694	Category 3 Fixed Ball End Links		(1,307.00)
INSTRUMENT PANEL / CONTROL CENTER DISPLAY (CCD)				
LESS AUTO-STEERING READY				
175-BA003	7293556	Analog and Digital Instrument Panel with Radar (for . . Actual Ground Speed) and Slip Control. No Control Center Display (CCD).		(5,119.00)
175-BA005	7293557	Analog and Digital Instrument Panel w/o Radar or Slip . Control. No Control Center Display (CCD).		(5,927.00)
175-BA008	7293563	Analog and Digital Instrument Panel, Control Center . . Display (CCD) with Video Input, Electric Valve Control, Radar with Slip Control and ISOBUS.		(145.00)
AUTO-STEERING READY				
175-BA012	Base*	Analog and Digital Instrument Panel, Control Center . . Display (CCD) with Video Input, Electric Valve Control, Radar with Slip Control and ISOBUS. *Order Auto-Guide™ 3000 TopDock Separately* *See Technology Section*		**In Base**

Note: The Control Center Display (CCD) is required to utilize Auto-Guide™ 3000.

AUTO-STEERING COMPLETE				
175-BA021	7293677	Analog and Digital Instrument Panel, Control Center . . Display (CCD) with Video Input, Electric Valve Control, and ISOBUS. Radar with Slip Control. Auto-Guide™ 3000 Sub-Meter (WAAS and OmniStar VBS) Auto Steering System. (Requires SpeedSteer) Auto-Guide™ 3000 uses the Control Center Display (CCD).		6,035.00
SPEEDSTEER				
185-AD004	Base	SpeedSteer Option		**In Base**
185-AD002	7293558	Less SpeedSteer . . . . . (Not Available with In Base and BA021 Instrument Control Panel)		(900.00)

(F.O.B. PORT OF ENTRY)

Order Code	Catalog Number	Description	Approx. Weight (lb.)	List Price

TIRES for 7719, 7720 and 7722 with Dyna-6 Transmission

TIRE BRAND SELECTION

70-Blank	7294212	Factory Brand Choice		No Charge
70-T0001	7294195	Michelin Brand Required		1,552.00
70-T0007	7294197	Firestone Brand Required		1,158.00
70-T0010	7294198	Trelleborg Brand Required		1,158.00

FRONT AND REAR TIRES

Rear: Single Welded Pressed Steel - Set of 2
Front: Fixed Welded Steel Rim

75-W1585	7294857B3	Rear:	710/70R38 R1W (MI, TR)	4,139.00
	7294793B1	Front:	600/65R28 R1W (MI, TR)	
75-W1716	7294858B3	Rear:	620/70R42 R1W (MI, TR)	3,548.00
	7294793B1	Front:	600/65R28 R1W (MI, TR)	

Rear: Single Semi Dished Cast Centers- Set of 2
Front: Waffle Wheel

75-Base	7294882B3	Rear:	480/80R42 R1W (18.4R42 R1W) (MI, TR)	**In Base**
	7294762B1	Front:	420/85R28 R1W (16.9R28 R1W) (MI, TR)	
75-W1377	7294882B3	Rear:	480/80R42 R1W (18.4R42 R1W) (MI, TR)	(621.00)
	7294765B1	Front:	380/85R30 R1W (14.9R30 R1W) (MI, TR)	
75-W1485	7294870B3	Rear:	520/85R42 R1W (20.8R42 R1W) (MI, TR)	875.00
	7294766B1	Front:	420/85R30 R1W (16.9R30 R1W) (MI, TR)	
75-W1325	7294870B3	Rear:	520/85R42 R1W (20.8R42 R1W) (MI)	1,315.00
	7294767B1	Front:	420/90R30 R1W (MI)	
75-W1398	7294870B3	Rear:	520/85R42 R1W (20.8R42 R1W) (MI, TR)	1,068.00
	7294770B1	Front:	380/85R34 R1W (14.9R34 R1W) (MI, TR)	
75-W1626	7294871B3	Rear:	480/80R46 R1W (18.4R46 R1W) (MI, TR)	564.00
	7294766B1	Front:	420/85R30 R1W (16.9R30 R1W) (MI, TR)	
75-W1413	7294871B3	Rear:	480/80R46 R1W (18.4R46 R1W) (MI)	1,004.00
	7294767B1	Front:	420/90R30 R1W (MI)	
75-W1349	7294871B3	Rear:	480/80R46 R1W (18.4R46 R1W) (MI, TR)	757.00
	7294770B1	Front:	380/85R34 R1W (14.9R34 R1W) (MI, TR)	
75-W1802	7294911B3	Rear:	380/90R50 R1W (FI)	1,505.00
	7294770B1	Front:	380/85R34 R1W (14.9R34 R1W) FI	
75-W1354	7294875B3	Rear:	320/90R54 R1W (MI)	3,237.00
	7294773B1	Front:	320/85R38 R1W (MI)	

(F.O.B. PORT OF ENTRY)

TIRES for 7719, 7720 and 7722 with Dyna-6 Transmission

FRONT AND REAR TIRES - CONTINUED

Order Code	Catalog Number	Description	Approx. Weight (lb.)	List Price
		Rear: Dual Cast Inner / Steel Outer - Set of 4 ***Front: Waffle Wheel***		
75-W1386	7294886B3	Duals: 480/80R42 R1W (18.4R42 R1W) (MI, TR) . . .		6,526.00
	7294762B1	Front: 420/85R28 R1W (16.9R28 R1W) (MI, TR)		
75-W1380	7294886B3	Duals: 480/80R42 R1W (18.4R42 R1W) (MI, TR) . . .		5,905.00
	7294765B1	Front: 380/85R30 R1W (MI, TR)		
75-W1596	7294863B3	Duals: 520/85R42 R1W (20.8R42 R1W) (MI, TR) . . .		9,075.00
	7294766B1	Front: 420/85R30 R1W (16.9R30 R1W) (MI, TR)		
75-W1391	7294863B3	Duals: 520/85R42 R1W (20.8R42 R1W) (MI)		9,515.00
	7294767B1	Front: 420/90R30 R1W (MI)		
75-W1399	7294863B3	Duals: 520/85R42 R1W (20.8R42 R1W) (MI, TR) . . .		9,268.00
	7294770B1	Front: 380/85R34 R1W (14.9R34 R1W) (MI, TR)		
75-W1627	7294864B3	Duals: 480/80R46 R1W (18.4R46 R1W) (MI, TR) . . .		8,540.00
	7294766B1	Front: 420/85R30 R1W (16.9R30 R1W) (MI, TR)		
75-W1414	7294864B3	Duals: 480/80R46 R1W (18.4R46 R1W) (MI)		8,980.00
	7294767B1	Front: 420/90R30 R1W (MI)		
75-W1401	7294864B3	Duals: 480/80R46 R1W (18.4R46 R1W) (MI, TR) . . .		8,733.00
	7294770B1	Front: 380/85R34 R1W (14.9R34 R1W) (MI, TR)		
75-W1745	7294866B3	Duals: 380/90R50 R1W (14.9R50 R1W) (FI)		8,018.00
	7294770B1	Front: 380/85R34 R1W (14.9R34 R1W) (FI)		
75-W1404	7294868B3	Duals: 320/90R54 R1W (MI)		9,302.00
	7294773B1	Front: 320/85R38 R1W (MI)		
		Rear: Dual Cast Inner / Steel Outer - Set of 4 ***Front: Welded Wheel***		
75-W1821	7294863B3	Duals: 520/85R42 R1W (20.8R42 R1W) (MI, TR) . . .		11,728.00
	7294793B1	Front: 600/65R28 R1W (MI, TR)		

(F.O.B. PORT OF ENTRY)

Order Code	Catalog Number	Description	Approx. Weight (lb.)	List Price

TIRES for 7724 and 7726 with Dyna-6 Transmission

TIRE BRAND SELECTION

70-Blank	7294212	Factory Brand Choice	No Charge
70-T0001	7294195	Michelin Brand Required	1,552.00
70-T0007	7294197	Firestone Brand Required	1,158.00
70-T0010	7294198	Trelleborg Brand Required	1,158.00

FRONT AND REAR TIRES

Rear: Single Welded Pressed Steel - Set of 2
Front: Fixed Welded Steel Rim

75-W1585	7294857B2 7294793	Rear: 710/70R38 R1W (MI, TR) . . . . . . Front: 600/65R28 R1W (MI, TR)		3,135.00
75-W1716	7294858B2 7294793	Rear: 710/70R42 R1W (MI, TR) . . . . . . Front: 600/65R28 R1W (MI, TR)		2,,544.00

Rear: Single Semi Dished Cast Centers- Set of 2
Front: Waffle Wheel

75-Base	7294871B2 7294767	Rear: 480/80R46 R1W (18.4R46 R1W) (MI) . . . . . Front: 420/90R30 R1W (MI)		**In Base**
75-W1485	7294870B2 7294766	Rear: 520/85R42 R1W (20.8R42 R1W) (MI, TR) . . . Front: 420/85R30 R1W (16.9R30 R1W) (MI, TR)		(129.00)
75-W1398	7294870B2 7294770	Rear: 520/85R42 R1W (20.8R42 R1W) (MI, TR) . . . Front: 380/85R34 R1W (14.9R34 R1W) (MI, TR)		64.00
75-W1384	7294882B2 7294762	Rear: 480/80R42 R1W (18.4R42 R1W) (MI, TR) . . . Front: 420/85R28 (16.9R28 R1W) R1W (MI, TR)		(1,004.00)
75-W1325	7294870B2 7294767	Rear: 520/85R42 R1W (20.8R42 R1W) (MI) . . . . . Front: 420/90R30 R1W (MI)		311.00
75-W1377	7294882B2 7294765	Rear: 480/80R42 R1W (18.4R42 R1W) (MI, TR) . . . Front: 380/85R30 (14.9R30) R1W (MI, TR)		(1,625.00)
75-W1626	7294871B2 7294766	Rear: 480/80R46 R1W (18.4R46 R1W) (MI, TR) . . . Front: 420/85R30 (16.9R30) R1W (MI, TR)		(440.00)
75-W1349	7294871B2 7294770	Rear: 480/80R46 R1W (18.4R46 R1W) (MI, TR) . . . Front: 380/85R34 (14.9R34) R1W (MI, TR)		(247.00)

(F.O.B. PORT OF ENTRY)

TIRES for 7724 and 7726 with Dyna-6 Transmission

FRONT AND REAR TIRES - CONTINUED

Order Code	Catalog Number	Description	Approx. Weight (lb.)	List Price
		Rear: Dual Cast Inner / Steel Outer - Set of 4 ***Front: Waffle Wheel***		
75-W1386	7294886B2	Duals: 480/80R42 R1W (18.4R42 R1W) (MI, TR) . . .		5,522.00
	7294762	Front: 420/85R28 R1W (16.9R28 R1W) (MI, TR)		
75-W1380	7294886B2	Duals: 480/80R42 R1W (18.4R42 R1W) (MI, TR) . . .		4,901.00
	7294765	Front: 380/85R30 R1W (MI, TR)		
75-W1596	7294863B2	Duals: 520/85R42 R1W (20.8R42 R1W) (MI, TR) . . .		8,071.00
	7294766	Front: 420/85R30 R1W (16.9R30 R1W) (MI, TR)		
75-W1399	7294863B2	Duals: 520/85R42 R1W (20.8R42 R1W) (MI, TR) . . .		8,264.00
	7294770	Front: 380/85R34 R1W (14.9R34 R1W) (MI, TR)		
75-W1627	7294864B2	Duals: 480/80R46 R1W (18.4R46 R1W) (MI, TR) . . .		7,535.00
	7294766	Front: 420/85R30 R1W (16.9R30 R1W) (MI, TR)		
75-W1414	7294864B2	Duals: 480/80R46 R1W (18.4R46 R1W) (MI)		7,975.00
	7294767	Front: 420/90R30 R1W (MI)		
75-W1401	7294864B2	Duals: 480/80R46 R1W (18.4R46 R1W) (MI, TR) . . .		7,728.00
	7294770	Front: 380/85R34 R1W (14.9R34 R1W) (MI, TR)		
75-W1404	7294868B2	Duals: 320/90R54 R1W (MI)		8,297.00
	7294773	Front: 320/85R38 R1W (MI)		
75-W1745	7294866B2	Duals: 380/90R50 R1W (14.9R50 R1W) (FI).		7,013.00
	7294770	Front: 380/85R34 R1W (14.9R34 R1W) (FI)		
75-W1391	7294863B2	Duals: 520/85R42 R1W (20.8R42 R1W) (MI)		8,511.00
	7294767	Front: 420/90R30 R1W (MI)		
		Rear: Dual Cast Inner / Steel Outer - Set of 4 ***Front: Welded Wheel***		
75-W1821	7294863B2	Duals: 520/85R42 R1W (20.8R42 R1W) (MI, TR) . . .		10,724.00
	7294793	Front: 600/65R28 R1W (MI, TR)		

(F.O.B. PORT OF ENTRY)

TIRES for 7719, 7720 and 7722 with Dyna-VT Transmission

TIRE BRAND SELECTION

Order Code	Catalog Number	Description	Approx. Weight (lb.)	List Price
70-Blank	7294212	Factory Brand Choice		No Charge
70-T0001	7294195	Michelin Brand Required		1,552.00
70-T0002	7294196	Goodyear Brand Required		1,158.00
70-T0007	7294197	Firestone Brand Required		1,158.00
70-T0010	7294198	Trelleborg Brand Required		1,158.00

FRONT AND REAR TIRES*

***11 weeks out for changes on Jackson Built Models**

Rear: Single Welded Pressed Steel - Set of 2
Front: Fixed Welded Steel Rim

75-W1585	7294857B3	Rear: 710/70R38 R1W (MI, FI, GY, TR)		4,139.00
	7294793B1	Front: 600/65R28 R1W (MI, FI, GY, TR)		
75-W1716	7294858B3	Rear: 620/70R42 R1W (MI, FI, GY, TR)		3,548.00
	7294793B1	Front: 600/65R28 R1W (MI, FI, GY, TR)		

Rear: Single Semi Dished Cast Centers- Set of 2
Front: Waffle Wheel

75-Base	7294882B3	Rear: 480/80R42 R1W (18.4R42 R1W) (MI, FI, TR)		**In Base**
	7294762B1	Front: 420/85R28 R1W (16.9R28 R1W) (MI, FI, TR)		
75-W1377	7294882B3	Rear: 480/80R42 R1W (18.4R42 R1W) (MI, FI, TR)		(621.00)
	7294765B1	Front: 380/85R30 R1W (MI, FI, TR)		
75-W1485	7294870B3	Rear: 520/85R42 R1W (20.8R42 R1W) (MI, GY, TR)		875.00
	7294766B1	Front: 420/85R30 R1W (16.9R30 R1W) (MI, GY, TR)		
75-W1325	7294870B3	Rear: 520/85R42 R1W (20.8R42 R1W) (MI, FI, GY)		1,315.00
	7294767B1	Front: 420/90R30 R1W (MI, FI, GY)		
75-W1398	7294870B3	Rear: 520/85R42 R1W (20.8R42 R1W) (MI, GY, TR)		1,068.00
	7294770B1	Front: 380/85R34 R1W (14.9R34 R1W) (MI, GY, TR)		
75-W1626	7294871B3	Rear: 480/80R46 R1W (18.4R46 R1W) (MI, GY, TR)		564.00
	7294766B1	Front: 420/85R30 R1W (16.9R30 R1W) (MI, GY, TR)		
75-W1413	7294871B3	Rear: 480/80R46 R1W (18.4R46 R1W) (MI, FI, GY)		1,004.00
	7294767B1	Front: 420/90R30 R1W (MI, FI, GY)		
75-W1349	7294871B3	Rear: 480/80R46 R1W(18.4R46 R1W)(MI,FI,GY,TR)		757.00
	7294770B1	Front: 380/85R34 R1W (14.9R34 R1W) (MI, FI, GY, TR)		
75-W1862	7294921B3	Rear: VF480/80R46 (MI)		TBA
	7294924B1	Front: VF380/85R34 (MI)		
75-W1802	7294911B3	Rear: 380/90R50 R1W (FI,GY)		1,505.00
	7294770B1	Front: 380/85R34 R1W (14.9R34 R1W) (FI, GY)		
75-W1354	7294875B3	Rear: 320/90R54 R1W (MI, FI,GY)		3,237.00
	7294773B1	Front: 320/85R38 R1W (MI, FI, GY)		

(F.O.B. PORT OF ENTRY)

TIRES for 7719, 7720 and 7722 with Dyna-VT Transmission

FRONT AND REAR TIRES - CONTINUED*

***11 weeks out for changes on Jackson Built Models**

Rear: Dual Cast Inner / Steel Outer - Set of 4
Front: Waffle Wheel

Order Code	Catalog Number	Description	Approx. Weight (lb.)	List Price
75-W1386	7294886B3 7294762B1	Duals: 480/80R42 R1W (18.4R42 R1W) (MI, FI, TR) Front: 420/85R28 R1W (16.9R28 R1W) (MI, FI, TR)		6,526.00
75-W1380	7294886B3 7294765B1	Duals: 480/80R42 R1W (18.4R42 R1W) (MI, FI, TR) Front: 380/85R30 R1W (MI, FI, TR)		5,905.00
75-W1596	7294863B3 7294766B1	Duals: 520/85R42 R1W (20.8R42 R1W) (MI, GY, TR) Front: 420/85R30 R1W (16.9R30 R1W) (MI, GY, TR)		9,075.00
75-W1391	7294863B3 7294767B1	Duals: 520/85R42 R1W (20.8R42 R1W) (MI, FI, GY) Front: 420/90R30 R1W (MI, FI, GY)		9,515.00
75-W1399	7294863B3 7294770B1	Duals: 520/85R42 R1W (20.8R42 R1W) (MI, GY, TR) Front: 380/85R34 R1W (14.9R34 R1W) (MI, GY, TR)		9,268.00
75-W1627	7294864B3 7294766B1	Duals: 480/80R46 R1W (18.4R46 R1W) (MI, GY, TR) Front: 420/85R30 R1W (16.9R30 R1W) (MI, GY, TR)		8,540.00
75-W1414	7294864B3 7294767B1	Duals: 480/80R46 R1W (18.4R46 R1W) (MI, FI, GY) Front: 420/90R30 R1W (MI, FI, GY)		8,980.00
75-W1401	7294864B3 7294770B1	Duals: 480/80R46 R1W (18.4R46 R1W) (MI,FI,GY,TR) Front: 380/85R34 R1W (14.9R34 R1W) (MI, FI, GY, TR)		8,733.00
75-W1864	7294919B3 7294924B1	Duals: VF480/80R46 R1W (MI) Front: VF380/85R34 R1W (MI)		TBA
75-W1745	7294866B3 7294770B1	Duals: 380/90R50 R1W (14.9R50 R1W) (FI, GY) Front: 380/85R34 R1W (14.9R34 R1W) (FI, GY)		8,018.00
75-W1404	7294868B3 7294773B1	Duals: 320/90R54 R1W (MI, FI, GY) Front: 320/85R38 R1W (MI, FI, GY)		9,302.00

Rear: Dual Cast Inner / Steel Outer - Set of 4
Front: Welded Wheel

75-W1821	7294863B3 7294793B1	Duals: 520/85R42 R1W (20.8R42 R1W)(MI,FI,GY,TR) Front: 600/65R28 R1W (MI, FI, GY, TR)		11,728.00

(F.O.B. PORT OF ENTRY)

Order Code	Catalog Number	Description	Approx. Weight (lb.)	List Price

TIRES for 7724 and 7726 with Dyna-VT Transmission

TIRE BRAND SELECTION

70-Blank	7294212	Factory Brand Choice	No Charge
70-T0001	7294195	Michelin Brand Required	1,552.00
70-T0002	7294196	Goodyear Brand Required	1,158.00
70-T0007	7294197	Firestone Brand Required	1,158.00
70-T0010	7294198	Trelleborg Brand Required	1,158.00

FRONT AND REAR TIRES

***11 weeks out for changes on Jackson Built Models**

Rear: Single Welded Pressed Steel - Set of 2
Front: Fixed Welded Steel Rim

75-W1585	7294857B2 7294793	Rear: Front:	710/70R38 R1W (MI, FI, GY, TR) . . . . . . 600/65R28 R1W (MI, FI, GY, TR)	3,135.00
75-W1716	7294858B2 7294793	Rear: Front:	710/70R42 R1W (MI, FI, GY, TR) . . . . . . 600/65R28 R1W (MI, FI, GY, TR)	2,544.00

Rear: Single Semi Dished Cast Centers- Set of 2
Front: Waffle Wheel

75-Base	7294871B2 7294767	Rear: Front:	480/80R46 R1W (18.4R46 R1W) (MI, FI, GY) . 420/90R30 R1W (MI, FI, GY)	**In Base**
75-W1384	7294882B2 7294762	Rear: Front:	480/80R42 R1W (18.4R42 R1W) (MI, FI, TR) . 420/85R28 (16.9R28 R1W) R1W (MI, FI, TR)	(1,004.00)
75-W1377	7294882B2 7294765	Rear: Front:	480/80R42 R1W (18.4R42 R1W) (MI, FI, TR) . 380/85R30 (14.9R30) R1W (MI, FI, TR)	(1,625.00)
75-W1485	7294870B2 7294766	Rear: Front:	520/85R42 R1W (20.8R42 R1W) (MI, GY, TR). 420/85R30 R1W (16.9R30 R1W) (MI, GY, TR)	(129.00)
75-W1325	7294870B2 7294767	Rear: Front:	520/85R42 R1W (20.8R42 R1W) (MI, FI, GY) . 420/90R30 R1W (MI, FI, GY)	311.00
75-W1398	7294870B2 7294770	Rear: Front:	520/85R42 R1W (20.8R42 R1W) (MI, GY, TR). 380/85R34 (14.9R34) R1W (MI, GY, TR)	64.00
75-W1626	7294871B2 7294766	Rear: Front:	480/80R46 R1W (18.4R46 R1W) (MI, GY, TR). 420/85R30 (16.9R30) R1W (MI, GY, TR)	(440.00)
75-W1349	7294871B2 7294770	Rear: Front:	480/80R46 R1W (18.4R46 R1W) (MI,FI,GY,TR) 380/85R34 (14.9R34) R1W (MI, FI, GY, TR)	(247.00)
75-W1862	7294921B2 7294924	Rear: Front:	VF480/80R46 (MI) . . . . . . VF380/85R34 (MI)	TBA

(F.O.B. PORT OF ENTRY)

TIRES for 7724 and 7726 with Dyna-VT Transmission

FRONT AND REAR TIRES - CONTINUED

***11 weeks out for changes on Jackson Built Models**

Order Code	Catalog Number	Description	Approx. Weight (lb.)	List Price
		Rear: Dual Cast Inner / Steel Outer - Set of 4		
		Front: Waffle Wheel		
75-W1386	7294886B2	Duals: 480/80R42 R1W (18.4R42 R1W) (MI, FI, TR) .		5,522.00
	7294762	Front: 420/85R28 R1W (16.9R28 R1W) (MI, FI, TR)		
75-W1380	7294886B2	Duals: 480/80R42 R1W (18.4R42 R1W) (MI, FI, TR) .		4,901.00
	7294765	Front: 380/85R30 R1W (MI, FI, TR)		
75-W1596	7294863B2	Duals: 520/85R42 R1W (20.8R42 R1W) (MI, GY, TR)		8,071.00
	7294766	Front: 420/85R30 R1W (16.9R30 R1W) (MI, GY, TR)		
75-W1391	7294863B2	Duals: 520/85R42 R1W (20.8R42 R1W) (MI, FI, GY) .		8,511.00
	7294767	Front: 420/90R30 R1W (MI, FI, GY)		
75-W1399	7294863B2	Duals: 520/85R42 R1W (20.8R42 R1W) (MI, GY, TR)		8,264.00
	7294770	Front: 380/85R34 R1W (14.9R34 R1W) (MI, GY, TR)		
75-W1627	7294864B2	Duals: 480/80R46 R1W (18.4R46 R1W) (MI, GY, TR).		7,535.00
	7294766	Front: 42085R30 R1W (16.9R30 R1W) (MI, GY, TR)		
75-W1414	7294864B2	Duals: 480/80R46 R1W (18.4R46 R1W) (MI, FI, GY) .		7,975.00
	7294767	Front: 420/90R30 R1W (MI, FI, GY)		
75-W1401	7294864B2	Duals: 480/80R46 R1W (18.4R46 R1W) (MI,FI,GY,TR)		7,728.00
	7294770	Front: 380/85R34 R1W (14.9R34 R1W) (MI, FI, GY, TR)		
75-W1864	7294919B2	Duals: VF480/80R46 R1W (MI)		TBA
	7294924	Front: VF380/85R34 R1W (MI)		
75-W1745	7294866B2	Duals: 380/90R50 R1W (14.9R50 R1W) (FI, GY) . . .		7,013.00
	7294770	Front: 380/85R34 R1W (14.9R34 R1W) (FI, GY)		
75-W1404	7294868B2	Duals: 320/90R54 R1W (MI, FI, GY)		8,297.00
	7294773	Front: 320/85R38 R1W (MI, FI, GY)		
		Rear: Dual Cast Inner / Steel Outer - Set of 4		
		Front: Welded Wheel		
75-W1821	7294863B2	Duals: 520/85R42 R1W (20.8R42 R1W) (MI,FI,GY,TR)		10,724.00
	7294793	Front: 600/65R28 R1W (MI, FI, GY, TR)		

7700 LARGE FRAME DELUXE EDITION

Mississippi State Contract Discount: 25%

(F.O.B. PORT OF ENTRY)

Order Code	Catalog Number	Description	Approx. Weight (lb.)	List Price
PTO				
DYNA-6 ONLY				
100-LA045	Base	2000 Engine RPM with 540/540e/1000RPM flanged PTO in Cab Control - 6 & 21 spline studs		**In Base**
100-LA100	7295156	2000 Engine RPM w/ 540e/1000e/1000RPM . . . . . flanged PTO in Cab Control - 6 & 21 spline studs		250.00
FRONT HITCH				
230-FA000	Base	Less Front Hitch		**In Base**
230-F1150*	7295131	8,818 lbs. (4000 kg.) Front Linkage, Double Acting . . Cylinder with 2 Sets of Hydraulic Couplers with Pressure Drain		5,865.00
230-F1151*	7295132	8,818 lbs. (4000 kg.) Front Linkage, Double Acting . . . Cylinder with 2 Sets of Hydraulic Couplers with Pressure Drain and Belly Weight		6,736.00
230-F1152*	7295133	8,818 lbs. (4000 kg.) Front Linkage, Double Acting . . Cylinder with 2 Sets of Hydraulic Couplers with Pressure Drain and Front PTO (21 Spline Anti-Clockwise)		15,100.00

*Requires: Suspended Front Axle and is Not Compatible with Creeper

LOADER PROVISION				
350-LL000	Base	Less Loader Provisions.		**In Base**
350-LL004*	7293484	Front Loader Provisions including Hydraulics, ... Subframe. **Requires: Valves 1 and 2 Electric with a Joystick (KX012) Not Compatible with Creeper**		5,853.00
RADIO				
DYNA-6				
365-AF011	Base	CD Player, Bluetooth, Radio with Antenna & . . . . . Speakers (MP3 Compatible)		**In Base**
365-AF009	7294249	Radio with Antenna & Speakers (MP3 Compatible). . .		(110.00)
365-AF001	7295157	Antenna and Speakers		(195.00)
DYNA-VT				
	5020425JM	CD Player, Bluetooth, Radio with Antenna & . . . . . Speakers (MP3 Compatible)		**In Base**
	5020428JM	Radio with Antenna and Speakers (MP3 Compatible) .		(110.00)
	5020424JM	Antenna and Speakers		(195.00)

7700 LARGE FRAME DELUXE EDITION

Mississippi State Contract Discount: 25%

MASSEY FERGUSON®

(F.O.B. PORT OF ENTRY)

Order Code	Catalog Number	Description	Approx. Weight (lb.)	List Price
CAB				
125-AE042	7293546	Superluxe Grammar Seat		1,722.00
145-AL009	7293547	Telescopic Large Side Mirrors with Electric De-Icing and Adjustment		453.00
120-AQ004	7293082	Automatic Climate Control		1,197.00
115-AM015	7295130	Standard Cab Isolation		TBA
280-GZ001	7293129	Park Lock, Electronic Activated Park Brake Mounted on Shuttle Lever		2,621.00
FRONT WEIGHTS				
285-YA000	Base	Front Weight Carrier		**In Base**
285-YA112	7293487	121 lbs. (55 kgs.) Front Weights, Set of 12 with Hardware - total Weight 1,455 lbs. (660 kgs.) Not compatible with Monoblock Weights (YB003 and YB004) or Front Hitch (F1150, F1151, or F1152)		2,228.00
REAR WHEEL WEIGHTS				
325-RD040	7294192	551 lbs. (250 kgs.) Weights, Set of 2 Mounts Externally to Wheel	1102	1,791.00
325-RD041	7294200	551 lbs. (250 kgs.) Weights, Set of 4 Mounts Externally to Wheel	2204	3,582.00
BELLY AND HITCH WEIGHTS				
245-YD001	7293374	1 Belly Weight - 584 lbs. (265 kgs.) (For use **WITHOUT** Front 3-Point Hitch)	584	1,447.00
345-YB003*	7294270	1,875 lbs (850 kg) Monoblock Weight		3,307.00
345-YB004*	7294271	3,307 lbs (1500 kg) Monoblock Weight		5,512.00
*Not Compatible with Front Weights				
ELECTRICAL				
215-CB002	Base	Engine Block Heater - 110 Volt		**In Base**
215-CB000	7293593	Less Engine Block Heater		(207.00)
ALTERNATOR				
220-CE019	Base	Twin 120 AMP Alternators.		**In Base**
220-CE020	7293561	175 AMP Alternator. (Not Available with ISOBUS)		(380.00)
LIGHTING				
205-VF013	7293103	Dual Roof-Mounted Rotating Beacons, Left and Right (Includes SAE SMV sign)		502.00
195-VG078	7295103	2 Xenon and 2 Single Bulb Front Worklights, 2 Xenon Rear Worklights		3,293.00

7700 LARGE FRAME DELUXE EDITION

MASSEY FERGUSON®

Mississippi State Contract Discount: 25%

(F.O.B. PORT OF ENTRY)

Order Code	Catalog Number	Description	Approx. Weight (lb.)	List Price
PIVOTING FRONT FENDERS				
155-WE110	Base	Pivoting Front Fenders - Standard Width . . . . . Width depends on tire selection; see Chart Below		**In Base**
155-WE111	7293598	Pivoting Front Fenders - Wide Width . . . . . Width depends on tire selection; see Chart Below		116.00

Fender Size		
Standard	**Wide**	**Tire Sizes**
12.6" (320 mm)	13.9" (355 mm)	320/85R34 (12.4R34) 320/85R38 (12.4R38)
14.9" (380 mm)	16.1" (410 mm)	380/85R30 (14.9R30) 380/85R34 (14.9R34) 400/80R28
16.1" (410 mm)	18.5" (470 mm)	420/85R28 (16.9R28) 420/85R30 (16.9R30) 420/90R30
18.5" (470 mm)	20.4" (520 mm)	480/70R30
20.4" (520 mm)	24.4" (620 mm)	540/65R28 540/65R30
24.4" (620 mm)	27.5" (700 mm)	600/65R28 710/55R30

REAR FENDERS				
255-WD012	Base	Rear Fenders without Extensions, 78.74"(2.00 M) . . .		**In Base**
255-WD017	7293107	Wide Fender -90.55" (2.3 M) with Rear Extension . . .		1,272.00
255-WD020	7293109	Extra Wide Fender -100.4" (2.55 M) . . . . . with Rear Extension		1,421.00

7700 LARGE FRAME DELUXE EDITION

Mississippi State Contract Discount: 25%

MASSEY FERGUSON®

(F.O.B. PORT OF ENTRY)

Order Code	Catalog Number	Description	Approx. Weight (lb.)	List Price
MISCELLANEOUS				
35-EN001	7293092	Creeper Gear (4:1 Reduction). . . . . **(Available on Dyna-6 Editions Only)** (Not compatible with Loader Provision and/or Front Hitch)		2,297.00
250-GS001	7293100	Hydraulic Trailer Brakes		785.00
250-GS067	7293552	Pneumatic and Hydraulic Trailer Brakes		7,289.00
225-LQ001	7293553	Water Separator (Fuel Filter)		448.00
275-TC005	7294210	French Language OIB.		No Charge
275-TC011	7294211	Spanish Language OIB		No Charge

DEALER INSTALLED OPTIONS

FRONT WEIGHTS

BEAUVAIS BUILT

5020186M	8 x 55 kg. (121 lbs.) Front Weights	968	1,485.00
5020187M	10 x 55 kg. (121 lbs.) Front Weights	1210	1,857.00
5020188M	12 x 55 kg. (121 lbs.) Front Weights	1452	2,228.00
5020189M	14 x 55 kg. (121 lbs.) Front Weights	1694	2,600.00
5020190M	16 x 55 kg. (121 lbs.) Front Weights	2,971.00	

JACKSON BUILT

5020186JM	8 x 55 kg. (121 lbs.) Front Weights	968	1,485.00
5020187JM	10 x 55 kg. (121 lbs.) Front Weights	1210	1,857.00
5020188JM	12 x 55 kg. (121 lbs.) Front Weights	1452	2,228.00
5020189JM	14 x 55 kg. (121 lbs.) Front Weights	1694	2,600.00
5020190JM	16 x 55 kg (121 lbs.) Front Weights	1936	2,971.00

REAR WEIGHT PACKAGE

BEAUVAIS BUILT

5020202M	Additional Rear Wheel Weight Package - . . . . . set of 2 x 250kg (550 lbs) 250kg Weight Adapter for 10 Bolt Hub (order weights separately)		TBA

JACKSON BUILT

5020202JM	Additional Rear Wheel Weight Package - . . . . . set of 2 x 250kg (550 lbs) 250kg Weight Adapter for 10 Bolt Hub (order weights separately)		1,970.00

7700 LARGE FRAME PREMIUM EDITION

MASSEY FERGUSON®

Mississippi State Contract Discount: 25%

(F.O.B. PORT OF ENTRY)

PREMIUM EDITION FEATURES

ENGINE

7719 / 7720 Dyna-6, 7719 / 7720 Dyna-VT:
AP66-4: AGCO POWER 6.6L (402 cu in.) 6 Cylinder, Tier 4f Compliant

- SCR Technology
- Air-to-Air Aftercooled, Common Rail Injection, Turbocharged

7722 / 7724 / 7726 Dyna-6, 7722 / 7724 / 7726 Dyna-VT:
AP74-4: AGCO POWER 7.4L (452 cu in.) 6 Cylinder, Tier 4f Compliant

- SCR Technology
- Air-to-Air Aftercooled, Common Rail Injection, Turbocharged

Electronic Engine Management (EEM) with Dual ERPM Settings
Electronic Controlled Viscous Fan Drive
Dual Element Dry Type Air Cleaner
Vertical Exhaust at Right Front Cab Post
Cooling System: Antifreeze to Minus 30°F (-34°C)
Fuel Tank Capacity: 114 Gal (430)
DEF Tank Capacity: 11 Gal (40L)
Engine Block Heater (110V)

POWERTRAIN

Dyna-VT:

- Continuously Variable Transmission, 31 MPH (50 KPH)
- Dynamic Tractor Management (DTM) with Two Programmable Cruise Speeds
- Long Bar Rear Axle 118 in. (3002mm) Long, 3.74 in. (95mm) Diameter

Dyna-6:

- 24F/24R Semi-Powershift, 4 Ranges with 6 Powershifts per Range
- Dynamic Tractor Management (DTM) with Two Programmable Cruise Speeds

7719 / 7720 / 7722: Long Bar Rear Axle 112 in. (2847mm) Long, 3.74 in (95mm) Diameter
7724 / 7726: Long Bar Rear Axle 118.2 in. (3002mm) Long, 4.33 in. (110mm) Diameter
Multi-Disc Wet Brakes
Power Differential Lock
Independent PTO
Park Lock
Dyna-VT: 540/540E/1000/1000E RPM Flanged Shaft, 540 with 6 Spline and 1000 with 21 Spline with Electric Control
Dyna-6: 540/540E/1000 RPM Flanged Shaft, 540 with 6 Spline and 1000 with 21 Spline with Electric Control
Rear Fender Mounted PTO Shut-Off
SV1 & SV2 Settings

FRONT WHEEL ASSIST AXLE

Power Front Axle (PFA)
Suspended Front Axle
Shielded Center Drive Line with Electro-Hydraulic Control & Front Wheel Drive Differential Lock
55 Degree Steering Angle
SpeedSteer

HYDRAULICS

Closed Center Load Sensing 29 gpm (110 L/Min) Pump
2900 PSI (200 Bar) Maximum Pressure
4 Electric Valves - Fingertip Controlled, 2 Located on Armrest, 2 Located Right Hand Console
Hydrostatic Power Steering
Power Beyond
Fender Control Spool Valve Control

ELECTRICAL SYSTEM

2 – 120 Amp Alternators
2 – 12V Batteries, 600 CCA Each (SAE)
7 Pin ASAE Rear Trailer Electrical Outlet
Electrical Isolator Switch and Jumpstart Point
Ignition with Neutral Start and Key Shutoff

HITCH

3 Point Hitch: Category 3 Linkage Ball Ends with Quick Hitch

- Active Transport Control
- Lower Link Sensing
- Electronic Draft Control, Electronic Height Control, and Rate of Drop
- Rub Block Stabilizers
- Left and Right Side External 3 Point Control

7719 / 7720 / 7722: Swinging Category II Drawbar w/ Clevis & Drop Pin
7724 / 7726: Swinging Category III Drawbar w/ Clevis & Drop Pin

LIGHTING

8 Front Hood Mounted Lights
Four Front Single Bulb Worklights
Two Rear Double Bulb Worklights
Two Field Lights on Hand Rails and Rear Fenders with Taillights, Flashing Warning Lights, and Turn Signals

INSTRUMENTS

Control Center Display (CCD)

- Video Input
- Electric Valve Control
- ISOBUS Compliant

Radar with Slip Control
Tachometer: Digital and Analog
PTO Speed: Digital
Ground Speed Display: Digital
Fuel Level, DEF Level, and Coolant Temp Gauges
Warning/Information Lights

OPERATOR AREA

Instructors Seat with Seat Belt
2 Electrical Sockets
Mechanical Cab Suspension
6 Post Cab
Power Control Shuttle- Multi Pad on Armrest
Adjustable Steering Column
Front Sun Visor
Automatic Climate Control
Air Suspended Seat - Automatic Adjustment
Front and Rear Windshield Wiper/Washer
Dual Large Telescoping Outside Rear View Mirrors with De-Icing
Single Inside Rear View Mirror
CD Player, Bluetooth, Radio with Antenna & Speakers (MP3 Compatible)
3 Pin 12V Power Outlet
12V Cigarette Lighter Style Power Outlet
ISO 11783 9-Pin in Cab Connector
ISO 11786 7-Pin in Cab Connector

WHEELS AND TIRES

7719 / 7720 / 7722
Rear 480/80R42 R1W Single Semi-Dished Cast Center Wheels
Front 420/85R28 R1W Single Waffle Wheels
7724 / 7726
Rear 480/80R46 R1W Single Semi-Dished Cast Center Wheels
Front 420/90R30 R1W Single Waffle Wheels

OTHER STANDARD FEATURES

Auto-Steer Complete: Auto-Guide™ 3000 Sub-Meter (WAAS and OmniStar VBS)
Auto Steering System using the Control Center Display (CCD)
Full AGCOMMAND Ready with Antenna, Bracket, and Harness (To Complete, See Technology Section)
Lockable Tool Box
SMV Sign
Molded Rear Fenders
English Literature

7700 LARGE FRAME PREMIUM EDITION

Mississippi State Contract Discount: 25%

MASSEY FERGUSON®

(F.O.B. PORT OF ENTRY)

Order Code	Catalog Number	Description	Approx. Weight (lb.)	List Price

ONE *ORDER CODE* FROM EACH GROUP MUST BE SPECIFIED. (Unless In Base Option is desired)

BASE MACHINE

DYNA-6 EDITIONS-- Beauvais Built

MF7719~D6~EX~02	7295205	Massey 7719 Premium Tractor 145 PTO HP		185,799.00
MF7720~D6~EX~02	7295206	Massey 7720 Premium Tractor 155 PTO HP		192,005.00
MF7722~D6~EX~02	7295207	Massey 7722 Premium Tractor 165 PTO HP		201,315.00
MF7724~D6~EX~02	7295208	Massey 7724 Premium Tractor 180 PTO HP		211,989.00
MF7726~D6~EX~02	7295209	Massey 7726 Premium Tractor 200 PTO HP		221,027.00

DYNA-VT EDITIONS-- Jackson Built

MF7719~DV~EX~02	7295215	Massey 7719 Premium Tractor 145 PTO HP		197,604.00
MF7720~DV~EX~02	7295216	Massey 7720 Premium Tractor 155 PTO HP		203,811.00
MF7722~DV~EX~02	7295217	Massey 7722 Premium Tractor 165 PTO HP		213,120.00
MF7724~DV~EX~02	7295218	Massey 7724 Premium Tractor 180 PTO HP		223,794.00
MF7726~DV~EX~02	7295219	Massey 7726 Premium Tractor 200 PTO HP		232,833.00

TRANSMISSION OPTIONS FOR DYNA-6 EDITIONS

25-EA656	Base	6x4 Dyna-6 Transmission with 24F/24R gears. . . . 31 MPH (50 KPH) with Dynamic Tractor Management (DTM). Includes Suspended Front Axle and High Capacity Power Assist Brakes		**In Base**
25-G1064	7295158	6X4 Dyna-6 Transmission with 24F/24R gears . . . . 25 MPH (40 KPH) with Dynamic Tractor Management (DTM) Includes: Suspended Front Axle and Power Assist Brakes		1,585.00

TRANSMISSION OPTIONS FOR DYNA-VT EDITIONS

25-EA622	Base	Dyna-VT Transmission - 31 MPH (50 KPH)		**In Base**

(F.O.B. PORT OF ENTRY)

Order Code	Catalog Number	Description	Approx. Weight (lb.)	List Price
AUXILIARY HYDRAULIC FLOW				
DYNA-6				
370-DP110	Base	29 GPM (110 L/min) Closed Center Load Sensing . . .		**In Base**
370-DP150	7293529	39 GPM (150 L/min) Closed Center Load Sensing . . .		1,327.00
DYNA-VT				
370-DP110	Base	29 GPM (110 L/min) Closed Center Load Sensing . . .		**In Base**
370-DP190	7293697	50 GPM (150 L/min) Closed Center Load Sensing . . .		986.00
AUXILIARY VALVE 1 & 2				
50-KX011	Base	Valves 1 and 2 Electric, Fingertip Controlled Spool Valves Fingertips Located in Armrest		**In Base**
50-KX012	7293530	Valves 1 and 2 Electric, with Multifunction Joystick on the Armrest (Required when Choosing Factory Installed Loader Provisions (LL004))		No Charge
TO UTILIZE THE FACTORY INSTALLED MULTIFUNCTION JOYSTICK WITH A LOADER, THE TRACTOR MUST BE EQUIPPED WITH THE LOADER PROVISIONS FROM THE FACTORY.				
AUXILIARY VALVE 3, 4 & 5				
55-MU031	Base	3rd and 4th Electric, Fingertip Controlled Valves . . . . with Fingertips located on Right Hand Console		**In Base**
55-MU041	7293534	3rd, 4th, and 5th Electric, Controlled Valves . . . . . with 3 and 4 Fingertips located on Right Hand Console and the 5th Control located on the Multicontroller Control		1,794.00
POWER BEYOND				
90-GR010	Base	Power Beyond Couplers P/T/LS/D		**In Base**
90-GR000	7293665	Less Power Beyond		(716.00)
REAR AXLE				
DYNA-6				
FOR 7719 - 7722				
60-EE404	Base	Long Bar Rear Axle, 112 in. (2847 mm) long . . . . . 3.74 in. (95 mm) diameter		**In Base**
60-EE402	7293527	Short Bar Rear Axle, 84.4 in. (2144 mm) long . . . . . 3.74 in. (95 mm) diameter		(591.00)
FOR 7724 / 7726				
60-EE405	Base	Long Bar Rear Axle, 118.2 in. (3002 mm) long . . . . . 4.33 in. (110 mm) diameter		**In Base**
60-EE403	7293528	Short Bar Rear Axle, 86.7 in. (2202 mm) long . . . . . 4.33 in. (110 mm) diameter		(591.00)
DYNA-VT				
60-EE404	Base	Long Bar Rear Axle, 118 in. (3002 mm) long, ... 3.74 in. (95 mm) diameter		**In Base**
60-EE402	7293527	Short Bar Rear Axle, 97.2 in. (2469 mm) long. . . . . 3.74 in. (95 mm) diameter		(591.00)

Order Code	Catalog Number	Description	Approx. Weight (lb.)	List Price
DRAWBAR				
FOR 7719 - 7722				
95-YM027	Base	Swinging Category II Drawbar w/ Clevis & Drop Pin . .		**In Base**
95-YM242	7293695	Swinging Category III Drawbar w/ Clevis & Drop Pin . .		867.00
FOR 7724 - 7726				
95-YM242	Base	Swinging Category III Drawbar w/ Clevis & Drop Pin . .		**In Base**
95-YM027	7293696	Swinging Category II Drawbar w/ Clevis & Drop Pin . .		(320.00)
REAR 3-POINT HITCH				
85-GC210	Base	Category 3 Fixed Ball End Links with Category 3/3N Quick Hitch		**In Base**
85-GC009	7293694	Category 3 Fixed Ball End Links		(1,307.00)
INSTRUMENT PANEL / CONTROL CENTER DISPLAY (CCD)				
LESS AUTO-STEERING READY				
175-BA008	7293679	Analog and Digital Instrument Panel, Control Center . . Display (CCD) with Video Input, Electric Valve Control, Radar with Slip Control and ISOBUS.		(4,973.00)
AUTO-STEERING READY				
175-BA012	7293678	Analog and Digital Instrument Panel, Control Center . . Display (CCD) with Video Input, Electric Valve Control, Radar with Slip Control and ISOBUS. (Includes Roof Plate and Wiring Harness) *Order Auto-Guide™ 3000 TopDock Separately* *See Technology Section*		(4,828.00)
		Note: The Control Center Display (CCD) is required to utilize Auto-Guide™ 3000.		
AUTO-STEERING COMPLETE				
175-BA021	Base	Analog and Digital Instrument Panel, Control Center . . Display (CCD) with Video Input, Electric Valve Control, and ISOBUS. Radar with Slip Control. Auto-Guide™ 3000 Sub-Meter (WAAS and OmniStar VBS) Auto Steering System. (Requires SpeedSteer) Auto-Guide™ 3000 uses the Control Center Display (CCD).		**In Base**
SPEEDSTEER				
185-AD004	Base	SpeedSteer Option		**In Base**
185-AD002	7293558	Less SpeedSteer Option . . . . . (Not Available with BA012 and In Base Instrument Control Panel)		(900.00)

(F.O.B. PORT OF ENTRY)

TIRES for 7719, 7720 and 7722 with Dyna-6 Transmission

TIRE BRAND SELECTION

Order Code	Catalog Number	Description	Approx. Weight (lb.)	List Price
70-Blank	7294212	Factory Brand Choice		No Charge
70-T0001	7294195	Michelin Brand Required		1,552.00
70-T0007	7294197	Firestone Brand Required		1,158.00
70-T0010	7294198	Trelleborg Brand Required		1,158.00

FRONT AND REAR TIRES

Order Code	Catalog Number	Description	Approx. Weight (lb.)	List Price
		Rear: Single Welded Pressed Steel - Set of 2 ***Front: Fixed Welded Steel Rim***		
75-W1585	7294857B3 7294793B1	Rear: 710/70R38 R1W (MI, TR) Front: 600/65R28 R1W (MI, TR)		4,139.00
75-W1716	7294858B3 7294793B1	Rear: 620/70R42 R1W (MI, TR) Front: 600/65R28 R1W (MI, TR)		3,548.00
		Rear: Single Semi Dished Cast Centers- Set of 2 ***Front: Waffle Wheel***		
75-Base	7294882B3 7294762B1	Rear: 480/80R42 R1W (18.4R42 R1W) (MI, TR) Front: 420/85R28 R1W (16.9R28 R1W) (MI, TR)		**In Base**
75-W1377	7294882B3 7294765B1	Rear: 480/80R42 R1W (18.4R42 R1W) (MI, TR) Front: 380/85R30 R1W (14.9R30 R1W) (MI, TR)		(621.00)
75-W1485	7294870B3 7294766B1	Rear: 520/85R42 R1W (20.8R42 R1W) (MI, TR) Front: 420/85R30 R1W (16.9R30 R1W) (MI, TR)		875.00
75-W1325	7294870B3 7294767B1	Rear: 520/85R42 R1W (20.8R42 R1W) (MI) Front: 420/90R30 R1W (MI)		1,315.00
75-W1398	7294870B3 7294770B1	Rear: 520/85R42 R1W (20.8R42 R1W) (MI, TR) Front: 380/85R34 R1W (14.9R34 R1W) (MI, TR)		1,068.00
75-W1626	7294871B3 7294766B1	Rear: 480/80R46 R1W (18.4R46 R1W) (MI, TR) Front: 420/85R30 R1W (16.9R30 R1W) (MI, TR)		564.00
75-W1413	7294871B3 7294767B1	Rear: 480/80R46 R1W (18.4R46 R1W) (MI) Front: 420/90R30 R1W (MI)		1,004.00
75-W1349	7294871B3 7294770B1	Rear: 480/80R46 R1W (18.4R46 R1W) (MI, TR) Front: 380/85R34 R1W (14.9R34 R1W) (MI, TR)		757.00
75-W1802	7294911B3 7294770B1	Rear: 380/90R50 R1W (FI) Front: 380/85R34 R1W (14.9R34 R1W) (FI)		1,505.00
75-W1354	7294875B3 7294773B1	Rear: 320/90R54 R1W (MI) Front: 320/85R38 R1W (MI)		3,237.00

(F.O.B. PORT OF ENTRY)

Order Code	Catalog Number	Description	Approx. Weight (lb.)	List Price

TIRES for 7719, 7720 and 7722 with Dyna-6 Transmission

FRONT AND REAR TIRES - CONTINUED

Rear: Dual Cast Inner / Steel Outer - Set of 4
Front: Waffle Wheel

75-W1386	7294886B3	Duals: 480/80R42 R1W (18.4R42 R1W) (MI, TR) . . .		6,526.00
	7294762B1	Front: 420/85R28 R1W (16.9R28 R1W) (MI, TR)		
75-W1380	7294886B3	Duals: 480/80R42 R1W (18.4R42 R1W) (MI, TR) . . .		5,905.00
	7294765B1	Front: 380/85R30 R1W (MI, TR)		
75-W1596	7294863B3	Duals: 520/85R42 R1W (20.8R42 R1W) (MI, TR) . . .		9,075.00
	7294766B1	Front: 420/85R30 R1W (16.9R30 R1W) (MI, TR)		
75-W1391	7294863B3	Duals: 520/85R42 R1W (20.8R42 R1W) (MI)		9,515.00
	7294767B1	Front: 420/90R30 R1W (MI)		
75-W1399	7294863B3	Duals: 520/85R42 R1W (20.8R42 R1W) (MI, TR) . . .		9,268.00
	7294770B1	Front: 380/85R34 R1W (14.9R34 R1W) (MI, TR)		
75-W1627	7294864B3	Duals: 480/80R46 R1W (18.4R46 R1W) (MI, TR) . . .		8,540.00
	7294766B1	Front: 420/85R30 R1W (16.9R30 R1W) (MI, TR)		
75-W1414	7294864B3	Duals: 480/80R46 R1W (18.4R46 R1W) (MI)		8,980.00
	7294767B1	Front: 420/90R30 R1W (MI)		
75-W1401	7294864B3	Duals: 480/80R46 R1W (18.4R46 R1W) (MI, TR) . . .		8,733.00
	7294770B1	Front: 380/85R34 R1W (14.9R34 R1W) (MI, TR)		
75-W1745	7294866B3	Duals: 380/90R50 R1W (14.9R50 R1W) (FI)		8,018.00
	7294770B1	Front: 380/85R34 R1W (14.9R34 R1W) (FI)		
75-W1404	7294868B3	Duals: 320/90R54 R1W (MI)		9,302.00
	7294773B1	Front: 320/85R38 R1W (MI)		

Rear: Dual Cast Inner / Steel Outer - Set of 4
Front: Welded Wheel

75-W1821	7294863B3	Duals: 520/85R42 R1W (20.8R42 R1W) (MI, TR) . . .		11,728.00
	7294793B1	Front: 600/65R28 R1W (MI, TR)		

(F.O.B. PORT OF ENTRY)

Order Code	Catalog Number	Description	Approx. Weight (lb.)	List Price

TIRES for 7724 and 7726 with Dyna-6 Transmission

TIRE BRAND SELECTION

70-Blank	7294212	Factory Brand Choice	No Charge
70-T0001	7294195	Michelin Brand Required	1,552.00
70-T0007	7294197	Firestone Brand Required	1,158.00
70-T0010	7294198	Trelleborg Brand Required	1,158.00

FRONT AND REAR TIRES

Rear: Single Welded Pressed Steel - Set of 2
Front: Fixed Welded Steel Rim

75-W1585	7294857B2 7294793	Rear: Front:	710/70R38 R1W (MI, TR) 600/65R28 R1W (MI, TR)	3,135.00
75-W1716	7294858B2 7294793	Rear: Front:	710/70R42 R1W (MI, TR) 600/65R28 R1W (MI, TR)	2,544.00

Rear: Single Semi Dished Cast Centers- Set of 2
Front: Waffle Wheel

75-Base	7294871B2 7294767	Rear: Front:	480/80R46 R1W (18.4R46 R1W) (MI) 420/90R30 R1W (MI)	**In Base**
75-W1485	7294870B2 7294766	Rear: Front:	520/85R42 R1W (20.8R42 R1W) (MI, TR) 420/85R30 R1W (16.9R30 R1W) (MI, TR)	(129.00)
75-W1398	7294870B2 7294770	Rear: Front:	520/85R42 R1W (20.8R42 R1W) (MI, TR) 380/85R34 R1W (14.9R34 R1W) (MI, TR)	64.00
75-W1384	7294882B2 7294762	Rear: Front:	480/80R42 R1W (18.4R42 R1W) (MI, TR) 420/85R28 (16.9R28 R1W) R1W (MI, TR)	(1,004.00)
75-W1325	7294870B2 7294767	Rear: Front:	520/85R42 R1W (20.8R42 R1W) (MI) 420/90R30 R1W (MI)	311.00
75-W1377	7294882B2 7294765	Rear: Front:	480/80R42 R1W (18.4R42 R1W) (MI, TR) 380/85R30 (14.9R30) R1W (MI, TR)	(1,625.00)
75-W1626	7294871B2 7294766	Rear: Front:	480/80R46 R1W (18.4R46 R1W) (MI, TR) 420/85R30 (16.9R30) R1W (MI, TR)	(440.00)
75-W1349	7294871B2 7294770	Rear: Front:	480/80R46 R1W (18.4R46 R1W) (MI, TR) 380/85R34 (14.9R34) R1W (MI, TR)	(247.00)

(F.O.B. PORT OF ENTRY)

TIRES for 7724 and 7726 with Dyna-6 Transmission

FRONT AND REAR TIRES - CONTINUED

Order Code	Catalog Number	Description	Approx. Weight (lb.)	List Price
		Rear: Dual Cast Inner / Steel Outer - Set of 4 ***Front: Waffle Wheel***		
75-W1386	7294886B2	Duals: 480/80R42 R1W (18.4R42 R1W) (MI, TR) . . .		5,522.00
	7294762	Front: 420/85R28 R1W (16.9R28 R1W) (MI, TR)		
75-W1380	7294886B2	Duals: 480/80R42 R1W (18.4R42 R1W) (MI, TR) . . .		4,901.00
	7294765	Front: 380/85R30 R1W (MI, TR)		
75-W1596	7294863B2	Duals: 520/85R42 R1W (20.8R42 R1W) (MI, TR) . . .		8,071.00
	7294766	Front: 420/85R30 R1W (16.9R30 R1W) (MI, TR)		
75-W1391	7294863B2	Duals: 520/85R42 R1W (20.8R42 R1W) (MI, TR) . . .		8,511.00
	7294767	Front: 420/90R30 R1W (MI, TR)		
75-W1399	7294863B2	Duals: 520/85R42 R1W (20.8R42 R1W) (MI, TR) . . .		8,264.00
	7294770	Front: 380/85R34 R1W (14.9R34 R1W) (MI, TR)		
75-W1627	7294864B2	Duals: 480/80R46 R1W (18.4R46 R1W) (MI, TR) . . .		7,535.00
	7294766	Front: 420/85R30 R1W (16.9R30 R1W) (MI, TR)		
75-W1414	7294864B2	Duals: 480/80R46 R1W (18.4R46 R1W) (MI)		7,975.00
	7294767	Front: 420/90R30 R1W (MI)		
75-W1401	7294864B2	Duals: 480/80R46 R1W (18.4R46 R1W) (MI, TR) . . .		7,728.00
	7294770	Front: 380/85R34 R1W (14.9R34 R1W) (MI, TR)		
75-W1404	7294868B2	Duals: 320/90R54 R1W (MI)		8,297.00
	7294773	Front: 320/85R38 R1W (MI)		
75-W1745	7294866B2	Duals: 380/90R50 R1W (14.9R50 R1W) (FI).		7,013.00
	7294770	Front: 380/85R34 R1W (14.9R34 R1W) (FI)		
		Rear: Dual Cast Inner / Steel Outer - Set of 4 ***Front: Welded Wheel***		
75-W1821	7294863B2	Duals: 520/85R42 R1W (20.8R42 R1W) (MI, TR) . . .		10,724.00
	7294793	Front: 600/65R28 R1W (MI, TR)		

(F.O.B. PORT OF ENTRY)

Order Code	Catalog Number	Description	Approx. Weight (lb.)	List Price

TIRES for 7719, 7720 and 7722 with Dyna-VT Transmission

TIRE BRAND SELECTION

70-Blank	7294212	Factory Brand Choice	No Charge
70-T0001	7294195	Michelin Brand Required	1,552.00
70-T0002	7294196	Goodyear Brand Required	1,158.00
70-T0007	7294197	Firestone Brand Required	1,158.00
70-T0010	7294198	Trelleborg Brand Required	1,158.00

FRONT AND REAR TIRES*

***11 weeks out for changes on Jackson Built Models**

Rear: Single Welded Pressed Steel - Set of 2
Front: Fixed Welded Steel Rim

75-W1585	7294857B3	Rear:	710/70R38 R1W (MI, FI, GY, TR)	4,139.00
	7294793B1	Front:	600/65R28 R1W (MI, FI, GY, TR)	
75-W1716	7294858B3	Rear:	710/70R42 R1W (MI, FI, GY, TR)	3,548.00
	7294793B1	Front:	600/65R28 R1W (MI, FI, GY, TR)	

Rear: Single Semi Dished Cast Centers- Set of 2
Front: Waffle Wheel

75-Base	7294882B3	Rear:	480/80R42 R1W (18.4R42 R1W) (MI, FI, TR)	**In Base**
	7294762B1	Front:	420/85R28 R1W (16.9R28 R1W) (MI, FI, TR)	
75-W1377	7294882B3	Rear:	480/80R42 R1W (18.4R42 R1W) (MI, FI, TR)	(621.00)
	7294765B1	Front:	380/85R30 R1W (MI, FI, TR)	
75-W1485	7294870B3	Rear:	520/85R42 R1W (20.8R42 R1W) (MI, GY, TR)	875.00
	7294766B1	Front:	420/85R30 R1W (16.9R30 R1W) (MI, GY, TR)	
75-W1325	7294870B3	Rear:	520/85R42 R1W (20.8R42 R1W) (MI, FI, GY)	1,315.00
	7294767B1	Front:	420/90R30 R1W (MI, FI, GY)	
75-W1398	7294870B3	Rear:	520/85R42 R1W (20.8R42 R1W) (MI, GY, TR)	1,068.00
	7294770B1	Front:	380/85R34 R1W (14.9R34 R1W) (MI, GY, TR)	
75-W1626	7294871B3	Rear:	480/80R46 R1W (18.4R46 R1W) (MI, GY, TR)	564.00
	7294766B1	Front:	420/85R30 R1W (16.9R30 R1W) (MI, GY, TR)	
75-W1413	7294871B3	Rear:	480/80R46 R1W (18.4R46 R1W) (MI, FI, GY)	1,004.00
	7294767B1	Front:	420/90R30 R1W (MI, FI, GY)	
75-W1349	7294871B3	Rear:	480/80R46 R1W(18.4R46 R1W)(MI,FI,GY,TR)	757.00
	7294770B1	Front:	380/85R34 R1W (14.9R34 R1W) (MI, FI, GY, TR)	
75-W1862	7294921B3	Rear:	VF480/80R46 (MI)	TBA
	7294924B1	Front:	VF380/85R34 (MI)	
75-W1802	7294911B3	Rear:	380/90R50 R1W (FI,GY)	1,505.00
	7294770B1	Front:	380/85R34 R1W (14.9R34 R1W) (FI, GY)	
75-W1354	7294875B3	Rear:	320/90R54 R1W (MI, FI, GY)	3,237.00
	7294773B1	Front:	320/85R38 R1W (MI, FI, GY)	

(F.O.B. PORT OF ENTRY)

TIRES for 7719, 7720 and 7722 with Dyna-VT Transmission

FRONT AND REAR TIRES - CONTINUED*

***11 weeks out for changes on Jackson Built Models**

Rear: Dual Cast Inner / Steel Outer - Set of 4
Front: Waffle Wheel

Order Code	Catalog Number	Description	Approx. Weight (lb.)	List Price
75-W1386	7294886B3	Duals: 480/80R42 R1W (18.4R42 R1W) (MI, FI, TR)		6,526.00
	7294762B1	Front: 420/85R28 R1W (16.9R28 R1W) (MI, FI, TR)		
75-W1380	7294886B3	Duals: 480/80R42 R1W (18.4R42 R1W) (MI, FI, TR)		5,905.00
	7294765B1	Front: 380/85R30 R1W (MI, FI, TR)		
75-W1596	7294863B3	Duals: 520/85R42 R1W (20.8R42 R1W) (MI, GY, TR)		9,075.00
	7294766B1	Front: 420/85R30 R1W (16.9R30 R1W) (MI, GY, TR)		
75-W1391	7294863B3	Duals: 520/85R42 R1W (20.8R42 R1W) (MI, FI, GY)		9,515.00
	7294767B1	Front: 420/90R30 R1W (MI, FI, GY)		
75-W1399	7294863B3	Duals: 520/85R42 R1W (20.8R42 R1W) (MI, GY, TR)		9,268.00
	7294770B1	Front: 380/85R34 R1W (14.9R34 R1W) (MI, GY, TR)		
75-W1627	7294864B3	Duals: 480/80R46 R1W (18.4R46 R1W) (MI, GY, TR)		8,540.00
	7294766B1	Front: 420/85R30 R1W (16.9R30 R1W) (MI, GY, TR)		
75-W1414	7294864B3	Duals: 480/80R46 R1W (18.4R46 R1W) (MI, FI, GY)		8,980.00
	7294767B1	Front: 420/90R30 R1W (MI, FI, GY)		
75-W1401	7294864B3	Duals: 480/80R46 R1W (18.4R46 R1W) (MI,FI,GY,TR)		8,733.00
	7294770B1	Front: 380/85R34 R1W (14.9R34 R1W) (MI, FI, GY, TR)		
75-W1864	7294919B3	Duals: VF480/80R46 R1W (MI)		TBA
	7294924B1	Front: VF380/85R34 R1W (MI)		
75-W1745	7294866B3	Duals: 380/90R50 R1W (14.9R50 R1W) (FI, GY)		8,018.00
	7294770B1	Front: 380/85R34 R1W (14.9R34 R1W) (FI, GY)		
75-W1404	7294868B3	Duals: 320/90R54 R1W (MI, FI, GY)		9,302.00
	7294773B1	Front: 320/85R38 R1W (MI, FI, GY)		

Rear: Dual Cast Inner / Steel Outer - Set of 4
Front: Welded Wheel

75-W1821	7294863B3	Duals: 520/85R42 R1W (20.8R42 R1W)(MI,FI,GY,TR)		11,728.00
	7294793B1	Front: 600/65R28 R1W (MI, FI, GY, TR)		

(F.O.B. PORT OF ENTRY)

Order Code	Catalog Number	Description	Approx. Weight (lb.)	List Price

TIRES for 7724 and 7726 with Dyna-VT Transmission

TIRE BRAND SELECTION

70-Blank	7294212	Factory Brand Choice	No Charge
70-T0001	7294195	Michelin Brand Required	1,552.00
70-T0002	7294196	Goodyear Brand Required	1,158.00
70-T0007	7294197	Firestone Brand Required	1,158.00
70-T0010	7294198	Trelleborg Brand Required	1,158.00

FRONT AND REAR TIRES

***11 weeks out for changes on Jackson Built Models**

Rear: Single Welded Pressed Steel - Set of 2
Front: Fixed Welded Steel Rim

75-W1585	7294857B2 7294793	Rear: Front:	710/70R38 R1W (MI, FI, GY, TR) 600/65R28 R1W (MI, FI, GY, TR)	3,135.00
75-W1716	7294858B2 7294793	Rear: Front:	710/70R42 R1W (MI, FI, GY, TR) 600/65R28 R1W (MI, FI, GY, TR)	2,544.00

Rear: Single Semi Dished Cast Centers- Set of 2
Front: Waffle Wheel

75-Base	7294871B2 7294767	Rear: Front:	480/80R46 R1W (18.4R46 R1W) (MI, FI, GY) 420/90R30 R1W (MI, FI, GY)	**In Base**
75-W1384	7294882B2 7294762	Rear: Front:	480/80R42 R1W (18.4R42 R1W) (MI, FI, TR) 420/85R28 (16.9R28 R1W) R1W (MI, FI, TR)	(1,004.00)
75-W1377	7294882B2 7294765	Rear: Front:	480/80R42 R1W (18.4R42 R1W) (MI, FI, TR) 380/85R30 (14.9R30) R1W (MI, FI, TR)	(1,625.00)
75-W1485	7294870B2 7294766	Rear: Front:	520/85R42 R1W (20.8R42 R1W) (MI, GY, TR) 420/85R30 R1W (16.9R30 R1W) (MI, GY, TR)	(129.00)
75-W1325	7294870B2 7294767	Rear: Front:	520/85R42 R1W (20.8R42 R1W) (MI, FI, GY) 420/90R30 R1W (MI, FI, GY)	311.00
75-W1398	7294870B2 7294770	Rear: Front:	520/85R42 R1W (20.8R42 R1W) (MI, GY, TR) 380/85R34 (14.9R34) R1W (MI, GY, TR)	64.00
75-W1626	7294871B2 7294766	Rear: Front:	480/80R46 R1W (18.4R46 R1W) (MI, GY, TR) 420/85R30 (16.9R30) R1W (MI, GY, TR)	(440.00)
75-W1349	7294871B2 7294770	Rear: Front:	480/80R46 R1W (18.4R46 R1W) (MI,FI,GY,TR) 380/85R34 (14.9R34) R1W (MI, FI, GY, TR)	(247.00)
75-W1862	7294921B2 7294924	Rear: Front:	VF480/80R46 (MI) VF380/85R34 (MI)	TBA

(F.O.B. PORT OF ENTRY)

TIRES for 7724 and 7726 with Dyna-VT Transmission

FRONT AND REAR TIRES - CONTINUED

***11 weeks out for changes on Jackson Built Models**

Rear: Dual Cast Inner / Steel Outer - Set of 4
Front: Waffle Wheel

Order Code	Catalog Number	Description	Approx. Weight (lb.)	List Price
75-W1386	7294886B2 7294762	Duals: 480/80R42 R1W (18.4R42 R1W) (MI, FI, TR) . Front: 420/85R28 R1W (16.9R28 R1W) (MI, FI, TR)		5,522.00
75-W1380	7294886B2 7294765	Duals: 480/80R42 R1W (18.4R42 R1W) (MI, FI, TR) . Front: 380/85R30 R1W (MI, FI, TR)		4,901.00
75-W1596	7294863B2 7294766	Duals: 520/85R42 R1W (20.8R42 R1W) (MI, GY, TR) Front: 420/85R30 R1W (16.9R30 R1W) (MI, GY, TR)		8,071.00
75-W1391	7294863B2 7294767	Duals: 520/85R42 R1W (20.8R42 R1W) (MI, FI, GY) . Front: 420/90R30 R1W (MI, FI, GY)		8,511.00
75-W1399	7294863B2 7294770	Duals: 520/85R42 R1W (20.8R42 R1W) (MI, GY, TR) Front: 380/85R34 R1W (14.9R34 R1W) (MI, GY, TR)		8,264.00
75-W1627	7294864B2 7294766	Duals: 480/80R46 R1W (18.4R46 R1W) (MI, GY, TR). Front: 42085R30 R1W (16.9R30 R1W) (MI, GY, TR)		7,535.00
75-W1414	7294864B2 7294767	Duals: 480/80R46 R1W (18.4R46 R1W) (MI, FI, GY) . Front: 420/90R30 R1W (MI, FI, GY)		7,975.00
75-W1401	7294864B2 7294770	Duals: 480/80R46 R1W (18.4R46 R1W) (MI,FI,GY,TR) Front: 380/85R34 R1W (14.9R34 R1W) (MI, FI, GY, TR)		7,728.00
75-W1864	7294919B2 7294924	Duals: VF480/80R46 R1W (MI) . . . . . . Front: VF380/85R34 R1W (MI)		TBA
75-W1745	7294866B2 7294770	Duals: 380/90R50 R1W (14.9R50 R1W) (FI, GY) . . . Front: 380/85R34 R1W (14.9R34 R1W) (FI, GY)		7,013.00
75-W1404	7294868B2 7294773	Duals: 320/90R54 R1W (MI, FI, GY) . . . . . . Front: 320/85R38 R1W (MI, FI, GY)		8,297.00

Rear: Dual Cast Inner / Steel Outer - Set of 4
Front: Welded Wheel

75-W1821	7294863B2 7294793	Duals: 520/85R42 R1W (20.8R42 R1W) (MI,FI,GY,TR) Front: 600/65R28 R1W (MI, FI, GY, TR)		10,724.00

7700 LARGE FRAME PREMIUM EDITION

Mississippi State Contract Discount: 25%

MASSEY FERGUSON®

(F.O.B. PORT OF ENTRY)

Order Code	Catalog Number	Description	Approx. Weight (lb.)	List Price
PTO				
DYNA-6 ONLY				
100-LA045	Base	2000 Engine RPM with 540/540e/1000RPM flanged PTO in Cab Control - 6 & 21 spline studs		**In Base**
100-LA100	7295156	2000 Engine RPM with 540e/1000e/1000RPM . . . . . flanged PTO, in Cab Control - 6 & 21 spline studs		250.00
FRONT HITCH				
230-FA000	Base	Less Front Hitch		**In Base**
230-F1150*	7295131	8,818 lbs. (4000 kg.) Front Linkage, Double Acting . . Cylinder with 2 Sets of Hydraulic Couplers with Pressure Drain		5,865.00
230-F1151*	7295132	8,818 lbs. (4000 kg.) Front Linkage, Double Acting . . Cylinder with 2 Sets of Hydraulic Couplers with Pressure Drain and Belly Weight		6,736.00
230-F1152*	7295133	8,818 lbs. (4000 kg.) Front Linkage, Double Acting . . Cylinder with 2 Sets of Hydraulic Couplers with Pressure Drain and Front PTO (21 Spline Anti-Clockwise)		15,100.00

*Requires: Suspended Front Axle and is not compatible with Creeper

LOADER PROVISION				
350-LL000	Base	Less Loader Provisions . . . . . (**Requires In Base Power Beyond)**		**In Base**
350-LL004*	7293484	Front Loader Provisions including Hydraulics, ... Subframe. Requires: Valves 1 and 2 Electric with a Joystick (KX012) Not Compatible with Creeper		5,853.00
RADIO				
DYNA-6				
365-AF011	Base	CD Player, Bluetooth, Radio with Antenna & . . . . . Speakers (MP3 Compatible)		**In Base**
365-AF009	7294249	Radio with Antenna & Speakers (MP3 Compatible). . .		(110.00)
365-AF001	7295157	Antenna and Speakers		(195.00)
DYNA-VT				
	5020425JM	CD Player, Bluetooth, Radio with Antenna & . . . . . Speakers (MP3 Compatible)		**In Base**
	5020428JM	Radio with Antenna and Speakers (MP3 Compatible) .		(110.00)
	5020424JM	Antenna and Speakers		(195.00)
CAB				
125-AE042	7293546	Superluxe Grammar Seat		1,722.00

7700 LARGE FRAME PREMIUM EDITION

Mississippi State Contract Discount: 25%

MASSEY FERGUSON®

(F.O.B. PORT OF ENTRY)

Order Code	Catalog Number	Description	Approx. Weight (lb.)	List Price
FRONT WEIGHTS				
285-YA000	Base	Front Weight Carrier		**In Base**
285-YA112	7293487	121 lbs. (55 kgs.) Front Weights, Set of 12 . . . . . with Hardware - total Weight 1,455 lbs. (660 kgs.) Not compatible with Monoblock Weights (YB003 and YB004) or Front Hitch (F1150, F1151, or F1152)		2,228.00
REAR WHEEL WEIGHTS				
325-RD040	7294192	551 lbs. (250 kgs.) Weights, Set of 2 . . . . . Mounts Externally to Wheel	1102	1,791.00
325-RD041	7294200	551 lbs. (250 kgs.) Weights, Set of 4 . . . . . Mounts Externally to Wheel	2204	3,582.00
BELLY AND HITCH WEIGHTS				
245-YD001	7293374	1 Belly Weight - 584 lbs. (265 kgs.) . . . . . (For use **WITHOUT** Front 3-Point Hitch)	584	1,447.00
345-YB003*	7294270	1,875 lbs (850 kg) Monoblock Weight.		3,307.00
345-YB004*	7294271	3,307 lbs (1500 kg) Monoblock Weight		5,512.00
*Not Compatible with Front Weights				
ELECTRICAL				
215-CB002	Base	Engine Block Heater - 110 Volt		**In Base**
215-CB000	7293593	Less Engine Block Heater.		(207.00)
LIGHTING				
205-VF013	7293103	Dual Roof-Mounted Rotating Beacons, Left and Right . (Includes SAE SMV sign)		502.00
195-VG078	7295103	2 Xenon and 2 Single Bulb Front Worklights, ... 2 Xenon Rear Worklights		3,293.00

7700 LARGE FRAME PREMIUM EDITION

Mississippi State Contract Discount: 25%

(F.O.B. PORT OF ENTRY)

Order Code	Catalog Number	Description	Approx. Weight (lb.)	List Price
PIVOTING FRONT FENDERS				
155-WE110	Base	Pivoting Front Fenders - Standard Width . . . . . Width depends on tire selection; see Chart Below		**In Base**
155-WE111	7293598	Pivoting Front Fenders - Wide Width . . . . . Width depends on tire selection; see Chart Below		116.00

Fender Size		
Standard	**Wide**	**Tire Sizes**
12.6" (320 mm)	13.9" (355 mm)	320/85R34 (12.4R34) 320/85R38 (12.4R38)
14.9" (380 mm)	16.1" (410 mm)	380/85R30 (14.9R30) 380/85R34 (14.9R34) 400/80R28
16.1" (410 mm)	18.5" (470 mm)	420/85R28 (16.9R28) 420/85R30 (16.9R30) 420/90R30
18.5" (470 mm)	20.4" (520 mm)	480/70R30
20.4" (520 mm)	24.4" (620 mm)	540/65R28 540/65R30
24.4" (620 mm)	27.5" (700 mm)	600/65R28 710/55R30

REAR FENDERS				
255-WD012	Base	Rear Fenders without Extensions, 78.74"(2.00 M) . . .		**In Base**
255-WD017	7293107	Wide Fender -90.55" (2.3 M) with Rear Extension . . .		1,272.00
255-WD020	7293109	Extra Wide Fender -100.4" (2.55 M) . . . . . with Rear Extension		1,421.00

7700 LARGE FRAME PREMIUM EDITION

Mississippi State Contract Discount: 25%

MASSEY FERGUSON®

(F.O.B. PORT OF ENTRY)

Order Code	Catalog Number	Description	Approx. Weight (lb.)	List Price
MISCELLANEOUS				
35-EN001	7293092	Creeper Gear (4:1 Reduction). . . . . (**Available on Dyna-6 Editions Only)** (Not compatible with Loader Provision and/or Front Hitch)		2,297.00
250-GS001	7293100	Hydraulic Trailer Brakes		785.00
250-GS067	7293552	Pneumatic & Hydraulic		7,289.00
225-LQ001	7293553	Water Separator (Fuel Filter)		448.00
275-TC005	7294210	French Language OIB.		No Charge
275-TC011	7294211	Spanish Language OIB		No Charge

DEALER INSTALLED OPTIONS

FRONT WEIGHTS

BEAUVAIS BUILT

5020186M	8 x 55 kg. (121 lbs.) Front Weights	968	1,485.00
5020187M	10 x 55 kg. (121 lbs.) Front Weights	1210	1,857.00
5020188M	12 x 55 kg. (121 lbs.) Front Weights	1452	2,228.00
5020189M	14 x 55 kg. (121 lbs.) Front Weights	1694	2,600.00
5020190M	16 x 55 kg. (121 lbs.) Front Weights		

JACKSON BUILT

5020186JM	8 x 55 kg. (121 lbs.) Front Weights	968	1,485.00
5020187JM	10 x 55 kg. (121 lbs.) Front Weights	1210	1,857.00
5020188JM	12 x 55 kg. (121 lbs.) Front Weights	1452	2,228.00
5020189JM	14 x 55 kg. (121 lbs.) Front Weights	1694	2,600.00
5020190JM	16 x 55 kg (121 lbs.) Front Weights	1936	2,971.00

REAR WEIGHT PACKAGE

BEAUVAIS BUILT

5020202M	Additional Rear Wheel Weight Package - . . . . . set of 2 x 250kg (550 lbs) 250kg Weight Adapter for 10 Bolt Hub (order weights separately)		TBA

JACKSON BUILT

5020202JM	Additional Rear Wheel Weight Package - . . . . . set of 2 x 250kg (550 lbs) 250kg Weight Adapter for 10 Bolt Hub (order weights separately)		1,970.00

MASSEY FERGUSON®

MF8600 SERIES

MF 8600

Jackson Built

Possible Order Modifications in Weeks

	> 18	16 - 18	14 - 16	10 -14	6 - 10
Auto-Guide 3000	o	o	o	X	X
Front Axle/Rear Axle Type	o	0	X	X	X
Air Conditioning/Heater	o	o	X	X	X
Cab Audio	o	o	o	o	o
Front Fenders	o	o	o	o	o
Front Weights	o	o	o	o	o
Hydraulic/Pneumatic Trailer Brake	o	o	X	X	X
Hydraulic Remotes	o	o	o	X	X
Rear Fenders	o	o	o	X	X
Rear Linkage & PTO	o	o	X	X	X
Seat	o	o	o	X	X
Wheel & Tires	o	o	X	X	X
Working Lights & Mirrors	o	o	o	X	X

o = Components can be requested to be modified.
X = Components are frozen and cannot be modified.
*Dates subject to change without notice.

Guidelines for Availability and Order Changes

These charts list the possible change requests that can be made to the listed components through e-Ordering. The information provided is built off of the Scheduled Completion Date.

***Scheduled Completion Date; Not the Planned Available To Ship (PATS) Date**

Updates and Improvements

OCTOBER 2013

- Update of Jackson Built Modification Chart
- Correction of the follow tire basket codes: W1401 and W1399

AUGUST 2013

- Addition of Packages - Contains the most popular ordering options.
  Performance Bundle
  Luxury Bundle

MAY 2013

- The MF8600 feature Auto-Guide™ 3000, AGCO's new, fully integrated technology solution.
- AGCO POWER Tier 4 Interim engines have lower low idle and working idle RPMs, reducing fuel consumption and noise levels.
- Electric Adjustable Side Mirrors with Electric De-icing now standard equipment.
- Roof Mounted Rotating Beacons now standard equipment
-
-

Please refer to Bulletin MF13-10PMB "MF8600 Series Tractor Updates" for more information.

Serial Number Reference For Determining Model Year Code.

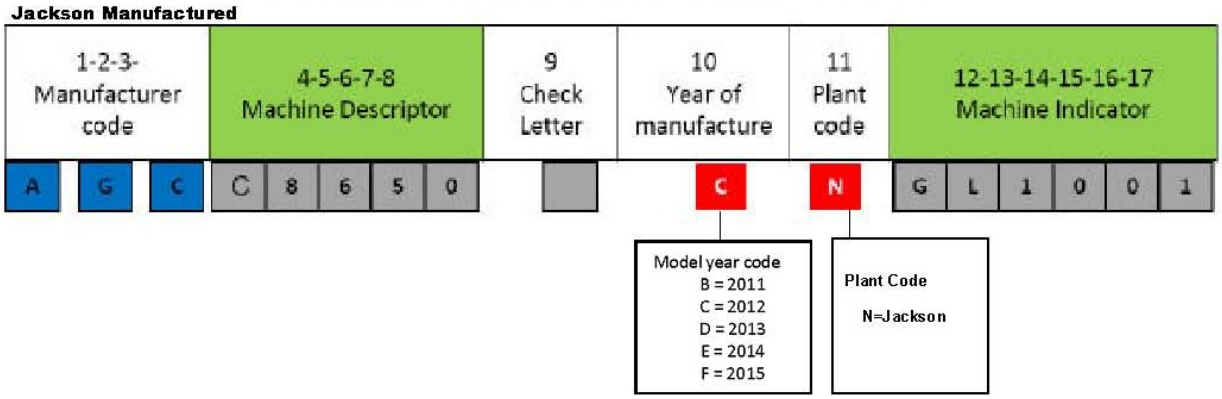

MF 8650

Mississippi State Contract Discount: 25%

STANDARD EQUIPMENT

F.O.B. PORT OF ENTRY

ENGINE
AGCO POWER 8.4L (514 cu in.) 6 Cylinder, Tier 4i Compliant
- 205 PTO HP (153 Kw) @ 2100 RPM
- 240 ISO Engine HP (177 Kw) @ 2100 RPM
- e3 SCR Technology
- Air-To-Air Aftercooled, Common Rail Injection, Turbocharged

Electronic Engine Management (EEM) with Dual ERPM Settings
Electronic Controlled Viscous Fan Drive
Dual Element Dry Type Air Cleaner
Vertical Exhaust at Right Front Cab Post
Cooling System: Antifreeze to Minus 30F (-34C)
Fuel Tank Capacity: 167 Gal (630L)
DEF Tank Capacity: 16 Gal (60L)

POWERTRAIN
Dyna-VT Transmission
- Continuously Variable Transmission to 25 MPH (40 KPH), 60 ft/h (18.2 meter/hour)
- Dynamic Tractor Management with Two Programmable Cruise Speeds

10” Multi-Disc Wet Brakes
- Electro Hydraulic Park Brake (Park Lock)
- High Pressure Power Assisted

Power Differential Lock
1000E/1000 RPM PTO, 1 ¾" 20 Spline Shaft
Rear Fender Mounted PTO Shut-Off
118" (2997mm) long, 4.33" (110mm) Diameter Rear Bar Axle

FRONT WHEEL ASSIST AXLE
Standard Duty Power Front Axle (PFA)
Shielded Center Drive Line with Electro-Hydraulic Control & Front Wheel Drive Differential Lock
55 Degree Steering Angle
SpeedSteer

HYDRAULICS
Closed Center 46 GPM (175 L/Min) Pump
2900 PSI (200 Bar) Maximum Pressure
4 Electro-Hydraulic Valves, 2 Fingertip Controlled, 2 Joystick Controlled, Flow And Timing Controlled Through Control Center Display (CCD)
Hydrostatic Power Steering

HITCH
3 Point Hitch: Category 3 Linkage with Cat 3/3N Quick Hitch
Drawbar: Category 3, Clevis and Drop Pin
Sway Block Stabilizers

ELECTRICAL SYSTEM
Two 120 Amp Alternators
Two 12 Volt Batteries, 775 CCA each (SAE)
7 Pin ASAE Rear Trailer Electrical Outlet
Electrical Isolator Switch and Jumpstart Point
Solar Panel Trickle Charger on Cab Roof
Automatic Battery Shutoff (30 Minutes)

LIGHTING
6 Front Hood Mounted Single Bulb Worklights
4 Headlights
4 Cab Mounted Double Bulb Worklights
Fold-Out Extremity Warning Lights
2 Roof Mounted Rotating Beacons

INSTRUMENTS
Control Center Display (CCD)
- Video Input
- Electric Valve Control
- ISOBUS Compliant

Tachometer: Digital and Analog
PTO Speed: Digital
Ground Speed Display: Digital
Fuel Level, DEF Level, and Coolant Temp Gauges
Warning/Information Lights

OPERATOR AREA
4 Post Panoramic Cab
Transmission Control T-Handle on Armrest
OptiRide Plus Cab Suspension
Adjustable Steering Column
Front Sun Visor
Air Conditioning and Heater
Air Suspended Seat - Automatic Adjustment
Front And Rear Windshield Wiper/Washer
Dual Large Telescoping Electric Adjustable Side Mirrors with Electric De-icing
Single Inside Rear View Mirror
4 Audio Speakers
Antenna And Wiring Harness for Radio (Less Radio)
2 – 3 Pin 12V Power Outlets
12V Cigarette Lighter Power Outlet
12V Single Pole Cigarette Style Power Outlet
ISO 11783 9-Pin in Cab Connector
ISO 11786 7-Pin in Cab Connector
Magnetic Ashtray

WHEELS AND TIRES
Rear 480/80R46 R1W Dual Wheels, Cast Inner/Steel Outer
Front 420/90R30 R1W Single Waffle Wheels

OTHER STANDARD FEATURES
Auto-Steer Complete: Auto-Guide™ 3000 Sub-Meter (WAAS and OmniStar VBS)
Auto Steering System using the Control Center Display (CCD)
AGCOMMAND Ready with Antenna, Bracket, and Harness (To Complete, See Technology Section)
Lockable Tool Box
SMV & SIS Sign
Molded Rear Fenders
Integrated Belly Weight 1800 lbs (820 Kg) with Front Weight Carrier
English Literature

SUBJECT TO AVAILABILITY

MF 8650

Mississippi State Contract Discount: 25%

MASSEY FERGUSON®

Order Code	Catalog Number	Description	Approx. Weight (lb.)	List Price
		BASE MACHINE		
MF8650	7294615	MF 8650 4WD Base Tractor		244,351.00
		PACKAGES		
315-MPP8001	7294252	Performance Bundle Includes:		20,926.00
		A7034 Dyna-VT Transmission - 31 mph (50 KPH) with Heavy Duty Suspended Front Axle		
		GP393 5 Spool Valves Electric - 3 fingertips and 2 Joystick		
		YM243 Category 3 Heavy Duty Drawbar and Clevis		
		CB002 Engine Block Heater		
		GK007 External Lift Control on Both Sides with Ext. Spool Valve Control		
		GR010 Power Beyond with P/T/LS/D couplers		
		LQ001 Water Separator (Fuel Filter)		
		LA036 540E/1000 RPM Flanged PTO, 6, 20 & 21 Spline		
320-MLP8001	7294254	Luxury Bundle Includes:		8,100.00
		AE065 Maximo Evolution Grammer Seat		
		AQ004 Automatic Climate Control		
		VG078 NightBlaze (Xenon) Cab Worklights - 2 Front & 2 Rear		
		VK004 Worklights on Handrails and Rear Fenders		
		5020418JM CD Player, Bluetooth, Radio with Antenna & Speakers (MP3 Compatible)		
		TRANSMISSION		
		Dyna-VT Transmission - 25 mph (40 KPH).		**In Base**
25-A7024	7294134	Dyna-VT Transmission- 31 mph (50 KPH) . . . . . with Standard Duty Suspended Front Axle		15,170.00
25-A7034	7294228*	Dyna-VT Transmission- 31 mph (50 KPH) . . . . . with Heavy Duty Suspended Front Axle		17,563.00

***Heavy Duty Fixed / Suspended Front Axles are not compatible with 28" and 30" Waffle Rims with 60" and 64" tread settings when ordering Pivoting Front Fenders.**

		CAB SUSPENSION		
		OptiRide Plus Suspension.		**In Base**
115-AM015	7294244	No Cab Suspension		(4,918.00)
		CAB SEAT		
		Grammar Air Suspended Seat with Armrest.		**In Base**
125-AE042	7294164	Superluxe Grammar Seat		1,497.00
125-AE065	7294235	Maximo Evolution Grammar Seat		2,754.00

SUBJECT TO AVAILABILITY

MF 8650

Mississippi State Contract Discount: 25%

Order Code	Catalog Number	Description	Approx. Weight (lb.)	List Price
		INSTRUMENT PANEL / CONTROL CENTER DISPLAY (CCD)		
	5020419JM	Control Center Display (CCD) with Radar, Video Input & ISOBUS, Auto-Guide™ 3000 Sub-Meter (WAAS and OmniStar VBS) Auto Steering System- **English Language**. Auto-Guide™ 3000 uses the Control Center Display (CCD).		**In Base**
	5020420JM	Control Center Display (CCD) with Radar, Video Input & ISOBUS, Auto-Guide™ 3000 Sub-Meter (WAAS and OmniStar VBS) Auto Steering System- **French Language**. Auto-Guide™ 3000 uses the Control Center Display (CCD).		No Charge
	5020421JM	Control Center Display (CCD) with Radar, Video Input, ISOBUS, and Auto Steering Ready. (Includes Roof Plate and Wiring Harness)		(4,828.00)
		FRONT AXLE		
		Standard Duty Fixed Front Axle		**In Base**
65-NA130	7294230*	Heavy Duty Fixed Front Axle.		2,393.00
65-NA032	7294145	Standard Duty Suspended Front Axle.		14,418.00
65-NA132	7294231*	Heavy Duty Suspended Front Axle		16,809.00

***Heavy Duty Fixed / Suspended Front Axles are not compatible with 28" and 30" Waffle Rims with 60" and 64" tread settings when ordering Pivoting Front Fenders.**

		HYDRAULIC VALVES - REQUIRED		
		4 Spool Valves Electric -2 fingertips, 2 Joystick		**In Base**
50-GP393	7294152	5 Spool Valves Electric-3 fingertips & 2 Joystick		1,743.00
50-GP395	7294153	6 Spool Valves Electric- 4 fingertips & 2 Joystick		3,488.00
		PTO- with In CAB Control		
		1000E/1000 RPM Flanged PTO, 20 spline		**In Base**
100-LA098	7294213	540E/1000 RPM Flanged PTO, 20 spline		No Charge
100-LA105◆	7294214	1000E/1000 RPM Flanged PTO, 20 & 21 spline		268.00
100-LA036◆	7294215	540E/1000 RPM Flanged PTO, 6, 20 & 21 spline		268.00

◆(Not offered with Factory Installed Cat 4 Drawbar. Order additional shafts from Parts)

SUBJECT TO AVAILABILITY

MF 8650

Mississippi State Contract Discount: 25%

MASSEY FERGUSON®

Order Code	Catalog Number	Description	Approx. Weight (lb.)	List Price
		TIRE BRAND SELECTION- REQUIRED		
70-Blank	7294212	Factory Brand Choice		No Charge
70-T0002	7294196	Goodyear Brand Required		1,124.00
70-T0007	7294197	Firestone Brand Required		1,124.00
70-T0010	7294198	Trelleborg Brand Required		1,124.00

Note: Tire brand subject to change without notice unless a Brand is specified in Segment 70.
Tire Brand Availability is listed after each tire size.

FRONT AND REAR TIRES - REQUIRED*

***11 weeks out for changes on Jackson Built Models**

Rear: Single Steel Welded Wheel
Front: Welded Wheel

75-W1585	7294857B1	R: 710/70R38 R1W (GY, FI, TR)	
	7294795B1	F: 600/65R28 R1W (GY, FI, TR)	(4,699.00)
75-W1587	7294859B1	R: 710/70R42 R1W (GY, TR)	
	7294796B1	F: 600/70R28 R1W (GY, TR)	(500.00)
75-W1525	7294859B1	R: 710/70R42 R1W (GY, FI, TR)	
	7294756B1	F: 480/70R34 R1W (GY, FI, TR)	(1,569.00)
75-W1561	7294878B1	R: 710/75R42 R1W (TR)	
	7294799B1	F: 600/65R34 R1W (TR)	2,424.00
75-W1739	7294878B1	R: 710/75R42 R1W (TR)	
	7294914B1	F: 650/60R34 R1W (TR)	2,728.00
75-W1714	7294881B1	R: 900/60R42 R1W (TR)	
	7294799B1	F: 600/65R34 R1W (TR)	6,609.00
75-W1743	7294881B1	R: 900/60R42 R1W (TR)	
	7294914B1	F: 650/60R34 R1W (TR)	6,913.00

SUBJECT TO AVAILABILITY

Order Code	Catalog Number	Description	Approx. Weight (lb.)	List Price
		FRONT AND REAR TIRES - REQUIRED - (Continued)		
		Rear: Dual Row Crop Single Cast **Front: Waffle Wheel**		
75-Base	7294864B1 7294750B1	D: 480/80R46 R1W (GY, FI) F: 420/90R30 R1W (GY, FI		**In Base**
75-W1391	7294863B1 7294750B1	D: 520/85R42 R1W (GY, FI) F: 420/90R30 R1W (GY, FI)		520.00
75-W1744	7294869B1 7294758B1	D: 380/90R54 R1W (GY, FI) F: 380/80R38 R1W (GY, FI)		1,394.00
75-W1526	7294867B1 7294755B1	D: 480/80R50 R1W (GY, FI) F: 420/85R34 R1W (GY, FI)		1,587.00
75-W1598	7294867B1 7294756B1	D: 480/80R50 R1W (GY, FI, TR) F: 480/70R34 R1W (GY, FI, TR)		2,716.00
75-W1722	7294867B1 7294758B1	D: 480/80R50 R1W (GY, FI) F: 380/80R38 R1W (GY, FI)		2,445.00
75-W1597	7294865B1 7294755B1	D: 520/85R46 R1W (GY, FI, TR) F: 420/85R34 R1W (GY, FI, TR)		2,048.00
75-W1418	7294865B1 7294756B1	D: 520/85R46 R1W (GY, FI, TR) F: 480/70R34 R1W (GY, FI, TR)		3,177.00
75-W1721	7294865B1 7294758B1	D: 520/85R46 R1W (GY, FI) F: 380/80R38 R1W (GY, FI)		2,906.00
75-W1404	7294868B1 7294757B1	D: 320/90R54 R1W (GY, FI) F: 320/85R38 R1W (GY, FI)		313.00
*75-W1401	7294864B1 7294754B1	D: 480/80R46 R1W (GY, FI, TR) F: 380/85R34 R1W (GY, FI, TR)		(240.00)
*75-W1399	7294863B1 7294754B1	D: 520/85R42 R1W (GY, FI, TR) F: 380/85R34 R1W (GY, FI, TR)		280.00
*75-W1596	7294863B1 7294749B1	D: 520/85R42 R1W (GY, FI, TR) F: 420/85R30 R1W (GY, FI, TR)		93.00

***Requires Dealer Installed Front Duals**

SUBJECT TO AVAILABILITY

MF 8650

Mississippi State Contract Discount: 25%

MASSEY FERGUSON®

Order Code	Catalog Number	Description	Approx. Weight (lb.)	List Price
		FACTORY INSTALLED OPTIONS		
		Operators Area		
120-AQ004	7294167	Automatic Climate Control		1,041.00
		Electrical		
195-VG078	7295103	NightBlaze (Xenon) Cab Worklights -2 Front & 2 Rear.		3,197.00
190-VK004	7294171	Worklights on Handrails and Rear Fenders		522.00
		Pivoting Adjustable Front Fenders		
155-WE110	7294204*	Standard Pivoting Front Fenders		1,585.00
155-WE111	7294205*	Wide Pivoting Front Fenders.		1,870.00
		***Heavy Duty Fixed / Suspended Front Axles are not compatible with 28" and 30" Waffle Rims with 60" and 64" tread settings when ordering Pivoting Front Fenders.**		
		Integrated Front Linkage System (IFLS)		
230-F1200	7294173	11000 lbs (5000 kg) Front Linkage Capacity. . . . . Double Acting Cylinders, Two Sets of Front Couplers. **Less Belly Weights** (Requires OptiRide Front Suspended Axle Standard or Reinforced)		10,611.00
230-F1201	7294245	11000 lbs (5000 kg) Front Linkage Capacity. . . . . Double Acting Cylinders, Two Sets of Front Couplers. **Includes Front Belly Weight (761 lbs, 345 kg)** (Requires OptiRide Front Suspended Axle Standard or Reinforced)		12,129.00
		Three Point Hitch		
		Cat 3 Fixed Top & Lower Links w/ Quick Hitch.		**In Base**
85-GC209	7294146	Cat 3 Fixed Top and Lower Links		(1,499.00)
		Drawbar		
		Category 3 Drawbar & Clevis		**In Base**
95-YM243	7294135	Category 3 Heavy Duty Drawbar & Clevis		590.00
95-YM246	7294136	Category 4 Drawbar & Clevis		867.00

SUBJECT TO AVAILABILITY

Order Code	Catalog Number	Description	Approx. Weight (lb.)	List Price
		FACTORY INSTALLED OPTIONS- Continued		
		Miscellaneous Options		
	5020417JM	Radio with Antenna and Speakers (MP3 Compatible) .		584.00
	5020418JM	CD Player, Bluetooth, Radio with Antenna & Speakers (MP3 Compatible)		794.00
215-CB002	7294181	Engine Block Heater		142.00
310-GK007	7294236	External Lift Control on Both Sides with External Spool Valve Control		27.00
90-GR010	7294226	Power Beyond with P/T/LS/D couplers		695.00
225-LQ001	7294191	Water Separator (Fuel Filter)		435.00
250-GS001	7294185	Hydraulic Trailer Brakes		1,006.00
250-GS067	7294187	Hydraulic & Pneumatic Trailer Brakes		7,583.00
275-TC005	7294210	French Language OIB and Decals		No Charge
		Factory Installed Weights		
285-YA057 4,326.00	7294209	Front Weights, 24 x 55 kg		2380
345-YB003	7294119	1873 lb (850 kg) Weight for 3-point Linkage		3,211.00
345-YB004	7294120	1873 lb (850 kg) & 1323 lb (600 kg) Weight for 3-point Linkage		5,351.00
325-RD040	7294192	Rear Wheel Weights, 2 x 250 kg		1,739.00
325-RD041	7294200	Rear Wheel Weights, 4 x 250 kg		3,478.00
		Rear Fender Options		
		2.00M (78.75") Wide Rear Fenders		**In Base**
255-WD220	7294237	2.00M (78.75") with 100mm (4") Side Ext.		1,235.00
255-WD229	7294238	2.00M (78.75") with 145mm (5.75") Side Ext.		1,336.00
255-WD234	7294239	2.00M (78.75") with 170mm (6.5") Side Ext.		1,470.00

SUBJECT TO AVAILABILITY

Order Code	Catalog Number	Description	Approx. Weight (lb.)	List Price
		DEALER INSTALLED WEIGHTS		
	5020186JM	Front Weight Package, 8 x 55 kg (121 lbs.)	968	1,442.00
	5020187JM	Front Weight Package, 10 x 55 kg (121 lbs.)	1210	1,803.00
	5020188JM	Front Weight Package, 12 x 55 kg (121 lbs.)	1452	2,163.00
	5020189JM	Front Weight Package, 14 x 55 kg (121 lbs.)	1694	2,524.00
	5020190JM	Front Weight Package, 16 x 55 kg (121 lbs.)	1936	2,884.00
	5020191JM	Front Weight Package, 18 x 55 kg (121 lbs.)	2178	3,245.00
	5020192JM	Front Weight Package, 24 x 55 kg (121 lbs.)	2904	4,326.00
	5020200JM	Rear Wheel Weights, 2 x 250 kg (551 lbs.). . . . . Mounts to One Side of Steel Rim		1,913.00
	5020201JM	Rear Wheel Weights, 4 x 250 kg (551 lbs.). . . . . Mounts to Each Side of the Steel Rim		3,825.00
	5020202JM	Rear Wheel Weights, 2 x 250 kg (551 lbs.). . . . . Mounts to Cast Center or Another 250 kg Weight		1,913.00
		DEALER INSTALLED FRONT OUTER TIRE and WHEELS		
It is required that T0002 -- Goodyear Brand, T0007 -- Firestone, T0010 -- Trelleborg, be ordered for the factory to guarantee the correct tire brand is supplied on the tractor.				
	5020381JM	380/80R38 R1W Firestone Radial (142A8/142B). . . . . All Traction DT		6,756.00
	5020396JM	380/80R38 R1W Goodyear DT800 (142A8/142B)		6,615.00
	5020378JM	420/85R34 R1W Firestone Radial (147A/147B). . . . . All Traction DT		6,703.00
	5020393JM	420/85R34 R1W Goodyear Super Traction Radial. . . . (147A8/147B)		6,822.00
	5020414JM	420/85R34 R1W Trelleborg TM600 (142A8/139B). . . .		6,561.00
	5020399JM	420/90R30 R1W Goodyear DT800 (147A8/147B)		5,942.00
	5020405JM	420/90R30 R1W Firestone Radial All (145A8/145B) . . Traction DT		6,014.00
	5020408JM	480/70R34 R1W Firestone Radial 9000 (155A8/155B)		7,194.00
	5020402JM	480/70R34 R1W Goodyear DT812 (146A8/146B)		6,539.00
	5020411JM	480/70R34 R1W Trelleborg TM700 (143A8/143B). . . .		6,539.00
	5020375JM	380/85R34 R1 Firestone Radial (137A8/137B) . . . . . All Traction DT		5,699.00
	5020390JM	380/85R34 R1W Goodyear DT800 (137A/137B)		6,397.00
	5020384JM	420/85R30 R1W Goodyear Super Traction Radial. . . . (144A/144B)		5,678.00
	5020372JM	380/85R34 R1W Trelleborg TM600 (137A8/137B). . . .		6,956.00
	5020366JM	420/85R30 R1W Trelleborg TM600 (140A8/137B) . . .		5,517.00
		Spacer Kits are Required to Install Front Outers		
	72517923JM	15.5” Spacer Kit (To achieve 120" tread setting). . . .		1,652.00
	72517922JM	22.0” Spacer Kit		2,313.00
		Rear Dual Spacers – Optional		
	72517687JM	9” Spacer Kit for 10 Bolt Hub and Steel Center Rims		2,517.00

SUBJECT TO AVAILABILITY

MF 8660

MASSEY FERGUSON®

Mississippi State Contract Discount: 25%

STANDARD EQUIPMENT

F.O.B. PORT OF ENTRY

ENGINE
AGCO POWER 8.4L (514 cu in.) 6 Cylinder, Tier 4i Compliant
- 225 PTO HP (168 Kw) @ 2100 RPM
- 265 ISO Engine HP (198 Kw) @ 2100 RPM
- e3 SCR Technology
- Air-To-Air Aftercooled, Common Rail Injection, Turbocharged

Electronic Engine Management (EEM) with Dual ERPM Settings
Electronic Controlled Viscous Fan Drive
Dual Element Dry Type Air Cleaner
Vertical Exhaust at Right Front Cab Post
Cooling System: Antifreeze to Minus 30F (-34C)
Fuel Tank Capacity: 167 Gal (630L)
DEF Tank Capacity: 16 Gal (60L)

POWERTRAIN
Dyna-VT Transmission
- Continuously Variable Transmission to 25 MPH (40 KPH), 60 ft/h (18.2 meter/hour)
- Dynamic Tractor Management with Two Programmable Cruise Speeds

10” Multi-Disc Wet Brakes
- Electro Hydraulic Park Brake (Park Lock)
- High Pressure Power Assisted

Power Differential Lock
1000E/1000 RPM PTO, 1 ¾" 20 Spline Shaft
Rear Fender Mounted PTO Shut-Off
118" (2997mm) long, 4.33" (110mm) Diameter Rear Bar Axle

FRONT WHEEL ASSIST AXLE
Standard Duty Power Front Axle (PFA)
Shielded Center Drive Line with Electro-Hydraulic Control & Front Wheel Drive Differential Lock
55 Degree Steering Angle
SpeedSteer

HYDRAULICS
Closed Center 46 GPM (175 L/Min) Pump
2900 PSI (200 Bar) Maximum Pressure
4 Electro-Hydraulic Valves, 2 Fingertip Controlled, 2 Joystick Controlled, Flow And Timing Controlled Through Control Center Display (CCD)
Hydrostatic Power Steering

HITCH
3 Point Hitch: Category 3 Linkage with Cat 3/3N Quick Hitch
Drawbar: Category 3, Clevis and Drop Pin
Sway Block Stabilizers

ELECTRICAL SYSTEM
Two 120 Amp Alternators
Two 12 Volt Batteries, 775 CCA each (SAE)
7 Pin ASAE Rear Trailer Electrical Outlet
Electrical Isolator Switch and Jumpstart Point
Solar Panel Trickle Charger on Cab Roof
Automatic Battery Shutoff (30 Minutes)

LIGHTING
6 Front Hood Mounted Single Bulb Worklights
4 Headlights
4 Cab Mounted Double Bulb Worklights
Fold-Out Extremity Warning Lights
2 Roof Mounted Rotating Beacons

INSTRUMENTS
Control Center Display (CCD)
- Video Input
- Electric Valve Control
- ISOBUS Compliant

Tachometer: Digital and Analog
PTO Speed: Digital
Ground Speed Display: Digital
Fuel Level, DEF Level, and Coolant Temp Gauges
Warning/Information Lights

OPERATOR AREA
4 Post Panoramic Cab
Transmission Control T-Handle on Armrest
OptiRide Plus Cab Suspension
Adjustable Steering Column
Front Sun Visor
Air Conditioning and Heater
Air Suspended Seat - Automatic Adjustment
Front And Rear Windshield Wiper/Washer
Dual Large Telescoping Electric Adjustable Side Mirrors with Electric De-icing
Single Inside Rear View Mirror
4 Audio Speakers
Antenna And Wiring Harness for Radio (Less Radio)
2 – 3 Pin 12V Power Outlets
12V Cigarette Lighter Power Outlet
12V Single Pole Cigarette Style Power Outlet
ISO 11783 9-Pin in Cab Connector
ISO 11786 7-Pin in Cab Connector
Magnetic Ashtray

WHEELS AND TIRES
Rear 480/80R46 R1W Dual Wheels, Cast Inner/Steel Outer
Front 420/90R30 R1W Single Waffle Wheels

OTHER STANDARD FEATURES
Auto-Steer Complete: Auto-Guide™ 3000 Sub-Meter (WAAS and OmniStar VBS)
Auto Steering System using the Control Center Display (CCD)
AGCOMMAND Ready with Antenna, Bracket, and Harness (To Complete, See Technology Section)
Lockable Tool Box
SMV & SIS Sign
Molded Rear Fenders
Integrated Belly Weight 1800 lbs (820 Kg) with Front Weight Carrier
English Literature

SUBJECT TO AVAILABILITY

MF 8660

Mississippi State Contract Discount: 25%

MASSEY FERGUSON®

Order Code	Catalog Number	Description	Approx. Weight (lb.)	List Price
		BASE MACHINE		
MF8660	7294616	MF 8660 4WD Base Tractor		260,044.00
		PACKAGES		
315-MPP8001	7294252	Performance Bundle Includes:		20,926.00
		A7034 Dyna-VT Transmission - 31 mph (50 KPH) with Heavy Duty Suspended Front Axle		
		GP393 5 Spool Valves Electric - 3 fingertips and 2 Joystick		
		YM243 Category 3 Heavy Duty Drawbar and Clevis		
		CB002 Engine Block Heater		
		GK007 External Lift Control on Both Sides with Ext. Spool Valve Control		
		GR010 Power Beyond with P/T/LS/D couplers		
		LQ001 Water Separator (Fuel Filter)		
		LA036 540E/1000 RPM Flanged PTO, 6, 20 & 21 Spline		
320-MLP8001	7294254	Luxury Bundle Includes:		8,100.00
		AE065 Maximo Evolution Grammer Seat		
		AQ004 Automatic Climate Control		
		VG078 NightBlaze (Xenon) Cab Worklights - 2 Front & 2 Rear		
		VK004 Worklights on Handrails and Rear Fenders		
		5020418JM CD Player, Bluetooth, Radio with Antenna & Speakers (MP3 Compatible)		
		TRANSMISSION		
		Dyna-VT Transmission - 25 mph (40 KPH).		**In Base**
25-A7024	7294134	Dyna-VT Transmission- 31 mph (50 KPH) . . . . . with Standard Duty Suspended Front Axle		15,170.00
25-A7034	7294228*	Dyna-VT Transmission- 31 mph (50 KPH) . . . . . with Heavy Duty Suspended Front Axle		17,563.00

***Heavy Duty Fixed / Suspended Front Axles are not compatible with 28" and 30" Waffle Rims with 60" and 64" tread settings when ordering Pivoting Front Fenders.**

		CAB SUSPENSION		
		OptiRide Plus Suspension.		**In Base**
115-AM015	7294244	No Cab Suspension		(4,918.00)
		CAB SEAT		
		Grammar Air Suspended Seat with Armrest.		**In Base**
125-AE042	7294164	Superluxe Grammar Seat		1,497.00
125-AE065	7294235	Maximo Evolution Grammar Seat		2,754.00

SUBJECT TO AVAILABILITY

Order Code	Catalog Number	Description	Approx. Weight (lb.)	List Price
		INSTRUMENT PANEL / CONTROL CENTER DISPLAY (CCD)		
	5020419JM	Control Center Display (CCD) with Radar, Video Input & ISOBUS, Auto-Guide™ 3000 Sub-Meter (WAAS and OmniStar VBS) Auto Steering System- **English Language**. Auto-Guide™ 3000 uses the Control Center Display (CCD).		**In Base**
	5020420JM	Control Center Display (CCD) with Radar, Video Input & ISOBUS, Auto-Guide™ 3000 Sub-Meter (WAAS and OmniStar VBS) Auto Steering System- **French Language**. Auto-Guide™ 3000 uses the Control Center Display (CCD).		No Charge
	5020421JM	Control Center Display (CCD) with Radar, Video Input, ISOBUS, and Auto Steering Ready. (Includes Roof Plate and Wiring Harness)		(4,828.00)
		FRONT AXLE		
		Standard Duty Fixed Front Axle		**In Base**
65-NA130	7294230*	Heavy Duty Fixed Front Axle.		2,393.00
65-NA032	7294145	Standard Duty Suspended Front Axle.		14,418.00
65-NA132	7294231*	Heavy Duty Suspended Front Axle		16,809.00

***Heavy Duty Fixed / Suspended Front Axles are not compatible with 28" and 30" Waffle Rims with 60" and 64" tread settings when ordering Pivoting Front Fenders.**

		HYDRAULIC VALVES - REQUIRED		
		4 Spool Valves Electric -2 fingertips, 2 Joystick		**In Base**
50-GP393	7294152	5 Spool Valves Electric-3 fingertips & 2 Joystick		1,743.00
50-GP395	7294153	6 Spool Valves Electric- 4 fingertips & 2 Joystick		3,488.00
		PTO- with In CAB Control		
		1000E/1000 RPM Flanged PTO, 20 spline.		**In Base**
100-LA098	7294213	540E/1000 RPM Flanged PTO, 20 spline.		No Charge
100-LA105◆	7294214	1000E/1000 RPM Flanged PTO, 20 & 21 spline		268.00
100-LA036◆	7294215	540E/1000 RPM Flanged PTO, 6, 20 & 21 spline		268.00

◆(Not offered with Factory Installed Cat 4 Drawbar. Order additional shafts from Parts)

SUBJECT TO AVAILABILITY

MF 8660

Mississippi State Contract Discount: 25%

MASSEY FERGUSON®

Order Code	Catalog Number	Description	Approx. Weight (lb.)	List Price
		TIRE BRAND SELECTION- REQUIRED		
70-Blank	7294212	Factory Brand Choice		No Charge
70-T0002	7294196	Goodyear Brand Required		1,124.00
70-T0007	7294197	Firestone Brand Required		1,124.00
70-T0010	7294198	Trelleborg Brand Required		1,124.00

Note: Tire brand subject to change without notice unless a Brand is specified in Segment 70.
Tire Brand Availability is listed after each tire size.

FRONT AND REAR TIRES - REQUIRED*

***11 weeks out for changes on Jackson Built Models**

Rear: Single Steel Welded Wheel
Front: Welded Wheel

75-W1585	7294857B1	R: 710/70R38 R1W (GY, FI, TR)	
	7294795B1	F: 600/65R28 R1W (GY, FI, TR)	(4,699.00)
75-W1587	7294859B1	R: 710/70R42 R1W (GY, TR)	
	7294796B1	F: 600/70R28 R1W (GY, TR)	(500.00)
75-W1525	7294859B1	R: 710/70R42 R1W (GY, FI, TR)	
	7294756B1	F: 480/70R34 R1W (GY, FI, TR)	(1,569.00)
75-W1561	7294878B1	R: 710/75R42 R1W (TR)	
	7294799B1	F: 600/65R34 R1W (TR)	2,424.00
75-W1739	7294878B1	R: 710/75R42 R1W (TR)	
	7294914B1	F: 650/60R34 R1W (TR)	2,728.00
75-W1714	7294881B1	R: 900/60R42 R1W (TR)	
	7294799B1	F: 600/65R34 R1W (TR)	6,609.00
75-W1743	7294881B1	R: 900/60R42 R1W (TR)	
	7294914B1	F: 650/60R34 R1W (TR)	6,913.00

SUBJECT TO AVAILABILITY

Order Code	Catalog Number	Description	Approx. Weight (lb.)	List Price
		FRONT AND REAR TIRES - REQUIRED - (Continued)		
		Rear: Dual Row Crop Single Cast **Front: Waffle Wheel**		
75-Base	7294864B1	D: 480/80R46 R1W (GY, FI)		
	7294750B1	F: 420/90R30 R1W (GY, FI		**In Base**
75-W1391	7294863B1	D: 520/85R42 R1W (GY, FI)		
	7294750B1	F: 420/90R30 R1W (GY, FI)		520.00
75-W1744	7294869B1	D: 380/90R54 R1W (GY, FI)		
	7294758B1	F: 380/80R38 R1W (GY, FI)		1,394.00
75-W1526	7294867B1	D: 480/80R50 R1W (GY, FI)		
	7294755B1	F: 420/85R34 R1W (GY, FI)		1,587.00
75-W1598	7294867B1	D: 480/80R50 R1W (GY, FI, TR)		
	7294756B1	F: 480/70R34 R1W (GY, FI, TR)		2,716.00
75-W1722	7294867B1	D: 480/80R50 R1W (GY, FI)		
	7294758B1	F: 380/80R38 R1W (GY, FI)		2,445.00
75-W1597	7294865B1	D: 520/85R46 R1W (GY, FI, TR)		
	7294755B1	F: 420/85R34 R1W (GY, FI, TR)		2,048.00
75-W1418	7294865B1	D: 520/85R46 R1W (GY, FI, TR)		
	7294756B1	F: 480/70R34 R1W (GY, FI, TR)		3,177.00
75-W1721	7294865B1	D: 520/85R46 R1W (GY, FI)		
	7294758B1	F: 380/80R38 R1W (GY, FI)		2,906.00
75-W1404	7294868B1	D: 320/90R54 R1W (GY, FI)		
	7294757B1	F: 320/85R38 R1W (GY, FI)		313.00
*75-W1401	7294864B1	D: 480/80R46 R1W (GY, FI, TR)		
	7294754B1	F: 380/85R34 R1W (GY, FI, TR)		(240.00)
*75-W1399	7294863B1	D: 520/85R42 R1W (GY, FI, TR)		
	7294754B1	F: 380/85R34 R1W (GY, FI, TR)		280.00
*75-W1596	7294863B1	D: 520/85R42 R1W (GY, FI, TR)		
	7294749B1	F: 420/85R30 R1W (GY, FI, TR)		93.00

***Requires Dealer Installed Front Duals**

SUBJECT TO AVAILABILITY

MF 8660

Mississippi State Contract Discount: 25%

MASSEY FERGUSON®

Order Code	Catalog Number	Description	Approx. Weight (lb.)	List Price
		FACTORY INSTALLED OPTIONS		
		Operators Area		
120-AQ004	7294167	Automatic Climate Control		1,041.00
		Electrical		
195-VG078	7295103	NightBlaze (Xenon) Cab Worklights- 2 Front & 2 Rear.		3,197.00
190-VK004	7294171	Worklights on Handrails and Rear Fenders		522.00
		Pivoting Adjustable Front Fenders		
155-WE110	7294204*	Standard Pivoting Front Fenders		1,585.00
155-WE111	7294205*	Wide Pivoting Front Fenders.		1,870.00

***Heavy Duty Fixed / Suspended Front Axles are not compatible with 28" and 30" Waffle Rims with 60" and 64" tread settings when ordering Pivoting Front Fenders.**

		Integrated Front Linkage System (IFLS)		
230-F1200	7294173	11000 lbs (5000 kg) Front Linkage Capacity. . . . . . Double Acting Cylinders, Two Sets of Front Couplers. **Less Belly Weights** (Requires OptiRide Front Suspended Axle Standard or Reinforced)		10,611.00
230-F1201	7294245	11000 lbs (5000 kg) Front Linkage Capacity. . . . . . Double Acting Cylinders, Two Sets of Front Couplers. **Includes Front Belly Weight (761 lbs, 345 kg)** (Requires OptiRide Front Suspended Axle Standard or Reinforced)		12,129.00
		Three Point Hitch		
		Cat 3 Fixed Top & Lower Links w/ Quick Hitch.		**In Base**
85-GC209	7294146	Cat 3 Fixed Top and Lower Links		(1,499.00)
		Drawbar		
		Category 3 Drawbar & Clevis		**In Base**
95-YM243	7294135	Category 3 Heavy Duty Drawbar & Clevis		590.00
95-YM246	7294136	Category 4 Drawbar & Clevis		867.00

SUBJECT TO AVAILABILITY

Order Code	Catalog Number	Description	Approx. Weight (lb.)	List Price
		FACTORY INSTALLED OPTIONS- Continued		
		Miscellaneous Options		
	5020417JM	Radio with Antenna and Speakers (MP3 Compatible) .		584.00
	5020418JM	CD Player, Bluetooth, Radio with Antenna & Speakers (MP3 Compatible)		794.00
215-CB002	7294181	Engine Block Heater		142.00
310-GK007	7294236	External Lift Control on Both Sides with External Spool Valve Control		27.00
90-GR010	7294226	Power Beyond with P/T/LS/D couplers		695.00
225-LQ001	7294191	Water Separator (Fuel Filter)		435.00
250-GS001	7294185	Hydraulic Trailer Brakes		1,006.00
250-GS067	7294187	Hydraulic & Pneumatic Trailer Brakes		7,583.00
275-TC005	7294210	French Language OIB and Decals		No Charge
		Factory Installed Weights		
285-YA057 4,326.00	7294209	Front Weights, 24 x 55 kg		2380
345-YB003	7294119	1873 lb (850 kg) Weight for 3-point Linkage		3,211.00
345-YB004	7294120	1873 lb (850 kg) & 1323 lb (600 kg) Weight for 3-point Linkage		5,351.00
325-RD040	7294192	Rear Wheel Weights, 2 x 250 kg		1,739.00
325-RD041	7294200	Rear Wheel Weights, 4 x 250 kg		3,478.00
		Rear Fender Options		
		2.00M (78.75") Wide Rear Fenders		**In Base**
255-WD220	7294237	2.00M (78.75") with 100mm (4") Side Ext.		1,235.00
255-WD229	7294238	2.00M (78.75") with 145mm (5.75") Side Ext.		1,336.00
255-WD234	7294239	2.00M (78.75") with 170mm (6.5") Side Ext.		1,470.00

SUBJECT TO AVAILABILITY

Order Code	Catalog Number	Description	Approx. Weight (lb.)	List Price
		DEALER INSTALLED WEIGHTS		
	5020186JM	Front Weight Package, 8 x 55 kg (121 lbs.)	968	1,442.00
	5020187JM	Front Weight Package, 10 x 55 kg (121 lbs.)	1210	1,803.00
	5020188JM	Front Weight Package, 12 x 55 kg (121 lbs.)	1452	2,163.00
	5020189JM	Front Weight Package, 14 x 55 kg (121 lbs.)	1694	2,524.00
	5020190JM	Front Weight Package, 16 x 55 kg (121 lbs.)	1936	2,884.00
	5020191JM	Front Weight Package, 18 x 55 kg (121 lbs.)	2178	3,245.00
	5020192JM	Front Weight Package, 24 x 55 kg (121 lbs.)	2904	4,326.00
	5020200JM	Rear Wheel Weights, 2 x 250 kg (551 lbs.). Mounts to One Side of Steel Rim		1,913.00
	5020201JM	Rear Wheel Weights, 4 x 250 kg (551 lbs.). Mounts to Each Side of the Steel Rim		3,825.00
	5020202JM	Rear Wheel Weights, 2 x 250 kg (551 lbs.). Mounts to Cast Center or Another 250 kg Weight		1,913.00
		DEALER INSTALLED FRONT OUTER TIRE and WHEELS		

It is required that T0002 -- Goodyear Brand, T0007 -- Firestone, T0010 -- Trelleborg, be ordered for the factory to guarantee the correct tire brand is supplied on the tractor.

	5020381JM	380/80R38 R1W Firestone Radial (142A8/142B) All Traction DT		6,756.00
	5020396JM	380/80R38 R1W Goodyear DT800 (142A8/142B)		6,615.00
	5020378JM	420/85R34 R1W Firestone Radial (147A/147B) All Traction DT		6,703.00
	5020393JM	420/85R34 R1W Goodyear Super Traction Radial (147A8/147B)		6,822.00
	5020414JM	420/85R34 R1W Trelleborg TM600 (142A8/139B)		6,561.00
	5020399JM	420/90R30 R1W Goodyear DT800 (147A8/147B)		5,942.00
	5020405JM	420/90R30 R1W Firestone Radial All (145A8/145B) Traction DT		6,014.00
	5020408JM	480/70R34 R1W Firestone Radial 9000 (155A8/155B)		7,194.00
	5020402JM	480/70R34 R1W Goodyear DT812 (146A8/146B)		6,539.00
	5020411JM	480/70R34 R1W Trelleborg TM700 (143A8/143B)		6,539.00
	5020375JM	380/85R34 R1 Firestone Radial (137A8/137B) All Traction DT		5,699.00
	5020390JM	380/85R34 R1W Goodyear DT800 (137A/137B)		6,397.00
	5020384JM	420/85R30 R1W Goodyear Super Traction Radial (144A/144B)		5,678.00
	5020372JM	380/85R34 R1W Trelleborg TM600 (137A8/137B)		6,956.00
	5020366JM	420/85R30 R1W Trelleborg TM600 (140A8/137B)		5,517.00
		Spacer Kits are Required to Install Front Outers		
	72517923JM	15.5” Spacer Kit (To achieve 120" tread setting)		1,652.00
	72517922JM	22.0” Spacer Kit		2,313.00
		Rear Dual Spacers – Optional		
	72517687JM	9” Spacer Kit for 10 Bolt Hub and Steel Center Rims		2,517.00

SUBJECT TO AVAILABILITY

MF 8670

Mississippi State Contract Discount: 25%

STANDARD EQUIPMENT

F.O.B. PORT OF ENTRY

ENGINE
AGCO POWER 8.4L (514 cu in.) 6 Cylinder, Tier 4i Compliant
- 250 PTO HP (186 Kw) @ 2100 RPM
- 290 ISO Engine HP (216 Kw) @ 2100 RPM
- e3 SCR Technology
- Air-To-Air Aftercooled, Common Rail Injection, Turbocharged

Electronic Engine Management (EEM) with Dual ERPM Settings
Electronic Controlled Viscous Fan Drive
Dual Element Dry Type Air Cleaner
Vertical Exhaust at Right Front Cab Post
Cooling System: Antifreeze to Minus 30F (-34C)
Fuel Tank Capacity: 167 Gal (630L)
DEF Tank Capacity: 16 Gal (60L)

POWERTRAIN
Dyna-VT Transmission
- Continuously Variable Transmission to 25 MPH (40 KPH), 60 ft/h (18.2 meter/hour)
- Dynamic Tractor Management with Two Programmable Cruise Speeds

10” Multi-Disc Wet Brakes
- Electro Hydraulic Park Brake (Park Lock)
- High Pressure Power Assisted

Power Differential Lock
1000E/1000 RPM PTO, 1 ¾" 20 Spline Shaft
Rear Fender Mounted PTO Shut-Off
118" (2997mm) long, 4.33" (110mm) Diameter Rear Bar Axle

FRONT WHEEL ASSIST AXLE
Standard Duty Power Front Axle (PFA)
Shielded Center Drive Line with Electro-Hydraulic Control & Front Wheel Drive Differential Lock
55 Degree Steering Angle
SpeedSteer

HYDRAULICS
Closed Center 46 GPM (175 L/Min) Pump
2900 PSI (200 Bar) Maximum Pressure
4 Electro-Hydraulic Valves, 2 Fingertip Controlled, 2 Joystick Controlled, Flow And Timing Controlled Through Control Center Display (CCD)
Hydrostatic Power Steering

HITCH
3 Point Hitch: Category 3 Linkage with Cat 3/3N Quick Hitch
Drawbar: Category 3, Clevis and Drop Pin
Sway Block Stabilizers

ELECTRICAL SYSTEM
Two 120 Amp Alternators
Two 12 Volt Batteries, 775 CCA each (SAE)
7 Pin ASAE Rear Trailer Electrical Outlet
Electrical Isolator Switch and Jumpstart Point
Solar Panel Trickle Charger on Cab Roof
Automatic Battery Shutoff (30 Minutes)

LIGHTING
6 Front Hood Mounted Single Bulb Worklights
4 Headlights
4 Cab Mounted Double Bulb Worklights
Fold-Out Extremity Warning Lights
2 Roof Mounted Rotating Beacons

INSTRUMENTS
Control Center Display (CCD)
- Video Input
- Electric Valve Control
- ISOBUS Compliant

Tachometer: Digital and Analog
PTO Speed: Digital
Ground Speed Display: Digital
Fuel Level, DEF Level, and Coolant Temp Gauges
Warning/Information Lights

OPERATOR AREA
4 Post Panoramic Cab
Transmission Control T-Handle on Armrest
OptiRide Plus Cab Suspension
Adjustable Steering Column
Front Sun Visor
Air Conditioning and Heater
Air Suspended Seat - Automatic Adjustment
Front And Rear Windshield Wiper/Washer
Dual Large Telescoping Electric Adjustable Side Mirrors with Electric De-icing
Single Inside Rear View Mirror
4 Audio Speakers
Antenna And Wiring Harness for Radio (Less Radio)
2 – 3 Pin 12V Power Outlets
12V Cigarette Lighter Power Outlet
12V Single Pole Cigarette Style Power Outlet
ISO 11783 9-Pin in Cab Connector
ISO 11786 7-Pin in Cab Connector
Magnetic Ashtray

WHEELS AND TIRES
Rear 480/80R50 R1W Dual Wheels, Cast Inner/Steel Outer
Front 420/85R34 R1W Single Waffle Wheels

OTHER STANDARD FEATURES
Auto-Steer Complete: Auto-Guide™ 3000 Sub-Meter (WAAS and OmniStar VBS)
Auto Steering System using the Control Center Display (CCD)
AGCOMMAND Ready with Antenna, Bracket, and Harness (To Complete, See Technology Section)
Lockable Tool Box
SMV & SIS Sign
Molded Rear Fenders
Integrated Belly Weight 1800 lbs (820 Kg) with Front Weight Carrier
English Literature

SUBJECT TO AVAILABILITY

MF 8670

Mississippi State Contract Discount: 25%

MASSEY FERGUSON®

Order Code	Catalog Number	Description	Approx. Weight (lb.)	List Price
		BASE MACHINE		
MF8670	7294617	MF 8670 4WD Base Tractor		281,715.00
		PACKAGES		
315-MPP8001	7294252	Performance Bundle Includes:		20,926.00
		A7034 Dyna-VT Transmission - 31 mph (50 KPH) with Heavy Duty Suspended Front Axle		
		GP393 5 Spool Valves Electric - 3 fingertips and 2 Joystick		
		YM243 Category 3 Heavy Duty Drawbar and Clevis		
		CB002 Engine Block Heater		
		GK007 External Lift Control on Both Sides with Ext. Spool Valve Control		
		GR010 Power Beyond with P/T/LS/D couplers		
		LQ001 Water Separator (Fuel Filter)		
		LA036 540E/1000 RPM Flanged PTO, 6, 20 & 21 Spline		
320-MLP8001	7294254	Luxury Bundle Includes:		8,100.00
		AE065 Maximo Evolution Grammer Seat		
		AQ004 Automatic Climate Control		
		VG078 NightBlaze (Xenon) Cab Worklights - 2 Front & 2 Rear		
		VK004 Worklights on Handrails and Rear Fenders		
		5020418JM CD Player, Bluetooth, Radio with Antenna & Speakers (MP3 Compatible)		
		TRANSMISSION		
		Dyna-VT Transmission - 25 mph (40 KPH).		**In Base**
25-A7024	7294134	Dyna-VT Transmission- 31 mph (50 KPH) . . . . . with Standard Duty Suspended Front Axle		15,170.00
25-A7034	7294228*	Dyna-VT Transmission- 31 mph (50 KPH) . . . . . with Heavy Duty Suspended Front Axle		17,563.00

***Heavy Duty Fixed / Suspended Front Axles are not compatible with 28" and 30" Waffle Rims with 60" and 64" tread settings when ordering Pivoting Front Fenders.**

		CAB SUSPENSION		
		OptiRide Plus Suspension.		**In Base**
115-AM015	7294244	No Cab Suspension		(4,918.00)
		CAB SEAT		
		Grammar Air Suspended Seat with Armrest.		**In Base**
125-AE042	7294164	Superluxe Grammar Seat		1,497.00
125-AE065	7294235	Maximo Evolution Grammar Seat		2,754.00

SUBJECT TO AVAILABILITY

MF 8670

Mississippi State Contract Discount: 25%

Order Code	Catalog Number	Description	Approx. Weight (lb.)	List Price
		INSTRUMENT PANEL / CONTROL CENTER DISPLAY (CCD)		
	5020419JM	Control Center Display (CCD) with Radar, Video Input & ISOBUS, Auto-Guide™ 3000 Sub-Meter (WAAS and OmniStar VBS) Auto Steering System- **English Language**. Auto-Guide™ 3000 uses the Control Center Display (CCD).		**In Base**
	5020420JM	Control Center Display (CCD) with Radar, Video Input & ISOBUS, Auto-Guide™ 3000 Sub-Meter (WAAS and OmniStar VBS) Auto Steering System- **French Language**. Auto-Guide™ 3000 uses the Control Center Display (CCD).		No Charge
	5020421JM	Control Center Display (CCD) with Radar, Video Input, ISOBUS, and Auto Steering Ready. (Includes Roof Plate and Wiring Harness)		(4,828.00)
		FRONT AXLE		
		Standard Duty Fixed Front Axle		**In Base**
65-NA130	7294230*	Heavy Duty Fixed Front Axle.		2,393.00
65-NA032	7294145	Standard Duty Suspended Front Axle.		14,418.00
65-NA132	7294231*	Heavy Duty Suspended Front Axle		16,809.00

***Heavy Duty Fixed / Suspended Front Axles are not compatible with 28" and 30" Waffle Rims with 60" and 64" tread settings when ordering Pivoting Front Fenders.**

		HYDRAULIC VALVES - REQUIRED		
		4 Spool Valves Electric -2 fingertips, 2 Joystick		**In Base**
50-GP393	7294152	5 Spool Valves Electric-3 fingertips & 2 Joystick		1,743.00
50-GP395	7294153	6 Spool Valves Electric- 4 fingertips & 2 Joystick		3,488.00
		PTO- with In CAB Control		
		1000E/1000 RPM Flanged PTO, 20 spline.		**In Base**
100-LA098	7294213	540E/1000 RPM Flanged PTO, 20 spline.		No Charge
100-LA105◆	7294214	1000E/1000 RPM Flanged PTO, 20 & 21 spline		268.00
100-LA036◆	7294215	540E/1000 RPM Flanged PTO, 6, 20 & 21 spline		268.00

◆(Not offered with Factory Installed Cat 4 Drawbar. Order additional shafts from Parts)

SUBJECT TO AVAILABILITY

MF 8670

Mississippi State Contract Discount: 25%

MASSEY FERGUSON®

Order Code	Catalog Number	Description	Approx. Weight (lb.)	List Price
		TIRE BRAND SELECTION- REQUIRED		
70-Blank	7294212	Factory Brand Choice		No Charge
70-T0002	7294196	Goodyear Brand Required		1,124.00
70-T0007	7294197	Firestone Brand Required		1,124.00
70-T0010	7294198	Trelleborg Brand Required		1,124.00

Note: Tire brand subject to change without notice unless a Brand is specified in Segment 70.
Tire Brand Availability is listed after each tire size.

FRONT AND REAR TIRES - REQUIRED*

***11 weeks out for changes on Jackson Built Models**

Rear: Single Steel Welded Wheel
Front: Welded Wheel

75-W1585	7294857	R: 710/70R38 R1W (GY, FI, TR)	
	7294795	F: 600/65R28 R1W (GY, FI, TR)	(6,286.00)
75-W1587	7294859	R: 710/70R42 R1W (GY, TR)	
	7294796	F: 600/70R28 R1W (GY, TR)	(2,087.00)
75-W1525	7294859	R: 710/70R42 R1W (GY, FI, TR)	
	7294756	F: 480/70R34 R1W (GY, FI, TR)	(3,156.00)
75-W1561	7294878	R: 710/75R42 R1W (TR)	
	7294799	F: 600/65R34 R1W (TR)	837.00
75-W1739	7294878	R: 710/75R42 R1W (TR)	
	7294914	F: 650/60R34 R1W (TR)	1,141.00
75-W1714	7294881	R: 900/60R42 R1W (TR)	
	7294799	F: 600/65R34 R1W (TR)	5,022.00
75-W1743	7294881	R: 900/60R42 R1W (TR)	
	7294914	F: 650/60R34 R1W (TR)	5,326.00

SUBJECT TO AVAILABILITY

Order Code	Catalog Number	Description	Approx. Weight (lb.)	List Price
		FRONT AND REAR TIRES - REQUIRED - (Continued)		
		Rear: Dual Row Crop Single Cast **Front: Waffle Wheel**		
75-Base	7294867 7294755	D: 480/80R50 R1W (GY, FI, TR) F: 420/85R34 R1W (GY, FI, TR)		**In Base**
75-W1414	7294864 7294750	D: 480/80R46 R1W (GY, FI) F: 420/90R30 R1W (GY, FI		(1,587.00)
75-W1391	7294863 7294750	D: 520/85R42 R1W (GY, FI) F: 420/90R30 R1W (GY, FI)		(1,067.00)
75-W1744	7294869 7294758	D: 380/90R54 R1W (GY, FI) F: 380/80R38 R1W (GY, FI)		(193.00)
75-W1598	7294867 7294756	D: 480/80R50 R1W (GY, FI, TR) F: 480/70R34 R1W (GY, FI, TR)		1,129.00
75-W1722	7294867 7294758	D: 480/80R50 R1W (GY, FI) F: 380/80R38 R1W (GY, FI)		858.00
75-W1597	7294865 7294755	D: 520/85R46 R1W (GY, FI, TR) F: 420/85R34 R1W (GY, FI, TR)		461.00
75-W1418	7294865 7294756	D: 520/85R46 R1W (GY, FI, TR) F: 480/70R34 R1W (GY, FI, TR)		1,590.00
75-W1721	7294865 7294758	D: 520/85R46 R1W (GY, FI) F: 380/80R38 R1W (GY, FI)		1,319.00
75-W1404	7294868 7294757	D: 320/90R54 R1W (GY, FI) F: 320/85R38 R1W (GY, FI)		(1,275.00)
*75-W1401	7294864 7294754	D: 480/80R46 R1W (GY, FI, TR) F: 380/85R34 R1W (GY, FI, TR)		(1,827.00)
*75-W1399	7294863 7294754	D: 520/85R42 R1W (GY, FI, TR) F: 380/85R34 R1W (GY, FI, TR)		(1,307.00)
*75-W1596	7294863 7294749	D: 520/85R42 R1W (GY, FI, TR) F: 420/85R30 R1W (GY, FI, TR)		(2,746.00)

***Requires Dealer Installed Front Duals**

SUBJECT TO AVAILABILITY

MF 8670

Mississippi State Contract Discount: 25%

MASSEY FERGUSON®

Order Code	Catalog Number	Description	Approx. Weight (lb.)	List Price
		FACTORY INSTALLED OPTIONS		
		Operators Area		
120-AQ004	7294167	Automatic Climate Control		1,041.00
		Electrical		
195-VG078	7295103	NightBlaze (Xenon) Cab Worklights - 2 Front & 2 Rear		3,197.00
190-VK004	7294171	Worklights on Handrails and Rear Fenders		522.00
		Pivoting Adjustable Front Fenders		
155-WE110	7294204*	Standard Pivoting Front Fenders		1,585.00
155-WE111	7294205*	Wide Pivoting Front Fenders.		1,870.00

***Heavy Duty Fixed / Suspended Front Axles are not compatible with 28" and 30" Waffle Rims with 60" and 64" tread settings when ordering Pivoting Front Fenders.**

		Integrated Front Linkage System (IFLS)		
230-F1200	7294173	11000 lbs (5000 kg) Front Linkage Capacity. . . . . . Double Acting Cylinders, Two Sets of Front Couplers. **Less Belly Weights** (Requires OptiRide Front Suspended Axle Standard or Reinforced)		10,611.00
230-F1201	7294245	11000 lbs (5000 kg) Front Linkage Capacity. . . . . . Double Acting Cylinders, Two Sets of Front Couplers. **Includes Front Belly Weight (761 lbs, 345 kg)** (Requires OptiRide Front Suspended Axle Standard or Reinforced)		12,129.00
		Three Point Hitch		
		Cat 3 Fixed Top & Lower Links w/ Quick Hitch.		**In Base**
85-GC209	7294146	Cat 3 Fixed Top and Lower Links		(1,499.00)
		Drawbar		
		Category 3 Drawbar & Clevis		**In Base**
95-YM243	7294135	Category 3 Heavy Duty Drawbar & Clevis		590.00
95-YM246	7294136	Category 4 Drawbar & Clevis		867.00

SUBJECT TO AVAILABILITY

Order Code	Catalog Number	Description	Approx. Weight (lb.)	List Price
		FACTORY INSTALLED OPTIONS- Continued		
		Miscellaneous Options		
	5020417JM	Radio with Antenna and Speakers (MP3 Compatible) .		584.00
	5020418JM	CD Player, Bluetooth, Radio with Antenna & Speakers (MP3 Compatible)		794.00
215-CB002	7294181	Engine Block Heater		142.00
310-GK007	7294236	External Lift Control on Both Sides with External Spool Valve Control		27.00
90-GR010	7294226	Power Beyond with P/T/LS/D couplers		695.00
225-LQ001	7294191	Water Separator (Fuel Filter)		435.00
250-GS001	7294185	Hydraulic Trailer Brakes		1,006.00
250-GS067	7294187	Hydraulic & Pneumatic Trailer Brakes		7,583.00
275-TC005	7294210	French Language OIB and Decals		No Charge
		Factory Installed Weights		
285-YA057 4,326.00	7294209	Front Weights, 24 x 55 kg		2380
345-YB003	7294119	1873 lb (850 kg) Weight for 3-point Linkage		3,211.00
345-YB004	7294120	1873 lb (850 kg) & 1323 lb (600 kg) Weight for 3-point Linkage		5,351.00
325-RD040	7294192	Rear Wheel Weights, 2 x 250 kg		1,739.00
325-RD041	7294200	Rear Wheel Weights, 4 x 250 kg		3,478.00
		Rear Fender Options		
		2.00M (78.75") Wide Rear Fenders		**In Base**
255-WD220	7294237	2.00M (78.75") with 100mm (4") Side Ext.		1,235.00
255-WD229	7294238	2.00M (78.75") with 145mm (5.75") Side Ext.		1,336.00
255-WD234	7294239	2.00M (78.75") with 170mm (6.5") Side Ext.		1,470.00

SUBJECT TO AVAILABILITY

Order Code	Catalog Number	Description	Approx. Weight (lb.)	List Price
		DEALER INSTALLED WEIGHTS		
	5020186JM	Front Weight Package, 8 x 55 kg (121 lbs.)	968	1,442.00
	5020187JM	Front Weight Package, 10 x 55 kg (121 lbs.)	1210	1,803.00
	5020188JM	Front Weight Package, 12 x 55 kg (121 lbs.)	1452	2,163.00
	5020189JM	Front Weight Package, 14 x 55 kg (121 lbs.)	1694	2,524.00
	5020190JM	Front Weight Package, 16 x 55 kg (121 lbs.)	1936	2,884.00
	5020191JM	Front Weight Package, 18 x 55 kg (121 lbs.)	2178	3,245.00
	5020192JM	Front Weight Package, 24 x 55 kg (121 lbs.)	2904	4,326.00
	5020200JM	Rear Wheel Weights, 2 x 250 kg (551 lbs.). Mounts to One Side of Steel Rim		1,913.00
	5020201JM	Rear Wheel Weights, 4 x 250 kg (551 lbs.). Mounts to Each Side of the Steel Rim		3,825.00
	5020202JM	Rear Wheel Weights, 2 x 250 kg (551 lbs.). Mounts to Cast Center or Another 250 kg Weight		1,913.00
		DEALER INSTALLED FRONT OUTER TIRE and WHEELS		

It is required that T0002 -- Goodyear Brand, T0007 -- Firestone, T0010 -- Trelleborg, be ordered for the factory to guarantee the correct tire brand is supplied on the tractor.

	5020381JM	380/80R38 R1W Firestone Radial (142A8/142B) All Traction DT		6,756.00
	5020396JM	380/80R38 R1W Goodyear DT800 (142A8/142B)		6,615.00
	5020378JM	420/85R34 R1W Firestone Radial (147A/147B) All Traction DT		6,703.00
	5020393JM	420/85R34 R1W Goodyear Super Traction Radial (147A8/147B)		6,822.00
	5020414JM	420/85R34 R1W Trelleborg TM600 (142A8/139B)		6,561.00
	5020399JM	420/90R30 R1W Goodyear DT800 (147A8/147B)		5,942.00
	5020405JM	420/90R30 R1W Firestone Radial All (145A8/145B) Traction DT		6,014.00
	5020408JM	480/70R34 R1W Firestone Radial 9000 (155A8/155B)		7,194.00
	5020402JM	480/70R34 R1W Goodyear DT812 (146A8/146B)		6,539.00
	5020411JM	480/70R34 R1W Trelleborg TM700 (143A8/143B)		6,539.00
	5020375JM	380/85R34 R1 Firestone Radial (137A8/137B) All Traction DT		5,699.00
	5020390JM	380/85R34 R1W Goodyear DT800 (137A/137B)		6,397.00
	5020384JM	420/85R30 R1W Goodyear Super Traction Radial (144A/144B)		5,678.00
	5020372JM	380/85R34 R1W Trelleborg TM600 (137A8/137B)		6,956.00
	5020366JM	420/85R30 R1W Trelleborg TM600 (140A8/137B)		5,517.00
		Spacer Kits are Required to Install Front Outers		
	72517923JM	15.5” Spacer Kit (To achieve 120" tread setting)		1,652.00
	72517922JM	22.0” Spacer Kit		2,313.00
		Rear Dual Spacers – Optional		
	72517687JM	9” Spacer Kit for 10 Bolt Hub and Steel Center Rims		2,517.00

SUBJECT TO AVAILABILITY

MF 8680

Mississippi State Contract Discount: 25%

STANDARD EQUIPMENT

F.O.B. PORT OF ENTRY

ENGINE
AGCO POWER 8.4L (514 cu in.) 6 Cylinder, Tier 4i Compliant
- 275 PTO HP (205 Kw) @ 2100 RPM
- 320 ISO Engine HP (239 Kw) @ 2100 RPM
- e3 SCR Technology
- Air-To-Air Aftercooled, Common Rail Injection, Turbocharged

Electronic Engine Management (EEM) with Dual ERPM Settings
Electronic Controlled Viscous Fan Drive
Dual Element Dry Type Air Cleaner
Vertical Exhaust at Right Front Cab Post
Cooling System: Antifreeze to Minus 30F (-34C)
Fuel Tank Capacity: 167 Gal (630L)
DEF Tank Capacity: 16 Gal (60L)

POWERTRAIN
Dyna-VT Transmission
- Continuously Variable Transmission to 25 MPH (40 KPH), 60 ft/h (18.2 meter/hour)
- Dynamic Tractor Management with Two Programmable Cruise Speeds

10” Multi-Disc Wet Brakes
- Electro Hydraulic Park Brake (Park Lock)
- High Pressure Power Assisted

Power Differential Lock
1000E/1000 RPM PTO, 1 ¾" 20 Spline Shaft
Rear Fender Mounted PTO Shut-Off
118" (2997mm) long, 4.33" (110mm) Diameter Rear Bar Axle

FRONT WHEEL ASSIST AXLE
Heavy Duty Power Front Axle (PFA)
Shielded Center Drive Line with Electro-Hydraulic Control & Front Wheel Drive Differential Lock
55 Degree Steering Angle
SpeedSteer

HYDRAULICS
Closed Center 46 GPM (175 L/Min) Pump
2900 PSI (200 Bar) Maximum Pressure
4 Electro-Hydraulic Valves, 2 Fingertip Controlled, 2 Joystick Controlled, Flow And Timing Controlled Through Control Center Display (CCD)
Hydrostatic Power Steering

HITCH
3 Point Hitch: Category 3 Linkage with Cat 3/3N Quick Hitch
Drawbar: Category 3, Clevis and Drop Pin
Sway Block Stabilizers

ELECTRICAL SYSTEM
Two 120 Amp Alternators
Two 12 Volt Batteries, 775 CCA each (SAE)7 Pin ASAE Rear Trailer Electrical Outlet
Electrical Isolator Switch and Jumpstart Point
Solar Panel Trickle Charger on Cab Roof
Automatic Battery Shutoff (30 Minutes)

LIGHTING
6 Front Hood Mounted Single Bulb Worklights
4 Headlights
4 Cab Mounted Double Bulb Worklights
Fold-Out Extremity Warning Lights
2 Roof Mounted Rotating Beacons

INSTRUMENTS
Control Center Display (CCD)
- Video Input
- Electric Valve Control
- ISOBUS Compliant

Tachometer: Digital and Analog
PTO Speed: Digital
Ground Speed Display: Digital
Fuel Level, DEF Level, and Coolant Temp Gauges
Warning/Information Lights

OPERATOR AREA
4 Post Panoramic Cab
Transmission Control T-Handle on Armrest
OptiRide Plus Cab Suspension
Adjustable Steering Column
Front Sun Visor
Air Conditioning and Heater
Air Suspended Seat - Automatic Adjustment
Front And Rear Windshield Wiper/Washer
Dual Large Telescoping Electric Adjustable Side Mirrors with Electric De-icing
Single Inside Rear View Mirror
4 Audio Speakers
Antenna And Wiring Harness for Radio (Less Radio)
2 – 3 Pin 12V Power Outlets
12V Cigarette Lighter Power Outlet
12V Single Pole Cigarette Style Power Outlet
ISO 11783 9-Pin in Cab Connector
ISO 11786 7-Pin in Cab Connector
Magnetic Ashtray

WHEELS AND TIRES
Rear 480/80R50 R1W Dual Wheels, Cast Inner/Steel Outer
Front 420/85R34 R1W Single Waffle Wheels

OTHER STANDARD FEATURES
Auto-Steer Complete: Auto-Guide™ 3000 Sub-Meter (WAAS and OmniStar VBS)
Auto Steering System using the Control Center Display (CCD)
AGCOMMAND Ready with Antenna, Bracket, and Harness (To Complete, See Technology Section)
Lockable Tool Box
SMV & SIS Sign
Molded Rear Fenders
Integrated Belly Weight 1800 lbs (820 Kg) with Front Weight Carrier
English Literature

SUBJECT TO AVAILABILITY

MF 8680

Mississippi State Contract Discount: 25%

MASSEY FERGUSON®

Order Code	Catalog Number	Description	Approx. Weight (lb.)	List Price
		BASE MACHINE		
MF8680	7294618	MF 8680 4WD Base Tractor		305,852.00
		PACKAGES		
315-MPP8001	7294253	Performance Bundle Includes:		18,593.00
		A7034 Dyna-VT Transmission- 31 mph (50 KPH) with Heavy Duty Suspended Front Axle		
		GP393 5 Spool Valves Electric - 3 fingertips and 2 Joystick		
		YM243 Category 3 Heavy Duty Drawbar and Clevis		
		CB002 Engine Block Heater		
		GK007 External Lift Control on Both Sides with External Spool Valve Control		
		GR010 Power Beyond with P/T/LS/D couplers		
		LQ001 Water Separator (Fuel Filter)		
		LA036 540E/1000 RPM Flanged PTO, 6, 20 & 21 Spline		
320-MLP8001	7294254	Luxury Bundle Includes:		8,100.00
		AE065 Maximo Evolution Grammer Seat		
		AQ004 Automatic Climate Control		
		VG078 NightBlaze (Xenon) Cab Worklights - 2 Front & 2 Rear		
		VK004 Worklights on Handrails and Rear Fenders		
		5020418JM CD Player, Bluetooth, Radio with Antenna & Speakers (MP3 Compatible)		
		TRANSMISSION		
		Dyna-VT Transmission - 25 mph (40 KPH).		**In Base**
25-A7034	7294229*	Dyna-VT Transmission- 31 mph (50 KPH) . . . . . with Heavy Duty Suspended Front Axle		15,170.00

***Heavy Duty Fixed / Suspended Front Axles are not compatible with 28" and 30" Waffle Rims with 60" and 64" tread settings when ordering Pivoting Front Fenders.**

		CAB SUSPENSION		
		OptiRide Plus Suspension.		**In Base**
115-AM015	7294244	No Cab Suspension		(4,918.00)
		CAB SEAT		
		Grammar Air Suspended Seat with Armrest.		**In Base**
125-AE042	7294164	Superluxe Grammar Seat		1,497.00
125-AE065	7294235	Maximo Evolution Grammar Seat		2,754.00

SUBJECT TO AVAILABILITY

Order Code	Catalog Number	Description	Approx. Weight (lb.)	List Price
		INSTRUMENT PANEL / CONTROL CENTER DISPLAY (CCD)		
	5020419JM	Control Center Display (CCD) with Radar, Video Input & ISOBUS, Auto-Guide™ 3000 Sub-Meter (WAAS and OmniStar VBS) Auto Steering System- **English Language**. Auto-Guide™ 3000 uses the Control Center Display (CCD).		**In Base**
	5020420JM	Control Center Display (CCD) with Radar, Video Input & ISOBUS, Auto-Guide™ 3000 Sub-Meter (WAAS and OmniStar VBS) Auto Steering System- **French Language**. Auto-Guide™ 3000 uses the Control Center Display (CCD).		No Charge
	5020421JM	Control Center Display (CCD) with Radar, Video Input, ISOBUS, and Auto Steering Ready. (Includes Roof Plate and Wiring Harness)		(4,828.00)
		FRONT AXLE		
		Heavy Duty Fixed Front Axle.		**In Base**
65-NA132	7294232*	Heavy Duty Suspended Front Axle		14,418.00

***Heavy Duty Fixed / Suspended Front Axles are not compatible with 28" and 30" Waffle Rims with 60" and 64" tread settings when ordering Pivoting Front Fenders.**

		HYDRAULIC VALVES - REQUIRED		
		4 Spool Valves Electric -2 fingertips, 2 Joystick		**In Base**
50-GP393	7294152	5 Spool Valves Electric-3 fingertips & 2 Joystick		1,743.00
50-GP395	7294153	6 Spool Valves Electric- 4 fingertips & 2 Joystick		3,488.00
		PTO- with In CAB Control		
		1000E/1000 RPM Flanged PTO, 20 spline		**In Base**
100-LA098	7294213	540E/1000 RPM Flanged PTO, 20 spline		No Charge
100-LA105◆	7294214	1000E/1000 RPM Flanged PTO, 20 & 21 spline		268.00
100-LA036◆	7294215	540E/1000 RPM Flanged PTO, 6, 20 & 21 spline		268.00

◆(Not offered with Factory Installed Cat 4 Drawbar. Order additional shafts from Parts)

SUBJECT TO AVAILABILITY

MF 8680

Mississippi State Contract Discount: 25%

MASSEY FERGUSON®

Order Code	Catalog Number	Description	Approx. Weight (lb.)	List Price
		TIRE BRAND SELECTION- REQUIRED		
70-Blank	7294212	Factory Brand Choice		No Charge
70-T0002	7294196	Goodyear Brand Required		1,124.00
70-T0007	7294197	Firestone Brand Required		1,124.00
70-T0010	7294198	Trelleborg Brand Required		1,124.00

Note: Tire brand subject to change without notice unless a Brand is specified in Segment 70.
Tire Brand Availability is listed after each tire size.

FRONT AND REAR TIRES - REQUIRED*

***11 weeks out for changes on Jackson Built Models**

Rear: Single Steel Welded Wheel
Front: Welded Wheel

75-W1585	7294857	R: 710/70R38 R1W (GY, FI, TR)		
	7294795	F: 600/65R28 R1W (GY, FI, TR)		(6,286.00)
75-W1587	7294859	R: 710/70R42 R1W (GY, TR)		
	7294796	F: 600/70R28 R1W (GY, TR)		(2,087.00)
75-W1525	7294859	R: 710/70R42 R1W (GY, FI, TR)		
	7294756	F: 480/70R34 R1W (GY, FI, TR)		(3,156.00)
75-W1561	7294878	R: 710/75R42 R1W (TR)		
	7294799	F: 600/65R34 R1W (TR)		837.00
75-W1739	7294878	R: 710/75R42 R1W (TR)		
	7294914	F: 650/60R34 R1W (TR)		1,141.00
75-W1714	7294881	R: 900/60R42 R1W (TR)		
	7294799	F: 600/65R34 R1W (TR)		5,022.00
75-W1743	7294881	R: 900/60R42 R1W (TR)		
	7294914	F: 650/60R34 R1W (TR)		5,326.00

SUBJECT TO AVAILABILITY

Order Code	Catalog Number	Description	Approx. Weight (lb.)	List Price
		FRONT AND REAR TIRES - REQUIRED - (Continued)		
		Rear: Dual Row Crop Single Cast **Front: Waffle Wheel**		
75-Base	7294867	D: 480/80R50 R1W (GY, FI, TR)		
	7294755	F: 420/85R34 R1W (GY, FI, TR)		**In Base**
75-W1414	7294864	D: 480/80R46 R1W (GY, FI)		
	7294750	F: 420/90R30 R1W (GY, FI		(1,587.00)
75-W1391	7294863	D: 520/85R42 R1W (GY, FI)		
	7294750	F: 420/90R30 R1W (GY, FI).		(1,067.00)
75-W1744	7294869	D: 380/90R54 R1W (GY, FI)		
	7294758	F: 380/80R38 R1W (GY, FI).		(193.00)
75-W1598	7294867	D: 480/80R50 R1W (GY, FI, TR)		
	7294756	F: 480/70R34 R1W (GY, FI, TR)		1,129.00
75-W1722	7294867	D: 480/80R50 R1W (GY, FI)		
	7294758	F: 380/80R38 R1W (GY, FI).		858.00
75-W1597	7294865	D: 520/85R46 R1W (GY, FI, TR)		
	7294755	F: 420/85R34 R1W (GY, FI, TR)		461.00
75-W1418	7294865	D: 520/85R46 R1W (GY, FI, TR)		
	7294756	F: 480/70R34 R1W (GY, FI, TR)		1,590.00
75-W1721	7294865	D: 520/85R46 R1W (GY, FI)		
	7294758	F: 380/80R38 R1W (GY, FI)		1,319.00
75-W1404	7294868	D: 320/90R54 R1W (GY, FI)		
	7294757	F: 320/85R38 R1W (GY, FI).		(1,275.00)

SUBJECT TO AVAILABILITY

MF 8680

Mississippi State Contract Discount: 25%

MASSEY FERGUSON®

Order Code	Catalog Number	Description	Approx. Weight (lb.)	List Price
		FACTORY INSTALLED OPTIONS		
		Operators Area		
120-AQ004	7294167	Automatic Climate Control		1,041.00
		Electrical		
195-VG078	7295103	NightBlaze (Xenon) Cab Worklights - 2 Front & 2 Rear		3,197.00
190-VK004	7294171	Worklights on Handrails and Rear Fenders		522.00
		Pivoting Adjustable Front Fenders		
155-WE110	7294204*	Standard Pivoting Front Fenders		1,585.00
155-WE111	7294205*	Wide Pivoting Front Fenders.		1,870.00
		***Heavy Duty Fixed / Suspended Front Axles are not compatible with 28" and 30" Waffle Rims with 60" and 64" tread settings when ordering Pivoting Front Fenders.**		
		Integrated Front Linkage System (IFLS)		
230-F1200	7294173	11000 lbs (5000 kg) Front Linkage Capacity. . . . . Double Acting Cylinders, Two Sets of Front Couplers. **Less Belly Weights** (Requires OptiRide Front Suspended Axle Standard or Reinforced)		10,611.00
230-F1201	7294245	11000 lbs (5000 kg) Front Linkage Capacity. . . . . Double Acting Cylinders, Two Sets of Front Couplers. **Includes Front Belly Weight (761 lbs, 345 kg)** (Requires OptiRide Front Suspended Axle Standard or Reinforced)		12,129.00
		Three Point Hitch		
		Cat 3 Fixed Top & Lower Links w/ Quick Hitch.		**In Base**
85-GC209	7294146	Cat 3 Fixed Top and Lower Links		(1,499.00)
		Drawbar		
		Category 3 Drawbar & Clevis		**In Base**
95-YM243	7294135	Category 3 Heavy Duty Drawbar & Clevis		590.00
95-YM246	7294136	Category 4 Drawbar & Clevis		867.00

SUBJECT TO AVAILABILITY

MF 8680

Mississippi State Contract Discount: 25%

Order Code	Catalog Number	Description	Approx. Weight (lb.)	List Price
		FACTORY INSTALLED OPTIONS- Continued		
		Miscellaneous Options		
	5020417JM	Radio with Antenna and Speakers (MP3 Compatible) .		584.00
	5020418JM	CD Player, Bluetooth, Radio with Antenna & Speakers (MP3 Compatible)		794.00
215-CB002	7294181	Engine Block Heater		142.00
310-GK007	7294236	External Lift Control on Both Sides with External Spool Valve Control		27.00
90-GR010	7294226	Power Beyond with P/T/LS/D couplers		695.00
225-LQ001	7294191	Water Separator (Fuel Filter)		435.00
250-GS001	7294185	Hydraulic Trailer Brakes		1,006.00
250-GS067	7294187	Hydraulic & Pneumatic Trailer Brakes		7,583.00
275-TC005	7294210	French Language OIB and Decals		No Charge
		Factory Installed Weights		
285-YA057 4,326.00	7294209	Front Weights, 24 x 55 kg		2380
345-YB003	7294119	1873 lb (850 kg) Weight for 3-point Linkage		3,211.00
345-YB004	7294120	1873 lb (850 kg) & 1323 lb (600 kg) Weight for 3-point Linkage		5,351.00
325-RD040	7294192	Rear Wheel Weights, 2 x 250 kg		1,739.00
325-RD041	7294200	Rear Wheel Weights, 4 x 250 kg		3,478.00
		Rear Fender Options		
		2.00M (78.75") Wide Rear Fenders		**In Base**
255-WD220	7294237	2.00M (78.75") with 100mm (4") Side Ext.		1,235.00
255-WD229	7294238	2.00M (78.75") with 145mm (5.75") Side Ext.		1,336.00
255-WD234	7294239	2.00M (78.75") with 170mm (6.5") Side Ext.		1,470.00

SUBJECT TO AVAILABILITY

Order Code	Catalog Number	Description	Approx. Weight (lb.)	List Price
		DEALER INSTALLED WEIGHTS		
	5020186JM	Front Weight Package, 8 x 55 kg (121 lbs.)	968	1,442.00
	5020187JM	Front Weight Package, 10 x 55 kg (121 lbs.)	1210	1,803.00
	5020188JM	Front Weight Package, 12 x 55 kg (121 lbs.)	1452	2,163.00
	5020189JM	Front Weight Package, 14 x 55 kg (121 lbs.)	1694	2,524.00
	5020190JM	Front Weight Package, 16 x 55 kg (121 lbs.)	1936	2,884.00
	5020191JM	Front Weight Package, 18 x 55 kg (121 lbs.)	2178	3,245.00
	5020192JM	Front Weight Package, 24 x 55 kg (121 lbs.)	2904	4,326.00
	5020200JM	Rear Wheel Weights, 2 x 250 kg (551 lbs.). Mounts to One Side of Steel Rim		1,913.00
	5020201JM	Rear Wheel Weights, 4 x 250 kg (551 lbs.). Mounts to Each Side of the Steel Rim		3,825.00
	5020202JM	Rear Wheel Weights, 2 x 250 kg (551 lbs.). Mounts to Cast Center or Another 250 kg Weight		1,913.00
		DEALER INSTALLED FRONT OUTER TIRE and WHEELS		

It is required that T0002 -- Goodyear Brand, T0007 -- Firestone, T0010 -- Trelleborg, be ordered for the factory to guarantee the correct tire brand is supplied on the tractor.

	5020381JM	380/80R38 R1W Firestone Radial (142A8/142B) All Traction DT		6,756.00
	5020396JM	380/80R38 R1W Goodyear DT800 (142A8/142B)		6,615.00
	5020378JM	420/85R34 R1W Firestone Radial (147A/147B) All Traction DT		6,703.00
	5020393JM	420/85R34 R1W Goodyear Super Traction Radial (147A8/147B)		6,822.00
	5020414JM	420/85R34 R1W Trelleborg TM600 (142A8/139B)		6,561.00
	5020399JM	420/90R30 R1W Goodyear DT800 (147A8/147B)		5,942.00
	5020405JM	420/90R30 R1W Firestone Radial All (145A8/145B) Traction DT		6,014.00
	5020408JM	480/70R34 R1W Firestone Radial 9000 (155A8/155B)		7,194.00
	5020402JM	480/70R34 R1W Goodyear DT812 (146A8/146B)		6,539.00
	5020411JM	480/70R34 R1W Trelleborg TM700 (143A8/143B)		6,539.00
	5020375JM	380/85R34 R1 Firestone Radial (137A8/137B) All Traction DT		5,699.00
	5020390JM	380/85R34 R1W Goodyear DT800 (137A/137B)		6,397.00
	5020384JM	420/85R30 R1W Goodyear Super Traction Radial (144A/144B)		5,678.00
	5020372JM	380/85R34 R1W Trelleborg TM600 (137A8/137B)		6,956.00
	5020366JM	420/85R30 R1W Trelleborg TM600 (140A8/137B)		5,517.00
		Spacer Kits are Required to Install Front Outers		
	72517923JM	15.5” Spacer Kit (To achieve 120" tread setting)		1,652.00
	72517922JM	22.0” Spacer Kit		2,313.00
		Rear Dual Spacers – Optional		
	72517687JM	9” Spacer Kit for 10 Bolt Hub and Steel Center Rims		2,517.00

SUBJECT TO AVAILABILITY

MF 8690

Mississippi State Contract Discount: 25%

STANDARD EQUIPMENT

F.O.B. PORT OF ENTRY

ENGINE
AGCO POWER 8.4L (514 cu in.) 6 Cylinder, Tier 4i Compliant
- 290 PTO HP (216 Kw) @ 2100 RPM
- 340 ISO Engine HP (254 Kw) @ 2100 RPM
- e3 SCR Technology
- Air-To-Air Aftercooled, Common Rail Injection, Turbocharged

Electronic Engine Management (EEM) with Dual ERPM Settings
Electronic Controlled Viscous Fan Drive
Dual Element Dry Type Air Cleaner
Vertical Exhaust at Right Front Cab Post
Cooling System: Antifreeze to Minus 30F (-34C)
Fuel Tank Capacity: 167 Gal (630L)
DEF Tank Capacity: 16 Gal (60L)

POWERTRAIN
Dyna-VT Transmission
- Continuously Variable Transmission to 25 MPH (40 KPH), 60 ft/h (18.2 meter/hour)
- Dynamic Tractor Management with Two Programmable Cruise Speeds

10” Multi-Disc Wet Brakes
- Electro Hydraulic Park Brake (Park Lock)
- High Pressure Power Assisted

Power Differential Lock
1000E/1000 RPM PTO, 1 ¾" 20 Spline Shaft
Rear Fender Mounted PTO Shut-Off
118" (2997mm) long, 4.33" (110mm) Diameter Rear Bar Axle

FRONT WHEEL ASSIST AXLE
Heavy Duty Power Front Axle (PFA)
Shielded Center Drive Line with Electro-Hydraulic Control & Front Wheel Drive Differential Lock
55 Degree Steering Angle
SpeedSteer

HYDRAULICS
Closed Center 46 GPM (175 L/Min) Pump
2900 PSI (200 Bar) Maximum Pressure
4 Electro-Hydraulic Valves, 2 Fingertip Controlled, 2 Joystick Controlled, Flow And Timing Controlled Through Control Center Display (CCD)
Hydrostatic Power Steering

HITCH
3 Point Hitch: Category 3 Linkage with Cat 3/3N Quick Hitch
Drawbar: Category 3, Clevis and Drop Pin
Sway Block Stabilizers

ELECTRICAL SYSTEM
Two 120 Amp Alternators
Two 12 Volt Batteries, 775 CCA each (SAE)
7 Pin ASAE Rear Trailer Electrical Outlet
Electrical Isolator Switch and Jumpstart Point
Solar Panel Trickle Charger on Cab Roof
Automatic Battery Shutoff (30 Minutes)

LIGHTING
6 Front Hood Mounted Single Bulb Worklights
4 Headlights
4 Cab Mounted Double Bulb Worklights
Fold-Out Extremity Warning Lights
2 Roof Mounted Rotating Beacons

INSTRUMENTS
Control Center Display (CCD)
- Video Input
- Electric Valve Control
- ISOBUS Compliant

Tachometer: Digital and Analog
PTO Speed: Digital
Ground Speed Display: Digital
Fuel Level, DEF Level, and Coolant Temp Gauges
Warning/Information Lights

OPERATOR AREA
4 Post Panoramic Cab
Transmission Control T-Handle on Armrest
OptiRide Plus Cab Suspension
Adjustable Steering Column
Front Sun Visor
Air Conditioning and Heater
Air Suspended Seat - Automatic Adjustment
Front And Rear Windshield Wiper/Washer
Dual Large Telescoping Electric Adjustable Side Mirrors with Electric De-icing
Single Inside Rear View Mirror
4 Audio Speakers
Antenna And Wiring Harness for Radio (Less Radio)
2 – 3 Pin 12V Power Outlets
12V Cigarette Lighter Power Outlet
12V Single Pole Cigarette Style Power Outlet
ISO 11783 9-Pin in Cab Connector
ISO 11786 7-Pin in Cab Connector
Magnetic Ashtray

WHEELS AND TIRES
Rear 480/80R50 R1W Dual Wheels, Cast Inner/Steel Outer
Front 420/85R34 R1W Single Waffle Wheels

OTHER STANDARD FEATURES
Auto-Steer Complete: Auto-Guide™ 3000 Sub-Meter (WAAS and OmniStar VBS)
Auto Steering System using the Control Center Display (CCD)
AGCOMMAND Ready with Antenna, Bracket, and Harness (To Complete, See Technology Section)
Lockable Tool Box
SMV & SIS Sign
Molded Rear Fenders
Integrated Belly Weight 1800 lbs (820 Kg) with Front Weight Carrier
English Literature

SUBJECT TO AVAILABILITY

MF 8690

Mississippi State Contract Discount: 25%

MASSEY FERGUSON®

Order Code	Catalog Number	Description	Approx. Weight (lb.)	List Price
		BASE MACHINE		
MF8690	7294619	MF 8690 4WD Base Tractor		315,965.00
		PACKAGES		
315-MPP8001	7294253	Performance Bundle Includes:		18,593.00
		A7034 Dyna-VT Transmission- 31 mph (50 KPH) with Heavy Duty Suspended Front Axle		
		GP393 5 Spool Valves Electric - 3 fingertips and 2 Joystick		
		YM243 Category 3 Heavy Duty Drawbar and Clevis		
		CB002 Engine Block Heater		
		GK007 External Lift Control on Both Sides with External Spool Valve Control		
		GR010 Power Beyond with P/T/LS/D couplers		
		LQ001 Water Separator (Fuel Filter)		
		LA036 540E/1000 RPM Flanged PTO, 6, 20 & 21 Spline		
320-MLP8001	7294254	Luxury Bundle Includes:		8,100.00
		AE065 Maximo Evolution Grammer Seat		
		AQ004 Automatic Climate Control		
		VG078 NightBlaze (Xenon) Cab Worklights - 2 Front & 2 Rear		
		VK004 Worklights on Handrails and Rear Fenders		
		5020418JM CD Player, Bluetooth, Radio with Antenna & Speakers (MP3 Compatible)		
		TRANSMISSION		
		Dyna-VT Transmission - 25 mph (40 KPH).		**In Base**
25-A7034	7294229*	Dyna-VT Transmission- 31 mph (50 KPH) . . . . . with Heavy Duty Suspended Front Axle		15,170.00

***Heavy Duty Fixed / Suspended Front Axles are not compatible with 28" and 30" Waffle Rims with 60" and 64" tread settings when ordering Pivoting Front Fenders.**

		CAB SUSPENSION		
		OptiRide Plus Suspension.		**In Base**
115-AM015	7294244	No Cab Suspension		(4,918.00)
		CAB SEAT		
		Grammar Air Suspended Seat with Armrest.		**In Base**
125-AE042	7294164	Superluxe Grammar Seat		1,497.00
125-AE065	7294235	Maximo Evolution Grammar Seat		2,754.00

SUBJECT TO AVAILABILITY

Order Code	Catalog Number	Description	Approx. Weight (lb.)	List Price
		INSTRUMENT PANEL / CONTROL CENTER DISPLAY (CCD)		
	5020419JM	Control Center Display (CCD) with Radar, Video Input & ISOBUS, Auto-Guide™ 3000 Sub-Meter (WAAS and OmniStar VBS) Auto Steering System- **English Language**. Auto-Guide™ 3000 uses the Control Center Display (CCD).		**In Base**
	5020420JM	Control Center Display (CCD) with Radar, Video Input & ISOBUS, Auto-Guide™ 3000 Sub-Meter (WAAS and OmniStar VBS) Auto Steering System- **French Language**. Auto-Guide™ 3000 uses the Control Center Display (CCD).		No Charge
	5020421JM	Control Center Display (CCD) with Radar, Video Input, ISOBUS, and Auto Steering Ready. (Includes Roof Plate and Wiring Harness)		(4,828.00)
		FRONT AXLE		
		Heavy Duty Fixed Front Axle.		**In Base**
65-NA132*	7294232	Heavy Duty Suspended Front Axle		14,418.00
		***Heavy Duty Fixed / Suspended Front Axles are not compatible with 28" and 30" Waffle Rims with 60" and 64" tread settings when ordering Pivoting Front Fenders.**		
		HYDRAULIC VALVES - REQUIRED		
		4 Spool Valves Electric -2 fingertips, 2 Joystick		**In Base**
50-GP393	7294152	5 Spool Valves Electric-3 fingertips & 2 Joystick		1,743.00
50-GP395	7294153	6 Spool Valves Electric- 4 fingertips & 2 Joystick		3,488.00
		PTO- with In CAB Control		
		1000E/1000 RPM Flanged PTO, 20 spline		**In Base**
100-LA098	7294213	540E/1000 RPM Flanged PTO, 20 spline		No Charge
100-LA105◆	7294214	1000E/1000 RPM Flanged PTO, 20 & 21 spline		268.00
100-LA036◆	7294215	540E/1000 RPM Flanged PTO, 6, 20 & 21 spline		268.00

◆(Not offered with Factory Installed Cat 4 Drawbar. Order additional shafts from Parts)

SUBJECT TO AVAILABILITY

Order Code	Catalog Number	Description	Approx. Weight (lb.)	List Price
		TIRE BRAND SELECTION- REQUIRED		
70-Blank	7294212	Factory Brand Choice		No Charge
70-T0002	7294196	Goodyear Brand Required		1,124.00
70-T0007	7294197	Firestone Brand Required		1,124.00
70-T0010	7294198	Trelleborg Brand Required		1,124.00

Note: Tire brand subject to change without notice unless a Brand is specified in Segment 70.
Tire Brand Availability is listed after each tire size.

FRONT AND REAR TIRES - REQUIRED*

***11 weeks out for changes on Jackson Built Models**

Rear: Single Steel Welded Wheel
Front: Welded Wheel

75-W1587	7294859	R: 710/70R42 R1W (GY, TR)	
	7294796	F: 600/70R28 R1W (GY, TR)	(2,087.00)
75-W1525	7294859	R: 710/70R42 R1W (GY, FI, TR)	
	7294756	F: 480/70R34 R1W (GY, FI, TR)	(3,156.00)
75-W1561	7294878	R: 710/75R42 R1W (TR)	
	7294799	F: 600/65R34 R1W (TR)	837.00
75-W1739	7294878	R: 710/75R42 R1W (TR)	
	7294914	F: 650/60R34 R1W (TR)	1,141.00
75-W1714	7294881	R: 900/60R42 R1W (TR)	
	7294799	F: 600/65R34 R1W (TR)	5,022.00
75-W1743	7294881	R: 900/60R42 R1W (TR)	
	7294914	F: 650/60R34 R1W (TR)	5,326.00

SUBJECT TO AVAILABILITY

Order Code	Catalog Number	Description	Approx. Weight (lb.)	List Price
		FRONT AND REAR TIRES - REQUIRED - (Continued)		
		Rear: Dual Row Crop Single Cast **Front: Waffle Wheel**		
75-Base	7294867	D: 480/80R50 R1W (GY, FI, TR)		
	7294755	F: 420/85R34 R1W (GY, FI, TR)		**In Base**
75-W1414	7294864	D: 480/80R46 R1W (GY, FI)		
	7294750	F: 420/90R30 R1W (GY, FI		(1,587.00)
75-W1391	7294863	D: 520/85R42 R1W (GY, FI)		
	7294750	F: 420/90R30 R1W (GY, FI).		(1,067.00)
75-W1744	7294869	D: 380/90R54 R1W (GY, FI)		
	7294758	F: 380/80R38 R1W (GY, FI).		(193.00)
75-W1598	7294867	D: 480/80R50 R1W (GY, FI, TR)		
	7294756	F: 480/70R34 R1W (GY, FI, TR)		1,129.00
75-W1722	7294867	D: 480/80R50 R1W (GY, FI)		
	7294758	F: 380/80R38 R1W (GY, FI).		858.00
75-W1597	7294865	D: 520/85R46 R1W (GY, FI, TR)		
	7294755	F: 420/85R34 R1W (GY, FI, TR)		461.00
75-W1418	7294865	D: 520/85R46 R1W (GY, FI, TR)		
	7294756	F: 480/70R34 R1W (GY, FI, TR)		1,590.00
75-W1721	7294865	D: 520/85R46 R1W (GY, FI)		
	7294758	F: 380/80R38 R1W (GY, FI)		1,319.00
75-W1404	7294868	D: 320/90R54 R1W (GY, FI)		
	7294757	F: 320/85R38 R1W (GY, FI).		(1,275.00)

SUBJECT TO AVAILABILITY

MF 8690

Mississippi State Contract Discount: 25%

MASSEY FERGUSON®

Order Code	Catalog Number	Description	Approx. Weight (lb.)	List Price
		FACTORY INSTALLED OPTIONS		
		Operators Area		
120-AQ004	7294167	Automatic Climate Control		1,041.00
		Electrical		
195-VG078	7295103	NightBlaze (Xenon) Cab Worklights - 2 Front & 2 Rear		3,197.00
190-VK004	7294171	Worklights on Handrails and Rear Fenders		522.00
		Pivoting Adjustable Front Fenders		
155-WE110	7294204*	Standard Pivoting Front Fenders		1,585.00
155-WE111	7294205*	Wide Pivoting Front Fenders.		1,870.00
		***Heavy Duty Fixed / Suspended Front Axles are not compatible with 28" and 30" Waffle Rims with 60" and 64" tread settings when ordering Pivoting Front Fenders.**		
		Integrated Front Linkage System (IFLS)		
230-F1200	7294173	11000 lbs (5000 kg) Front Linkage Capacity. . . . . Double Acting Cylinders, Two Sets of Front Couplers. **Less Belly Weights** (Requires OptiRide Front Suspended Axle Standard or Reinforced)		10,611.00
230-F1201	7294245	11000 lbs (5000 kg) Front Linkage Capacity. . . . . Double Acting Cylinders, Two Sets of Front Couplers. **Includes Front Belly Weight (761 lbs, 345 kg)** (Requires OptiRide Front Suspended Axle Standard or Reinforced)		12,129.00
		Three Point Hitch		
		Cat 3 Fixed Top & Lower Links w/ Quick Hitch.		**In Base**
85-GC209	7294146	Cat 3 Fixed Top and Lower Links		(1,499.00)
		Drawbar		
		Category 3 Drawbar & Clevis		**In Base**
95-YM243	7294135	Category 3 Heavy Duty Drawbar & Clevis		590.00
95-YM246	7294136	Category 4 Drawbar & Clevis		867.00

SUBJECT TO AVAILABILITY

Order Code	Catalog Number	Description	Approx. Weight (lb.)	List Price
		FACTORY INSTALLED OPTIONS- Continued		
		Miscellaneous Options		
	5020417JM	Radio with Antenna and Speakers (MP3 Compatible)		584.00
	5020418JM	CD Player, Bluetooth, Radio with Antenna & Speakers (MP3 Compatible)		794.00
215-CB002	7294181	Engine Block Heater		142.00
310-GK007	7294236	External Lift Control on Both Sides with External Spool Valve Control		27.00
90-GR010	7294226	Power Beyond with P/T/LS/D couplers		695.00
225-LQ001	7294191	Water Separator (Fuel Filter)		435.00
250-GS001	7294185	Hydraulic Trailer Brakes		1,006.00
250-GS067	7294187	Hydraulic & Pneumatic Trailer Brakes		7,583.00
275-TC005	7294210	French Language OIB and Decals		No Charge
		Factory Installed Weights		
285-YA057 4,326.00	7294209	Front Weights, 24 x 55 kg		2380
345-YB003	7294119	1873 lb (850 kg) Weight for 3-point Linkage		3,211.00
345-YB004	7294120	1873 lb (850 kg) & 1323 lb (600 kg) Weight for 3-point Linkage		5,351.00
325-RD040	7294192	Rear Wheel Weights, 2 x 250 kg		1,739.00
325-RD041	7294200	Rear Wheel Weights, 4 x 250 kg		3,478.00
		Rear Fender Options		
		2.00M (78.75") Wide Rear Fenders		**In Base**
255-WD220	7294237	2.00M (78.75") with 100mm (4") Side Ext.		1,235.00
255-WD229	7294238	2.00M (78.75") with 145mm (5.75") Side Ext.		1,336.00
255-WD234	7294239	2.00M (78.75") with 170mm (6.5") Side Ext.		1,470.00

SUBJECT TO AVAILABILITY

MASSEY FERGUSON®

Order Code	Catalog Number	Description	Approx. Weight (lb.)	List Price
		DEALER INSTALLED WEIGHTS		
	5020186JM	Front Weight Package, 8 x 55 kg (121 lbs.)	968	1,442.00
	5020187JM	Front Weight Package, 10 x 55 kg (121 lbs.)	1210	1,803.00
	5020188JM	Front Weight Package, 12 x 55 kg (121 lbs.)	1452	2,163.00
	5020189JM	Front Weight Package, 14 x 55 kg (121 lbs.)	1694	2,524.00
	5020190JM	Front Weight Package, 16 x 55 kg (121 lbs.)	1936	2,884.00
	5020191JM	Front Weight Package, 18 x 55 kg (121 lbs.)	2178	3,245.00
	5020192JM	Front Weight Package, 24 x 55 kg (121 lbs.)	2904	4,326.00
	5020200JM	Rear Wheel Weights, 2 x 250 kg (551 lbs.). Mounts to One Side of Steel Rim		1,913.00
	5020201JM	Rear Wheel Weights, 4 x 250 kg (551 lbs.). Mounts to Each Side of the Steel Rim		3,825.00
	5020202JM	Rear Wheel Weights, 2 x 250 kg (551 lbs.). Mounts to Cast Center or Another 250 kg Weight		1,913.00
		DEALER INSTALLED FRONT OUTER TIRE and WHEELS		

It is required that T0002 -- Goodyear Brand, T0007 -- Firestone, T0010 -- Trelleborg, be ordered for the factory to guarantee the correct tire brand is supplied on the tractor.

	5020381JM	380/80R38 R1W Firestone Radial (142A8/142B) All Traction DT		6,756.00
	5020396JM	380/80R38 R1W Goodyear DT800 (142A8/142B)		6,615.00
	5020378JM	420/85R34 R1W Firestone Radial (147A/147B) All Traction DT		6,703.00
	5020393JM	420/85R34 R1W Goodyear Super Traction Radial (147A8/147B)		6,822.00
	5020414JM	420/85R34 R1W Trelleborg TM600 (142A8/139B)		6,561.00
	5020399JM	420/90R30 R1W Goodyear DT800 (147A8/147B)		5,942.00
	5020405JM	420/90R30 R1W Firestone Radial All (145A8/145B) Traction DT		6,014.00
	5020408JM	480/70R34 R1W Firestone Radial 9000 (155A8/155B)		7,194.00
	5020402JM	480/70R34 R1W Goodyear DT812 (146A8/146B)		6,539.00
	5020411JM	480/70R34 R1W Trelleborg TM700 (143A8/143B)		6,539.00
	5020375JM	380/85R34 R1 Firestone Radial (137A8/137B) All Traction DT		5,699.00
	5020390JM	380/85R34 R1W Goodyear DT800 (137A/137B)		6,397.00
	5020384JM	420/85R30 R1W Goodyear Super Traction Radial (144A/144B)		5,678.00
	5020372JM	380/85R34 R1W Trelleborg TM600 (137A8/137B)		6,956.00
	5020366JM	420/85R30 R1W Trelleborg TM600 (140A8/137B)		5,517.00
		Spacer Kits are Required to Install Front Outers		
	72517923JM	15.5” Spacer Kit (To achieve 120" tread setting)		1,652.00
	72517922JM	22.0” Spacer Kit		2,313.00
		Rear Dual Spacers – Optional		
	72517687JM	9” Spacer Kit for 10 Bolt Hub and Steel Center Rims		2,517.00

SUBJECT TO AVAILABILITY

RESERVED

SUBJECT TO AVAILABILITY

WHEEL TREAD SETTINGS

WHEEL TREAD SETTINGS

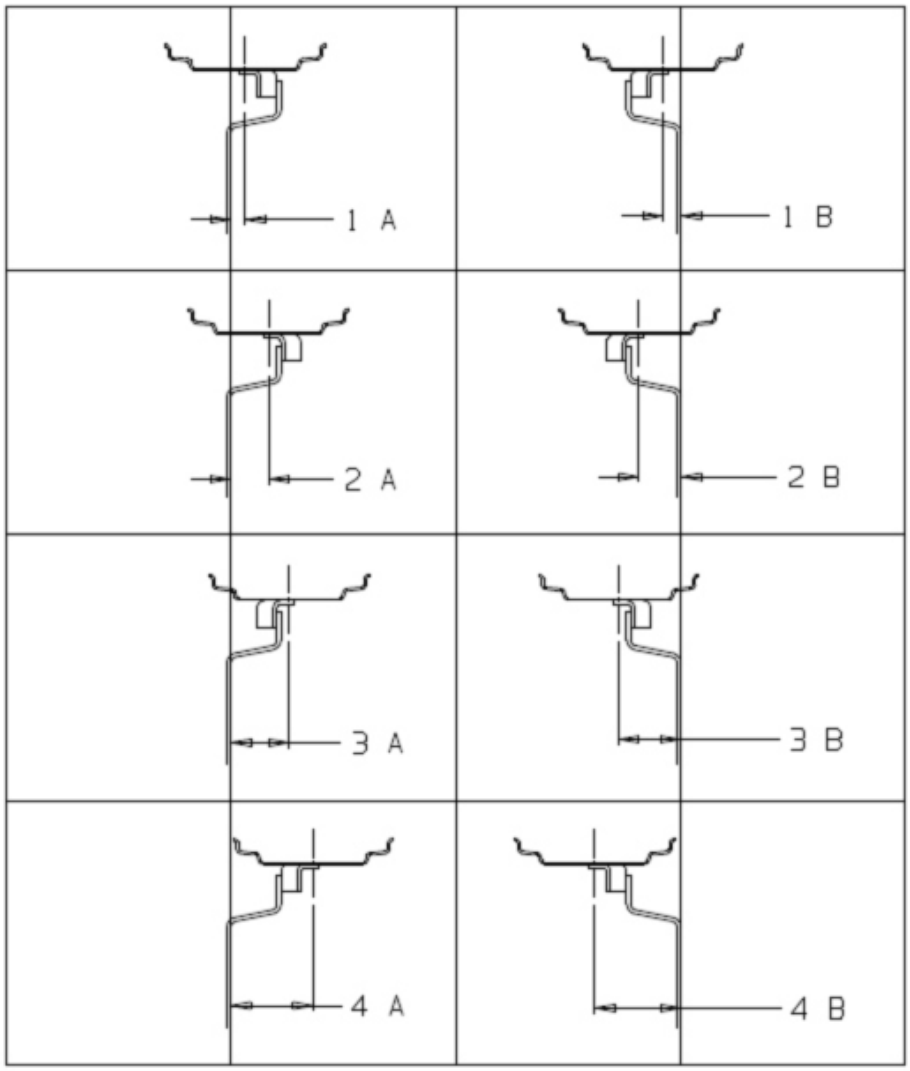

Position	Rims with Adjustable Disc	Track Width Std. Axle	Track Width Reinforced Axle
Wheel Disc Facing Inwards	4A	60.9" (1548 mm)	61.4" (1560mm)
	3A	65.0" (1652 mm)	65.5" (1664mm)
	2A	69.0" (1752 mm)	69.4" (1764mm)
	1A	73.1" (1856 mm)	73.5" (1868mm)
Wheel Disc Facing Outward	1B	76.7" (1948 mm)	77.2" (1960mm)
	2B	80.8" (2052 mm)	81.3" (2064mm)
	3B	84.7" (2142 mm)	85.2" (2164mm)
	4B	88.8" (2256 mm)	89.3" (2268mm)

Front Rims With Welded Disks:

Position	Rims with Welded Disc	Track Width Standard Axle	Track Width Reinf. Axle
Wheel Disc Facing Inwards	1A	67.2" (1708mm)	67.7" (1720mm)
Wheel Disc Facing Outward	1B	80.8" (2052mm)	81.3" (2064mm)

WHEEL TREAD SETTINGS

Rear Rims - Single:

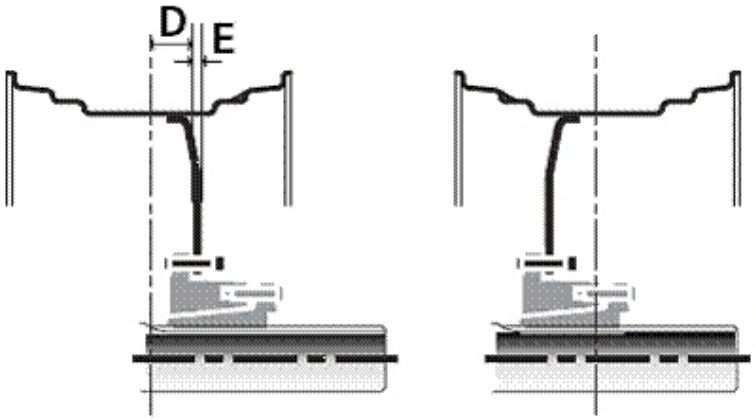

D = Rim offset 2.95" (75mm), E = Rim Disk thickness. 59" (15mm)		
	Disc Facing Inward (min/max)	**Disc Facing Outward (min/max)**
HA260 Short Bar Axle	70.1" (1780 mm) / 83.1" (2112 mm)	82.9" (2106 mm) / 96.0" (2438 mm)
HA260 Long Bar Axle	68.6" (1743 mm) / 112.7" (2862 mm)	81.5" (2069 mm) / 125.5" (3188 mm)

Rear Rims - Single:

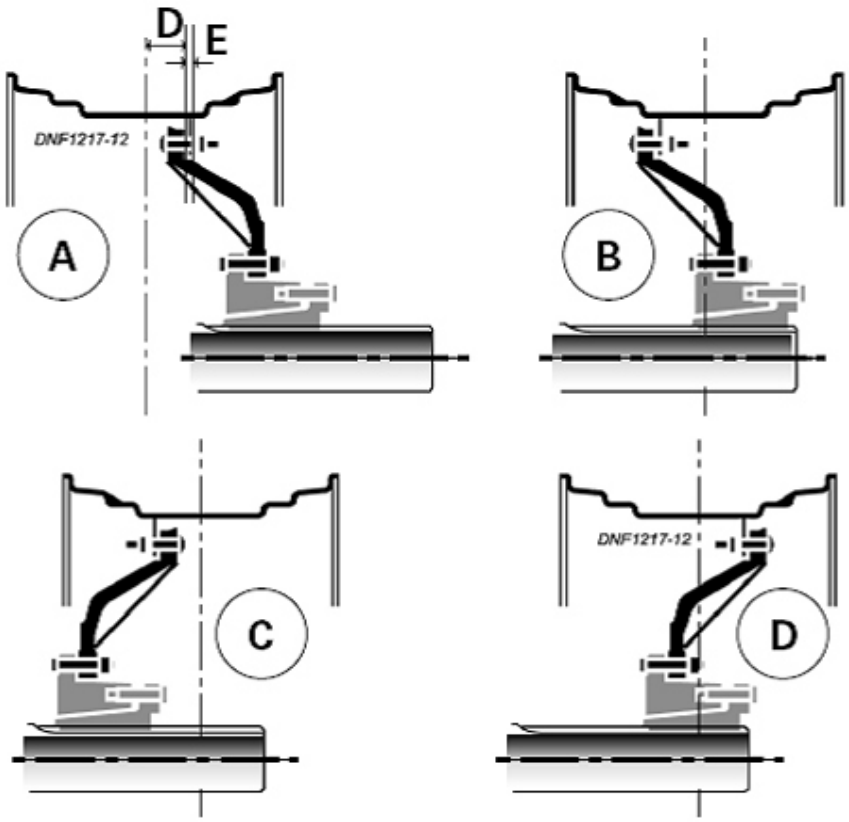

D = Rim offset 2.95" (75mm), E = Rim Disk thickness. 59" (15mm)		
	Disc Facing Inward (min/max)	**Disc Facing Outward (min/max)**
HA260 Short Bar Axle	A - 61.6" (1566 mm) / 74.7" (1898 mm)	D - 81.5" (2070 mm) / 94.6" (2402 mm)
	B - 74.5" (1892 mm) / 87.5" (2224 mm)	C - 94.3" (2396 mm) / 107.4" (2728 mm)
HA260 Long Bar Axle	A - 60.2" (1529 mm) / 104.2" (2648 mm)	D - 80.1" (2033 mm) / 124.1" (3152 mm)
	B - 73.0" (1855 mm) / 117.1" (2974 mm)	C - 92.9" (2359 mm) / 136.9" (3478 mm)

WHEEL TREAD SETTINGS

Rear Rims - Outer Duals:

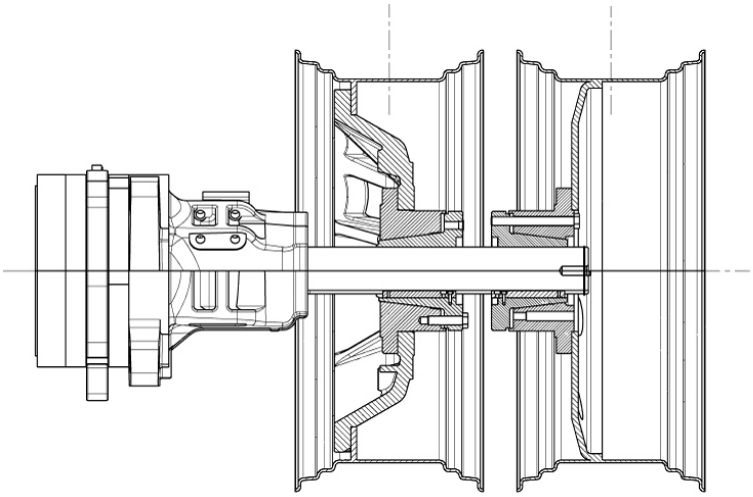

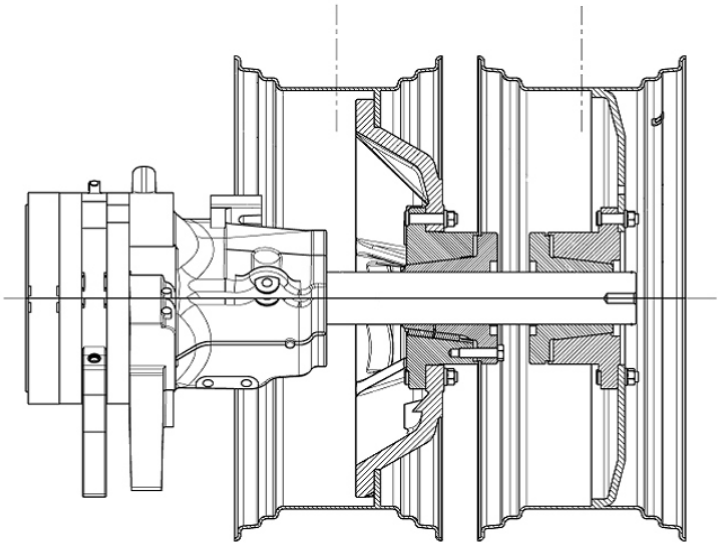

D = Rim offset 2.95" (75mm), E = Rim Disk thickness. 59" (15mm)		
	Disc Facing Inward (max)	**Disc Facing Outward (max)**
HA260 Long Bar Axle	112.7" (2862 mm)	125.5" (3188 mm)

MASSEY FERGUSON®

MF8700 SERIES

Jackson Built
Possible Order Modifications in Weeks

	> 18	16 - 18	14 - 16	10 -14	6 - 10
Auto-Guide 3000	o	o	o	X	X
Front Axle/Rear Axle Type	o	0	X	X	X
Air Conditioning/Heater	o	o	X	X	X
Cab Audio	o	o	o	o	o
Front Fenders	o	o	o	o	o
Front Weights	o	o	o	o	o
Hydraulic/Pneumatic Trailer Brake	o	o	X	X	X
Hydraulic Remotes	o	o	o	X	X
Rear Fenders	o	o	o	X	X
Rear Linkage & PTO	o	o	X	X	X
Seat	o	o	o	X	X
Wheel & Tires	o	o	X	X	X
Working Lights & Mirrors	o	o	o	X	X

o = Components can be requested to be modified.
X = Components are frozen and cannot be modified.
*Dates subject to change without notice.

Guidelines for Availability and Order Changes

These charts list the possible change requests that can be made to the listed components through e-Ordering. The information provided is built off of the Scheduled Completion Date.

***Scheduled Completion Date; Not the Planned Available To Ship (PATS) Date**

Updates and Improvements

NEW MODEL CHANGES

- AGCO POWER AP84-4: AGCO POWER is the premier off-road engine manufacturer, and the 6-cylinder AGCO POWER engine provides unmatched torque in terms of peak and rise.
- Engine Power Management (EPM) provides boosted engine HP under certain conditions.
- Emissions: The most efficient fluid solution provides more torque at low speeds.
- Styling: Redesigned Hood..
- New CYCLAIR cooling package. Redesigned to simplify maintenance and help with heat rejection.
- Hydraulic Flow: Increased hydraulic capacity to 54 GPM.
- Auto-Guide 3000 with optional C3000: Guidance is integrated into the Control Center Display and an optional C3000 features increased functionality.
- New SIS (Setup & Information Screen) replaces the Dot Matrix Screen on left of dash.
  - •50% larger
  - •10x higher resolution
- New Lighting and 3 Point controls on Right Hand Pillar.
- New MultiPad Joystick

Please refer to MF 8700 Series Product Information Guide for more information. (Available Soon)

Serial Number Reference For Determining Model Year Code.

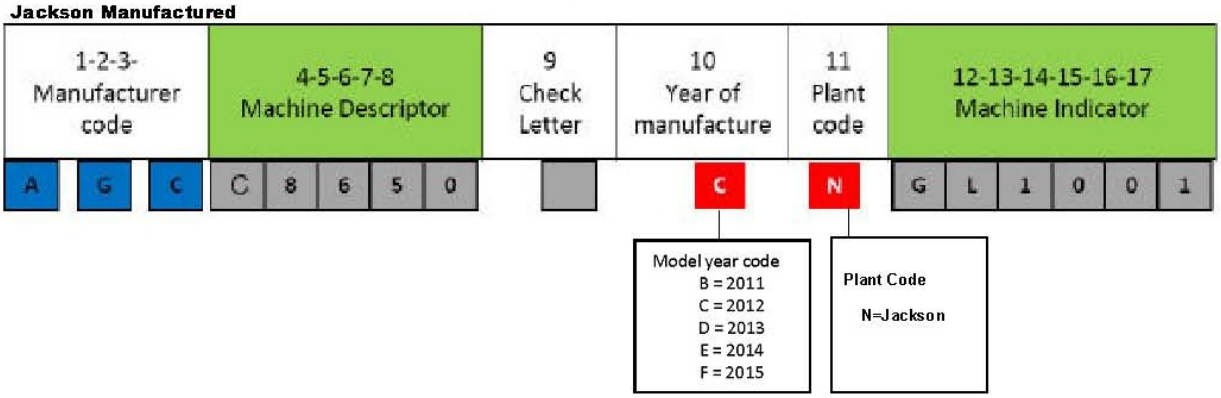

MF8700 SERIES

Mississippi State Contract Discount: 25%

STANDARD EQUIPMENT

F.O.B. PORT OF ENTRY

MODEL

MF8727: 270 Max Engine HP, 240 Rated Engine HP, 205 PTO HP
MF8730: 295 Max Engine HP, 265 Rated Engine HP, 225 PTO HP
MF8732: 320 Max Engine HP, 290 Rated Engine HP, 250 PTO HP
MF8735: 350 Max Engine HP, 320 Rated Engine HP, 275 PTO HP
MF8737: 370 Max Engine HP, 340 Rated Engine HP, 290 PTO HP

AP84-4: AGCO POWER 8.4L Tier 4F, 6 Cylinder Engine
Air-To-Air Aftercooled, Common Rail Injection, ★Twin Turbocharged
Electronic Engine Management (EEM4F) with Dual ERPM Settings
Suction Type Viscous Fan
Venturi-Type Engine Air Pre-Cleaner
Two-Stage Cassette-Type Engine Air Filter
Side Mounted Muffler with Integrated SCR Catalyst
(Mounted on Right Hand Corner of Cab)
Fuel Tank Capacity: 167 Gal (630L)
DEF Tank Capacity: 16 Gal (60L)
Two Fuel Filters
Automatic Starting Aid, Intake Grid Heater
CYCLAIR Cooling Package

POWERTRAIN

Dyna-VT Transmission 31 MPH (50 KPH), 60 ft/h (18.2 meter/hour)
Dynamic Tractor Management (DTM) with
Two Programmable Cruise Speeds
10” Multi-Disc Wet Brakes
- High Pressure Power Assisted
- Electro Hydraulic Park Brake (Park Lock)

Power Differential Lock
1000E/1000 RPM PTO, 1 ¾" 20 Spline Shaft
Rear Fender Mounted PTO Engage/Disengage
118" (2997mm) long, 4.33" (110mm) Diameter Rear Bar Axle

FRONT WHEEL ASSIST AXLE

Suspended Reinforced Power Front Axle (PFA)
Shielded Center Drive Line with Electro-Hydraulic Control
& Front Wheel Drive Differential Lock
55 Degree Steering Angle
SpeedSteer Quick Steering

HYDRAULICS

Closed Center 54 GPM (205L/Min) Pump
2900 PSI (200 Bar) Maximum Pressure
4 Electro-Hydraulic Valves, 2 Fingertip Controlled, 2 Joystick Controlled,
Flow And Timing Controlled Through Center Display Display (CCD)
Hydrostatic Power Steering

3-POINT HITCH & DRAWBAR

3-Point Hitch: with Category III/IVN Quick Hitch
Drawbar: Category III with Clevis and Drop Pin
Sway Block Stabilizers

ELECTRICAL SYSTEM

Two 12V, 120 amp Alternators
Two 12 Volt Batteries, 775 CCA each (SAE)
7-Pin Trailer Connector
Electrical Isolator Switch and Jumpstart Point
Solar Panel Trickle Charger on Cab Roof
Automatic Battery Shutoff (30 Minutes)
Two 3 Pin 12V Power Outlets
One 12V Single Pole Power Outlet
ISO 11783 9-Pin and ISO 11786 7-Pin in Cab Connector

LIGHTING

6 Front Hood Mounted Single Bulb Worklights
4 Headlights
4 Cab Mounted Single Bulb Front Worklights,
2 Cab Mounted Double Bulb Rear Worklights
Fold-Out Extremity Warning Lights
2 Roof Mounted Rotating Beacons

INSTRUMENTS

Control Center Display (CCD)
Video Input
Electric Valve Control
ISOBUS Compliant
Color & Digital Dash Display
SIS (Setup & Information Screen)
Tachometer: Digital and Analog
PTO Speed: Digital
Ground Speed Display: Digital
Fuel Level, DEF Level, and Coolant Temp Gauges
Warning/Information Lights

OPERATOR AREA

4-Post Panorama Cab
T-Handle Transmission Control on Armrest
OptiRide Plus Cab Suspension
Adjustable Steering Column
Front Sun Visor
Air Conditioning and Heater - Manual
Superluxe Grammar Seat - Air Suspended, Heated Seat
Front And Rear Windshield Wiper/Washer
Dual Large Telescoping Electric Adjustable Side Mirrors
with Electric De-icing
Single Inside Rear View Mirror
4 Audio Speakers
AM/FM, Bluetooth, Radio with CD Player, Antenna & Speakers
(MP3 Compatible)
(Requires Extra Microphone for Bluetooth Mobile Phone Calls.)
Magnetic Ashtray
Control Panel & 3-Point Hitch Controls on Right Hand Pillar

WHEELS AND TIRES

MF8727 / MF8730
Rear 480/80R46 R1W Dual Wheels, Cast Inner/Steel Outer
Front 420/90R30 R1W Single Waffle Wheels
MF8732 / MF8735 / MF8737
Rear 480/80R50 R1W Dual Wheels, Cast Inner/Steel Outer
Front 420/85R34 R1W Single Waffle Wheels

OTHER STANDARD FEATURES

Auto-Guide 3000
Auto Steering System using the Control Center Display (CCD)
Full AGCOMMAND Ready
(To Complete, See Technology Section for Subscription)
Lockable Tool Box
SMV & SIS Sign
Molded Rear Fenders 2.10m
Integrated Belly Weight with Front Weight Carrier
Fender Mounted External Lift Control on Both Sides with External
Spool Valve Control
English Literature

MF8700 SERIES

Mississippi State Contract Discount: 25%

MASSEY FERGUSON®

Order Code	Catalog Number	Description	Approx. Weight (lb.)	List Price
BASE MACHINE				
MF8727	7294620	Massey Ferguson 8727 - 205 PTO HP 4WD Tractor		280,215.00
MF8730	7294621	Massey Ferguson 8730 - 225 PTO HP 4WD Tractor		295,908.00
MF8732	7294622	Massey Ferguson 8732 - 250 PTO HP 4WD Tractor		317,579.00
MF8735	7294623	Massey Ferguson 8735 - 275 PTO HP 4WD Tractor		339,323.00
MF8737	7294624	Massey Ferguson 8737 - 290 PTO HP 4WD Tractor		349,436.00
PACKAGES				
315-MPP8004	7294275	Performance Bundle Includes:		4,944.00
		YM243 Category III Heavy Duty Drawbar & Clevis		
		MU051 3rd, 4th, 5th, & 6th Electric, Fingertip Controlled Valves		
		LA036 540E/1000 RPM Flanged PTO, 6, 20 & 21 spline		
		CB002 Engine Block Heater		
		LQ001 Water Separator (Fuel Filter)		
315-MPP8005	7294276	Performance Bundle Includes:		4,944.00
		YM243 Category III Heavy Duty Drawbar & Clevis		
		MU051 3rd, 4th, 5th, & 6th Electric, Fingertip Controlled Valves		
		LA105 1000E/1000 RPM Flanged PTO, 20 & 21 spline		
		CB002 Engine Block Heater		
		LQ001 Water Separator (Fuel Filter)		
320-MLP8003	7294277	Luxury Bundle Includes:		7,022.00
		AQ004 Automatic Climate Control		
		VG078 NightBlaze (Xenon) Cab Worklights - 2 Front & 2 Rear		
		AE065 Maximo Evolution Grammar Seat		
TRANSMISSION*				
25-EA622	Base	Dyna-VT Transmission- 31 mph (50 KPH) with Heavy Duty Suspended Front Axle		**In Base**
25-A7035	7294255	Dyna-VT Transmission - 25 mph (40 KPH) with Heavy Duty Fixed Front Axle		(15,625.00)

***Heavy Duty Fixed / Suspended Front Axles are not compatible with 28" and 30" Waffle Rims with 60" and 64" tread settings when ordering Pivoting Front Fenders.**

TRANSMISSION CONTROL				
30-EC008	Base	"T" Lever Control on Armrest		**In Base**
30-EC022	7294256	MultiPad Joystick		1,899.00
CAB SUSPENSION				
115-AM045	Base	OptiRide Plus Suspension		**In Base**
115-AM015	7294244	No Cab Suspension		(5,066.00)
CAB SEAT				
125-AE042	Base	Superluxe Grammar Seat		**In Base**
125-AE065	7294261	Maximo Evolution Grammar Seat		2,837.00

Order Code	Catalog Number	Description	Approx. Weight (lb.)	List Price
INSTRUMENT PANEL / CONTROL CENTER DISPLAY (CCD)				
	5020419JM	Control Center Display (CCD) with Radar, Video Input & ISOBUS, Auto-Guide™ 3000 Sub-Meter (WAAS and OmniStar VBS) Auto Steering System- **English Language**. Auto-Guide™ 3000 uses the Control Center Display (CCD).		**In Base**
	5020420JM	Control Center Display (CCD) with Radar, Video Input & ISOBUS, Auto-Guide™ 3000 Sub-Meter (WAAS and OmniStar VBS) Auto Steering System- **French Language**. Auto-Guide™ 3000 uses the Control Center Display (CCD).		No Charge
	5020421JM	Control Center Display (CCD) with Radar, Video Input, . . . ISOBUS, and Auto Steering Ready. (Includes Roof Plate and Wiring Harness)		(4,828.00)
AUXILIARY VALES 1 & 2				
50-KX012	Base	Valves 1 and 2 Electric, with Multi-Function Joystick on the Armrest		**In Base**
AUXILIARY VALVE 3, 4, 5 & 6				
55-MU031	Base	3rd and 4th Electric, Fingertip Controlled Valves . . . . . with Fingertips located on Right Hand Console		**In Base**
55-MU051	7294258	3rd, 4th, 5th, & 6th Electric, Fingertip Controlled Valves . . with Fingertips located on Right Hand Console		3,593.00
PTO- WITH IN CAB CONTROL				
100-LA104	Base	1000E/1000 RPM Flanged PTO, 20 Spline Shaft Included.		**In Base**
100-LA098	7294213	540E/1000 RPM Flanged PTO, 20 Spline Shaft Included. .		No Charge
100-LA105*	7294214	1000E/1000 RPM Flanged PTO, ... 20 & 21 Spline Shaft Included		276.00
100-LA036*	7294215	540E/1000 RPM Flanged PTO, ... 6, 20 & 21 Spline Shaft Included		276.00

***(Not offered with Factory Installed Cat 4 Drawbar. Order additional shafts from Parts)**

Order Code	Catalog Number	Description	Approx. Weight (lb.)	List Price

TIRES FOR MF 8727

TIRE BRAND SELECTION- REQUIRED

70-Blank	7294212	Factory Brand Choice	No Charge
70-T0001	7294195	Michelin Brand Required	1,552.00
70-T0002	7294196	Goodyear Brand Required	1,158.00
70-T0007	7294197	Firestone Brand Required	1,158.00
70-T0010	7294198	Trelleborg Brand Required	1,158.00

Note: Tire brand subject to change without notice unless a Brand is specified in Segment 70
Tire Brand Availability is listed after each tire size.

FRONT AND REAR TIRES - REQUIRED*

***11 weeks out for changes on Jackson Built Models**

Rear: Single Steel Welded Wheel
Front: Welded Wheel

75-W1583	7294856B1	Rear:	650/85R38 R1W (MI, TR)	
	7294796B1	Front:	600/70R28 R1W (MI, TR)	(5,258.00)
75-W1585	7294857B1	Rear:	710/70R38 R1W (MI, GY, FI, TR)	
	7294795B1	Front:	600/65R28 R1W (MI, GY, FI, TR)	(4,840.00)
75-W1587	7294859B1	Rear:	710/70R42 R1W (MI, GY, TR)	
	7294796B1	Front:	600/70R28 R1W (MI, GY, TR)	(515.00)

Rear: Single Steel Welded Wheel
Front: Waffle Wheel

75-W1525	7294859B1	Rear:	710/70R42 R1W (MI, GY, FI, TR)	
	7294756B1	Front:	480/70R34 R1W (MI, GY, FI, TR)	(1,616.00)

TIRES FOR MF 8727

FRONT AND REAR TIRES - REQUIRED - (CONTINUED)

Rear: Dual Row Crop Single Cast
Front: Waffle Wheel

Order Code	Catalog Number	Description	Approx. Weight (lb.)	List Price
75-Base	7294864B1	Duals: 480/80R46 R1W (MI, FI)		
	7294750B1	Front: 420/90R30 R1W (MI, FI		**In Base**
75-W1391	7294863B1	Duals: 520/85R42 R1W (MI, GY, FI)		
	7294750B1	Front: 420/90R30 R1W (MI, GY, FI)		536.00
75-W1744	7294869B1	Duals: 380/90R54 R1W (GY, FI, TR)		
	7294758B1	Front: 380/80R38 R1W (GY, FI, TR)		1,436.00
75-W1526	7294867B1	Duals: 480/80R50 R1W (MI, GY, FI, TR)		
	7294755B1	Front: 420/85R34 R1W (MI, GY, FI, TR)		1,635.00
75-W1598	7294867B1	Duals: 480/80R50 R1W (MI, GY, FI, TR)		
	7294756B1	Front: 480/70R34 R1W (MI, GY, FI, TR)		2,798.00
75-W1722	7294867B1	Duals: 480/80R50 R1W (MI, GY, FI, TR)		
	7294758B1	Front: 380/80R38 R1W (MI, GY, FI, TR)		2,519.00
75-W1597	7294865B1	Duals: 520/85R46 R1W (MI, GY, FI, TR)		
	7294755B1	Front: 420/85R34 R1W (MI, GY, FI, TR)		2,110.00
75-W1418	7294865B1	Duals: 520/85R46 R1W (MI, GY, FI, TR)		
	7294756B1	Front: 480/70R34 R1W (MI, GY, FI, TR)		3,273.00
75-W1721	7294865B1	Duals: 520/85R46 R1W (MI, GY, FI, TR)		
	7294758B1	Front: 380/80R38 R1W (MI, GY, FI, TR)		2,994.00
75-W1404	7294868B1	Duals: 320/90R54 R1W (MI, GY, FI)		
	7294757B1	Front: 320/85R38 R1W (MI, GY, FI)		322.00
75-W1864	7294919B1	Duals: VF480/80R46 R1W (MI)		
	7294917B1	Front: VF380/85R34 R1W (MI)		TBA
75-W1865	7294920B1	Duals: VF480/80R50 R1W (MI)		
	7294918B1	Front: VF420/85R34 R1W (MI)		TBA
75-W1865	7294923B1	Duals: IF480/80R50 R1W (FI)		
	7294922B1	Front: IF420/85R34 R1W (FI)		TBA
*75-W1401	7294864B1	Duals: 480/80R46 R1W (MI, GY, FI, TR)		
	7294754B1	Front: 380/85R34 R1W (MI, GY, FI, TR)		(247.00)
*75-W1399	7294863B1	Duals: 520/85R42 R1W (MI, GY, FI, TR)		
	7294754B1	Front: 380/85R34 R1W (MI, GY, FI, TR)		289.00
*75-W1596	7294863B1	Duals: 520/85R42 R1W (MI, GY, TR)		
	7294749B1	Front: 420/85R30 R1W (MI, GY, TR)		500.00

***Requires Dealer Installed Front Duals ordered from Loose Accessories**

Rear: Dual Row Crop Single Cast
Front: Welded Steel

75-W1733	7294867B1	Duals: 480/80R50 R1W (MI, GY, TR)		
	7294796B1	Front: 600/70R28 R1W (MI, GY, TR)		3,899.00
75-W1746	7294865B1	Duals: 520/85R46 R1W (MI, GY, TR)		
	7294796B1	Front: 600/70R28 R1W (MI, GY, TR)		4,374.00

Field Installed Spacer Kit - Rear Wheels

	72517687JM	Dual Wheel Spacer Kit - 240mm		2,517.00

Order Code	Catalog Number	Description	Approx. Weight (lb.)	List Price

TIRES FOR MF 8730

TIRE BRAND SELECTION- REQUIRED

70-Blank	7294212	Factory Brand Choice	No Charge
70-T0001	7294195	Michelin Brand Required	1,552.00
70-T0002	7294196	Goodyear Brand Required	1,158.00
70-T0007	7294197	Firestone Brand Required	1,158.00
70-T0010	7294198	Trelleborg Brand Required	1,158.00

Note: Tire brand subject to change without notice unless a Brand is specified in Segment 70.
Tire Brand Availability is listed after each tire size.

FRONT AND REAR TIRES - REQUIRED*

***11 weeks out for changes on Jackson Built Models**

Rear: Single Steel Welded Wheel
Front: Welded Wheel

75-W1583	7294856B1	Rear:	650/85R38 R1W (MI, TR)	
	7294796B1	Front:	600/70R28 R1W (MI, TR)	(5,258.00)
75-W1585	7294857B1	Rear:	710/70R38 R1W (MI, GY, FI, TR)	
	7294795B1	Front:	600/65R28 R1W (MI, GY, FI, TR)	(4,840.00)
75-W1587	7294859B1	Rear:	710/70R42 R1W (MI, GY, TR)	
	7294796B1	Front:	600/70R28 R1W (MI, GY, TR)	(515.00)
75-W1561	7294878B1	Rear:	710/75R42 R1W (TR)	
	7294799B1	Front:	600/65R34 R1W (TR)	2,497.00
75-W1739	7294878B1	Rear:	710/75R42 R1W (TR)	
	7294914B1	Front:	650/60R34 R1W (TR)	2,810.00
75-W1714	7294881B1	Rear:	900/60R42 R1W (TR)	
	7294799B1	Front:	600/65R34 R1W (TR)	6,808.00
75-W1743	7294881B1	Rear:	900/60R42 R1W (TR)	
	7294914B1	Front:	650/60R34 R1W (TR)	7,121.00

Rear: Single Steel Welded Wheel
Front: Waffle Wheel

75-W1525	7294859B1	Rear:	710/70R42 R1W (MI, GY, FI, TR)	
	7294756B1	Front:	480/70R34 R1W (MI, GY, FI, TR)	(1,616.00)

TIRES FOR MF 8730

FRONT AND REAR TIRES - REQUIRED - (CONTINUED)

Rear: Dual Row Crop Single Cast
Front: Waffle Wheel

Order Code	Catalog Number	Description	Approx. Weight (lb.)	List Price
75-Base	7294864B1	Duals: 480/80R46 R1W (MI, FI)		
	7294750B1	Front: 420/90R30 R1W (MI, FI		**In Base**
75-W1391	7294863B1	Duals: 520/85R42 R1W (MI, GY, FI)		
	7294750B1	Front: 420/90R30 R1W (MI, GY, FI)		536.00
75-W1744	7294869B1	Duals: 380/90R54 R1W (GY, FI, TR)		
	7294758B1	Front: 380/80R38 R1W (GY, FI, TR)		1,436.00
75-W1526	7294867B1	Duals: 480/80R50 R1W (MI, GY, FI, TR)		
	7294755B1	Front: 420/85R34 R1W (MI, GY, FI, TR)		1,635.00
75-W1598	7294867B1	Duals: 480/80R50 R1W (MI, GY, FI, TR)		
	7294756B1	Front: 480/70R34 R1W (MI, GY, FI, TR)		2,798.00
75-W1722	7294867B1	Duals: 480/80R50 R1W (MI, GY, FI, TR)		
	7294758B1	Front: 380/80R38 R1W (MI, GY, FI, TR)		2,519.00
75-W1597	7294865B1	Duals: 520/85R46 R1W (MI, GY, FI, TR)		
	7294755B1	Front: 420/85R34 R1W (MI, GY, FI, TR)		2,110.00
75-W1418	7294865B1	Duals: 520/85R46 R1W (MI, GY, FI, TR)		
	7294756B1	Front: 480/70R34 R1W (MI, GY, FI, TR)		3,273.00
75-W1721	7294865B1	Duals: 520/85R46 R1W (MI, GY, FI, TR)		
	7294758B1	Front: 380/80R38 R1W (MI, GY, FI, TR)		2,994.00
75-W1404	7294868B1	Duals: 320/90R54 R1W (MI, GY, FI)		
	7294757B1	Front: 320/85R38 R1W (MI, GY, FI)		322.00
75-W1864	7294919B1	Duals: VF480/80R46 R1W (MI)		
	7294917B1	Front: VF380/85R34 R1W (MI)		TBA
75-W1865	7294920B1	Duals: VF480/80R50 R1W (MI)		
	7294918B1	Front: VF420/85R34 R1W (MI)		TBA
75-W1865	7294923B1	Duals: IF480/80R50 R1W (FI)		
	7294922B1	Front: IF420/85R34 R1W (FI)		TBA
*75-W1401	7294864B1	Duals: 480/80R46 R1W (MI, GY, FI, TR)		
	7294754B1	Front: 380/85R34 R1W (MI, GY, FI, TR)		(247.00)
*75-W1399	7294863B1	Duals: 520/85R42 R1W (MI, GY, FI, TR)		
	7294754B1	Front: 380/85R34 R1W (MI, GY, FI, TR)		289.00
*75-W1596	7294863B1	Duals: 520/85R42 R1W (MI, GY, TR)		
	7294749B1	Front: 420/85R30 R1W (MI, GY, TR)		500.00

***Requires Dealer Installed Front Duals ordered from Loose Accessories**

Rear: Dual Row Crop Single Cast
Front: Welded Steel

75-W1733	7294867B1	Duals: 480/80R50 R1W (MI, GY, TR)		
	7294796B1	Front: 600/70R28 R1W (MI, GY, TR)		3,899.00
75-W1746	7294865B1	Duals: 520/85R46 R1W (MI, GY, TR)		
	7294796B1	Front: 600/70R28 R1W (MI, GY, TR)		4,374.00

Field Installed Spacer Kit - Rear Wheels

	72517687JM	Dual Wheel Spacer Kit - 240mm		2,517.00

Order Code	Catalog Number	Description	Approx. Weight (lb.)	List Price

TIRES FOR MF 8732

TIRE BRAND SELECTION- REQUIRED

70-Blank	7294212	Factory Brand Choice	No Charge
70-T0001	7294195	Michelin Brand Required	1,552.00
70-T0002	7294196	Goodyear Brand Required	1,158.00
70-T0007	7294197	Firestone Brand Required	1,158.00
70-T0010	7294198	Trelleborg Brand Required	1,158.00

Note: Tire brand subject to change without notice unless a Brand is specified in Segment 70.
Tire Brand Availability is listed after each tire size.

FRONT AND REAR TIRES - REQUIRED*

***11 weeks out for changes on Jackson Built Models**

Rear: Single Steel Welded Wheel
Front: Welded Wheel

75-W1583	7294856	Rear:	650/85R38 R1W (MI, TR)	
	7294796	Front:	600/70R28 R1W (MI, TR)	(8,889.00)
75-W1585	7294857	Rear:	710/70R38 R1W (MI, GY, FI, TR)	
	7294795	Front:	600/65R28 R1W (MI, GY, FI, TR)	(6,474.00)
75-W1587	7294859	Rear:	710/70R42 R1W (MI, GY, TR)	
	7294796	Front:	600/70R28 R1W (MI, GY, TR)	(2,150.00)
75-W1561	7294878	Rear:	710/75R42 R1W (TR)	
	7294799	Front:	600/65R34 R1W (TR)	862.00
75-W1739	7294878	Rear:	710/75R42 R1W (TR)	
	7294914	Front:	650/60R34 R1W (TR)	1,175.00
75-W1714	7294881	Rear:	900/60R42 R1W (TR)	
	7294799	Front:	600/65R34 R1W (TR)	5,173.00
75-W1743	7294881	Rear:	900/60R42 R1W (TR)	
	7294914	Front:	650/60R34 R1W (TR)	5,486.00

Rear: Single Steel Welded Wheel
Front: Waffle Wheel

75-W1525	7294859	Rear:	710/70R42 R1W (MI, GY, FI, TR)	
	7294756	Front:	480/70R34 R1W (MI, GY, FI, TR)	(3,251.00)

Order Code	Catalog Number	Description	Approx. Weight (lb.)	List Price

TIRES FOR MF 8732

FRONT AND REAR TIRES - REQUIRED - (CONTINUED)

Rear: Dual Row Crop Single Cast
Front: Waffle Wheel

75-Base	7294867	Duals:	480/80R50 R1W (MI, GY, FI, TR)	
	7294755	Front:	420/85R34 R1W (MI, GY, FI, TR)	**In Base**
75-W1414	7294864	Duals:	480/80R46 R1W (MI, GY, FI)	
	7294750	Front:	420/90R30 R1W (MI, GY, FI)	(1,635.00)
75-W1391	7294863	Duals:	520/85R42 R1W (MI, GY, FI)	
	7294750	Front:	420/90R30 R1W (MI, GY, FI)	(1,099.00)
75-W1744	7294869	Duals:	380/90R54 R1W (GY, FI, TR)	
	7294758	Front:	380/80R38 R1W (GY, FI, TR)	(199.00)
75-W1598	7294867	Duals:	480/80R50 R1W (MI, GY, FI, TR)	
	7294756	Front:	480/70R34 R1W (MI, GY, FI, TR)	1,163.00
75-W1722	7294867	Duals:	480/80R50 R1W (MI, GY, FI, TR)	
	7294758	Front:	380/80R38 R1W (MI, GY, FI, TR)	884.00
75-W1597	7294865	Duals:	520/85R46 R1W (MI, GY, FI, TR)	
	7294755	Front:	420/85R34 R1W (MI, GY, FI, TR)	475.00
75-W1418	7294865	Duals:	520/85R46 R1W (MI, GY, FI, TR)	
	7294756	Front:	480/70R34 R1W (MI, GY, FI, TR)	1,638.00
75-W1721	7294865	Duals:	520/85R46 R1W (MI, GY, FI, TR)	
	7294758	Front:	380/80R38 R1W (MI, GY, FI, TR)	1,359.00
75-W1404	7294868	Duals:	320/90R54 R1W (MI, GY, FI)	
	7294757	Front:	320/85R38 R1W (MI, GY, FI)	(1,314.00)
75-W1864	7294919	Duals:	VF480/80R46 R1W (MI)	
	7294917	Front:	VF380/85R34 R1W (MI)	TBA
75-W1865	7294920	Duals:	VF480/80R50 R1W (MI)	
	7294918	Front:	VF420/85R34 R1W (MI)	TBA
75-W1865	7294923	Duals:	IF480/80R50 R1W (FI)	
	7294922	Front:	IF420/85R34 R1W (FI)	TBA
*75-W1401	7294864	Duals:	480/80R46 R1W (MI, GY, FI, TR)	
	7294754	Front:	380/85R34 R1W (MI, GY, FI, TR)	(1,882.00)
*75-W1399	7294863	Duals:	520/85R42 R1W (MI, GY, FI, TR)	
	7294754	Front:	380/85R34 R1W (MI, GY, FI, TR)	(1,346.00)
*75-W1596	7294863	Duals:	520/85R42 R1W (MI, GY, TR)	
	7294749	Front:	420/85R30 R1W (MI, GY, TR)	(476.00)

***Requires Dealer Installed Front Duals ordered from Loose Accessories**

Rear: Dual Row Crop Single Cast
Front: Welded Steel

75-W1733	7294867	Duals:	480/80R50 R1W (MI, GY, TR)	
	7294796	Front:	600/70R28 R1W (MI, GY, TR)	2,264.00
75-W1746	7294865	Duals:	520/85R46 R1W (MI, GY, TR)	
	7294796	Front:	600/70R28 R1W (MI, GY, TR)	2,739.00

Field Installed Spacer Kit - Rear Wheels

	72517687JM	Dual Wheel Spacer Kit - 240mm	2,517.00

Order Code	Catalog Number	Description	Approx. Weight (lb.)	List Price

TIRES FOR MF 8735

TIRE BRAND SELECTION- REQUIRED

70-Blank	7294212	Factory Brand Choice	No Charge
70-T0001	7294195	Michelin Brand Required	1,552.00
70-T0002	7294196	Goodyear Brand Required	1,158.00
70-T0007	7294197	Firestone Brand Required	1,158.00
70-T0010	7294198	Trelleborg Brand Required	1,158.00

Note: Tire brand subject to change without notice unless a Brand is specified in Segment 70.
Tire Brand Availability is listed after each tire size.

FRONT AND REAR TIRES - REQUIRED*

***11 weeks out for changes on Jackson Built Models**

Rear: Single Steel Welded Wheel
Front: Welded Wheel

75-W1583	7294856	Rear:	650/85R38 R1W (MI, TR)	
	7294796	Front:	600/70R28 R1W (MI, TR)	(8,889.00)
75-W1585	7294857	Rear:	710/70R38 R1W (MI, GY, FI, TR)	
	7294795	Front:	600/65R28 R1W (MI, GY, FI, TR)	(6,474.00)
75-W1587	7294859	Rear:	710/70R42 R1W (MI, GY, TR)	
	7294796	Front:	600/70R28 R1W (MI, GY, TR)	(2,150.00)
75-W1561	7294878	Rear:	710/75R42 R1W (TR)	
	7294799	Front:	600/65R34 R1W (TR)	862.00
75-W1739	7294878	Rear:	710/75R42 R1W (TR)	
	7294914	Front:	650/60R34 R1W (TR)	1,175.00
75-W1714	7294881	Rear:	900/60R42 R1W (TR)	
	7294799	Front:	600/65R34 R1W (TR)	5,173.00
75-W1743	7294881	Rear:	900/60R42 R1W (TR)	
	7294914	Front:	650/60R34 R1W (TR)	5,486.00

Rear: Single Steel Welded Wheel
Front: Waffle Wheel

75-W1525	7294859	Rear:	710/70R42 R1W (MI, GY, FI, TR)	
	7294756	Front:	480/70R34 R1W (MI, GY, FI, TR)	(3,251.00)

Order Code	Catalog Number	Description	Approx. Weight (lb.)	List Price

TIRES FOR MF 8735

FRONT AND REAR TIRES - REQUIRED - (CONTINUED)

Rear: Dual Row Crop Single Cast
Front: Waffle Wheel

75-Base	7294867	Duals:	480/80R50 R1W (MI, GY, FI, TR)	
	7294755	Front:	420/85R34 R1W (MI, GY, FI, TR)	**In Base**
75-W1414	7294864	Duals:	480/80R46 R1W (MI, GY, FI)	
	7294750	Front:	420/90R30 R1W (MI, GY, FI)	(1,635.00)
75-W1391	7294863	Duals:	520/85R42 R1W (MI, GY, FI)	
	7294750	Front:	420/90R30 R1W (MI, GY, FI)	(1,099.00)
75-W1744	7294869	Duals:	380/90R54 R1W (GY, FI, TR)	
	7294758	Front:	380/80R38 R1W (GY, FI, TR)	(199.00)
75-W1598	7294867	Duals:	480/80R50 R1W (MI, GY, FI, TR)	
	7294756	Front:	480/70R34 R1W (MI, GY, FI, TR)	1,163.00
75-W1722	7294867	Duals:	480/80R50 R1W (MI, GY, FI, TR)	
	7294758	Front:	380/80R38 R1W (MI, GY, FI, TR)	884.00
75-W1597	7294865	Duals:	520/85R46 R1W (MI, GY, FI, TR)	
	7294755	Front:	420/85R34 R1W (MI, GY, FI, TR)	475.00
75-W1418	7294865	Duals:	520/85R46 R1W (MI, GY, FI, TR)	
	7294756	Front:	480/70R34 R1W (MI, GY, FI, TR)	1,638.00
75-W1721	7294865	Duals:	520/85R46 R1W (MI, GY, FI, TR)	
	7294758	Front:	380/80R38 R1W (MI, GY, FI, TR)	1,359.00
75-W1864	7294919	Duals:	VF480/80R46 R1W (MI)	
	7294917	Front:	VF380/85R34 R1W (MI)	TBA
75-W1865	7294920	Duals:	VF480/80R50 R1W (MI)	
	7294918	Front:	VF420/85R34 R1W (MI)	TBA
75-W1865	7294923	Duals:	IF480/80R50 R1W (FI)	
	7294922	Front:	IF420/85R34 R1W (FI)	TBA

Rear: Dual Row Crop Single Cast
Front: Welded Steel

75-W1733	7294867	Duals:	480/80R50 R1W (MI, GY, TR)	
	7294796	Front:	600/70R28 R1W (MI, GY, TR)	2,264.00
75-W1746	7294865	Duals:	520/85R46 R1W (MI, GY, TR)	
	7294796	Front:	600/70R28 R1W (MI, GY, TR)	2,739.00

Field Installed Spacer Kit - Rear Wheels

72517687JM	Dual Wheel Spacer Kit - 240mm	2,517.00

Order Code	Catalog Number	Description	Approx. Weight (lb.)	List Price

TIRES FOR MF 8737

TIRE BRAND SELECTION- REQUIRED

70-Blank	7294212	Factory Brand Choice	No Charge
70-T0001	7294195	Michelin Brand Required	1,552.00
70-T0002	7294196	Goodyear Brand Required	1,158.00
70-T0007	7294197	Firestone Brand Required	1,158.00
70-T0010	7294198	Trelleborg Brand Required	1,158.00

Note: Tire brand subject to change without notice unless a Brand is specified in Segment 70.
Tire Brand Availability is listed after each tire size.

FRONT AND REAR TIRES - REQUIRED*

***11 weeks out for changes on Jackson Built Models**

Rear: Single Steel Welded Wheel
Front: Welded Wheel

75-W1583	7294856	Rear:	650/85R38 R1W (MI, TR)	
	7294796	Front:	600/70R28 R1W (MI, TR)	(8,889.00)
75-W1587	7294859	Rear:	710/70R42 R1W (MI, GY, TR)	
	7294796	Front:	600/70R28 R1W (MI, GY, TR)	(2,150.00)
75-W1561	7294878	Rear:	710/75R42 R1W (TR)	
	7294799	Front:	600/65R34 R1W (TR)	862.00
75-W1739	7294878	Rear:	710/75R42 R1W (TR)	
	7294914	Front:	650/60R34 R1W (TR)	1,175.00
75-W1714	7294881	Rear:	900/60R42 R1W (TR)	
	7294799	Front:	600/65R34 R1W (TR)	5,173.00
75-W1743	7294881	Rear:	900/60R42 R1W (TR)	
	7294914	Front:	650/60R34 R1W (TR)	5,486.00

Rear: Single Steel Welded Wheel
Front: Waffle Wheel

75-W1525	7294859	Rear:	710/70R42 R1W (MI, GY, FI, TR)	
	7294756	Front:	480/70R34 R1W (MI, GY, FI, TR)	(3,251.00)

Order Code	Catalog Number	Description	Approx. Weight (lb.)	List Price

TIRES FOR MF 8737

FRONT AND REAR TIRES - REQUIRED - (CONTINUED)

Rear: Dual Row Crop Single Cast
Front: Waffle Wheel

75-Base	7294867	Duals:	480/80R50 R1W (MI, GY, FI, TR)	
	7294755	Front:	420/85R34 R1W (MI, GY, FI, TR)	**In Base**
75-W1414	7294864	Duals:	480/80R46 R1W (MI, GY, FI)	
	7294750	Front:	420/90R30 R1W (MI, GY, FI)	(1,635.00)
75-W1391	7294863	Duals:	520/85R42 R1W (MI, GY, FI)	
	7294750	Front:	420/90R30 R1W (MI, GY, FI)	(1,099.00)
75-W1744	7294869	Duals:	380/90R54 R1W (GY, FI, TR)	
	7294758	Front:	380/80R38 R1W (GY, FI, TR)	(199.00)
75-W1598	7294867	Duals:	480/80R50 R1W (MI, GY, FI, TR)	
	7294756	Front:	480/70R34 R1W (MI, GY, FI, TR)	1,163.00
75-W1722	7294867	Duals:	480/80R50 R1W (MI, GY, FI, TR)	
	7294758	Front:	380/80R38 R1W (MI, GY, FI, TR)	884.00
75-W1597	7294865	Duals:	520/85R46 R1W (MI, GY, FI, TR)	
	7294755	Front:	420/85R34 R1W (MI, GY, FI, TR)	475.00
75-W1418	7294865	Duals:	520/85R46 R1W (MI, GY, FI, TR)	
	7294756	Front:	480/70R34 R1W (MI, GY, FI, TR)	1,638.00
75-W1721	7294865	Duals:	520/85R46 R1W (MI, GY, FI, TR)	
	7294758	Front:	380/80R38 R1W (MI, GY, FI, TR)	1,359.00
75-W1864	7294919	Duals:	VF480/80R46 R1W (MI)	
	7294917	Front:	VF380/85R34 R1W (MI)	TBA
75-W1865	7294920	Duals:	VF480/80R50 R1W (MI	
	7294918	Front:	VF420/85R34 R1W (MI)	TBA
75-W1865	7294923	Duals:	IF480/80R50 R1W (FI)	
	7294922	Front:	IF420/85R34 R1W (FI)	TBA

Rear: Dual Row Crop Single Cast
Front: Welded Steel

75-W1733	7294867	Duals:	480/80R50 R1W (MI, GY, TR)	
	7294796	Front:	600/70R28 R1W (MI, GY, TR)	2,264.00
75-W1746	7294865	Duals:	520/85R46 R1W (MI, GY, TR)	
	7294796	Front:	600/70R28 R1W (MI, GY, TR)	2,739.00

Field Installed Spacer Kit - Rear Wheels

72517687JM	Dual Wheel Spacer Kit - 240mm	2,517.00

Order Code	Catalog Number	Description	Approx. Weight (lb.)	List Price

FACTORY INSTALLED OPTIONS

OPERATORS AREA

120-AQ004	7294167	Automatic Climate Control		1,072.00

ELECTRICAL

195-VG078	7295103	NightBlaze (Xenon) Cab Worklights -2 Front & 2 Rear		3,293.00

PIVOTING ADJUSTABLE FRONT FENDERS

155-WE110	7294204*	Standard Pivoting Front Fenders		1,633.00
155-WE111	7294205*	Wide Pivoting Front Fenders		1,926.00

***Heavy Duty Fixed / Suspended Front Axles are not compatible with 28" and 30" Waffle Rims with 60" and 64" tread settings when ordering Pivoting Front Fenders.**

INTEGRATED FRONT LINKAGE SYSTEM (IFLS)

230-FA000	Base	Integrated Belly Weight, Front Weigt Carrier, Less Front Hitch		**In Base**
230-F1136	7294262	5000 kg. (11,023 lbs.) Front Linkage, Two Sets of Hydraulic Couplers and Free Return Coupler		9,853.00
230-F1137	7294263	5000 kg. (11,023 lbs.) Front Linkage, Two Sets of Hydraulic Couplers and Free Return Coupler with 345kg Front Belly Weight		11,736.00
230-F1313	7294264	5000 kg. (11,023 lbs.) Front Linkage, Two Sets of Hydraulic Couplers and Free Return Coupler with Front PTO Anti-Clockwise rotation and 21 spline shaft (1000 rpm)		18,122.00

THREE POINT HITCH

85-GC210*	Base	Category III Fixed Top & Lower Links with Category III/IVN Quick Hitch		**In Base**
85-GC209	7294146	Category III Fixed Top and Lower Links		(1,544.00)

***Quick Hitch should be removed if using the 6 or 21 spline PTO shaft so that proper PTO to Hitch position is maintained. Not Compatible with Rear Fender Extensions (2M10 & 2M55 Fenders).**

DRAWBAR

95-YM242	Base	Category III Drawbar & Clevis		**In Base**
95-YM243	7294257	Category III Heavy Duty Drawbar & Clevis		608.00
95-YM246*	7294136	Category IV Drawbar & Clevis		893.00

***Category IV Drawbar only offered with 20 Spline PTO Shaft Option from the factory.**
Drawbar position for 6 & 21 spline shafts are not achievable with the Category IV Drawbar.
The 6 & 21 spline PTO shafts and Category III Drawbar can be ordered from Parts if required.

FACTORY INSTALLED OPTIONS- CONTINUED

MISCELLANEOUS OPTIONS

Order Code	Catalog Number	Description	Approx. Weight (lb.)	List Price
	5020425JM	CD Player, Bluetooth, Radio with Antenna & Speakers (MP3 Compatible)		**In Base**
	5020424JM	Antenna and Speakers		(195.00)
215-CB002	7294181	Engine Block Heater		146.00
90-GR000	7294259	Less Power Beyond		(716.00)
225-LQ001	7294191	Water Separator (Fuel Filter)		448.00
250-GS001	7294185	Hydraulic Trailer Brakes		1,036.00
250-GS067	7294187	Hydraulic & Pneumatic Trailer Brakes		7,810.00
275-TC005	7294210	French Language OIB and Decals		No Charge
275-TC011	7294211	Spanish Language OIB and Decals		No Charge

FACTORY INSTALLED WEIGHTS

345-YB003	7294270*	850 kg. (1,875 lbs.) Monoblock Weight		3,307.00
345-YB004	7294271*	1500 kg. (3,306 lbs.) Monoblock Weight		5,512.00
345-YB005	7294272*	2300 kg. (5,070 lbs.) Monoblock Weight		8,457.00

***Not Compatible with Front Weight Package**

325-RD040	7294192	Rear Wheel Weights, 2 x 250 kg. (550 lbs.)		1,791.00
325-RD041	7294200	Rear Wheel Weights, 4 x 250 kg. (550 lbs.)		3,582.00
325-RD042	7294201	Rear Wheel Weights, 6 x 250 kg. (550 lbs.)		3,692.00

REAR FENDER OPTIONS

255-WD210	Base	2.10M (78.75") Wide Rear Fenders		**In Base**
255-WD012	7294265	2.00M Wide Rear Fenders		(177.00)
255-WD344*	7294266	2.10M Wide Rear Fenders with Rear 70+100mm Side Extensions		301.00
255-WD365*	7294267	2.45M Wide Rear Fenders with Rear 100mm Side Extensions		796.00
255-WD374*	7294268	2.45M Wide Rear Fenders with Rear 45+100mm Side Extensions		876.00
255-WD379*	7294269	2.45M Wide Rear Fenders with Rear 70+100mm Side Extensions		920.00

*** Not Compatible with Quick Hitch**

Catalog Number	Description	Approx. Weight (lb.)	List Price
FACTORY INSTALLED WEIGHTS			
5020186JM	Front Weight Package, 8 x 55 kg (121 lbs.)	968	1,485.00
5020187JM	Front Weight Package, 10 x 55 kg (121 lbs.)	1210	1,857.00
5020188JM	Front Weight Package, 12 x 55 kg (121 lbs.)	1452	2,228.00
5020189JM	Front Weight Package, 14 x 55 kg (121 lbs.)	1694	2,600.00
5020190JM	Front Weight Package, 16 x 55 kg (121 lbs.)	1936	2,971.00
5020191JM	Front Weight Package, 18 x 55 kg (121 lbs.)	2178	3,342.00
5020192JM	Front Weight Package, 24 x 55 kg (121 lbs.)	2904	4,456.00
5020426JM	Rear Wheel Weights, 2 x 250 kg (551 lbs.) Includes Adapters and Hardware to mount weight to the 10 bolt hub (Steel Center Rim)		1,970.00
5020427JM	Rear Wheel Weights, 4 x 250 kg (551 lbs.) Includes Adapters and Hardware to mount one weight to the 10 bolt hub and one weight to the rim (opposite side) (Steel center rim)		3,940.00
5020202JM	Rear Wheel Weights, 2 x 250 kg (551 lbs.) Includes Hardware to mount weight to Cast Center Wheel or to previously mounted 250kg weight; Up to three weights can be mounted together.		1,970.00
DEALER INSTALLED FRONT OUTER TIRE AND WHEELS			
It is required that T0001 -- Michelin Brand, T0002 -- Goodyear Brand, T0007 -- Firestone, T0010 -- Trelleborg, be ordered for the factory to guarantee the correct tire brand is supplied on the tractor.			
5020360JM	320/85R38 R1W Michelin Agribib R.C. (143A8/143B) Waffle Rim		6,898.00
5020381JM	380/80R38 R1W Firestone Radial (142A8/142B) All Traction DT		6,959.00
5020396JM	380/80R38 R1W Goodyear DT800 (142A8/142B)		6,813.00
5020363JM	380/80R38 R1W Michelin Agribib (142A8/142B) Waffle Rim		7,243.00
5020378JM	420/85R34 R1W Firestone Radial (147A/147B) All Traction DT		6,904.00
5020393JM	420/85R34 R1W Goodyear Super Traction Radial (147A8/147B)		7,027.00
5020414JM	420/85R34 R1W Trelleborg TM600 (142A8/139B)		6,758.00
5020354JM	420/85R34 R1W Michelin Agribib (142A8/142B) Waffle Rim		7,168.00
5020399JM	420/90R30 R1W Goodyear DT800 (147A8/147B)		6,120.00
5020405JM	420/90R30 R1W Firestone Radial (145A8/145B) All Traction DT		6,194.00
5020345JM	420/90R30 R1W Michelin Agribib (147A8/147B) Waffle Rim		6,585.00
5020408JM	480/70R34 R1W Firestone Radial 9000 (155A8/155B)		7,410.00
5020402JM	480/70R34 R1W Goodyear DT812 (146A8/146B)		6,735.00
5020411JM	480/70R34 R1W Trelleborg TM700 (143A8/143B)		6,735.00
5020357JM	480/70R34 R1W Michelin Omnibib (143D) Waffle Rim		7,515.00
5020375JM	380/85R34 R1W Firestone Radial (137A8/137B) All Traction DT		5,870.00
5020390JM	380/85R34 R1W Goodyear DT800 (137A/137B)		6,589.00
5020372JM	380/85R34 R1W Trelleborg TM600 (137A8/137B)		7,165.00
5020351JM	380/85R34 R1W Michelin Agribib (137A8/137B) Waffle Rim		6,787.00
5020384JM	420/85R30 R1W Goodyear Super Traction Radial (144A/144B)		5,848.00
5020366JM	420/85R30 R1W Trelleborg TM600 (140A8/137B)		5,683.00
5020342JM	420/85R30 R1W Michelin Agribib (137A8/134B) Waffle Rim		5,972.00
SPACER KITS ARE REQUIRED TO INSTALL FRONT OUTERS			
72517923JM	15.5” Spacer Kit (To achieve 120" tread setting)		1,702.00
72517922JM	22.0” Spacer Kit		2,382.00

WHEEL TREAD SETTINGS

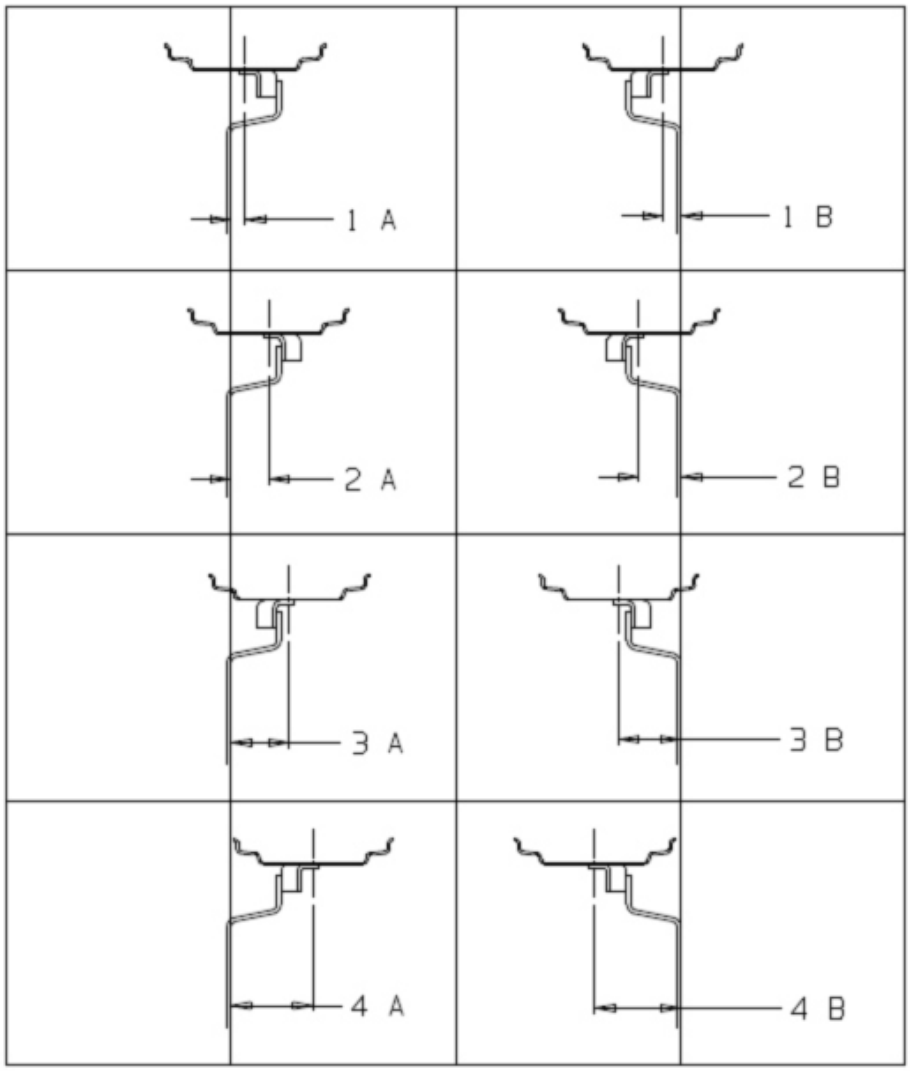

Position	Rims with Adjustable Disc	Track Width Reinforced Axle
Wheel Disc Facing Inwards	4A	61.4" (1560mm)
	3A	65.5" (1664mm)
	2A	69.4" (1764mm)
	1A	73.5" (1868mm)
Wheel Disc Facing Outward	1B	77.2" (1960mm)
	2B	81.3" (2064mm)
	3B	85.2" (2164mm)
	4B	89.3" (2268mm)

FRONT RIMS WITH WELDED DISKS:

Position	Rims with Welded Disc	Track Width Reinf. Axle
Wheel Disc Facing Inwards	1A	67.7" (1720mm)
Wheel Disc Facing Outward	1B	81.3" (2064mm)

WHEEL TREAD SETTINGS

REAR RIMS - SINGLE:

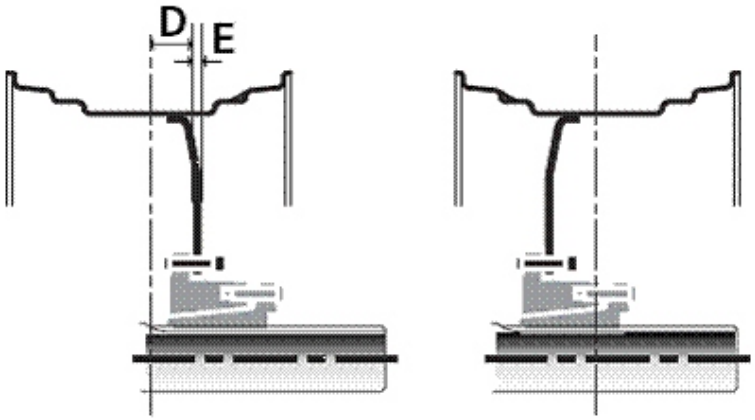

D = Rim offset 2.95" (75mm), E = Rim Disk thickness. 59" (15mm)		
	Disc Facing Inward (min/max)	**Disc Facing Outward (min/max)**
HA260 Short Bar Axle	70.1" (1780 mm) / 83.1" (2112 mm)	82.9" (2106 mm) / 96.0" (2438 mm)
HA260 Long Bar Axle	68.6" (1743 mm) / 112.7" (2862 mm)	81.5" (2069 mm) / 125.5" (3188 mm)

REAR RIMS - SINGLE:

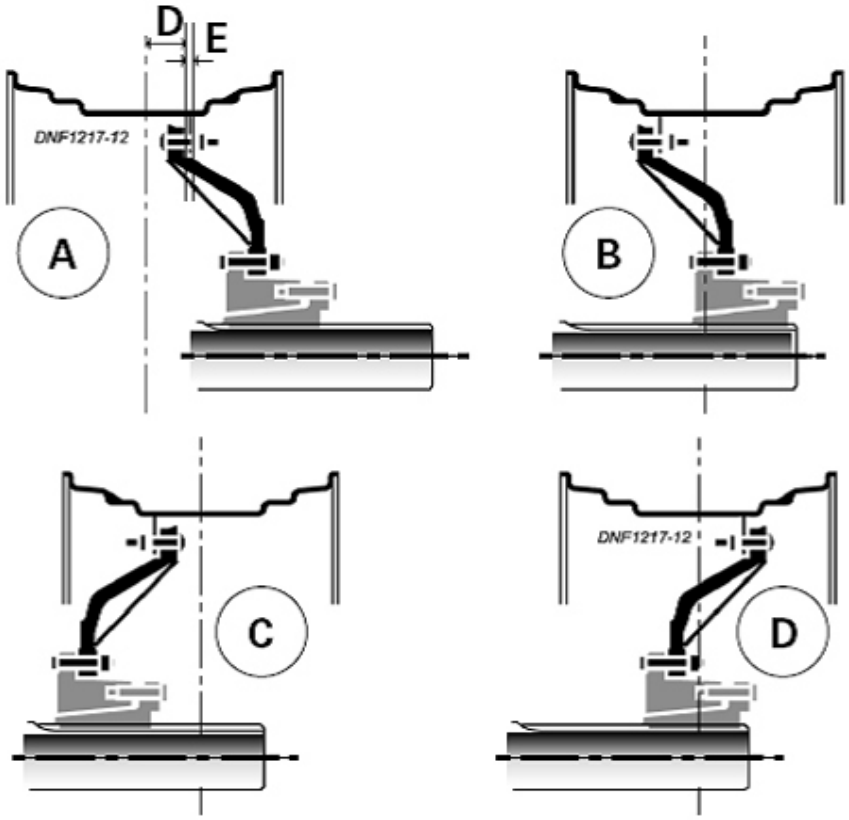

D = Rim offset 2.95" (75mm), E = Rim Disk thickness. 59" (15mm)		
	Disc Facing Inward (min/max)	**Disc Facing Outward (min/max)**
HA260 Short Bar Axle	A - 61.6" (1566 mm) / 74.7" (1898 mm)	D - 81.5" (2070 mm) / 94.6" (2402 mm)
	B - 74.5" (1892 mm) / 87.5" (2224 mm)	C - 94.3" (2396 mm) / 107.4" (2728 mm)
HA260 Long Bar Axle	A - 60.2" (1529 mm) / 104.2" (2648 mm)	D - 80.1" (2033 mm) / 124.1" (3152 mm)
	B - 73.0" (1855 mm) / 117.1" (2974 mm)	C - 92.9" (2359 mm) / 136.9" (3478 mm)

WHEEL TREAD SETTINGS

REAR RIMS - OUTER DUALS:

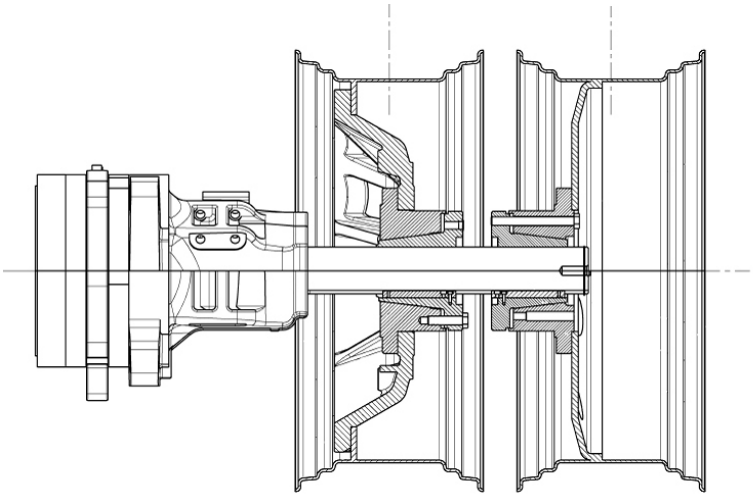

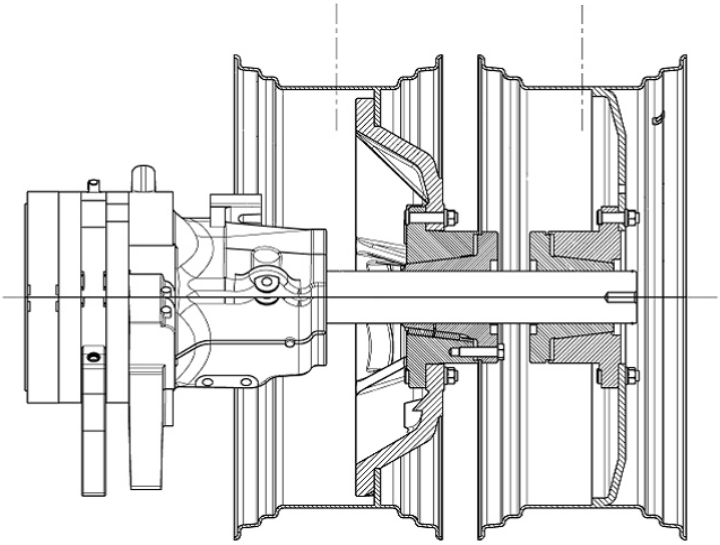

D = Rim offset 2.95" (75mm), E = Rim Disk thickness. 59" (15mm)		
	Disc Facing Inward (max)	**Disc Facing Outward (max)**
HA260 Long Bar Axle	112.7" (2862 mm)	125.5" (3188 mm)

MASSEY FERGUSON®

IMPLEMENTS

IMPLEMENTS INDEX

MASSEY FERGUSON®

PAGE

LOADERS 5
LOADER APPLICATION GUIDE 6

Loaders for Compact and Utility Tractors

MF DL95 COMPACT LOADER. 9
MF L105E COMPACT LOADER 10
MF DL125 COMPACT LOADER 11
MF DL135 COMPACT LOADER 13
MF L135E UTILITY LOADER 15
MF 911X UTILITY LOADER 17
MF 921X UTILITY LOADER 19
MF 926X UTILITY LOADER 21
MF 931X UTILITY LOADER 23
MF 936X UTILITY LOADER 25

Loaders for Mid-Range and High Horse Power Tractors

MF 931 LOADER 27
MF 941 / MF 946 LOADER 31
MF 951 / MF 956 LOADER 35
MF 961 / MF 968 LOADER 39
MF 978 LOADER 43
MF 988 LOADER 47
FIELD INSTALLED LOADER OPTIONS 50

Prior Series Loaders

MF L90 COMPACT LOADER (Subject to Availability) 53
MF L100 COMPACT LOADER (Subject to Availability) 55
MF DL120 COMPACT LOADER (Subject to Availability) 57
MF DL130 COMPACT LOADER (Subject to Availability) 59
MF L210 LOADER (Subject to Availability) 61
MF DL260 LOADER (Subject to Availability) 65
MF DL260MSL LOADER (Subject to Availability) 69
MF DL280 LOADER (Subject to Availability) 73

Non-Current Loader Accessories for Compact and Utility Tractors

NON-CURRENT LOADER APPLICATION CHART. 75
MFDL100, MFDL250 AND MFDL280 COMPACT LOADER ACCESSORIES (Subject to Availability) 76

IMPLEMENTS
INDEX

PAGE

MOWERS 81

MOWER APPLICATION CHART 82
MF2315, MF2320, MF2325 (Subj to Availability), MF2326 MOWER 83
MF1505 MID-MOUNT MOWER. 85
MF1705 MID-MOUNT MOWER. 87

BACKHOES 89

BACKHOE APPLICATION CHART 90
MF CB10 BACKHOE (Subj to Availability) 91
MF CB20 BACKHOE (Subj to Availability) 93

FRONT MOUNTED 95

FRONT MOUNTED APPLICATION CHART 96
MF 2335 AND 2340 BLADE. 97
MF 1405 FRONT DOZER BLADE 98
MF 1545 FRONT DOZER BLADE 99
MF 1550 FRONT DOZER BLADE 100
MF 2360 SNOW BLOWER 101
MF 1410 SNOW BLOWER 102
MF 1507 SNOW BLOWER 103
MF 2330 ROTARY BROOM 104
MF 1415 ROTARY BROOM (Subj to Availability) 105
MF 1535 ROTARY BROOM 106

MASSEY FERGUSON®

RESERVED

MASSEY FERGUSON®

LOADERS

LOADER APPLICATION CHART

MASSEY FERGUSON®

Note: For specific tractor/loader applications and loader attachment/accessories, refer to loader price pages.

Newly Introduced

TRACTOR MODEL	DL95 Loader	L105E Loader	DL125 Loader	DL135 Loader
GC1705, 1710, 1715, 1720	X			
1726E, 1734E, 1739E		X		
1736, 1742			X	
1749, 1754, 1758, 1759				X

Subject to Availability

TRACTOR MODEL	L90 Loader	L100 Loader	DL120 Loader	DL130 Loader
1526	X			
1529, 1532, 1726E, 1734E, 1739E		X		
1736, 1742			X	
1749, 1754 1759				X

LOADER APPLICATION CHART

Note: For specific tractor/loader applications and loader attachment/accessories, refer to loader price pages.

Newly Introduced

TRACTOR MODEL	L135E Loader	MF 911X Loader	MF 921X Loader Non Self-Leveling	MF 926X Loader Mechanical Self-Leveling	MF 931X Loader Non Self-Leveling	MF 936X Loader Mechanical Self-Leveling
2605 2615, 2635	2WD ONLY					
		4WD ONLY				
4608			2WD AND 4WD MODELS			
4608				2WD AND 4WD MODELS		
4609, 4610					2WD AND 4WD MODELS	
4609, 4610						2WD AND 4WD MODELS

Subject to Availability

TRACTOR MODEL	L210 Loader	DL260 Loader	DL260MSL Loader	DL280 Loader (2-3/4 in Lift)
4609, 4610		2WD AND 4WD MODELS	2WD AND 4WD MODELS	
2605, 2615	2WD ONLY			
2635	2WD ONLY			
5460, 5470, 5480				2WD AND 4WD MODELS
5450		2WD AND 4WD MODELS	2WD AND 4WD MODELS	

LOADER APPLICATION CHART
(Current Loader Models)

TRACTOR MODEL	MF931 Loader	MF941 Loader	MF946 Loader	MF951 Loader	MF956 Loader	MF961 Loader	MF968 Loader	MF978 Loader	MF988 Loader
MF5450 MF5609 MF5610	X	X	X						
MF5611 MF5612 MF5613		X	X						
MF5445 MF5455 MF5460		X	X						
MF5470 MF5480				X	X				
MF6614 MF6615 MF6616				X	X				
MF7465 MF7475 MF7480 MF7614 MF7615 MF7616 MF7618						X	X		
MF7619 MF7620 MF7622								X	
MF7624 MF7626 MF8600 Series									X

Mississippi State Contract Discount: 10%

MF DL95 COMPACT LOADER

QUICK ATTACH MOUNT LOADER

MASSEY FERGUSON®

(F.O.B. TELFORD, TN)

FEATURES

- One Piece Main Frame with Tapered Arms and Single Cross Member
- Quick Attach Loader Frame Mount with Pin Lock
- Built-in Parking Stands
- (2) 1.6 inch Double Acting Lift Cylinders
- (2) 1.75 inch Double Acting Bucket Cylinders
- Regenerative Hydraulics for Simultaneous Operation of Lift/Lower and Curl/Dump Functions
- Hydraulic Lines Routed Inside Main Frame for Protection and Visibility
- Galvanized Steel Bushings with Recessed Grease Points
- 48-inch Standard Duty Pin-Type Bucket
- Grille Guard Standard
- Maximum Lift Height: 72.8 Inches
- Lift Capacity to Full Height @ 19.6 inches Forward of Pivot Pin: 580 lbs
- Breakout Force: 920 lbs
- Rated Hydraulic Pressure: 1914 PSI
- Fits all GC1700 Series Tractors

Note: Tractors must be properly ballasted for loader operation. See Operator's Manual for information.

Note: Specifications may vary between tractor models, tires and hydraulic options.

Order Code	Catalog Number	Description	Approx. Weight (lb.)	List Price
		For a Complete Loader, Select One Order Code from Group 01 through Group 03		
		For Buckets and Accessories Order as Required From Groups 04 and 05		
BASE MACHINE				**Group 01**
ZL09A1E 0L000M	72533625	MF DL95 Base Loader - Pin Type Style, ... Includes Hoses	275	1,870.00
SUBFRAME MOUNTING KIT				**Group 02**
	72533646M	Subframe Kit and Grille Guard for GC1700 Series Tractors . .	115	500.00
HYDRAULICS				**Group 03**
	72533661M	Hydraulic Valve Kit for GC1705 Non-Factory Valves . . . . . (Includes Hoses to Base Loader) **NOT AVAILABLE UNTIL Q1 2015**	60	763.00
BUCKETS - OPTIONAL				**Group 04**
	72533674M	48-inch Pin Type Material Bucket	135	450.00
ACCESSORIES - OPTIONAL				**Group 05**
	72533706M	Front Weight Bracket Kit (Requires Grille Guard)		115.00

Mississippi State Contract Discount: 10%

MF L105E COMPACT LOADER

QUICK ATTACH MOUNT LOADER

(F.O.B. TELFORD, TN)

MASSEY FERGUSON®

FEATURES

- One Piece Main Frame with Tapered Arms and Single Cross Member
- Quick Attach Loader Frame Mount with Pin Lock
- Built-in Parking Stands
- (2) 2.0 inch Double Acting Lift Cylinders
- (2) 2.2 inch Double Acting Bucket Cylinders
- Hydraulic Lines Routed Inside Main Frame for Protection and Visibility
- Galvanized Steel Bushings with Recessed Grease Points
- Skid Steer or Pin-Type Implement Attachments
- Grille Guard Standard
- Fits all MF1700E Series Economy Compact Tractor Models with R1 AG, R3 Turf or R4 Industrial Tires
- Maximum Lift Height: 95.7 inches at Pivot
- Lift Capacity to Full Height @ 19.6 inches Forward of Pivot Pin: 830 lbs
- Breakout Force: 1460 lbs
- Rated Hydraulic Pressure: 2132 PSI

Note: Tractors must be properly ballasted for loader operation. See Operator's Manual for information.

Note: Specifications may vary between tractor models, tires and hydraulic options.

Order Code	Catalog Number	Description	Approx. Weight (lb.)	List Price
		For a Complete Loader, Select One Order Code from Group 01 through Group 03		
		For Buckets and Accessories Order as Required From Groups 04 and 05		
BASE MACHINE				**Group 01**
ZL13A1E 0W000M	72533627	MF L105E Base Loader - Pin Type Style		2,108.00
SUBFRAME MOUNTING KIT				**Group 02**
	72533647M	Subframe Kit and Grille Guard for MF1726E, MF1734E and MF1739E Tractors	200	971.00
HYDRAULICS				**Group 03**
	72533662M	Direct Control Valve Kit (Includes Hoses to Base Loader)	60	815.00
BUCKETS - OPTIONAL				**Group 04**
	72533678M	60-inch Skid Steer Material Bucket (Requires 72533709M)	195	650.00
	72533675M	60-inch Pin Type Material Bucket	195	650.00
ACCESSORIES - OPTIONAL				**Group 05**
	72533709M	Skid Steer Type Bucket Quick Attach Tool Carrier Kit		551.00
	72533711M	Front Weight Bracket Kit (Requires Grille Guard)		125.00

Mississippi State Contract Discount: 10%

MF DL125 COMPACT LOADER

QUICK ATTACH MOUNT LOADER

MASSEY FERGUSON®

(F.O.B. TELFORD, TN)

FEATURES

- One Piece Main Frame with Tapered Arms and Single Cross Member
- Quick Attach Loader Frame Mount with Pin Lock
- Built-in Parking Stands
- (2) 2.4 inch Double Acting Lift Cylinders
- (2) 2.4 inch Double Acting Bucket Cylinders
- Hydraulic Lines Routed Inside Main Frame for Protection and Visibility
- 3rd Function Capable, Soft-Drive Capable
- Galvanized Steel Bushings with Recessed Grease Points
- Universal Skid Steer or Alo-exclusive Compact Quick Attach Implement Attachment Designs
- Grille Guard Standard
- Fits MF1736 and MF1742 Compact Tractor Models with R1 AG, R3 Turf, or R4 Industrial Tires
- Maximum Lift Height: 102.4 Inches at Pivot
- Lift Capacity to Full Height @ 19.6 inches Forward of Pivot Pin: 1300 lbs
- Breakout Force: 2190 lbs
- Rated Hydraulic Pressure: 2277 PSI

Note: Tractors must be properly ballasted for loader operation. See Operator's Manual for information.

Note: Specifications may vary between tractor models, tires and hydraulic options.

Order Code	Catalog Number	Description	Approx. Weight (lb.)	List Price
		For a Complete Loader, Select One Order Code from Group 01 through Group 03		
		For Additional Hydraulics, Buckets and Accessories Order as Required From Groups 04 through 07		
BASE MACHINE				**Group 01**
ZL16N1E 1W000M	72533629	MF DL125 Base Loader - Skid Steer Style	500	2,744.00
ZL16N1E 2W000M	72533630	MF DL125 Base Loader - Compact Quick Attach Style	470	2,513.00
SUBFRAME MOUNTING KIT				**Group 02**
	72533648M	Subframe Kit with Grille Guard for MF1736 and 1742 Tractors	235	1,295.00
HYDRAULICS				**Group 03**
	72533663M	Mid-Mount Hose Kit for MF1700 Series Tractors (Required to connect loader steel lines to factory installed tractor mid-valves)	10	182.00
ADDITIONAL HYDRAULIC OPTIONS				**Group 04**
	72533665M	Soft Drive Ride Control System	20	557.00
	72533666M	Third Function Valve with Deutsch Connector (Requires Wiring Harness 72533667M)	20	740.00
	72533667M	Wiring Harness for Third Function (with Knob)	2	175.00

MF DL125 COMPACT LOADER

QUICK ATTACH MOUNT LOADER

MASSEY FERGUSON®

Order Code	Catalog Number	Description	Approx. Weight (lb.)	List Price
BUCKETS - OPTIONAL				**Group 05**
	72533679M	66-inch Skid Steer Material Bucket	212	900.00
	72533680M	72-inch Skid Steer Material Bucket	228	950.00
	72533681M	66-inch Compact Quick Attach Material Bucket	212	800.00
	72533682M	72-inch Compact Quick Attach Material Bucket	228	850.00
ATTACHMENTS - COMPACT CARRIER TYPE - OPTIONAL				**Group 06**
	72533695M	Round Bale Spike for Skid Steer	144	678.00
	72533691M	38-inch Compact Quick Attach Pallet Fork 2,205 lbs (1000 kg) Capacity	325	875.00
	72533696M	Round Bale Spike for Compact Quick Attach	144	616.00
ACCESSORIES - OPTIONAL				**Group 07**
	72533732M	Weld-On Hook Kit for Compact Quick Attach		160.00
	72533711M	Front Weight Bracket Kit (Requires Grille Guard)		125.00

Mississippi State Contract Discount: 10%

MF DL135 COMPACT LOADER

QUICK ATTACH MOUNT LOADER

MASSEY FERGUSON®

(F.O.B. TELFORD, TN)

FEATURES

- One Piece Main Frame with Tapered Arms and Single Cross Member
- Quick Attach Loader Frame Mount with Pin Lock
- Built-in Parking Stands
- (2) 2.75 inch Double Acting Lift Cylinders
- (2) 2.75 inch Double Acting Bucket Cylinders
- Hydraulic Lines Routed Inside Main Frame for Protection and Visibility
- 3rd Function Capable, Soft-Drive Capable
- Galvanized Steel Bushings with Recessed Grease Points
- Universal Skid Steer or Alo-exclusive Compact Quick Attach Implement Attachment Designs
- Grille Guard Standard
- Fits MF1749, 1754, 1758, 1759 Compact Tractor Models with R1 AG, R3 Turf, or R4 Industrial Tires
- Maximum Lift Height: 110.2 Inches at Pivot
- Lift Capacity to Full Height @ 19.6 inches Forward of Pivot Pin: 1760 lbs
- Breakout Force: 2870 lbs
- Rated Hydraulic Pressure: 2277 PSI

Note: Tractors must be properly ballasted for loader operation. See Operator's Manual for information.

Note: Specifications may vary between tractor models, tires and hydraulic options

Order Code	Catalog Number	Description	Approx. Weight (lb.)	List Price
		For a Complete Loader, Select One Order Code from Group 01 through Group 03		
		For Additional Hydraulics, Buckets and Accessories Order as Required From Groups 04 through 07		
BASE MACHINE				**Group 01**
ZL18N1E 1W000M	72533632	MF DL135 Base Loader - Skid Steer Style	670	3,441.00
ZL18N1E 2W000M	72533633	MF DL135 Base Loader - Compact Quick Attach Style	655	3,045.00
SUBFRAME MOUNTING KITS				**Group 02**
	72533651M	Subframe Kit for MF1749 Tractors	295	1,595.00
	72533652M	Subframe Kit for MF1754 and 1758 Tractors	285	1,595.00
	72533653M	Subframe Kit for MF1754 and 1758 Hydro Tractors	300	1,595.00
	72533654M	Subframe Kit for MF1759	305	1,595.00
HYDRAULICS				**Group 03**
	72533663M	Mid-Mount Hose Kit for MF1700 Series Tractors (Required to connect loader steel lines to factory installed tractor mid-valves)	10	182.00
ADDITIONAL HYDRAULIC OPTIONS				**Group 04**
	72533665M	Soft Drive Ride Control System	20	557.00
	72533666M	Third Function Valve with Deutsch Connector (Requires Wiring Harness 72533667M)	20	740.00
	72533667M	Wiring Harness for Third Function (with Knob)	2	175.00

Mississippi State Contract Discount: 10%

MF DL135 COMPACT LOADER

QUICK ATTACH MOUNT LOADER

MASSEY FERGUSON®

Order Code	Catalog Number	Description	Approx. Weight (lb.)	List Price
BUCKETS - OPTIONAL				**Group 05**
	72533680M	72-inch Skid Steer Material Bucket	228	950.00
	72533682M	72-inch Compact Quick Attach Material Bucket	228	850.00
ATTACHMENTS - OPTIONAL				**Group 06**
	72533690M	38-inch Skid Steer Pallet Fork 2,205 lbs (1000 kg) Capacity	350	975.00
	72533695M	Round Bale Spike for Skid Steer	144	678.00
	72533691M	38-inch Compact Quick Attach Pallet Fork 2,205 lbs (1000 kg) Capacity	325	875.00
	72533696M	Round Bale Spike for Compact Quick Attach	144	616.00
ACCESSORIES - OPTIONAL				**Group 07**
	72533732M	Weld-On Hook Kit for Compact Quick Attach		160.00
	72533711M	Front Weight Bracket Kit (Requires Grille Guard)		125.00

Mississippi State Contract Discount: 10%

MF L135E UTILITY LOADER

QUICK ATTACH MOUNT LOADER

MASSEY FERGUSON®

(F.O.B. TELFORD, TN)

FEATURES

- One Piece Main Frame with Tapered Arms and Single Cross Member
- Quick Attach Loader Frame Mount with Pin Lock
- Built-in Parking Stands
- (2) 2.75 inch Double Acting Lift Cylinders
- (2) 2.75 inch Double Acting Bucket Cylinders
- Hydraulic Valves with Integrated Joystick Mount to Right Side Loader Subframe
- Hydraulic Lines Routed Inside Main Frame for Protection and Visibility
- Galvanized Steel Bushings with Recessed Grease Points
- Universal Skid Steer or Pin-Type Implement Attachments
- Grille Guard Standard
- Fits all MF2600 Series 2wd Tractor Models with R1 AG or R4 Industrial Tires
- Maximum Lift Height: 110.2 Inches at Pivot
- Lift Capacity to Full Height @ 19.6 inches Forward of Pivot Pin: 1770 lbs
- Breakout Force: 2870 lbs
- Rated Hydraulic Pressure: 2277 PSI

Note: Tractors must be properly ballasted for loader operation. See Operator's Manual for information.

Note: Specifications may vary between tractor models, tires and hydraulic options.

Order Code	Catalog Number	Description	Approx. Weight (lb.)	List Price
		For a Complete Loader, Select One Order Code from Group 01 through Group 03		
		For Buckets and Accessories Order as Required From Groups 04 through 06		
BASE MACHINE				**Group 01**
ZL18A1E 0W000M	72533631	MF L135E Base Loader - Pin Type Style	570	2,739.00
SUBFRAME MOUNTING KITS				**Group 02**
	72533655M	Subframe Kit for MF2605 and MF2615 - 3 Cylinder 2wd with Grille Guard	405	789.00
	72533656M	Subframe Kit for MF2635 - 4 Cylinder 2wd with Grille Guard	475	753.00
HYDRAULICS				**Group 03**
	72533668M	Direct Control Valve Kit (Includes Hoses to Base Loader)	60	925.00

MF L135E UTILITY LOADER

QUICK ATTACH MOUNT LOADER

MASSEY FERGUSON®

Order Code	Catalog Number	Description	Approx. Weight (lb.)	List Price
BUCKETS - OPTIONAL				**Group 04**
	72533680M	72-inch Skid Steer Material Bucket (Requires 72533709M) . .	228	950.00
	72533677M	72-inch Pin Type Material Bucket	230	900.00
ATTACHMENTS - OPTIONAL				**Group 05**
	72533690M	38-inch Skid Steer Pallet Fork . . . . . 2,205 lbs (1000 kg) Capacity	350	975.00
	72533695M	Round Bale Spike for Skid Steer	144	678.00
ACCESSORIES - OPTIONAL				**Group 06**
	72533709M	Skid Steer Type Bucket Quick Attach Tool Carrier Kit		551.00
	72533711M	Front Weight Bracket Kit (Requires Grille Guard)		125.00

Mississippi State Contract Discount: 10%

MF 911X LOADER

NON SELF-LEVELING

MASSEY FERGUSON®

(F.O.B. TELFORD, TN)

FEATURES

- One Piece Main Frame with Tapered Arms and Single Cross Member
- Quick Attach Loader Frame Mount with Pin Lock
- Built-in Parking Stands
- (2) 2.4 inch Double Acting Lift Cylinders
- (2) 2.4 inch Double Acting Bucket Cylinders
- Hydraulic Lines Routed Inside Main Frame for Protection and Visibility
- Galvanized Steel Bushings with Recessed Grease Points
- Universal Skid Steer or Euro Hook Type Implement Attachments
- Grille Guard Standard
- Fits all MF2600 Series 4wd Tractors
- Rated on MF2635 Tractor with 9.5-24 Front Tires and 16.9-28 Rear Tires
- Lift Capacity to Full Height @ 31.5 inches Forward of Pivot Pin: 1510 lbs
- Maximum Lift Height: 115 inches at Pivot
- Breakout Force: 2750 lbs
- Rated Hydraulic Pressure: 2755 PSI

Note: Tractors must be properly ballasted for loader operation. See Operator's Manual for information.

Note: Specifications may vary between tractor models, tires and hydraulic options.

Order Code	Catalog Number	Description	Approx. Weight (lb.)	List Price
		For a Complete Loader, Select One Order Code from Group 01 through Group 03		
		For Additional Hydraulics, Buckets and Accessories Order as Required From Groups 04 through 07		
BASE MACHINE				**Group 01**
XL11N1D 1200M	72533634	MF 911X Base Loader - Skid Steer Style	660	3,696.00
XL11N1D 8200M	72533635	MF 911X Loader - Euro Style	650	3,300.00
SUBFRAME MOUNTING KIT				**Group 02**
	72533657M	Subframe Kit for MF2600 Series 4wd Tractors	510	1,447.00
HYDRAULICS				**Group 03**
	72533669M	Direct Control Valve Kit (Includes Intermediate Hoses to Base Loader)	60	1,026.00
ADDITIONAL HYDRAULIC OPTIONS				**Group 04**
	72533672M	Third Function Valve with Deutsch Connector (Requires Wiring Harness 72533729M)	20	843.00
	72533729M	Wiring Harness for Third Function (with Buttons)	2	120.00

MF 911X LOADER

NON SELF-LEVELING

MASSEY FERGUSON®

Order Code	Catalog Number	Description	Approx. Weight (lb.)	List Price
BUCKETS - OPTIONAL				**Group 05**
		Skid Steer Style		
	72533683M	72-inch Skid Steer Material Bucket 180U, 25 cu ft	390	1,100.00
	72533684M	84-inch Skid Steer Material Bucket 210U, 29 cu ft	437	1,200.00
		Euro Style		
	72533685M	72-inch Euro Style Material Bucket 180U, 25 cu ft	390	950.00
	72533686M	84-inch Euro Style Material Bucket 210U, 29 cu ft	437	1,050.00
ATTACHMENTS - OPTIONAL				**Group 06**
		Skid Steer Style		
	72533692M	48-inch Pallet Fork - 3,520 lbs (1,600 kg) Capacity	425	1,155.00
	72533695M	Round Bale Spike	144	678.00
		Euro Style		
	72556283M	48-inch Pallet Fork - 3,520 lbs (1,600 kg) Capacity	403	1,029.00
	72556073M	Round Bale Spike	144	683.00
ACCESSORIES - OPTIONAL				**Group 07**
	72533693M	Log Grab (Requires 48-inch Pallet Fork)	185	1,765.00
	72556070M	Weld-On Hook Kit for Euro Tool Carrier	30	231.00

Mississippi State Contract Discount: 10%

MF 921X LOADER

NON SELF-LEVELING

MASSEY FERGUSON®

(F.O.B. Telford, TN)

FEATURES

- One Piece Main Frame with Tapered Arms and Single Cross Member
- Quick Attach Loader Frame Mount with Pin Lock
- Built-in Parking Stands
- (2) 2.6 inch Double Acting Lift Cylinders
- (2) 2.6 inch Double Acting Bucket Cylinders
- Hydraulic Lines Routed Inside Main Frame for Protection and Visibility
- Galvanized Steel Bushings with Recessed Grease Points
- Universal Skid Steer or Euro Hook Type Implement Attachments
- Grille Guard Standard
- Fits MF4608 2wd and 4wd Tractor Models
- Rated on MF4608 Tractor with 9.5-24 Front Tires and 16.9-30 Rear Tires
- Lift Capacity to Full Height @ 31.5 inches Forward of Pivot Pin: 1920 lbs
- Maximum Lift Height: 124 inches at Pivot
- Breakout Force: 3200 lbs
- Rated Hydraulic Pressure: 2828 PSI

Note: Tractors must be properly ballasted for loader operation. See Operator's Manual for information.

Note: Specifications may vary between tractor models, tires and hydraulic options.

Order Code	Catalog Number	Description	Approx. Weight (lb.)	List Price
		For a Complete Loader, Select One Order Code from Group 01 through Group 03		
		For Additional Hydraulics, Buckets and Accessories Order as Required From Groups 04 through 07		
BASE MACHINE				**Group 01**
XL21N1D 1200M	72533638	MF921X Base Loader - Skid Steer Style	810	3,978.00
XL21N1D 8200M	72533639	MF921X Base Loader - Euro Style	800	3,582.00
SUBFRAME MOUNTING KIT				**Group 02**
	72533658M	Subframe Kit for MF4608 Tractor Models	375	1,522.00
LIGHT RELOCATION KIT				
	72533750M	Light Relocation Kit for MF4600 Series Cab Tractors (Required for ALL Cabs)	15	30.00
HYDRAULICS				**Group 03**
	72533670M	Mid-Mount Hose Kit for MF4600 Tractors	15	357.00
ADDITIONAL HYDRAULIC OPTIONS				**Group 04**
	72530394M	Dealer Installed Loader Joystick and Mid Valves for use with MF4600 Series Tractors WITHOUT Factory Joystick and Mid Valves **(Order separately from Loader)**		1,313.00
	72533671M	Soft Drive Ride Control System	10	557.00
	72533672M	Third Function Valve with Deutsch Connector (Requires Wiring Harness 72533673M)	20	843.00
	72533673M	Wiring Harness for Third Function	1	165.00

MF 921X LOADER

NON SELF-LEVELING

MASSEY FERGUSON®

Order Code	Catalog Number	Description	Approx. Weight (lb.)	List Price
BUCKETS - OPTIONAL				**Group 05**
	72533683M	72-inch Skid Steer Material Bucket 180U, 25 cu ft	390	1,100.00
	72533684M	84-inch Skid Steer Material Bucket 210U, 29 cu ft	437	1,200.00
	72533688M	72-inch Skid Steer Material Bucket 185S, 25 cu ft	401	1,350.00
	72533689M	84-inch Skid Steer Material Bucket 210S, 29 cu ft	505	1,550.00
	72533685M	72-inch Euro Style Material Bucket 180U, 25 cu ft	390	950.00
	72533686M	84-inch Euro Style Material Bucket 210U, 29 cu ft	437	1,050.00
	72556222M	72-inch Euro Style Material Bucket 185S, 29 cu ft	401	1,250.00
	72556223M	84-inch Euro Style Material Bucket 210S, 29 cu ft	505	1,450.00
ATTACHMENTS - OPTIONAL				**Group 06**
		Skid Steer Style		
	72533692M	48-inch Pallet Fork - 3,520 lbs (1,600 kg) Capacity	425	1,155.00
	72533695M	Round Bale Spike	144	678.00
	72533697M	Big Bale Fork with Extension	288	995.00
		Euro Style		
	72556283M	48-inch Pallet Fork - 3,520 lbs (1,600 kg) Capacity	403	1,029.00
	72556073M	Round Bale Spike	144	683.00
	72556285M	Big Bale Fork with Extension	271	966.00
		Euro Style - Requires Third Function		
	72533698M	Uni-Grip 160	530	2,495.00
	72556264M	63-inch FlexiGrip 160 with Extension (for Round Bales)	610	2,741.00
ACCESSORIES - OPTIONAL				**Group 07**
	72533693M	Log Grab (Requires 48-inch Pallet Fork)	185	1,765.00
	72533694M	Hydraulic Fork Shift Kit for 48-inch Pallet Forks (Requires Third Function)	150	1,295.00
	72556121M	Bolt-On Utility Grapple (Only Compatible with 185S and 210S Buckets)	440	2,117.00
	72556070M	Weld-On Hook Kit for Euro Tool Carrier	30	231.00

Mississippi State Contract Discount: 10%

MF 926X LOADER

MECHANICAL SELF-LEVELING

MASSEY FERGUSON®

(F.O.B. Telford, TN)

FEATURES

- One Piece Main Frame with Tapered Arms and Single Cross Member
- Mechanical Self-Leveling Loader
- Quick Attach Loader Frame Mount with Pin Lock
- Built-in Parking Stands
- (2) 2.4 inch Double Acting Lift Cylinders
- (2) 2.6 inch Double Acting Bucket Cylinders
- Hydraulic Lines Routed Inside Main Frame for Protection and Visibility
- Galvanized Steel Bushings with Recessed Grease Points
- Universal Skid Steer or Euro Hook Type Implement Attachments
- Grille Guard Standard)
- Fits MF4608 2wd and 4wd Tractor Models
- Rated on MF4608 Tractor with 9.5-24 Front Tires and 16.9-30 Rear Tires
- Lift Capacity to Full Height @ 31.5 inches Forward of Pivot Pin: 2680 lbs
- Maximum Lift Height: 124 inches at Pivot
- Breakout Force: 3480 lbs
- Rated Hydraulic Pressure: 2828 PSI

Note: Tractors must be properly ballasted for loader operation. See Operator's Manual for information.

Note: Specifications may vary between tractor models, tires and hydraulic options.

Order Code	Catalog Number	Description	Approx. Weight (lb.)	List Price
		For a Complete Loader, Select One Order Code from Group 01 through Group 03		
		For Additional Hydraulics, Buckets and Accessories Order as Required From Groups 04 through 07		
BASE MACHINE				**Group 01**
XL26P1D 1200MM	72533640	MF926X Base Loader - Skid Steer Style	800	4,903.00
XL26P1D 8200MM	72533641	MF926X Base Loader - Euro Style	790	4,507.00
SUBFRAME MOUNTING KIT				**Group 02**
	72533658M	Subframe Kit for MF4608 Tractor Models	375	1,522.00
LIGHT RELOCATION KIT				
	72533750M	Light Relocation Kit for MF4600 Series Cab Tractors (Required for ALL Cabs)	15	30.00
HYDRAULICS				**Group 03**
	72533670M	Mid-Mount Hose Kit for MF4600 Tractors	15	357.00
ADDITIONAL HYDRAULIC OPTIONS				**Group 04**
	72530394M	Dealer Installed Loader Joystick and Mid Valves for use with MF4600 Series Tractors WITHOUT Factory Joystick and Mid Valves **(Order separately from Loader)**		1,313.00
	72533671M	Soft Drive Ride Control System	10	557.00
	72533730M	Third Function Valve with Deutsch Connector (Requires Wiring Harness 72533673M)	20	843.00
	72533673M	Wiring Harness for Third Function	1	165.00

Mississippi State Contract Discount: 10%

MF 926X LOADER

MECHANICAL SELF-LEVELING

MASSEY FERGUSON®

Order Code	Catalog Number	Description	Approx. Weight (lb.)	List Price
BUCKETS - OPTIONAL				**Group 05**
	72533683M	72-inch Skid Steer Material Bucket 180U, 25 cu ft	390	1,100.00
	72533684M	84-inch Skid Steer Material Bucket 210U, 29 cu ft	437	1,200.00
	72533688M	72-inch Skid Steer Material Bucket 185S, 25 cu ft	401	1,350.00
	72533689M	84-inch Skid Steer Material Bucket 210S, 29 cu ft	505	1,550.00
	72533685M	72-inch Euro Style Material Bucket 180U, 25 cu ft	390	950.00
	72533686M	84-inch Euro Style Material Bucket 210U, 29 cu ft	437	1,050.00
	72556222M	72-inch Euro Style Material Bucket 185S, 29 cu ft	401	1,250.00
	72556223M	84-inch Euro Style Material Bucket 210S, 29 cu ft	505	1,450.00
ATTACHMENTS - OPTIONAL				**Group 06**
		Skid Steer Style		
	72533692M	48-inch Pallet Fork - 3,520 lbs (1,600 kg) Capacity	425	1,155.00
	72533695M	Round Bale Spike	144	678.00
	72533697M	Big Bale Fork with Extension	288	995.00
		Euro Style		
	72556283M	48-inch Pallet Fork - 3,520 lbs (1,600 kg) Capacity	403	1,029.00
	72556073M	Round Bale Spike	144	683.00
	72556285M	Big Bale Fork with Extension	271	966.00
		Euro Style - Requires Third Function		
	72533698M	Uni-Grip 160	530	2,495.00
	72556264M	63-inch FlexiGrip 160 with Extension (for Round Bales)	610	2,741.00
ACCESSORIES - OPTIONAL				**Group 07**
	72533693M	Log Grab (Requires 48-inch Pallet Fork)	185	1,765.00
	72533694M	Hydraulic Fork Shift Kit for 48-inch Pallet Forks (Requires Third Function)	150	1,295.00
	72556121M	Bolt-On Utility Grapple (Only Compatible with 185S and 210S Buckets)	440	2,117.00
	72556070M	Weld-On Hook Kit for Euro Tool Carrier	30	231.00

Mississippi State Contract Discount: 10%

MF 931X LOADER

NON SELF-LEVELING

MASSEY FERGUSON®

(F.O.B. Telford, TN)

FEATURES

- One Piece Main Frame with Tapered Arms and Single Cross Member
- Quick Attach Loader Frame Mount with Pin Lock
- Built-in Parking Stands
- (2) 2.8 inch Double Acting Lift Cylinders
- (2) 2.8 inch Double Acting Bucket Cylinders
- Hydraulic Lines Routed Inside Main Frame for Protection and Visibility
- Galvanized Steel Bushings with Recessed Grease Points
- Universal Skid Steer or Euro Hook Type Implement Attachments
- Grille Guard Standard
- Fits MF4609 and MF4610 2wd and 4wd Tractor Models
- Rated on MF4610 Tractor with 11.2-24 Front Tires and 16.9-30 Rear Tires
- Lift Capacity to Full Height @ 31.5 inches Forward of Pivot Pin: 3020 lbs
- Maximum Lift Height: 136 inches at Pivot
- Breakout Force: 3540 lbs
- Rated Hydraulic Pressure: 2828 PSI

Note: Tractors must be properly ballasted for loader operation. See Operator's Manual for information.

Note: Specifications may vary between tractor models, tires and hydraulic options.

Order Code	Catalog Number	Description	Approx. Weight (lb.)	List Price
		For a Complete Loader, Select One Order Code from Group 01 through Group 03		
		For Additional Hydraulics, Buckets and Accessories Order as Required From Groups 04 through 07		
BASE MACHINE				**Group 01**
XL31N1D 1200M	72533642	MF931X Base Loader - Skid Steer Style	775	4,309.00
XL31N1D 8200M	72533643	MF931X Base Loader - Euro Style	760	3,913.00
SUBFRAME MOUNTING KIT				**Group 02**
	72533658MM	Subframe Kit for MF4609 and 4610 Tractor Models	375	1,990.00
LIGHT RELOCATION KIT				
	72533750M	Light Relocation Kit for MF4600 Series Cab Tractors (Required for ALL Cabs)	15	30.00
HYDRAULICS				**Group 03**
	72533670M	Mid-Mount Hose Kit for MF4600 Tractors	15	357.00
ADDITIONAL HYDRAULIC OPTIONS				**Group 04**
	72530394M	Dealer Installed Loader Joystick and Mid Valves for use with MF4600 Series Tractors WITHOUT Factory Joystick and Mid Valves **(Order separately from Loader)**		1,313.00
	72533671M	Soft Drive Ride Control System	10	557.00
	72533672M	Third Function Valve with Deutsch Connector (Requires Wiring Harness 72533673M)	20	843.00
	72533673M	Wiring Harness for Third Function	1	165.00

Mississippi State Contract Discount: 10%

MF 931X LOADER

NON SELF-LEVELING

MASSEY FERGUSON®

Order Code	Catalog Number	Description	Approx. Weight (lb.)	List Price
BUCKETS - OPTIONAL				**Group 05**
	72533683M	72-inch Skid Steer Material Bucket 180U, 25 cu ft	390	1,100.00
	72533684M	84-inch Skid Steer Material Bucket 210U, 29 cu ft	437	1,200.00
	72533688M	72-inch Skid Steer Material Bucket 185S, 25 cu ft	401	1,350.00
	72533689M	84-inch Skid Steer Material Bucket 210S, 29 cu ft	505	1,550.00
	72533685M	72-inch Euro Style Material Bucket 180U, 25 cu ft	390	950.00
	72533686M	84-inch Euro Style Material Bucket 210U, 29 cu ft	437	1,050.00
	72556222M	72-inch Euro Style Material Bucket 185S, 29 cu ft	401	1,250.00
	72556223M	84-inch Euro Style Material Bucket 210S, 29 cu ft	505	1,450.00
ATTACHMENTS - OPTIONAL				**Group 06**
		Skid Steer Style		
	72533692M	48-inch Pallet Fork - 3,520 lbs (1,600 kg) Capacity	425	1,155.00
	72533695M	Round Bale Spike	144	678.00
	72533697M	Big Bale Fork with Extension	288	995.00
		Euro Style		
	72556283M	48-inch Pallet Fork - 3,520 lbs (1,600 kg) Capacity	403	1,029.00
	72556284M	48-inch Pallet Fork - 5,500 lbs (2,500 kg) Capacity	465	1,208.00
	72556073M	Round Bale Spike	144	683.00
	72556285M	Big Bale Fork with Extension	271	966.00
		Euro Style - Requires Third Function		
	72533698M	Uni-Grip 160	530	2,495.00
	72556264M	63-inch FlexiGrip 160 with Extension (for Round Bales)	610	2,741.00
	72556265M	79-inch FlexiGrip 200 with Extension (for Round Bales)	690	2,974.00
ACCESSORIES - OPTIONAL				**Group 07**
	72533693M	Log Grab (Requires 48-inch Pallet Fork)	185	1,765.00
	72533694M	Hydraulic Fork Shift Kit for 48-inch Pallet Forks (Requires Third Function)	150	1,295.00
	72556121M	Bolt-On Utility Grapple (Only Compatible with 185S and 210S Buckets)	440	2,117.00
	72556070M	Weld-On Hook Kit for Euro Tool Carrier	30	231.00

Mississippi State Contract Discount: 10%

MF 936X LOADER

MECHANICAL SELF-LEVELING

MASSEY FERGUSON®

(F.O.B. Telford, TN)

FEATURES

- One Piece Main Frame with Tapered Arms and Single Cross Member
- Mechanical Self-Leveling Loader
- Quick Attach Loader Frame Mount with Pin Lock
- Built-in Parking Stands
- (2) 2.6 inch Double Acting Lift Cylinders
- (2) 2.8 inch Double Acting Bucket Cylinders
- Hydraulic Lines Routed Inside Main Frame for Protection and Visibility
- Galvanized Steel Bushings with Recessed Grease Points
- Universal Skid Steer or Euro Hook Type Implement Attachments
- Grille Guard Standard)
- Fits MF4609 and MF4610 2wd and 4wd Tractor Models
- Rated on MF4610 Tractor with 11.2-24 Front Tires and 16.9-30 Rear Tires
- Lift Capacity to Full Height @ 31.5 inches Forward of Pivot Pin: 3430 lbs
- Maximum Lift Height: 136 inches at Pivot
- Breakout Force: 3660 lbs
- Rated Hydraulic Pressure: 2828 PSI

Note: Tractors must be properly ballasted for loader operation. See Operator's Manual for information.

Note: Specifications may vary between tractor models, tires and hydraulic options.

Order Code	Catalog Number	Description	Approx. Weight (lb.)	List Price
		For a Complete Loader, Select One Order Code from Group 01 through Group 03		
		For Additional Hydraulics, Buckets and Accessories Order as Required From Groups 04 through 07		
BASE MACHINE				**Group 01**
XL36P1D 1200MM	72533644	MF936X Base Loader - Skid Steer Style	920	5,233.00
XL36P1D 8200MM	72533645	MF936X Base Loader - Euro Style	900	4,837.00
SUBFRAME MOUNTING KIT				**Group 02**
	72533658MM	Subframe Kit for MF4609 and 4610 Tractor Models	375	1,990.00
LIGHT RELOCATION KIT				
	72533750M	Light Relocation Kit for MF4600 Series Cab Tractors (Required for ALL Cabs)	15	30.00
HYDRAULICS				**Group 03**
	72533670M	Mid-Mount Hose Kit for MF4600 Tractors	15	357.00
ADDITIONAL HYDRAULIC OPTIONS				**Group 04**
	72530394M	Dealer Installed Loader Joystick and Mid Valves for use with MF4600 Series Tractors WITHOUT Factory Joystick and Mid Valves **(Order separately from Loader)**		1,313.00
	72533671M	Soft Drive Ride Control System	10	557.00
	72533730M	Third Function Valve with Deutsch Connector (Requires Wiring Harness 72533673M)	20	843.00
	72533673M	Wiring Harness for Third Function	1	165.00

Mississippi State Contract Discount: 10%

MF 936X LOADER

MECHANICAL SELF-LEVELING

MASSEY FERGUSON®

Order Code	Catalog Number	Description	Approx. Weight (lb.)	List Price
BUCKETS - OPTIONAL				**Group 05**
	72533683M	72-inch Skid Steer Material Bucket 180U, 25 cu ft	390	1,100.00
	72533684M	84-inch Skid Steer Material Bucket 210U, 29 cu ft	437	1,200.00
	72533688M	72-inch Skid Steer Material Bucket 185S, 25 cu ft	401	1,350.00
	72533689M	84-inch Skid Steer Material Bucket 210S, 29 cu ft	505	1,550.00
	72533685M	72-inch Euro Style Material Bucket 180U, 25 cu ft	390	950.00
	72533686M	84-inch Euro Style Material Bucket 210U, 29 cu ft	437	1,050.00
	72556222M	72-inch Euro Style Material Bucket 185S, 29 cu ft	401	1,250.00
	72556223M	84-inch Euro Style Material Bucket 210S, 29 cu ft	505	1,450.00
ATTACHMENTS - OPTIONAL				**Group 06**
		Skid Steer Style		
	72533692M	48-inch Pallet Fork - 3,520 lbs (1,600 kg) Capacity	425	1,155.00
	72533695M	Round Bale Spike	144	678.00
	72533697M	Big Bale Fork with Extension	288	995.00
		Euro Style		
	72556283M	48-inch Pallet Fork - 3,520 lbs (1,600 kg) Capacity	403	1,029.00
	72556284M	48-inch Pallet Fork - 5,500 lbs (2,500 kg) Capacity	465	1,208.00
	72556073M	Round Bale Spike	144	683.00
	72556285M	Big Bale Fork with Extension	271	966.00
		Euro Style - Requires Third Function		
	72533698M	Uni-Grip 160	530	2,495.00
	72556264M	63-inch FlexiGrip 160 with Extension (for Round Bales)	610	2,741.00
	72556265M	79-inch FlexiGrip 200 with Extension (for Round Bales)	690	2,974.00
ACCESSORIES - OPTIONAL				**Group 07**
	72533693M	Log Grab (Requires 48-inch Pallet Fork)	185	1,765.00
	72533694M	Hydraulic Fork Shift Kit for 48-inch Pallet Forks (Requires Third Function)	150	1,295.00
	72556121M	Bolt-On Utility Grapple (Only Compatible with 185S and 210S Buckets)	440	2,117.00
	72556070M	Weld-On Hook Kit for Euro Tool Carrier	30	231.00

Mississippi State Contract Discount: 10%

MF 931 LOADER

NON SELF-LEVELING

MASSEY FERGUSON®

(F.O.B. Niagara Falls, Ontario or Telford, Tennessee)

FEATURES

- One Piece Main Frame Arms and Compression Molded Curved Cross Member
- Quick Attach Implement Mounting with Single Lever Locking System
- 4 mm High Tensile, Tapered Box Section Frame
- 70 mm Arm Profile
- 70 mm Double Acting Lift Cylinders
- 75 mm Double Acting Bucket Cylinders
- Industrial Grade Hydraulic Fittings and Hoses, Incorporated Internally Inside Loader Boom
- Central Valve, Equalized Oil Distribution Valve with Incorporated Relief Valves
- 4-Flat Face Hydraulic Tips on Boom and Bucket Circuits
- Protective Hose Cover
- Compatible with MF5450, 5609, 5610
- Lock and Go Loader/Subframe Connection System
- Pivots Are Greasable and Include Industrial Grade Pins and Bushings
- Powder Painted with Corrosion Protection
- Bucket Level Indicator
- Front Bumper Guard (With Subframe Set)
- Buckets Have Heavy Duty, Welded-On Cutting Edge, Box Beam Section for Stiffness and Torsional Rigidity and Lateral Reinforcing Bars
- 138" (3.50 m) Lift Height to Pivot Pin
- 2690 lb. (1220 kg) Lift Capacity to Full Height, 31.5" (800 mm) Forward of Pivot Pin per ASABE 301.3 @ 2828 PSI

TRACTORS MUST BE PROPERLY BALLASTED FOR LOADER OPERATION. SEE OPERATOR'S MANUAL

NOTE: SPECIFICATIONS MAY VARY BETWEEN MODELS, TIRE EQUIPMENT AND HYDRAULIC OPTIONS

IMPORTANT NOTE: Field Installed LCS Joystick is very different from the factory installed multi-function loader joystick, and will have limited capabilities comparably.

FOR MORE INFORMATION ON FIELD INSTALLED LOADER OPTIONS SEE PAGE 50

Order Code	Catalog Number	Description	Approx. Weight (lb.)	List Price
BASE MACHINE - REQUIRED				**Group 01**
MF931	72533509	MF931 Base Loader		4,435.00
		LOADER READY TRACTORS INCLUDE THE FACTORY INSTALLED LOADER SUB-FRAME MOUNTING KIT AND LOADER JOYSTICK FOR THE MF900 SERIES LOADER. ORDER THE LOADER MAIN FRAME, OPTIONS AND ATTACHMENTS TO COMPLETE LOADER.		
FIELD INSTALLED SUBFRAME MOUNTING KITS AND LCS HYDRAULICS				
		For MF5609, 5610 3 Cylinder AGCO Power Dyna-4, Classic Edition		
	72533520M	Subframe Kit Only Compatible without Front 3-Point Hitch	925	2,154.00
Choose One	72533596M	LCS Joystick Control System, 2 Function Mechanical, Open Center		1,450.00
	72533549M	Standard Hose Set (No Joystick, Uses Tractor Remotes)		515.00

MF 931 LOADER

NON SELF-LEVELING

MASSEY FERGUSON®

Order Code	Catalog Number	Description	Approx. Weight (lb.)	List Price
HYDRAULIC OPTIONS				
		Only Compatible with Factory Installed Loader Ready Subframe and Hydraulic Service Sets		
	72556254M	Third Function Electric Diverter Valve . . . . . (Does not require Live 3rd Hose Kit)		823.00
	72533343M	4 Coupler Quick Release Single Lever . . . . . for Factory Installed Two Function Hydraulic Valve Sets		638.00
ADDITIONAL HYDRAULIC OPTIONS				
		Compatible with Factory and Field Installed Subframe and Hydraulic Service Sets		
	72533566M	Soft Drive Ride Control System		729.00
	72533570M	Soft Drive Electric Shutoff Kit. . . . . Compatible with Soft Drive Control System above		420.00
	72533571M	Hydraulic Implement Locking Set . . . . . Requires 3rd Function to Operate		597.00
	72533576M	Selecto Fix Loader Part . . . . . (Flat Face Quick Release System for Hydraulic Implements) Requires 3rd Function		551.00
	72533577M	Selecto Fix Implement Part. . . . . (Flat Face Quick Release System for Hydraulic Implements) One Required with each Hydraulic Implement (Required with Selecto Fix Loader Part)		313.00
	72533573M	MC4 Multicoupler, 4 Coupler Quick Release . . . . . for Field Installed LCS Hydraulic Service Sets		618.00

Mississippi State Contract Discount: 10%

MF 931 LOADER

NON SELF-LEVELING

MASSEY FERGUSON®

Order Code	Catalog Number	Description	Approx. Weight (lb.)	List Price
BUCKETS - OPTIONAL				**Group 05**
	72556037M	73" Material Bucket 185H, 25 cu ft (0.92 cu yd)	452	1,221.00
	72556038M	83" Material Bucket 210H, 29 cu ft (1.07 cu yds)	556	1,372.00
	72556041M	73" Heavy Duty Material Bucket 185HD, 25 cu ft (0.92 cu yd)	518	1,444.00
	72556042M	83" Heavy Duty Material Bucket 210HD, 29 cu ft (1.07 cu yds)	628	1,639.00
	72556046M	63" Construction Tooth Bucket 160HT, 23 cu ft (0.85 cu yd)	379	1,374.00
	72556047M	73" Construction Tooth Bucket 185HT, 25 cu ft (0.92 cu yd)	465	1,517.00
	72556049M	79" Light Material High Volume Bucket 200HV, 40 cu ft (1.48 cu yds)	602	1,545.00
	72556050M	87" Light Material High Volume Bucket 220HV, 44 cu ft (1.63 cu yds)	648	1,930.00
	72556261M	83" Heavy Duty High Volume Bucket 210HDV, 53 cu ft (1.96 cu yds)	917	2,218.00
ATTACHMENTS - OPTIONAL				
	72556073M	Round Bale Spike	132	683.00
	72556285M	Big Bale Fork with Extension	273	966.00
	72556283M	48” Pallet Fork - 3,520 lbs (1,600 kg) Capacity	353	1,029.00
	72556284M	48” Pallet Fork - 5,500 lbs (2,500 kg) Capacity	375	1,208.00
	72556114M	59" Wide (150 cm) Stone Fork	475	2,244.00
	72556115M	79" Wide (200 cm) Stone Fork	589	2,838.00
	72533693M	Log Grab (Requires 48" Pallet Fork)	187	1,847.00
	72556264M	63" FlexiGrip 160 (for Round Bales)	607	2,741.00
	72556058M	92" QuadroGrip 200 (for Round or Square Bales)	916	4,542.00
ACCESSORIES - OPTIONAL				
	72556070M	Weld-On Hook Set - (to Adapt Attachments)	30	231.00
	72556069M	Counterweight - 3-Point Hitch (Empty)	276	1,018.00
	72533580	French Language Package (Manual and Decal Kit)		No Charge

MASSEY FERGUSON®

RESERVED

MF 941 / MF 946 LOADERS

NON SELF-LEVELING / MECHANICAL SELF-LEVELING

MASSEY FERGUSON®

(F.O.B. Niagara Falls, Ontario or Telford, Tennessee)

FEATURES

- One Piece Main Frame Arms and Compression Molded Curved Cross Member
- Quick Attach Implement Mounting with Single Lever Locking System
- 5 mm High Tensile, Tapered Box Section Frame
- 70 mm Arm Profile
- 80 mm Double Acting Lift Cylinders **(MF941)**
- 75 mm Double Acting Lift Cylinders **(MF946)**
- 80 mm Double Acting Bucket Cylinders **(MF 941)**
- 80 mm Double Acting, Equal Displacement Bucket Cylinders **(MF 946)**
- Industrial Grade Hydraulic Fittings and Hoses, Incorporated Internally Inside Loader Boom
- Central Valve, Equalized Oil Distribution Valve with Incorporated Relief Valves
- 4-Flat Face Hydraulic Tips on Boom and Bucket Circuits
- Protective Hose Cover
- Compatible with MF5445, 5450, 5455, 5460, 5609, 5610, 5611, 5612, 5613
- Lock and Go Loader / Subframe Connection System
- Pivots Are Greasable and Include Industrial Grade Pins and Bushings
- Powder Painted with Corrosion Protection
- Bucket Level Indicator
- Front Bumper Guard (With Subframe Set)
- Buckets Have Heavy Duty, Welded-On Cutting Edge, Box Beam Section for Stiffness and Torsional Rigidity and Lateral Reinforcing Bars
- 148" (3.75 m) Lift Height to Pivot Pin
- **MF 941**: 3307 lb. (1500 kg) Lift Capacity to Full Height, 31.5",(800 mm) Forward of Pivot Pin per ASABE 301.3 @ 2828 PSI
- **MF 946**: 3593 lb. (1630 kg) Lift Capacity to Full Height, 31.5", (800 mm) Forward of Pivot Pin per ASABE 301.3 @ 2828 PSI

TRACTORS MUST BE PROPERLY BALLASTED FOR LOADER OPERATION. SEE OPERATOR'S MANUAL

NOTE: SPECIFICATIONS MAY VARY BETWEEN MODELS, TIRE EQUIPMENT AND HYDRAULIC OPTIONS

IMPORTANT NOTE: Field Installed LCS Joystick is very different from the factory installed multi-function loader joystick, and will have limited capabilities comparably.

FOR MORE INFORMATION ON FIELD INSTALLED LOADER OPTIONS SEE PAGE 50

Order Code	Catalog Number	Description	Approx. Weight (lb.)	List Price
BASE MACHINE - REQUIRED				**Group 01**
MF941	72533501	MF941 Base Loader, Non Self-Leveling	1135	5,667.00
MF946	72533504	MF946 Base Loader, Mechanical Self-Leveling	1290	7,798.00
		LOADER READY TRACTORS INCLUDE THE FACTORY INSTALLED LOADER SUB-FRAME MOUNTING KIT AND LOADER JOYSTICK FOR THE MF900 SERIES LOADER. ORDER THE LOADER MAIN FRAME, OPTIONS AND ATTACHMENTS TO COMPLETE LOADER.		
FIELD INSTALLED SUBFRAME MOUNTING KITS AND LCS HYDRAULICS				
		For MF5609, 5610 3 Cylinder, AGCO Power Dyna-4, Classic Edition		
	72533520M	Subframe Kit Only Compatible without Front 3-Point Hitch	925	2,154.00
Choose One	72533596M	LCS Joystick Control System, 2 Function Mechanical, Open Center		1,450.00
	72533549M	Standard Hose Set (No Joystick, Uses Tractor Remotes)		515.00
		For MF5611, 5612, 5613 4 Cylinder, AGCO Power Dyna-4, Classic Editions		
	72533720M	Subframe Kit Only Compatible without Front 3-Point Hitch		3,242.00
Choose One	72533721M	LCS Joystick Control System, 2 Function Mechanical, Open Center		1,450.00
	72533723M	LCS Joystick Control System, 2 Function Mechanical, Closed Center Load Sensing		1,450.00
	72533549M	Standard Hose Set (No Joystick, Uses Tractor Remotes)		515.00

Order Code	Catalog Number	Description	Approx. Weight (lb.)	List Price
FIELD INSTALLED SUBFRAME MOUNTING KITS AND LCS HYDRAULICS - CONTINUED				
	For MF5611, 5612, 5613 4 Cylinder, AGCO Power Dyna-4, Deluxe Editions			
	72533720M	Subframe Kit . . . . . Only Compatible without Front 3-Point Hitch		3,242.00
Choose One	72533725M	LCS Joystick Control System, ... 2 Function Electric, Open Center		3,349.00
	72533727M	LCS Joystick Control System, ... 2 Function Electric, Closed Center Load Sensing		3,349.00
	72533549M	Standard Hose Set (No Joystick, Uses Tractor Remotes) . . .		515.00
	For MF5450			
	72533520M	Subframe Kit . . . . . Only Compatible without Front 3-Point Hitch		2,154.00
Choose One	72533524M	LCS Joystick Control System, ... 2 Function Mechanical, Open Center		1,450.00
	72533549M	Standard Hose Set (No Joystick, Uses Tractor Remotes) . . .		515.00
	For MF5445, 5455, 5460 4 Cylinder Perkins Tier III Dyna-4			
	7627201M	Subframe Kit		2,154.00
Choose One	72533527M	LCS Joystick Control System, ... 2 Function Mechanical, Open Center		1,450.00
	72533528M	LCS Joystick Control System, ... 3 Function Mechanical, Open Center, Includes Live 3rd Function		2,410.00
	72533531M	LCS Joystick Control System, ... 2 Function Mechanical, Closed Center Load Sensing		1,450.00
	72533532M	LCS Joystick Control System, ... 3 Function Mechanical, Closed Center Load Sensing, Includes Live 3rd Function		2,410.00
	72533549M	Standard Hose Set (No Joystick, Uses Tractor Remotes) . . .		515.00

HYDRAULIC OPTIONS

	Only Compatible with Factory Installed Loader Ready Subframe and Hydraulic Service Sets			
	72556254M	Third Function Electric Diverter Valve . . . . . (Does not require Live 3rd Hose Kit)		823.00
	72533343M	4 Coupler Quick Release Single Lever . . . . . for Factory Installed Two Function Hydraulic Valve Sets		638.00
	72533351M	Field Installed Live 3rd Set . . . . . Which can be Added to Factory Installed Two Function Load Sensing Cable Operated Hydraulic Sets (For use with MF5400 Series)		1,048.00
	72533344M	6 Coupler Quick Release Single Lever . . . . . Compatible when Adding a Field Installed Live 3rd to Factory Installed Two Function Cable Operated Valve		911.00

MF 941 / MF 946 LOADERS

NON SELF-LEVELING / MECHANICAL SELF-LEVELING

MASSEY FERGUSON®

Order Code	Catalog Number	Description	Approx. Weight (lb.)	List Price
HYDRAULIC OPTIONS - CONTINUED				
		Compatible with Field Installed Subframe and LCS Hydraulic Service Sets		
	72556254M	Third Function Electric Diverter Valve . . . . . (Does not require Live 3rd Hose Kit)		823.00
	72533573M	MC4 Multicoupler, 4 Coupler Quick Release . . . . . for Field Installed LCS Hydraulic Service Sets		618.00
	72533575M	MC2 Multicoupler, 2 Coupler Quick Release . . . . . for LCS "LIVE" 3rd Hydraulic Service Sets When ordering also order MC4 Multicoupler		526.00
ADDITIONAL HYDRAULIC OPTIONS				
		Compatible with Factory and Field Installed Subframe and Hydraulic Service Sets		
	72533566M	Soft Drive Ride Control System		729.00
	72533570M	Soft Drive Electric Shutoff Kit. . . . . Compatible with Soft Drive Control System above		420.00
	72533556M	Live 3rd Function Hose Kit . . . . . for Loader Boom with FLAT FACE Couplers (Compatible with 72533351, 72533528, 72533532)		320.00
	72533571M	Hydraulic Implement Locking Set . . . . . Requires 3rd Function to Operate		597.00
	72533576M	Selecto Fix Loader Part . . . . . (Flat Face Quick Release System for Hydraulic Implements) Requires 3rd Function		551.00
	72533577M	Selecto Fix Implement Part. . . . . (Flat Face Quick Release System for Hydraulic Implements) One Required with each Hydraulic Implement (Required with Selecto Fix Loader Part)		313.00
BUCKETS - OPTIONAL				**Group 05**
	72556037M	73" Material Bucket 185H, 25 cu ft (0.92 cu yd)	452	1,221.00
	72556038M	83" Material Bucket 210H, 29 cu ft (1.07 cu yds).	556	1,372.00
	72556039M	95" Material Bucket 240H, 34 cu ft (1.26 cu yds).	648	1,851.00
	72556041M	73" Heavy Duty Material Bucket 185HD, 25 cu ft (0.92 cu yd) .	518	1,444.00
	72556042M	83" Heavy Duty Material Bucket 210HD, 29 cu ft (1.07 cu yds)	628	1,639.00
	72556043M	95" Heavy Duty Material Bucket 240HD, 34 cu ft (1.26 cu yds)	750	2,269.00
	72556046M	63" Construction Tooth Bucket 160HT, 23 cu ft (0.85 cu yd). .	379	1,374.00
	72556047M	73" Construction Tooth Bucket 185HT, 25 cu ft (0.92 cu yd). .	465	1,517.00
	72556048M	83" Construction Tooth Bucket 210HT, 29 cu ft (1.07 cu yds) .	571	1,743.00
	72556049M	79" Light Material High Volume Bucket 200HV, ... 40 cu ft (1.48 cu yds)	602	1,545.00
	72556050M	87" Light Material High Volume Bucket 220HV, ... 44 cu ft (1.63 cu yds)	648	1,930.00
	72556261M	83" Heavy Duty High Volume Bucket 210HDV, ... 53 cu ft (1.96 cu yds)	917	2,218.00

MF 941 / MF 946 LOADERS

NON SELF-LEVELING / MECHANICAL SELF-LEVELING

MASSEY FERGUSON®

Order Code	Catalog Number	Description	Approx. Weight (lb.)	List Price
ATTACHMENTS - OPTIONAL				
	72556073M	Round Bale Spike	132	683.00
	72556285M	Big Bale Fork with Extension	273	966.00
	72556108M	83" Maxi-Grapple -210T (Tine Bucket)	1367	5,578.00
	72556111M	83" Maxi-Grapple -210 (Standard Bucket)	1334	5,422.00
	72556283M	48” Pallet Fork - 3,520 lbs (1,600 kg) Capacity	353	1,029.00
	72556284M	48” Pallet Fork - 5,500 lbs (2,500 kg) Capacity	375	1,208.00
	72556114M	59" Wide (150 cm) Stone Fork	475	2,244.00
	72556115M	79" Wide (200 cm) Stone Fork	589	2,838.00
	72533693M	Log Grab (Requires 48" Pallet Fork)	187	1,847.00
	72556264M	63" FlexiGrip 160 (for Round Bales)	607	2,741.00
	72556265M	79" FlexiGrip 200 (for Round Bales)	686	2,974.00
	72556058M	92" QuadroGrip 200 (for Round or Square Bales)	916	4,542.00
ACCESSORIES - OPTIONAL				
	72556118M	Back Screen for Maxi Grapple	45	328.00
	72556070M	Weld-On Hook Set - (to Adapt Attachments)	30	231.00
	72556069M	Counterweight - 3-Point Hitch (Empty)	276	1,018.00
	72533580	French Language Package (Manual and Decal Kit)		No Charge

MF 951 / MF 956 LOADERS

NON SELF-LEVELING / MECHANICAL SELF-LEVELING

MASSEY FERGUSON®

Order Code	Catalog Number	Description	Approx. Weight (lb.)	List Price
FIELD INSTALLED SUBFRAME MOUNTING KITS AND LCS HYDRAULICS - CONTINUED				
	For MF6614, 6615, 6616 4 Cyl SISU, Tier IVi, Deluxe or Premium Editions			
	72533766M	Subframe Kit . . . . . For use with Dyna-6 Transmission (Tractors without Front Hitch)		3,242.00
	72533606M	Subframe Kit . . . . . For use with Dyna-VT (Tractors without Front Hitch)		3,242.00
Choose One	◆◆72533605M	LCS Joystick Control System, ... 2 Function Electric, Closed Center Load Sensing		3,349.00
	◆◆72533611M	LCS Joystick Control System, ... 3 Function Electric, Closed Center Load Sensing, Includes Live 3rd Function		4,307.00
	72533549M	Standard Hose Set (No Joystick, Uses Tractor Remotes) . . .		515.00
	For MF5470, 5480 Tier III Dyna-4			
	72533355	Subframe Kit . . . . . for MF5470, 5480 4 Cylinder SISU, Dyna-4	925	2,154.00
Choose One	72533527M	LCS Joystick Control System, ... 2 Function Mechanical, Open Center		1,450.00
	72533528M	LCS Joystick Control System, ... 3 Function Mechanical, Open Center, Includes Live 3rd Function		2,410.00
	72533531M	LCS Joystick Control System, ... 2 Function Mechanical, Closed Center Load Sensing		1,450.00
	72533532M	LCS Joystick Control System, ... 3 Function Mechanical, Closed Center Load Sensing, Includes Live 3rd Function		2,410.00
	72533549M	Standard Hose Set (No Joystick, Uses Tractor Remotes) . . .		515.00

◆◆ Requires 4313756M91 and 3796801M1 from AGCO Parts to complete hydraulic connection only for Dyna-6 Transmission with Closed Center Load Sensing

MF 951 / MF 956 LOADERS

NON SELF-LEVELING / MECHANICAL SELF-LEVELING

MASSEY FERGUSON®

Order Code	Catalog Number	Description	Approx. Weight (lb.)	List Price
HYDRAULIC OPTIONS				
		Only Compatible with Factory Installed Loader Ready Subframe and Hydraulic Service Sets		
	72556254M	Third Function Electric Diverter Valve . . . . . (Does not require Live 3rd Hose Kit)		823.00
	72533343M	4 Coupler Quick Release Single Lever . . . . . for Factory Installed Two Function Hydraulic Valve Sets		638.00
	72533351M	Field Installed Live 3rd Set . . . . . Which can be Added to Factory Installed Two Function Load Sensing Cable Operated Hydraulic Sets (For use with MF5400 Series)		1,048.00
	72533359M	Field Installed Live 3rd Set . . . . . Which can be Added to Factory Installed Two Function Load Sensing Cable Operated Hydraulic Sets (For use with Classic Versions MF6600 and MF7600 Series)		1,048.00
	72533344M	6 Coupler Quick Release Single Lever . . . . . Compatible when Adding a Field Installed Live 3rd to Factory Installed Two Function Cable Operated Valve		911.00
		Compatible with Field Installed Subframe and Hydraulic LCS Service Sets		
	72556254M	Third Function Electric Diverter Valve . . . . . (Does not require Live 3rd Hose Kit)		823.00
	72533573M	MC4 Multicoupler, 4 Coupler Quick Release . . . . . for Field Installed LCS Hydraulic Service Sets		618.00
	72533575M	MC2 Multicoupler, 2 Coupler Quick Release . . . . . for LCS "LIVE" 3rd Hydraulic Service Sets When ordering also order MC4 Multicoupler		526.00
ADDITIONAL HYDRAULIC OPTIONS				
		Compatible with Factory and Field Installed Subframe and Hydraulic Service Sets		
	72533567M	Soft Drive Ride Control System		907.00
	72533570M	Soft Drive Electric Shutoff Kit. . . . . Compatible with Soft Drive Control System above		420.00
	72533558M	Live 3rd Function Hose Kit . . . . . for Loader Boom with FLAT FACE Couplers (Compatible with 72533351, 72533359, 72533528, 72533532)		320.00
	72533571M	Hydraulic Implement Locking Set . . . . . Requires 3rd Function to Operate		597.00
	72533576M	Selecto Fix Loader Part . . . . . (Flat Face Quick Release System for Hydraulic Implements) Requires 3rd Function		551.00
	72533577M	Selecto Fix Implement Part. . . . . (Flat Face Quick Release System for Hydraulic Implements) One Required with each Hydraulic Implement (Required with Selecto Fix Loader Part)		313.00

Mississippi State Contract Discount: 10%

MF 951 / MF 956 LOADERS

NON SELF-LEVELING / MECHANICAL SELF-LEVELING

MASSEY FERGUSON®

Order Code	Catalog Number	Description	Approx. Weight (lb.)	List Price
BUCKETS - OPTIONAL				
	72556037M	73" Material Bucket 185H, 25 cu ft (0.92 cu yd)	452	1,221.00
	72556038M	83" Material Bucket 210H, 29 cu ft (1.07 cu yds)	556	1,372.00
	72556039M	95" Material Bucket 240H, 34 cu ft (1.26 cu yds)	648	1,851.00
	72556041M	73" Heavy Duty Material Bucket 185HD, 25 cu ft (0.92 cu yd)	518	1,444.00
	72556042M	83" Heavy Duty Material Bucket 210HD, 29 cu ft (1.07 cu yds)	628	1,639.00
	72556043M	95" Heavy Duty Material Bucket 240HD, 34 cu ft (1.26 cu yds)	750	2,269.00
	72556046M	63" Construction Tooth Bucket 160HT, 23 cu ft (0.85 cu yd)	379	1,374.00
	72556047M	73" Construction Tooth Bucket 185HT, 25 cu ft (0.92 cu yd)	465	1,517.00
	72556048M	83" Construction Tooth Bucket 210HT, 29 cu ft (1.07 cu yds)	571	1,743.00
	72556049M	79" Light Material High Volume Bucket 200HV, 40 cu ft (1.48 cu yds)	602	1,545.00
	72556050M	87" Light Material High Volume Bucket 220HV, 44 cu ft (1.63 cu yds)	648	1,930.00
	72556261M	83" Heavy Duty High Volume Bucket 210HDV, 53 cu ft (1.96 cu yds)	917	2,218.00
	72556262M	95" Heavy Duty High Volume Bucket 240HDV, 60 cu ft (2.22 cu yds)	955	2,602.00
ATTACHMENTS - OPTIONAL				
	72556073M	Round Bale Spike	132	683.00
	72556285M	Big Bale Fork with Extension	273	966.00
	72556108M	83" Maxi-Grapple -210T (Tine Bucket)	1367	5,578.00
	72556109M	95" Maxi-Grapple -240T (Tine Bucket)	1444	5,925.00
	72556111M	83" Maxi-Grapple -210 (Standard Bucket)	1334	5,422.00
	72556112M	95" Maxi-Grapple -240 (Standard Bucket)	1411	5,771.00
	72556283M	48” Pallet Fork - 3,520 lbs (1,600 kg) Capacity	353	1,029.00
	72556284M	48” Pallet Fork - 5,500 lbs (2,500 kg) Capacity	375	1,208.00
	72556114M	59" Wide (150 cm) Stone Fork	475	2,244.00
	72556115M	79" Wide (200 cm) Stone Fork	589	2,838.00
	72533693M	Log Grab (Requires 48" Pallet Fork)	187	1,847.00
	72556264M	63" FlexiGrip 160 (for Round Bales)	607	2,741.00
	72556265M	79" FlexiGrip 200 (for Round Bales)	686	2,974.00
	72556058M	92" QuadroGrip 200 (for Round or Square Bales)	916	4,542.00
ACCESSORIES - OPTIONAL				
	72556118M	Back Screen for Maxi Grapple	45	328.00
	72556070M	Weld-On Hook Set - (to Adapt Attachments)	30	231.00
	72556069M	Counterweight - 3-Point Hitch (Empty)	276	1,018.00
	72533580	French Language Package (Manual and Decal Kit)		No Charge

Mississippi State Contract Discount: 10%

MF 961 / MF 968 LOADERS

NON SELF-LEVELING / MECHANICAL SELF-LEVELING

MASSEY FERGUSON®

(F.O.B. Niagara Falls, Ontario or Telford, Tennessee)

FEATURES

- One Piece Main Frame Arms and Compression Molded Curved Cross Member
- Quick Attach Implement Mounting with Single Lever Locking System
- 6 mm High Tensile, Tapered Box Section Frame
- 70 mm Arm Profile
- 90 mm Double Acting Lift Cylinders
- 85 mm Double Acting, Bucket Cylinders **(MF 961)**
- 95 mm Double Acting, Equal Displacement Bucket Cylinders **(MF 968)**
- Industrial Grade Hydraulic Fittings and Hoses, Incorporated Internally Inside Loader Boom
- Central Valve, Equalized Oil Distribution Valve with Incorporated Relief Valves
- 4-Flat Face Hydraulic Tips on Boom and Bucket Circuits
- Protective Hose Cover
- Compatible with MF7614, 7615, 7616, 7618
- Lock and Go Loader / Subframe Connection System
- Pivots are Greaseable and Include Industrial Grade Pins and Bushings
- Powder Painted with Corrosion Protection
- Bucket Level Indicator
- Front Bumper Guard (with Subframe Set)
- Buckets Have Heavy Duty, Welded-On Cutting Edge, Box Beam Section for Stiffness and Torsional Rigidity and Lateral Reinforcing Bars
- 167" (4.25 m) Lift Height to Pivot Pin
- **MF 961**: 4343 lb. (1970 kg) Lift Capacity to Full Height, 31.5" (800 mm) Forward of Pivot Pin per ASABE 301.3 @ 2828 PSI
- **MF 968**: 5401 lb. (2450 kg) Lift Capacity to Full Height, 31.5" (800 mm) Forward of Pivot Pin per ASABE 301.3 @ 2828 PSI

TRACTORS MUST BE PROPERLY BALLASTED FOR LOADER OPERATION. SEE OPERATOR'S MANUAL

NOTE: SPECIFICATIONS MAY VARY BETWEEN MODELS, TIRE EQUIPMENT AND HYDRAULIC OPTIONS

IMPORTANT NOTE: Field Installed LCS Joystick is very different from the factory installed multi-function loader joystick, and will have limited capabilities comparably.

NOTE: Front Fenders Positioned at Narrow Tread Settings may Interfere with the Loader Lift Cylinders

FOR MORE INFORMATION ON FIELD INSTALLED LOADER OPTIONS SEE PAGE 50

Order Code	Catalog Number	Description	Approx. Weight (lb.)	List Price
BASE MACHINE - REQUIRED				**Group 01**
MF961	72533503	MF961 Base Loader, Non Self-Leveling	1384	8,006.00
MF968	72533506	MF968 Base Loader, Mechanical Self-Leveling	1590	9,948.00
		LOADER READY TRACTORS INCLUDE THE FACTORY INSTALLED LOADER SUB-FRAME MOUNTING KIT AND LOADER JOYSTICK FOR THE MF900 SERIES LOADER. ORDER THE LOADER MAIN FRAME, OPTIONS AND ATTACHMENTS TO COMPLETE LOADER.		
FIELD INSTALLED SUBFRAME MOUNTING KITS AND LCS HYDRAULICS				
		For MF7614, 7615 6 Cylinder, AGCO Power, Tier IVi, Dyna-4, Classic Edition		
	72533594M	Subframe Kit for MF7614, 7615 6 Cylinder AGCO Power Tier IVi Dyna-4 Classic Edition		2,520.00
Choose One	72533585M	LCS Joystick Control System, 2 Function Mechanical, Open Center		1,450.00
	72533586M	LCS Joystick Control System, 3 Function Mechanical, Open Center, Includes Live 3rd Function		2,410.00
	◆72533589M	LCS Joystick Control System, 2 Function Mechanical, Closed Center Load Sensing		1,450.00
	◆72533590M	LCS Joystick Control System, 3 Function Mechanical, Closed Center Load Sensing, Includes Live 3rd Function		2,410.00

◆ **Requires 4313756M91 and 3796801M1 from AGCO Parts to complete hydraulic connection**

MF 961 / MF 968 LOADERS

NON SELF-LEVELING / MECHANICAL SELF-LEVELING

MASSEY FERGUSON®

Order Code	Catalog Number	Description	Approx. Weight (lb.)	List Price
FIELD INSTALLED SUBFRAME MOUNTING KITS AND LCS HYDRAULICS - CONTINUED				
	For MF7615, 7616, 7618 6 Cylinder, AGCO Power, Tier IVi, Dyna-6, Classic Edition			
	72533594M	Subframe Kit for MF7615, 7616, 7618 . . . . . 6 Cylinder AGCO Power Tier IVi Dyna-6 Classic Edition		2,520.00
Choose One	72533585M	LCS Joystick Control System, ... 2 Function Mechanical, Open Center		1,450.00
	72533586M	LCS Joystick Control System, ... 3 Function Mechanical, Open Center, Includes Live 3rd Function		2,410.00
	◆72533589M	LCS Joystick Control System, ... 2 Function Mechanical, Closed Center Load Sensing		1,450.00
	◆72533590M	LCS Joystick Control System, ... 3 Function Mechanical, Closed Center Load Sensing, Includes Live 3rd Function		2,410.00
	For MF7615, 7616, 7618 6 Cylinder, AGCO Power, Tier IVi, Dyna-6, Deluxe or Premium Editions			
	72533594M	Subframe Kit for MF7615, 7616, 7618 . . . . . 6 Cylinder AGCO Power Tier IVi Dyna-6 Deluxe or Premium Editions		2,520.00
Choose One	◆72533618M	LCS Joystick Control System, ... 2 Function Electric, Closed Center Load Sensing		3,349.00
	◆72533583M	LCS Joystick Control System, ... 3 Function Electric, Closed Center Load Sensing, Includes Live 3rd Function		4,307.00
	For MF7615, 7616, 7618 6 Cylinder, AGCO Power, Tier IVi, Dyna-VT, Deluxe or Premium Editions			
	72533595M	Subframe Kit for MF7615,7616,7618. . . . . 6 Cylinder AGCO Power Tier IVi Dyna-VT Deluxe or Premium Editions		2,520.00
Choose One	72533618M	LCS Joystick Control System, ... 2 Function Electric, Closed Center Load Sensing		3,349.00
	72533583M	LCS Joystick Control System, ... 3 Function Electric, Closed Center Load Sensing, Includes Live 3rd Function		4,307.00

◆ **Requires 4313756M91 and 3796801M1 from AGCO Parts to complete hydraulic connection**

MF 961 / MF 968 LOADERS

NON SELF-LEVELING / MECHANICAL SELF-LEVELING

MASSEY FERGUSON®

Order Code	Catalog Number	Description	Approx. Weight (lb.)	List Price
HYDRAULIC OPTIONS				
		Only Compatible with Factory Installed Loader Ready Subframe and Hydraulic Service Sets		
	72556254M	Third Function Electric Diverter Valve . . . . . (Does not require Live 3rd Hose Kit)		823.00
	72533343M	4 Coupler Quick Release Single Lever . . . . . for Factory Installed Two Function Hydraulic Valve Sets		638.00
	72533351M	Field Installed Live 3rd Set . . . . . Which can be Added to Factory Installed Two Function Load Sensing Cable Operated Hydraulic Sets (For use with MF5400 Series)		1,048.00
	72533359M	Field Installed Live 3rd Set . . . . . Which can be Added to Factory Installed Two Function Load Sensing Cable Operated Hydraulic Sets (For use with Classic Versions MF6600 and MF7600 Series)		1,048.00
	72533344M	6 Coupler Quick Release Single Lever . . . . . Compatible when Adding a Field Installed Live 3rd to Factory Installed Two Function Cable Operated Valve		911.00
		Compatible with Field Installed Subframe and Hydraulic LCS Service Sets		
	72556254M	Third Function Electric Diverter Valve . . . . . (Does not require Live 3rd Hose Kit)		823.00
	72533573M	MC4 Multicoupler, 4 Coupler Quick Release . . . . . for Field Installed LCS Hydraulic Service Sets		618.00
	72533575M	MC2 Multicoupler, 2 Coupler Quick Release . . . . . for LCS "LIVE" 3rd Hydraulic Service Sets When ordering also order MC4 Multicoupler		526.00
ADDITIONAL HYDRAULIC OPTIONS				
		Compatible with Factory and Field Installed Subframe and Hydraulic Service Sets		
	72533567M	Soft Drive Ride Control System		907.00
	72533570M	Soft Drive Electric Shutoff Kit. . . . . Compatible with Soft Drive Control System above		420.00
	72533560M	Live 3rd Function Hose Kit . . . . . for Loader Boom with FLAT FACE Couplers (Compatible with 72533351, 72533359, 72533528, 72533532)		320.00
	72533571M	Hydraulic Implement Locking Set . . . . . Requires 3rd Function to Operate		597.00
	72533576M	Selecto Fix Loader Part . . . . . (Flat Face Quick Release System for Hydraulic Implements) Requires 3rd Function		551.00
	72533577M	Selecto Fix Implement Part. . . . . (Flat Face Quick Release System for Hydraulic Implements) One Required with each Hydraulic Implement (Required with Selecto Fix Loader Part)		313.00

Mississippi State Contract Discount: 10%

MF 961 / MF 968 LOADERS

NON SELF-LEVELING / MECHANICAL SELF-LEVELING

MASSEY FERGUSON®

Order Code	Catalog Number	Description	Approx. Weight (lb.)	List Price
BUCKETS - OPTIONAL				
	72556038M	83" Material Bucket 210H, 29 cu ft (1.07 cu yds)	556	1,372.00
	72556039M	95" Material Bucket 240H, 34 cu ft (1.26 cu yds)	648	1,851.00
	72556041M	73" Heavy Duty Material Bucket 185HD, 25 cu ft (0.92 cu yd)	518	1,444.00
	72556042M	83" Heavy Duty Material Bucket 210HD, 29 cu ft (1.07 cu yds)	628	1,639.00
	72556043M	95" Heavy Duty Material Bucket 240HD, 34 cu ft (1.26 cu yds)	750	2,269.00
	72556044M	102" Heavy Duty Material Bucket 260HD, 36 cu ft (1.33 cu yds)	805	2,747.00
	72556047M	73" Construction Tooth Bucket 185HT, 25 cu ft (0.92 cu yd)	465	1,517.00
	72556048M	83" Construction Tooth Bucket 210HT, 29 cu ft (1.07 cu yds)	571	1,743.00
	72556261M	83" Heavy Duty High Volume Bucket 210HDV, 53 cu ft (1.96 cu yds)	917	2,218.00
	72556262M	95" Heavy Duty High Volume Bucket 240HDV, 60 cu ft (2.22 cu yds)	955	2,602.00
	72556263M	102" Heavy Duty High Volume Bucket 260HDV, 65 cu ft (2.4 cu yds)	1036	3,230.00
ATTACHMENTS - OPTIONAL				
	72556073M	Round Bale Spike	132	683.00
	72556285M	Big Bale Fork with Extension	273	966.00
	72556108M	83" Maxi-Grapple -210T (Tine Bucket)	1367	5,578.00
	72556109M	95" Maxi-Grapple -240T (Tine Bucket)	1444	5,925.00
	72556110M	102" Maxi-Grapple -260T (Tine Bucket)	1610	6,393.00
	72556111M	83" Maxi-Grapple -210 (Standard Bucket)	1334	5,422.00
	72556112M	95" Maxi-Grapple -240 (Standard Bucket)	1411	5,771.00
	72556113M	102" Maxi-Grapple -260 (Standard Bucket)	1567	6,113.00
	72556283M	48” Pallet Fork - 3,520 lbs (1,600 kg) Capacity	353	1,029.00
	72556284M	48” Pallet Fork - 5,500 lbs (2,500 kg) Capacity	375	1,208.00
	72556115M	79" Wide (200 cm) Stone Fork	589	2,838.00
	72533693M	Log Grab (Requires 48" Pallet Fork)	187	1,847.00
	72556264M	63" FlexiGrip 160 (for Round Bales)	607	2,741.00
	72556265M	79" FlexiGrip 200 (for Round Bales)	686	2,974.00
	72556058M	92" QuadroGrip 200 (for Round or Square Bales)	916	4,542.00
ACCESSORIES - OPTIONAL				
	72556118M	Back Screen for Maxi Grapple	45	328.00
	72556070M	Weld-On Hook Set - (to Adapt Attachments)	30	231.00
	72556069M	Counterweight - 3-Point Hitch (Empty)	276	1,018.00
	72533580	French Language Package (Manual and Decal Kit)		No Charge

MASSEY FERGUSON®

MF 978 LOADER

MECHANICAL SELF-LEVELING

(F.O.B. Niagara Falls, Ontario or Telford, Tennessee)

FEATURES

- One Piece Main Frame Arms and Compression Molded Curved Cross Member
- Quick Attach Implement Mounting with Single Lever Locking System
- 6 mm High Tensile, Tapered Box Section Frame
- 70 mm Arm Profile
- 95 mm Double Acting Lift Cylinders
- 100 mm Double Acting, Equal Displacement Bucket Cylinders
- Industrial Grade Hydraulic Fittings and Hoses, Incorporated Internally Inside Loader Boom
- Central Valve, Equalized Oil Distribution Valve with Incorporated Relief Valves
- 4-Flat Face Hydraulic Tips on Boom and Bucket Circuits
- Protective Hose Cover
- Compatible with MF7619, 7620, 7622
- Lock and Go Loader / Subframe Connection System
- Pivots are Greaseable and Include Industrial Grade Pins and Bushings
- Powder Painted with Corrosion Protection
- Bucket Level Indicator
- Front Bumper Guard (with Subframe Set)
- Buckets Have Heavy Duty, Welded-On Cutting Edge, Box Beam Section for Stiffness and Torsional Rigidity and Lateral Reinforcing Bars
- 177" (4.50 m) Lift Height to Pivot Pin
- 5357 lb. (2430 kg) Lift Capacity to Full Height, 31.5" (800 mm) Forward of Pivot Pin per ASABE 301.3 @ 2828 PSI

TRACTORS MUST BE PROPERLY BALLASTED FOR LOADER OPERATION. SEE OPERATOR'S MANUAL

NOTE: SPECIFICATIONS MAY VARY BETWEEN MODELS, TIRE EQUIPMENT AND HYDRAULIC OPTIONS

IMPORTANT NOTE: Field Installed LCS Joystick is very different from the factory installed multi-function loader joystick, and will have limited capabilities comparably.

FOR MORE INFORMATION ON FIELD INSTALLED LOADER OPTIONS SEE PAGE 50

Order Code	Catalog Number	Description	Approx. Weight (lb.)	List Price
BASE MACHINE - REQUIRED				**Group 01**
MF978	72533507	MF978 Base Loader	1675	10,581.00
		LOADER READY TRACTORS INCLUDE THE FACTORY INSTALLED LOADER SUB-FRAME MOUNTING KIT AND LOADER JOYSTICK FOR THE MF900 SERIES LOADER. ORDER THE LOADER MAIN FRAME, OPTIONS AND ATTACHMENTS TO COMPLETE LOADER.		
FIELD INSTALLED SUBFRAME MOUNTING KITS AND LCS HYDRAULICS				
		For MF7619, 7620, 7622 6 Cylinder, AGCO Power, Tier IVi, Dyna-6, Classic Edition		
	7633206M	Subframe Kit for MF7619, 7620, 7622 6 Cylinder AGCO Power Tier IVi Dyna-6 Classic Edition		2,959.00
Choose One	◆72533589M	LCS Joystick Control System, 2 Function Mechanical, Closed Center Load Sensing		1,450.00
	◆72533590M	LCS Joystick Control System, 3 Function Mechanical, Closed Center Load Sensing, Includes Live 3rd Function		2,410.00
	◆72533619M	LCS Joystick Control System, 2 Function Electric, Closed Center Load Sensing		3,349.00
	◆72533592M	LCS Joystick Control System, 3 Function Electric, Closed Center Load Sensing, Includes Live 3rd Function		4,307.00

◆ **Requires 4313756M91 and 3796801M1 from AGCO Parts to complete hydraulic connection**

MF 978 LOADER

MECHANICAL SELF-LEVELING

MASSEY FERGUSON®

Order Code	Catalog Number	Description	Approx. Weight (lb.)	List Price
FIELD INSTALLED SUBFRAME MOUNTING KITS AND LCS HYDRAULICS - CONTINUED				
	For MF7619, 7620, 7622 6 Cylinder, AGCO Power, Tier IVi, Dyna-6, Deluxe or Premium Editions			
	7633206M	Subframe Kit		2,959.00
Choose One	◆72533618M	LCS Joystick Control System, 2 Function Electric, Closed Center Load Sensing		3,349.00
	◆72533583M	LCS Joystick Control System, 3 Function Electric, Closed Center Load Sensing, Includes Live 3rd Function		4,307.00
	For 7619, 7620, 7622 6 Cylinder, AGCO Power, Tier IVi, Dyna-VT, Deluxe or Premium Editions			
	72533521M	Subframe Kit		2,959.00
Choose One	72533618M	LCS Joystick Control System, 2 Function Electric, Closed Center Load Sensing		3,349.00
	72533583M	LCS Joystick Control System, 3 Function Electric, Closed Center Load Sensing, Includes Live 3rd Function		4,307.00

◆ **Requires 4313756M91 and 3796801M1 from AGCO Parts to complete hydraulic connection**

MF 978 LOADER

MECHANICAL SELF-LEVELING

MASSEY FERGUSON®

Order Code	Catalog Number	Description	Approx. Weight (lb.)	List Price
HYDRAULIC OPTIONS				
		Only Compatible with Factory Installed Loader Ready Subframe and Hydraulic Service Sets		
	72556254M	Third Function Electric Diverter Valve . . . . . (Does not require Live 3rd Hose Kit)		823.00
	72533343M	4 Coupler Quick Release Single Lever . . . . . for Factory Installed Two Function Hydraulic Valve Sets		638.00
	72533351M	Field Installed Live 3rd Set . . . . . Which can be Added to Factory Installed Two Function Load Sensing Cable Operated Hydraulic Sets (For use with MF5400 Series)		1,048.00
	72533359M	Field Installed Live 3rd Set . . . . . Which can be Added to Factory Installed Two Function Load Sensing Cable Operated Hydraulic Sets (For use with Classic Versions MF6600 and MF7600 Series)		1,048.00
	72533344M	6 Coupler Quick Release Single Lever . . . . . Compatible when Adding a Field Installed Live 3rd to Factory Installed Two Function Cable Operated Valve		911.00
		Compatible with Field Installed Subframe and Hydraulic LCS Service Sets		
	72556254M	Third Function Electric Diverter Valve . . . . . (Does not require Live 3rd Hose Kit)		823.00
	72533573M	MC4 Multicoupler, 4 Coupler Quick Release . . . . . for Field Installed LCS Hydraulic Service Sets		618.00
	72533575M	MC2 Multicoupler, 2 Coupler Quick Release . . . . . for LCS "LIVE" 3rd Hydraulic Service Sets When ordering also order MC4 Multicoupler		526.00
ADDITIONAL HYDRAULIC OPTIONS				
		Compatible with Factory and Field Installed Subframe and Hydraulic Service Sets		
	72533568M	Soft Drive Ride Control System		907.00
	72533570M	Soft Drive Electric Shutoff Kit. . . . . Compatible with Soft Drive Control System above		420.00
	72533562M	Live 3rd Function Hose Kit . . . . . for Loader Boom with FLAT FACE Couplers (Compatible with 72533351,72533583)		320.00
	72533571M	Hydraulic Implement Locking Set . . . . . Requires 3rd Function to Operate		597.00
	72533576M	Selecto Fix Loader Part . . . . . (Flat Face Quick Release System for Hydraulic Implements) Requires 3rd Function		551.00
	72533577M	Selecto Fix Implement Part. . . . . (Flat Face Quick Release System for Hydraulic Implements) One Required with each Hydraulic Implement (Required with Selecto Fix Loader Part)		313.00

MF 978 LOADER

MECHANICAL SELF-LEVELING

MASSEY FERGUSON®

Order Code	Catalog Number	Description	Approx. Weight (lb.)	List Price
BUCKETS - OPTIONAL				
	72556038M	83" Material Bucket 210H, 29 cu ft (1.07 cu yds)	556	1,372.00
	72556039M	95" Material Bucket 240H, 34 cu ft (1.26 cu yds)	648	1,851.00
	72556042M	83" Heavy Duty Material Bucket 210HD, 29 cu ft (1.07 cu yds)	628	1,639.00
	72556043M	95" Heavy Duty Material Bucket 240HD, 34 cu ft (1.26 cu yds)	750	2,269.00
	72556044M	102" Heavy Duty Material Bucket 260HD, 36 cu ft (1.33 cu yds)	805	2,747.00
	72556048M	83" Construction Tooth Bucket 210HT, 29 cu ft (1.07 cu yds)	571	1,743.00
	72556261M	83" Heavy Duty High Volume Bucket 210HDV, 53 cu ft (1.96 cu yds)	917	2,218.00
	72556262M	95" Heavy Duty High Volume Bucket 240HDV, 60 cu ft (2.22 cu yds)	955	2,602.00
	72556263M	102" Heavy Duty High Volume Bucket 260HDV, 65 cu ft (2.4 cu yds)	1036	3,230.00
ATTACHMENTS - OPTIONAL				
	72556073M	Round Bale Spike	132	683.00
	72556285M	Big Bale Fork with Extension	273	966.00
	72556109M	95" Maxi-Grapple -240T (Tine Bucket)	1444	5,925.00
	72556110M	102" Maxi-Grapple -260T (Tine Bucket)	1610	6,393.00
	72556112M	95" Maxi-Grapple -240 (Standard Bucket)	1411	5,771.00
	72556113M	102" Maxi-Grapple -260 (Standard Bucket)	1567	6,113.00
	72556284M	48” Pallet Fork - 5,500 lbs (2,500 kg) Capacity	375	1,208.00
	72556115M	79" Wide (200 cm) Stone Fork	589	2,838.00
	72533693M	Log Grab (Requires 48" Pallet Fork)	187	1,847.00
	72556264M	63" FlexiGrip 160 (for Round Bales)	607	2,741.00
	72556265M	79" FlexiGrip 200 (for Round Bales)	686	2,974.00
	72556058M	92" QuadroGrip 200 (for Round or Square Bales)	916	4,542.00
ACCESSORIES - OPTIONAL				
	72556118M	Back Screen for Maxi Grapple	45	328.00
	72556070M	Weld-On Hook Set - (to Adapt Attachments)	30	231.00
	72556069M	Counterweight - 3-Point Hitch (Empty)	276	1,018.00
	72533580	French Language Package (Manual and Decal Kit)		No Charge

MASSEY FERGUSON®

MF 988 LOADER

MECHANICAL SELF-LEVELING

(F.O.B. Niagara Falls, Ontario or Telford, Tennessee)

FEATURES

- One Piece Main Frame Arms and Compression Molded Curved Cross Member
- Quick Attach Implement Mounting with Single Lever Locking System
- 6 mm High Tensile, Tapered Box Section Frame
- 70 mm Arm Profile
- 95 mm Double Acting Lift Cylinders
- 100 mm Double Acting, Equal Displacement Bucket Cylinders
- Industrial Grade Hydraulic Fittings and Hoses, Incorporated Internally Inside Loader Boom
- Central Valve, Equalized Oil Distribution Valve with Incorporated Relief Valves
- 4-Flat Face Hydraulic Tips on Boom and Bucket Circuits
- Protective Hose Cover
- Compatible with MF7624, 7626, 8600 Series
- Lock and Go Loader / Subframe Connection System
- Pivots are Greaseable and Include Industrial Grade Pins and Bushings
- Powder Painted with Corrosion Protection
- Bucket Level Indicator
- Front Bumper Guard (with Subframe Set)
- Buckets Have Heavy Duty, Welded-On Cutting Edge, Box Beam Section for Stiffness and Torsional Rigidity and Lateral Reinforcing Bars
- 195" (4.95 m) Lift Height to Pivot Pin
- 6107 lb. (2770 kg) Lift Capacity to Full Height, 31.5" (800 mm) Forward of Pivot Pin per ASABE 301.3 @ 2828 PSI

TRACTORS MUST BE PROPERLY BALLASTED FOR LOADER OPERATION. SEE OPERATOR'S MANUAL

NOTE: SPECIFICATIONS MAY VARY BETWEEN MODELS, TIRE EQUIPMENT AND HYDRAULIC OPTIONS

IMPORTANT NOTE: Field Installed LCS Joystick is very different from the factory installed multi-function loader joystick, and will have limited capabilities comparably.

FOR MORE INFORMATION ON FIELD INSTALLED LOADER OPTIONS SEE PAGE 50

Order Code	Catalog Number	Description	Approx. Weight (lb.)	List Price
BASE MACHINE - REQUIRED				**Group 01**
MF988	72533508	MF988 Base Loader	1847	13,799.00
		LOADER READY TRACTORS INCLUDE THE FACTORY INSTALLED LOADER SUB-FRAME MOUNTING KIT AND LOADER JOYSTICK FOR THE MF900 SERIES LOADER. ORDER THE LOADER MAIN FRAME, OPTIONS AND ATTACHMENTS TO COMPLETE LOADER.		
FIELD INSTALLED SUBFRAME MOUNTING KITS AND LCS HYDRAULICS				
		For MF7624, 7626 6 Cylinder, AGCO Power, Tier IVi, Dyna-6, Deluxe or Premium Editions		
	72533796M	Subframe Kit		3,536.00
Choose One	◆72533618M	LCS Joystick Control System, 2 Function Electric, Closed Center Load Sensing		3,349.00
	◆72533583M	LCS Joystick Control System, 3 Function Electric, Closed Center Load Sensing, Includes Live 3rd Function		4,307.00
		For MF7624 6 Cylinder, AGCO Power, Tier IVi, Dyna-VT, Deluxe or Premium Editions		
	72533522M	Subframe Kit		3,536.00
Choose One	72533618M	LCS Joystick Control System, 2 Function Electric, Closed Center Load Sensing		3,349.00
	72533583M	LCS Joystick Control System, 3 Function Electric, Closed Center Load Sensing, Includes Live 3rd Function		4,307.00
		For MF8650, 8660, 8670, 8680, 8690 6 Cylinder, AGCO Power, Tier IVi, Dyna-VT		
	72533358M	Subframe Kit	924	3,536.00
Choose One	72533620M	LCS Joystick Control System, 2 Function Electric, Closed Center Load Sensing		3,349.00
	72533555M	LCS Joystick Control System, 3 Function Electric, Closed Center Load Sensing, Includes Live 3rd Function		4,307.00

◆ **Requires 4313756M91 and 3796801M1 from AGCO Parts to complete hydraulic connection**

MF 988 LOADER

MECHANICAL SELF-LEVELING

MASSEY FERGUSON®

Order Code	Catalog Number	Description	Approx. Weight (lb.)	List Price
HYDRAULIC OPTIONS				
		Only Compatible with Factory Installed Loader Ready Subframe and Hydraulic Service Sets		
	72556255M	Third Function Electric Diverter Valve		823.00
	72533343M	4 Coupler Quick Release Single Lever for Factory Installed Two Function Hydraulic Valve Sets		638.00
	72533351M	Field Installed Live 3rd Set Which can be Added to Factory Installed Two Function Load Sensing Cable Operated Hydraulic Sets		1,048.00
	72533344M	6 Coupler Quick Release Single Lever Compatible when Adding a Field Installed Live 3rd to Factory Installed Two Function Cable Operated Valve		911.00
		Compatible with Field Installed Subframe and LCS Hydraulic Service Sets		
	72556255M	Third Function Electric Diverter Valve		823.00
	72533573M	MC4 Multicoupler, 4 Coupler Quick Release for Field Installed LCS Hydraulic Service Sets		618.00
	72533575M	MC2 Multicoupler, 2 Coupler Quick Release for LCS "LIVE" 3rd Hydraulic Service Sets When ordering also order MC4 Multicoupler		526.00
ADDITIONAL HYDRAULIC OPTIONS				
		Compatible with Factory and Field Installed Subframe and Hydraulic Service Sets		
	72533569M	Soft Drive Ride Control System		907.00
	72533570M	Soft Drive Electric Shutoff Kit Compatible with Soft Drive Control System above		420.00
	72533564M	Live 3rd Function Hose Kit for Loader Boom with FLAT FACE Couplers (Compatible with 72533351, 72533555, 72533583)		320.00
	72533572M	Hydraulic Implement Locking Set Requires 3rd Function to Operate		597.00
	72533576M	Selecto Fix Loader Part (Flat Face Quick Release System for Hydraulic Implements) Requires 3rd Function		551.00
	72533577M	Selecto Fix Implement Part (Flat Face Quick Release System for Hydraulic Implements) One Required with each Hydraulic Implement (Required with Selecto Fix Loader Part)		313.00

Mississippi State Contract Discount: 10%

MF 988 LOADER

MECHANICAL SELF-LEVELING

MASSEY FERGUSON®

Order Code	Catalog Number	Description	Approx. Weight (lb.)	List Price
BUCKETS - OPTIONAL				
	72556038M	83" Material Bucket 210H, 29 cu ft (1.07 cu yds)	556	1,372.00
	72556039M	95" Material Bucket 240H, 34 cu ft (1.26 cu yds)	648	1,851.00
	72556043M	95" Heavy Duty Material Bucket 240HD, 34 cu ft (1.26 cu yds)	750	2,269.00
	72556044M	102" Heavy Duty Material Bucket 260HD, 36 cu ft (1.33 cu yds)	805	2,747.00
	72556261M	83" Heavy Duty High Volume Bucket 210HDV, 53 cu ft (1.96 cu yds)	917	2,218.00
	72556262M	95" Heavy Duty High Volume Bucket 240HDV, 60 cu ft (2.22 cu yds)	955	2,602.00
	72556263M	102" Heavy Duty High Volume Bucket 260HDV, 65 cu ft (2.4 cu yds)	1036	3,230.00
ATTACHMENTS - OPTIONAL				
	72556073M	Round Bale Spike	132	683.00
	72556285M	Big Bale Fork with Extension	273	966.00
	72556109M	95" Maxi-Grapple -240T (Tine Bucket)	1444	5,925.00
	72556110M	102" Maxi-Grapple -260T (Tine Bucket)	1610	6,393.00
	72556112M	95" Maxi-Grapple -240 (Standard Bucket)	1411	5,771.00
	72556113M	102" Maxi-Grapple -260 (Standard Bucket)	1567	6,113.00
	72556284M	48” Pallet Fork - 5,500 lbs (2,500 kg) Capacity	375	1,208.00
	72556115M	79" Wide (200 cm) Stone Fork	589	2,838.00
	72533693M	Log Grab (Requires 48" Pallet Fork)	187	1,847.00
	72556264M	63" FlexiGrip 160 (for Round Bales)	607	2,741.00
	72556265M	79" FlexiGrip 200 (for Round Bales)	686	2,974.00
	72556058M	92" QuadroGrip 200 (for Round or Square Bales)	916	4,542.00
ACCESSORIES - OPTIONAL				
	72556118M	Back Screen for Maxi Grapple	45	328.00
	72556070M	Weld-On Hook Set - (to Adapt Attachments)	30	231.00
	72556069M	Counterweight - 3-Point Hitch (Empty)	276	1,018.00
	72533580	French Language Package (Manual and Decal Kit)		No Charge

Field Installed Loader Options

MASSEY FERGUSON®

ITEM	CATALOG #	DESCRIPTION	WEIGHT
4 Coupler Quick Release 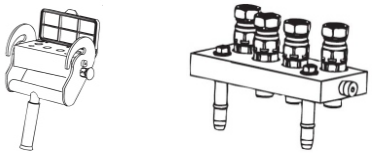	72533343M	4 Coupler Quick Release Compatible with Factory Installed Loader Valve	
6 Couple Quick Release	72533344M	6 Coupler Quick Release Single Lever Compatible When Adding a Field Installed Live 3rd to Factory Installed Two Function Cable Operated Valve	
Material Bucket	72556037M 72556038M 72556039M	73" Material Bucket, 25 cu ft 83" Material Bucket 210H, 29 cu ft 95" Material Bucket 240H, 34 cu ft	205kg 452lb 252kg 556lb 294kg 648lb
Heavy Duty Material Bucket	72556041M 72556042M 72556043M 72556044M	73" Heavy Duty Material Bucket 185HD, 25 cu ft 83" Heavy Duty Material Bucket 210HD, 29 cu ft 95" Heavy Duty Material Bucket 240HD, 34 cu ft 102" Heavy Duty Material Bucket 260HD, 36 cu ft	235kg 518lb 285kg 628lb 340kg 750lb 365kg 805lb
Heavy Duty High Volume Bucket	72556261M 72556262M 72556263M	83" Heavy Duty Volume Bucket 210HDV, 53 cu ft 95" Heavy Duty Volume Bucket 240HDV, 60 cu ft 102" Heavy Duty Volume Bucket 260HDV, 65.3 cu ft	917lb 955lb 1,036lb
Construction Tooth Bucket	72556046M 72556047M 72556048M	63" Construction Tooth Bucket 160HT, 23 cu ft 73" Construction Tooth Bucket 185HT, 25 cu ft 83" Construction Tooth Bucket 210HT, 29 cu ft	172kg 379lb 211kg 465lb 259kg 571lb
Light Material/Snow Bucket	72556049M 72556050M	79" Light Material / Snow Bucket, 41 cu ft 87" Light Material / Snow Bucket, 44 cu ft	273kg 602lb 294kg 648lb
Pallet Fork	72556283M 72556284M	48” Pallet Fork - 3,520 lbs (1,600 kg) Capacity 48” Pallet Fork - 5,500 lbs (2,500 kg) Capacity	160kg 353lb 170kg 375lb
Stone Fork	72556114M 72556115M	59" (150 cm) Stone Fork 79" (200 cm) Stone Fork	216kg 475lb 368kg 589lb
Bale Spike	72556073M	Round Bale Spike	60kg 132lb

Field Installed Loader Options

ITEM	CATALOG #	DESCRIPTION	WEIGHT
Big Bale Fork	72556285M	Big Bale Fork with Extension	124kg 273lb
Log Grab For all Pallet Fork Attachments	72533693M	Log Grab (Requires 48" Pallet Fork)	85kg 187lb
Flexigrip with Backstop	72556264M 72556265M	63" FlexiGrip 160 (for Round Bales) 79" FlexiGrip 200 (for Round Bales)	276kg 607lb 312kg 686lb
Quadrogrip with Backstop	72556058M	QuadroGrip (Round or Square Bales)	416kg 916lb
Maxi-Grapple **(BACK SCREEN NOT INCLUDED)** **GRAPPLE ASSEMBLY WITH BUCKET AND TINES** 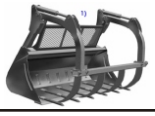	72556108M 72556109M 72556110M	83" Maxi-Grapple MK2 - T210 (Tine Bucket) 95" Maxi-Grapple MK2 - T 240 (Tine Bucket) 102" Maxi-Grapple MK2 - T 260 (Tine Bucket)	620kg 1367lb 655kg 1444lb 730kg 1610lb
Maxi-Grapple **(BACK SCREEN NOT INCLUDED) GRAPPLE ASSEMBLY COMPLETE (NO TINES)**	72556111M 72556112M 72556113M	83" Maxi-Grapple MK2 - 210 (Standard Bucket) 95" Maxi-Grapple MK2 - 240 (Standard Bucket) 102" Maxi-Grapple MK2 - 260 (Standard Bucket)	605kg 1334lb 640kg 1411lb 710kg 1567lb
Back Screen - For Maxi-Grapple	72556118M	Back Screen for Maxi-Grapple Assembly	
Counterweight Three Point Hitch (Empty)	72556069M	Counterweight - 3-Point Hitch (Empty)	125kg 276lb
Weld-On Hook Set	72556070M	Weld-On Hook Set (to Adapt Customers Attachments)	

Field Installed Loader Options

ITEM	CATALOG #	DESCRIPTION	WEIGHT
Selecto Fix Loader Part 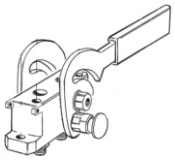	72533576M	Selecto Fix Loader Part (Flat Face Quick Release System for Hydraulic Implements) Requires 3rd Function	
Selecto Fix Implement Part 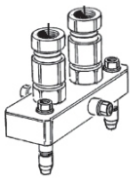	72533577M	Selecto Fix Implement Part (Flat Face Quick Release System for Hydraulic Implements) One Required with each Hydraulic Implement (Required with Selecto Fix Loader Part)	
Implement Lock 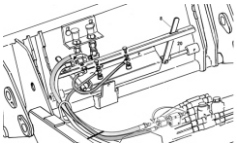	72533571M	Hydraulic Implement Locking Set, Requires Third Function to operate	
MC4 Multicoupler	72533573M	MC4 Multicoupler, 4 Coupler Quick Release for Field Installed LCS Hydraulic Service Sets	
MC2 Multicoupler	72533575M	MC2 Multicoupler, 2 Coupler Quick Release for Field Installed LCS "LIVE 3rd" hydraulic Service Sets, When ordering also order MC4 Multicoupler	

Mississippi State Contract Discount: 10%

MF L90 COMPACT LOADER

QUICK ATTACH MOUNT LOADER

MASSEY FERGUSON®

(F.O.B. SIOUX CITY, IOWA)

FEATURES

- One Piece Main Frame Arms and Cross Member
- Pedestal Mount Quick Attach with Safety Lock
- 3/16" Tapered Box Section Frame
- 2” Double Acting Lift Cylinders
- 1-1/2” Double Acting Bucket Cylinders
- Plated Steel Hydraulic Lines
- Bucket Level Indicator Standard
- Standard Grille Guard
- Fits MF1526 with AG, Turf, or R4 Tires
- With MF1526
  90.5" Lift Height
  823 lbs. Lift Capacity to Full Height @ Pivot Pin
  594 lbs. Lift Capacity to full height @ 19.5" forward of Pivot Pin

Note: Tractors must be ballasted properly for operator's safety
Note: Specifications will vary between models, tire equipment and hydraulic options.

Order Code	Catalog Number	Description	Approx. Weight (lb.)	List Price
For a Complete Loader, Select One Order Code from Group 01 and One Catalog Number from Group 02				
For Hydraulics and Buckets and Accessories, Select One or More Catalog Numbers as Required from Groups 03 and 04				
BASE MACHINE				**Group 01**
MF L90	4238073	Main Frame with 2” Lift and 1-1/2” Bucket Cylinders	344	1,980.00
MOUNTING KITS				**Group 02**
	4238226M	Mounting Kit and Grille Guard for 1526	184	663.00
HYDRAULICS				**Group 03**
	Loader Pedestal Mounted Joystick, 2 Spool Valve and Quick Couplers and Hoses			
	4238648M	For MF1526 Hydro	27	769.00
BUCKETS AND ATTACHMENTS				**Group 04**
	Can be used with or without Pin Type Quick Attach 9181908M			
	9181710M	48" Combination Bucket with Welded-On Edge	134	530.00
	5979712M	54" Combination Bucket with Welded-On Edge	150	614.00
	5979711M	60" Combination Bucket with Welded-On Edge	157	602.00
	9181908M	Bucket Quick Attach Kit with Pin Lock Allows Fast Interchange of Buckets and Other Accessories without the use of Tools	31	261.00
ACCESSORIES				**Group 05**
	7540500M	Tractor Grille Guard for MF1526 Without Loader		144.00

SUBJECT TO AVAILABILITY

MASSEY FERGUSON®

RESERVED

Mississippi State Contract Discount: 10%

MF L100 LOADER

QUICK ATTACH MOUNT LOADER

MASSEY FERGUSON®

(F.O.B. SIOUX CITY, IOWA)

FEATURES

- One Piece Main Frame Arms and Tubular Cross Member and Storage Stands Standard
- Quick Attach Mounting with Pin Lock
- 3/16" Tapered Box Section Frame
- 2” Double Acting Lift Cylinders
- 2” Double Acting Bucket Cylinders
- Pin Type Attachments
- Grille Guard and Rear Axle Supports Standard
- Grille Guard will hold up to ten 25 lbs. Suitcase Weights
- Plated Steel Hydraulic Lines
- Bucket Level Indicator Standard
- Wrap Around Welded on Cutting Edge
- Fits MF1529/32, MF1734/39E Tractors, with AG, R-4 or Turf Tires
- 92" Lift Height To Pivot on MF1529/33 Tractors
- 98" Lift Height @ Pivot Pins on 1529/1532
- 1282 LB. Lift Capacity to Full Height at Pivot Pin on MF 1529/32 Tractors
- 876 LB. Lift Capacity to Full Height @ 19.5 Inches on MF1529/32
- See Mounting Kits Group for Mower Compatibility
- Compatible with 1505 Mowers and CB10 Backhoe

SUBJECT TO AVAILABILITY

Order Code	Catalog Number	Description	Approx. Weight (lb.)	List Price
BASE MACHINE				**Group 01**
MFL100-BASE	4238027	L-100 Base Machine with 2" Lift and 2" Bucket Cylinders	383	2,108.00
MOUNTING KITS				**Group 02**
	4238200M	Mounting Kit for MF1529/32 Tractor with Grille Guard	300	971.00
	4238240M	Mounting Kit for MF1734/39E Tractor with Grille Guard	300	971.00
HYDRAULICS				**Group 03**
	4238602M	Loader Pedestal, Mounted Joystick, Two Spool Valve for MF1529/32 Tractors Includes 4 Valve Mounted Quick Couplers	29	815.00
	4238661M	Loader Pedestal, Mounted Joystick for MF1734/39E Tractors	29	815.00
	7541905M	60" Hose Kit (Required to Connect Loader Steel Lines to 1529/32 with Factory Joystick)	7	182.00
BUCKETS AND ATTACHMENTS - PIN TYPE				**Group 04**
	5980908M	Pin Type Quick Attach Kit Allows Fast Interchange of Buckets and Attachments without Tools	32	262.00
	5980712M	60" Standard Pin Type Material Bucket	207	688.00
	7113907M	Bucket Tooth Bar Edge 60" (Bucket Must be Drilled)	61	348.00
BUCKETS AND ATTACHMENTS - SKID STEER TYPE				**Group 05**
	7482715M	Skid Steer Type Bucket Quick Attach Kit	81	551.00
	4239032M	60" Skid Steer Material Bucket (Requires 7482715M)	221	649.00
ACCESSORIES				**Group 06**
	4239020M	Grille Guard for MF1529/32 and 1734E/39E Tractors without Loader	41	300.00

MASSEY FERGUSON®

RESERVED

Mississippi State Contract Discount: 10%

MF DL 120 COMPACT LOADER

QUICK ATTACH MOUNT LOADER

MASSEY FERGUSON®

(F.O.B. SIOUX CITY, IOWA)

FEATURES

- New Curved Upper Loader Arms
- Pedestal Mount Quick Attach with Safety Lock
- 3/16" Tapered Box Section Frame
- 2” Double Acting Lift Cylinders
- 2” Double Acting Bucket Cylinders
- Plated Steel Hydraulic Lines
- Optional Pin Type or Skid Steer Type Attachments
- Amplifying Links for Greater Bucket Dump and Curl
- Grille Guard will hold up to ten 25 lbs. Suitcase Weights
- Rear Axle Mount Support
- Bucket Level Indicator Standard
- Fits All MF1533, 1540, 1635, 1643, 1736, 1742 Tractors with AG, Turf, or R4 Tires
- With MF1635 and 1643 Tractors:
  102" Lift Height
  1900 lbs. Lift Capacity to Full Height @ Pivot Pin
  1314 lbs Lift Capacity to Full Height @ 19.5" forward of Pivot Pin

Note: Specifications will vary between models, tire equipment and hydraulic options.

Note: Liquid or cast ballast is Required for safety

SUBJECT TO AVAILABILITY

Order Code	Catalog Number	Description	Approx. Weight (lb.)	List Price
		For a Complete Loader, Select One Order Code from Group 01 and One Catalog Number from Group 02		
		For Hydraulics and Buckets and Accessories, Select One or More Catalog Numbers as Required from Groups 03 to 06		
BASE MACHINE				**Group 01**
MFDL120	4238024	Main Frame with 2" Lift and 2" Bucket Cylinders	494	2,288.00
MOUNTING KITS				**Group 02**
	4238216M	Mounting Kit with Grille Guard . . . . . for MF1533, 1540 and 1635 Tractors with AG, Turf or R4 Tires (Compatible with MF1505 Mowers)	285	1,071.00
	4238217M	Mounting Kit with Grille Guard for MF1643 Tractors . . . . . with AG, Turf or R4 Tires (**NOT** Compatible with MF1505 Mowers)	285	1,071.00
	4238232M	Mounting Kit with Grille Guard for MF1736 Tractors . . . . . with AG, Turf or R4 Tires		1,295.00
	4238233M	Mounting Kit with Grille Guard for MF1742 Tractors . . . . . with AG, Turf or R4 Tires		1,295.00
HOSE KITS				
	7541905M	60" Hose Kit **(Required to Connect Loader Steel . . . . . Lines to Factory Installed Joystick Valve,1533 and 1540 Midcouplers)**	7	182.00
	4238659M	Hose Kit for MF1736 and MF1742 Tractors . . . . . (Required to connect loader steel lines to factory installed tractor mid-valves)	9	211.00

NOT FOR SALE IN QUEBEC

MF DL 120 COMPACT LOADER

QUICK ATTACH MOUNT LOADER

(F.O.B. SIOUX CITY, IOWA)

MASSEY FERGUSON®

Order Code	Catalog Number	Description	Approx. Weight (lb.)	List Price
BUCKETS AND ATTACHMENTS - PIN TYPE				**Group 04**
		Can be used with or without Pin Type Quick Attach 7541709M		
	7541709M	Pin Type Quick Attach Kit - Allows Fast Interchange of Buckets and Attachments without Tools	26	225.00
	4239029M	60" Standard Pin Type Material Bucket	260	735.00
	4239030M	66" Standard Pin Type Material Bucket	260	776.00
	4239027M	66" Heavy Duty Pin Type Material Bucket Recommend 66" Reversible Cutting Edge	340	938.00
	7482909M	66" Reversible Cutting Edge for 66" HD Bucket	67	171.00
	7113907M	Bucket Tooth Bar Edge for 60" Bucket (Bucket Must be Drilled)	61	348.00
	7541706M	Fork Attachment Pin Type (Not for Handling Round or Square Bales)	200	871.00
	7541708M	Bucket Tooth Bar Edge for 66" Bucket (Bucket Must be Drilled)	71	348.00
	4239031M	72" Standard Pin Type Material Bucket Low Capacity 12.71 cu. ft. Struck Capacity	302	858.00
BUCKETS AND ATTACHMENTS - SKID STEER TYPE				**Group 05**
		Loader must be Equipped with Skid Steer Type Quick Attach 7541710M		
	7541710M	Skid Steer Type Bucket Quick Attach Kit	80	486.00
	4239026M	66" Heavy Duty Skid Steer Type Material Bucket (Recommend 66" Reversible Cutting Edge)	300	942.00
	7482909M	66" Reversible Cutting Edge for 66" HD Bucket	67	171.00
	7541708M	Bucket Tooth Bar Edge for 66" Bucket (Bucket Must be Drilled)	71	348.00
	4239028M	72" Heavy Duty Skid Steer Type Material Bucket (Low Capacity) 12.71 cu. ft. Struck Capacity	332	950.00
	7112704M	72" Reversible Bolt on Cutting Edge for 72" HD Bucket	72	173.00
ACCESSORIES				**Group 06**
	4239020M	Grille Guard for MF1533, 1540, 1547, 1552, 1560 1635, 1643, 1736 and 1742 **WITHOUT** Loader	41	300.00

SUBJECT TO AVAILABILITY

NOT FOR SALE IN QUEBEC

Mississippi State Contract Discount: 10%

MF DL130 COMPACT LOADER

QUICK ATTACH MOUNT LOADER

MASSEY FERGUSON®

(F.O.B. SIOUX CITY, IOWA)

FEATURES

- New Curved Upper Loader Arms
- Pedestal Mount Quick Attach with Safety Lock
- 3/16" Tapered Box Section Frame
- 2.5” Double Acting Lift Cylinders
- 2.5” Double Acting Bucket Cylinders
- Plated Steel Hydraulic Lines
- Optional Pin Type or Skid Steer Type Attachments
- Amplifying Links for Greater Bucket Dump and Curl
- Grille Guard will hold up to ten 25 lbs. Suitcase Weights
- Rear Axle Mount Support
- Fits 1547, 1552, 1560, 1648, 1652, 1655, 1660, 1749, 1754 with PowerShuttle, and 1759 Tractors with AG, Turf or R4 Tires
- With MF1547/52 and 1648/52/55
  113.5" Lift Height
  2527 lbs. Lift Capacity to Full Height @ Pivot Pin
  1803 lbs. Lift Capacity to Full Height @ 19.5" forward of Pivot
- Bucket Level Indicator Standard

Note: *Specifications will vary between models, tire equipment and hydraulic options.*

Note: *Liquid or cast ballast is required for safety*

SUBJECT TO AVAILABILITY

Order Code	Catalog Number	Description	Approx. Weight (lb.)	List Price
		For a Complete Loader, Select One Order Code from Group 01 and One Catalog Number from Group 02		
		For Hydraulics and Buckets and Accessories, Select One or More Catalog Numbers as Required from Groups 03 to 06		
BASE MACHINE				**Group 01**
MFDL130	4238017	Main Frame with 2.5" Lift and 2.5" Bucket Cylinders	708	2,763.00
MOUNTING KITS				**Group 02**
	4238218M	Mounting Kit with Grille Guard for MF1648/52/55 Tractors . . . and MF1547/52 Tractors with AG, Turf or R4 Tires	380	1,449.00
	4238219M	Mounting Kit with Grille Guard for MF1660 and 1560 Tractors . with AG or R4 Tires	342	1,489.00
	4238234M	Mounting Kit with Grille Guard for MF1749 Tractors . . . . . with AG, Turf or R4 Tires		1,595.00
	4238235M	Mounting Kit with Grille Guard for MF1754 (PowerShuttle Only) . with AG, Turf or R4 Tires		1,595.00
	4238242M	Mounting Kit with Grille Guard for MF1754 H and MF1758 H . with AG, Turf or R4 Tires		1,595.00
	4238236M	Mounting Kit with Grille Guard for MF1759 Tractors . . . . . with AG, Turf or R4 Tires		1,595.00
HOSE KITS				
	7542908M	60" Hose Kit **(Required to Connect Loader Steel Lines to Factory Installed Joystick Valve with Mid Couplers)** .	9	211.00
	4238660M	Hose Kit for MF1749, MF1754, MF1758 and MF1759 . . . . . (Required to connect loader steel lines to factory installed tractor mid-valves)	9	211.00

NOT FOR SALE IN QUEBEC

MF DL130 COMPACT LOADER

QUICK ATTACH MOUNT LOADER

MASSEY FERGUSON®

Order Code	Catalog Number	Description	Approx. Weight (lb.)	List Price
BUCKETS AND ATTACHMENTS - PIN TYPE				**Group 04**
		Can be used with or without Pin Lock Quick Attach 7542709M		
	7542709M	Pin Type Quick Attach Kit - Allows Fast Interchange of Buckets and Attachments without Tools	50	282.00
	7542700M	72" Standard Pin Type Material Bucket	355	853.00
	7644700M	72" Heavy Duty Material Bucket with Welded-on Grapple Fork Mtg Plates (Drilled for Cutting Edge)	465	1,144.00
	7112704M	72" Reversible Bolt on Cutting Edge for 72" HD Bucket	72	173.00
	7542705M	Pallet Fork Attachment Pin Type (Not for Handling Round or Square Bales)	343	1,061.00
	7542707M	Bale Spear Pin Type	208	616.00
	7644702M	Grapple Fork for 72" HD Pin and Skid Steer Type Buckets with Mounting Plates Installed (Requires Third Spool Hydraulics) (Tooth Bar Recommended with Grapple Fork)	344	2,117.00
BUCKETS AND ATTACHMENTS - SKID STEER TYPE				**Group 05**
		Loader must be Equipped with Skid Steer Quick Attach 7542710M		
	7542710M	Skid Steer Type Bucket Quick Attach Kit	110	678.00
	4239026M	66" Heavy Duty Skid Steer Type Material Bucket (Recommend 66" Reversible Cutting Edge)	300	942.00
	7482909M	66" Reversible Cutting Edge for 66" HD Bucket	67	171.00
	7541708M	Bucket Tooth Bar Edge for 66" Bucket (Bucket Must be Drilled)	71	348.00
	7644701M	72" Heavy Duty Skid Steer Material Bucket with Welded-on Grapple Fork Plates (Drilled for Cutting Edge)	425	1,102.00
	7112704M	72" Reversible Bolt on Cutting Edge for 72" HD Bucket	72	173.00
	7542708M	Bale Spear Skid Steer Type	195	678.00
	7644702M	Grapple Fork for 72" HD Pin and Skid Steer Type Buckets with Mounting Plates Installed (Requires Third Spool Hydraulics) (Tooth Bar Recommended with Grapple Fork)	344	2,117.00
ACCESSORIES				**Group 06**
	4239020M	Grille Guard for MF1533, 1540, 1547, 1552, 1560, 1648, 1652, 1655, 1660, 1749, 1754, 1758, 1759 **Without** Loader	41	300.00
	7542712M	Conversion Adapter to Allow Use of 1040 and 1055 Hook Type Attachments	115	370.00

SUBJECT TO AVAILABILITY

NOT FOR SALE IN QUEBEC

Mississippi State Contract Discount: 10%

MF L210

QUICK ATTACH MOUNT LOADER

MASSEY FERGUSON®

(F.O.B. SIOUX CITY, IOWA)

FEATURES

- Wrap Around Quick Attach Mount Loader
- 3/16" Tapered Box Section Main Frame
- Two 2-1/2" Double Acting Lift Cylinders
- Two 2" Double Acting Bucket Cylinders
- 0-Ring Fittings - JIC Threads
- Rod Style Bucket Level Indicator Optional
- Pin Type and Skid Steer Attachments Available
- Amplifying Links for Greater Dump and Curl
- Tie-Bar with Headlight Clearance Holes
- Front Guard Bar Standard
- Fits: MF2605 and 2615 3-Cylinder and MF2625 and 2635 4-Cylinder 2wd Tractors Only
- Fits: 533, 543, 563 2wd
- Rated on a 2605/2615 2wd with 7.5 - 16 Front Tires and 16.9R28 Rear Tires
- Lift Capacity to Full Height on 2600's:
  -2650 lbs @ Pivot Pins
  -1673 lbs @ 800 mm Forward Pivot Pins
- Lift Height 111" @ Pivot Pins on 2600's
- Lift Capacity Compact Tractors:
  1932 lbs @ Pivot Pins
  1800 lbs @ 31.5" Forward Pivot Pins
- Breakout Force: 2859 lbs @ 800 mm Forward Pivot Pins

Note: Specifications will vary between Models, Tire Equipment and Hydraulic options.

Note: Tractors must be Ballasted with Liquid Ballast and/or Cast Iron Wheel Weights.

For a Complete Loader, Select One Order Code from Group 01, One Catalog Number from Group 02

For Buckets, Hydraulics and Accessories Order as Required From Groups 03 and 04

Order Code	Catalog Number	Description	Approx. Weight (lb.)	List Price
BASE MACHINE				**Group 01**
MFL210-BASE	4238029	Main Frame with 2-1/2" Lift and 2" Bucket Cylinders	762	2,739.00
MOUNTING KITS				**Group 02**
	4238208M	Mounting Kit for 2605 and 2615 - 3 Cylinder 2wd . . . . . (Includes Grille Guard)	217	789.00
	4238209M	Mounting Kit for 2625 and 2635 - 4 Cylinder 2wd . . . . . (Includes Grille Guard)	169	753.00
		*** For Non-Current Models, Please Call Dealer Central**		
HYDRAULICS				**Group 03**
	4238630M	Pedestal Mounted Valve for 2600 Tractors . . . . . with or without Auxiliary	63	925.00

SUBJECT TO AVAILABILITY

MF L210

QUICK ATTACH MOUNT LOADER

MASSEY FERGUSON®

Order Code	Catalog Number	Description	Approx. Weight (lb.)	List Price
HYDRAULICS CONTINUED				
		Field Installed Loader Mounted Hydraulic Valves		
	4238628M	**Fits Models: All Utility Tractors** . . . . . Includes: Field Installed Joystick with 2 Spool, Float Position (Requires Hose Kit 5087924M to connect to Tractor Remotes) Or (Requires Pump Kit and Auxiliary Reservoir) Note: Not for Use with 4200 or 4300 Series Tractors		1,103.00
BUCKETS AND ATTACHMENTS - PIN TYPE				**GROUP 4**
	Pin Type Attachments			
	Can be Used With or Without Pin Type Quick Attach 7542709M			
	7542709M	Pin Type Quick Attach Kit - Allows Fast Interchange of . . . . Buckets and Attachments without Tools	50	282.00
	4239002M	66" Standard Duty Pin Type Bucket	391	787.00
	7541708M	Bucket Tooth Bar Edge for 66" Bucket . . . . . (Bucket Must be Drilled)	71	348.00
	7542700M	72" Standard Pin Type Material Bucket	355	853.00
	7644700M	72" Heavy Duty Material Bucket with Welded-on. . . . . Grapple Fork Mtg Plates (Drilled for Cutting Edge)	465	1,144.00
	7112704M	72" Reversible Bolt on Cutting Edge for 72" HD Bucket	72	173.00
	7542707M	Round Bale Spear	208	616.00
	7542705M	Pallet Fork Attachment Pin Type . . . . . Not for Handling Round or Square Bales	343	1,061.00
	7644702M	Grapple Fork for 72" HD Pin and Skid Steer Type Buckets . . (Requires Third Spool Hydraulics) (Tooth Bar Recommended with Grapple Fork)	344	2,117.00

SUBJECT TO AVAILABILITY

MF L210

QUICK ATTACH MOUNT LOADER

MASSEY FERGUSON®

Order Code	Catalog Number	Description	Approx. Weight (lb.)	List Price
BUCKETS AND ATTACHMENTS - SKID STEER TYPE				**Group 05**
	Must Be Equipped with Skid Steer Quick Attach 7542710M			
	7542710M	Skid Steer Type Bucket Quick Attach Kit	110	678.00
	4239026M	66" Heavy Duty Skid Steer Type Material Bucket (Recommend 66" Reversible Cutting Edge)	300	942.00
	7482909M	66" Reversible Cutting Edge for 66" HD Buckets	67	171.00
	7541708M	Bucket Tooth Bar Edge for 66" Bucket (Bucket Must Be Drilled)	71	348.00
	7644701M	72" Heavy Duty Skid Steer Material Bucket with Welded-on Grapple Fork Plates (Drilled for Cutting Edge)	425	1,102.00
	7112704M	72" Reversible Bolt on Cutting Edge for 72" HD Buckets	72	173.00
	7542708M	Round Bale Spear	195	678.00
	7644702M	Grapple Fork for 72" HD Pin and Skid Steer Type Buckets with Mounting Plates Installed (Requires Third Spool Hydraulics) (Tooth Bar Recommended with Grapple Fork)	344	2,117.00
OPTIONAL				
	4239003M	Grille Guard for 2605 and 2615 - 3 Cylinder 2wd (Without L210 Loader)	42	224.00
	4239004M	Grille Guard for 2625 and 2635 - 4 Cylinder (Without L210 Loader)	29	224.00
HORIZONTAL EXHAUST ADAPTER KITS				
	4239021M	Horizontal Exhaust Adapter for MF2605	7	109.00

SUBJECT TO AVAILABILITY

MASSEY FERGUSON®

RESERVED

Mississippi State Contract Discount: 10%

MF DL260 LOADER

QUICK ATTACH MOUNT LOADER

MASSEY FERGUSON®

(F.O.B. SIOUX CITY, IOWA)

FEATURES

- 'New' Curved Upper Loader Arms
- Quick Attach Loader Mounting with Safety Lock
- 3/16" High Tensile - Tapered Box Section Main Frame
- Two 3" Double Acting Lift Cylinders
- Two 2-3/4" Double Acting Bucket Cylinders
- 0-Ring - JIC Fittings
- Bucket Level Indicator Standard

- Rated on MF2660HD-4wd with 11.2-24 Front and 16.9-30 Rear Tires

- Lift Capacity to Full Height:
  3200 lbs @ Pivot Pins
  2280 lbs @ 31.5" Forward Pivot Pins

- Lift Height: 128" @ Pivot Pins
- Breakout Force: 3100 lbs @ Cutting Edge
- Rated Pressure: 2500 PSI

- Fits: MF4609, 4610, 2650 HD, 2660 HD, 2670 HD, 2680 HD, 573, 583, 593, 596 Cab or Platform, 2wd and 4wd, Standard or Low Profile
- Fits: 5450 Cab
- Rated on MF5450 with 380/70R28 Front and 480/70R38 Rear Tires

NOTE: When using 12.4-R24 front tires on the MF3600 Series, the tread setting must be equal to 72" to avoid interference with the loader

NOTE: Loader is not compatible with front fenders on the MF500, MF2600 HD, MF5450 Series Tractors

- Lift Capacity to Full Height:
  3430 lbs @ Pivot Pins
  2400 lbs @ 31.5" Forward Pivot Pins

- Lift Height: 128" @ Pivot Pins
- Breakout Force: 3350 lbs @ Cutting Edge
- Rated Pressure: 2650 PSI

SUBJECT TO AVAILABILITY

Note: Specifications Will Vary Between Models, Tire Size and Hydraulic Options.

Order Code	Catalog Number	Description	Approx. Weight (lb.)	List Price
		For a Complete Loader, Select One Order Code from Group 01 and One Catalog Number from Group 02		
		For Hydraulics and Buckets and Accessories, Select One or More Catalog Numbers as Required from Groups 03, 04 and 05		
BASE MACHINE				**Group 01**
MFDL260	4238031	Main Frame with 3" Lift and 2-3/4" Bucket Cylinders	839	3,631.00
MOUNTING KITS				**Group 02**
	4238231M	Mounting Kit for MF 4609 and 4610 Models . . . . . Joystick must be Ordered with Tractor		1,990.00
	4238223M	Mounting Kit for 2650 HD or 2660 HD, 573 or 583 . . . . . (Cab or Platform) 2wd and 4wd with Grille Guard (2650HD and 2660HD Low Profile Tractors Require 4239035 Horizontal Exhaust Pipe)	500	2,095.00
	4238224M	Mounting Kit for 2670 HD or 2680 HD, 593 or 596 . . . . . (Cab or Platform) 2wd and 4wd with Grille Guard (for use with 13.6-24 4WD Front Tires Only) (2650HD and 2660HD Low Profile Tractors Require 4239035 Horizontal Exhaust Pipe)	504	2,050.00
	4238228M	Mounting Kit for MF5450 with Grille Guard	485	2,672.00

NOT FOR SALE IN QUEBEC

MF DL260 LOADER

QUICK ATTACH MOUNT LOADER

MASSEY FERGUSON®

Order Code	Catalog Number	Description	Approx. Weight (lb.)	List Price
HYDRAULICS - VALVE KITS				**Group 03**
	4238646M	Cable Controlled Joystick Valve for MF2650HD, 2660HD, MF2670HD and MF2680HD **PLATFORM** Tractors. Tractor mounted HD Joystick control and cable operated valve with float (valve mounts to loader pedestal). Individual couplers are located on the loader pedestal; leaves tractor remotes free; remains on tractor when loader is removed; includes all hoses, couplers and hardware	85	1,327.00
	4238647M	Cable Controlled Joystick Valve for MF2650HD, 2660HD, MF2670HD and MF2680HD **Cab** Tractors. Tractor mounted HD Joystick control and cable operated valve with float (valve mounts to loader pedestal). Individual couplers are located on the loader pedestal; leaves tractor remotes free; remains on tractor when loader is removed; includes all hoses, couplers and hardware	85	1,327.00
	7644502M	Solenoid Kit for 573, 583, 593, 596, 2650HD, 2660HD, 2670HD, 2680HD to Provide Third Spool Hydraulic Function	29	779.00
	72530394M	Dealer Installed Loader Joystick and Mid Valves for use with MF4600 Series Tractors WITHOUT Factory Joystick and Mid Valves **(Order separately from Loader)**		1,313.00
HOSE KITS				
	4238654M	Hose Kit - MF4600		357.00
BUCKETS AND ATTACHMENTS - PIN TYPE				**Group 04**
	Can Be Used WITHOUT Quick Attach Kit or WITH Pin Lock Quick Attach Kit #7542709M			
	7542709M	Pin Type Quick Attach Kit - Allows Fast Interchange of Buckets and Attachments without Tools	50	282.00
	7542700M	72" Standard Pin Type Material Bucket	355	853.00
	7644700M	72" Heavy Duty Material Bucket with Welded-on Grapple Fork Mtg Plates (Drilled for Cutting Edge)	465	1,144.00
	7542707M	Round Bale Spear with Forged, Tapered Spear and Back Stop (2000 Lb. Bale Maximum Weight) **(Requires Quick Attach Kit # 7542709M)**	208	616.00
	7542705M	Pallet Fork Attachment Pin Type. (Not for Handling Round or Square Bales)	343	1,061.00
	7644702M	Grapple Fork for 72" HD Pin and Skid Steer Type Buckets with Mounting Plates Installed (Requires Third Spool Hydraulics) (Tooth Bar Recommended with Grapple Fork)	344	2,117.00
	4239007M	84" Medium Duty Bucket (Drilled for Cutting Edge)	485	1,181.00

NOT FOR SALE IN QUEBEC

SUBJECT TO AVAILABILITY

MF DL260 LOADER

QUICK ATTACH MOUNT LOADER

MASSEY FERGUSON®

Order Code	Catalog Number	Description	Approx. Weight (lb.)	List Price
BUCKETS AND ATTACHMENTS - SKID STEER TYPE				**Group 05**
		Loader Must Be Equipped with Optional Skid Steer Attaching Kit #7542710M		
	7542710M	Skid Steer Type Bucket Quick Attach Kit	110	678.00
	7644701M	72" Heavy Duty Skid Steer Material Bucket with Welded-on Grapple Fork Plates (Drilled for Cutting Edge)	425	1,102.00
	4239036M	84" Heavy Duty Skid Steer Bucket with Welded-on Grapple Fork Mount (Drilled for Cutting Edge)	554	1,645.00
	7542708M	Round Bale Spear with Forged, Tapered Spear and Back Stop (2000 Lb. Bale Maximum Weight)	195	678.00
	7644702M	Grapple Fork for 72" HD Pin and Skid Steer Type Buckets with Mounting Plates Installed (Requires Third Spool Hydraulics) (Tooth Bar Recommended with Grapple Fork)	344	2,117.00
	7115902M	84” Reversible Bolt on Cutting Edge for 84” HD Bucket	114	204.00
	7112704M	72" Reversible Bolt on Cutting Edge for 72" HD Bucket	72	173.00
ACCESSORIES				**Group 06**
	4239038M	Grille Guard for MF4600 Series		112.00
	4239037M	Grille Guard Kit for MF5450 without Loader	66	316.00
	4239035M	Horizontal Exhaust Kit for MF2600HD LP Series with Loader (Required on Low Profile Tractors with Loader)		104.00
	72530394M	Dealer Installed Loader Joystick and Mid Valves for use with MF4600 Series Tractors WITHOUT Factory Joystick and Mid Valves **(Order separately from Loader)**		1,313.00

SUBJECT TO AVAILABILITY

NOT FOR SALE IN QUEBEC

MASSEY FERGUSON®

RESERVED

Mississippi State Contract Discount: 10%

MF DL260MSL LOADER

QUICK ATTACH MOUNT LOADER

MASSEY FERGUSON®

(F.O.B. SIOUX CITY, IOWA)

FEATURES

- 'New' Curved Upper Loader Arms
- Quick Attach Loader Mounting with Safety Lock
- 3/16" High Tensile - Tapered Box Section Main Frame
- Two 3” Double Acting Lift Cylinders
- Two 2-3/4” Double Acting Bucket Cylinders
- 0-Ring - JIC Fittings
- Bucket Level Indicator Standard

- Rated on MF2660HD-4wd with 11.2-24 Front and 16.9-30 Rear Tires

- Lift Capacity to Full Height:
  3200 lbs @ Pivot Pins
  2280 lbs @ 31.5" Forward Pivot Pins

- Lift Height: 128" @ Pivot Pins
- Breakout Force: 3100 lbs @ Cutting Edge
- Rated Pressure: 2500 PSI

- Fits: MF4609, 4610, 2650 HD, 2660 HD, 2670 HD, 2680 HD, 573, 583, 593, 596 Cab or Platform, Standard or Low Profile and 5450 Cab

- Rated on MF5450 with 380/70R28 Front and 480/70R38 Rear Tires

NOTE: Loader is not compatible with front fenders on the MF500, MF2600 HD, MF5450 Series Tractors

- Lift Capacity to Full Height:
  3430 lbs @ Pivot Pins
  2400 lbs @ 31.5" Forward Pivot Pins

- Lift Height: 128" @ Pivot Pins
- Breakout Force: 3350 lbs @ Cutting Edge
- Rated Pressure: 2650 PSI

SUBJECT TO AVAILABILITY

Note: Specifications Will Vary Between Models, Tire Size and Hydraulic Options.

Order Code	Catalog Number	Description	Approx. Weight (lb.)	List Price

For a Complete Loader, Select One Order Code from Group 01 and One Catalog Number from Group 02

For Hydraulics and Buckets and Accessories, Select One or More Catalog Numbers as Required from Groups 03, 04 and 05

BASE MACHINE				**Group 01**
MFDL260MSL	4238077	Main Frame with 3” Lift and 2-3/4” Bucket Cylinders	990	4,555.00

MOUNTING KITS				**Group 02**
	4238231M	Mounting Kit for MF4609 and 4610 . . . . . Joystick must be Ordered with Tractor		1,990.00
	4238223M	Mounting Kit for 2650HD or 2660HD, 573 or 583 . . . . . (Cab or Platform) 2wd and 4wd with Grille Guard (Low Profile Tractors Require Horizontal Exhaust Adaptor)	500	2,095.00
	4238224M	Mounting Kit for 2670HD or 2680HD, 593 or 596 . . . . . (Cab or Platform) 2wd and 4wd with Grille Guard (for use with 13.6-24 Tires Only) (Low Profile Tractors Require Horizontal Exhaust Adaptor)	504	2,050.00
	4238228M	Mounting Kit for MF5450 with Grille Guard	485	2,672.00

NOT FOR SALE IN QUEBEC

Mississippi State Contract Discount: 10%

MF DL260MSL LOADER

QUICK ATTACH MOUNT LOADER

MASSEY FERGUSON®

Order Code	Catalog Number	Description	Approx. Weight (lb.)	List Price
HYDRAULICS - VALVE KITS				**Group 03**
	4238646M	Cable Controlled Joystick Valve for MF2650HD, 2660HD, MF2670HD and MF2680HD **PLATFORM** Tractors. Tractor mounted HD Joystick control and cable operated valve with float (valve mounts to loader pedestal). Individual couplers are located on the loader pedestal; leaves tractor remotes free; remains on tractor when loader is removed; includes all hoses, couplers and hardware	85	1,327.00
	4238647M	Cable Controlled Joystick Valve for MF2650HD, 2660HD, MF2670HD and MF2680HD **CAB** Tractors. Tractor mounted HD Joystick control and cable operated valve with float (valve mounts to loader pedestal). Individual couplers are located on the loader pedestal; leaves tractor remotes free; remains on tractor when loader is removed; includes all hoses, couplers and hardware	85	1,327.00
	72530394M	Dealer Installed Loader Joystick and Mid Valves for use with MF4600 Series Tractors WITHOUT Factory Joystick and Mid Valves **(Order separately from Loader)**		1,313.00
HOSE KITS				
	4238654M	Hose Kit - MF4600		357.00
BUCKETS AND ATTACHMENTS - PIN TYPE				**Group 04**
		Can Be Used WITHOUT Quick Attach Kit or WITH Pin Lock Quick Attach Kit #7542709M		
	7542709M	Pin Type Quick Attach Kit - Allows Fast Interchange of Buckets and Attachments without Tools	50	282.00
	7542700M	72" Standard Pin Type Material Bucket	355	853.00
	7644700M	72" Heavy Duty Material Bucket with Welded-on Grapple Fork Mtg Plates (Drilled for Cutting Edge)	465	1,144.00
	7542707M	Round Bale Spear with Forged, Tapered Spear and Back Stop (2000 Lb. Bale Maximum Weight) **(Requires Quick Attach Kit # 7542709M)**	208	616.00
	7542705M	Pallet Fork Attachment Pin Type (Not for Handling Round or Square Bales)	343	1,061.00
	7644702M	Grapple Fork for 72" HD Pin and Skid Steer Type Buckets with Mounting Plates Installed (Requires Third Spool Hydraulics) (Tooth Bar Recommended with Grapple Fork)	344	2,117.00
	4239007M	84" Medium Duty Bucket (Drilled for Cutting Edge)	485	1,181.00

SUBJECT TO AVAILABILITY

NOT FOR SALE IN QUEBEC

Mississippi State Contract Discount: 10%

MF DL260MSL LOADER

QUICK ATTACH MOUNT LOADER

MASSEY FERGUSON®

Order Code	Catalog Number	Description	Approx. Weight (lb.)	List Price
BUCKETS AND ATTACHMENTS - SKID STEER TYPE				**Group 05**
	Loader Must Be Equipped with Optional Skid Steer Attaching Kit #7542710M			
	7542710M	Skid Steer Type Bucket Quick Attach Kit	110	678.00
	7644701M	72" Heavy Duty Skid Steer Material Bucket with Welded-on Grapple Fork Plates (Drilled for Cutting Edge)	425	1,102.00
	4239036M	84" Heavy Duty Skid Steer Bucket with Welded-on Grapple Fork Mount (Drilled for Cutting Edge)	554	1,645.00
	7542708M	Round Bale Spear with Forged, Tapered Spear and Back Stop (2000 Lb. Bale Maximum Weight)	195	678.00
	7644702M	Grapple Fork for 72" HD Pin and Skid Steer Type Buckets With Mounting Plates Installed (Requires Third Spool Hydraulics) (Tooth Bar Recommended with Grapple Fork)	344	2,117.00
	7115902M	84” Reversible Bolt on Cutting Edge for 84” HD Bucket	114	204.00
	7112704M	72" Reversible Bolt on Cutting Edge for 72" HD Bucket	72	173.00
ACCESSORIES				**Group 06**
	4239038M	Grille Guard for MF4600 Series		112.00
	4239035M	Horizontal Exhaust Kit for MF2600HD LP Series with Loader (Required on Low Profile Tractors with Loader)		104.00
	4239037M	Grille Guard Kit for MF5450 without Loader	66	316.00

SUBJECT TO AVAILABILITY

NOT FOR SALE IN QUEBEC

MASSEY FERGUSON®

RESERVED

Mississippi State Contract Discount: 10%

MF DL280 LOADER

QUICK ATTACH MOUNT LOADER

MASSEY FERGUSON®

(F.O.B. SIOUX CITY, IOWA)

FEATURES

- New Curved Upper Loader Arms
- Pedestal Mount Quick Attach Loader with Safety Lock
- 3/16" High Tensile - Tapered Box Section Main Frame
- Optional Lift and Bucket Cylinders
  -2.75" Lift Cylinder (14 GPM and below)
- 'Quick Lock' Bucket Attachment System
- Amplifying Links Give Bucket 53 Degree Dump and 43 Degree Curl
- Bucket Level Indicator Standard
- 3/4" x 6" Welded On Cutting Edge - Standard
- Optional 5/8" x 8" Bolt On Reversible Cutting Edge for Heavy Duty Buckets
- MFDL280 Loader Allows the Use of Tractor Hydraulic Controls or 'Quick Couple' Remote Joystick Valve
- Optional Dealer Installed Hydraulic Self Leveling
- Optional Zero Leak, Flat Face Coupler Hydraulic Conversion Kit
- Cycle Time Will Vary With Tractor Hydraulic Capacity
- For MF593, 596, 2670 HD, 2680 HD - Cab or Platform
- Rated on MF5455 with 14.9-24 Front & 15.5-38 Rear Tires.
  Maximum Lift Height - 142" @ Pivot Pin
  Lift Capacity to Full Height - 3500 lbs @31.5" forward pivot
  @ Pivot Pins - 4817 lbs
  Breakout Force - 4216 lbs @ 31.5" forward pivot
- Maximum Front Tire of **14.9-24** with or without Fenders
  All Larger Tires will Limit Steering Angle, Oscillation, and Digging Depth or may not be compatible at all with a loader

Note: *Specifications Will Vary Between Models, Tire Size, Hydraulics and Lift Cylinder Attaching Point Selection.*

Note: *Rear Tire Ballasting Required: Liquid Ballasting and/or Cast Iron Wheel Weights*

Note: ***Not Compatible with Front Fenders***

Order Code	Catalog Number	Description	Approx. Weight (lb.)	List Price

For a Complete Loader, Select One Order Code from Group 01 and One Catalog Number from Group 02

For Hydraulics, Buckets and Accessories, Select One or More Catalog Numbers as Required from Groups 04 and 05

BASE MACHINE — Group 01

MFDL280-CY04	4238033	Main Frame with 2-3/4" Lift and 2-1/2" Bucket Cylinders . . . . (for HD 2600 Series) **(Recommended for tractor hydraulic flow of 14 GPM or less) (Will not work with hydraulic self leveling)**	1315	4,435.00

MOUNTING KITS — Group 02

	4238225M	Mounting Kit for MF2670HD, 2680HD, 593, 596 with Grille Guard (not for Low Profile Tractors)	519	2,672.00

SUBJECT TO AVAILABILITY

NOT FOR SALE IN QUEBEC

MF DL280 LOADER

QUICK ATTACH MOUNT LOADER

MASSEY FERGUSON®

Order Code	Catalog Number	Description	Approx. Weight (lb.)	List Price
HYDRAULICS				**Group 03**
	4238646M	Cable Controlled Joystick Valve for **MF2670HD & MF2680HD PLATFORM** Tractors. Tractor mounted HD Joystick control and cable operated valve with float (valve mounts to loader pedestal); Individual couplers are located on the loader pedestal; leaves tractor remotes free; remains on tractor when loader is removed; includes all hoses, couplers and hardware	85	1,327.00
	4238647M	Cable Controlled Joystick Valve for **MF2670HD & MF2680HD CAB** Tractors. Tractor mounted HD Joystick control and cable operated valve with float (valve mounts to loader pedestal); Individual couplers are located on the loader pedestal; leaves tractor remotes free; remains on tractor when loader is removed; includes all hoses, couplers and hardware	85	1,327.00
BUCKETS AND ATTACHMENTS - HOOK TYPE				**Group 04**
	7115703M	72" Std Material Bucket with Welded-on Cutting Edge	429	1,208.00
	7115701M	72" Heavy Duty Bucket with Welded-on Cutting Edge . . . . . Pre-drilled for Dirt Edge or Toothbar	652	1,411.00
	7115705M	84" Standard Material Bucket with Welded-on . . . . . Cutting Edge and Grapple Fork Mounting	652	1,517.00
	7115702M	84" Heavy Duty Material Bucket with Welded-on Cutting Edge and Grapple Fork Mounting. Pre-drilled for Dirt Edge or Toothbar	754	1,645.00
	7115709M	5 Tooth Grapple Fork for 84" Bucket with Twin Cylinders . . . **(Requires 3rd Spool Hydraulics) (Bucket Tooth Bar or Bucket Teeth are Recommended)**	660	2,188.00
	7115905M	Bucket Tooth Bar Edge for 84” Buckets	84	457.00
	7115902M	84” Reversible Bolt on Cutting Edge for 84” HD Bucket	114	204.00

SUBJECT TO AVAILABILITY

NOT FOR SALE IN QUEBEC

NON-CURRENT LOADER APPLICATION CHART

Note: For specific tractor/loader applications and loader attachment/accessories, refer to loader price pages.

Subject to Availability

TRACTOR MODEL	DL100 Loader Non-Current	L90 Loader	L100 Loader	DL120 Loader	DL130 Loader
GC1705, GC1715	X				
1526		X			
1529, 1532, 1726E, 1734E, 1739E			X		
1736, 1742				X	
1749, 1754 1759					X

Subject to Availability

TRACTOR MODEL	L210 Loader	DL250 Loader Non-Current	DL260 Loader	DL260MSL Loader	DL280 Loader (3-in Lift Non-Current)
4608		ALL MODELS			
4609, 4610			ALL MODELS	ALL MODELS	
2605, 2615	2WD ONLY	4WD ONLY			
2635	2WD ONLY	4WD ONLY			
5460, 5470, 5480					ALL MODELS
5450			2 or 4WD	2 or 4WD	

ACCESSORIES FOR NON-CURRENT LOADERS

SEE PRIOR PRICE LIST FOR INFORMATION ON THE DL100, DL250 AND DL280 LOADERS

MASSEY FERGUSON®

Order Code	Catalog Number	Description	Approx. Weight (lb.)	List Price

ACCESSORIES FOR DL100 LOADER

ACCESSORIES

4238631M	Hose Kit for Tractors with Factory Valves	4	66.00
4238632M	Joystick Hydraulic Control Valve Kit for Tractors without Factory Valves	26	763.00

To Fit onto MFGC2300 or MFGC2400 select base machine code 4238026 and hydraulic's code 4238632

ACCESSORIES FOR DL250 LOADER

MOUNTING KITS — Group 02

4238230M	Mounting Kit for MF 4608 Models Maximum Clearance 68" Outside Tire Setting		1,522.00
4238222M	Mounting Kit for 2650 HD and 2660 HD with Max Front Tire size of 11.2-24 and 573 and 583 2wd or 4wd, Cab or Platform with Grille Guard (2650HD and 2660HD Low Profile Tractors Require 4239035 Horizontal Exhaust Pipe)	499	1,568.00
4238203	Mounting Kit for all 4WD MF2605, 2615, 2625, 2635	387	1,447.00

HYDRAULICS — Group 03

4238646M	Cable Controlled Joystick Valve for **2650HD and 2660HD Platform** Tractors. Tractor mounted HD Joystick control and cable operated valve with float (valve mounts to loader pedestal). Individual couplers are located on the loader pedestal; leaves tractor remotes free; remains on tractor when loader is removed; includes all hoses, couplers and hardware	85	1,327.00
4238647M	Cable Controlled Joystick Valve for **MF2650HD and MF2660HD Cab** Tractors. Tractor mounted HD Joystick control and cable operated valve with float (valve mounts to loader pedestal). Individual couplers are located on the loader pedestal; leaves tractor remotes free; remains on tractor when loader is removed; includes all hoses, couplers and hardware	85	1,327.00
4238617M	**Pedestal Mounted Valve** for 2605, 2615, 2625 and 2635 With and without Auxiliary Hydraulics	50	1,026.00

SUBJECT TO AVAILABILITY

NOT FOR SALE IN QUEBEC

Mississippi State Contract Discount: 10%

ACCESSORIES FOR NON-CURRENT LOADERS

SEE PRIOR PRICE LIST FOR INFORMATION ON THE DL100, DL250 AND DL280 LOADERS

Order Code	Catalog Number	Description	Approx. Weight (lb.)	List Price

ACCESSORIES FOR DL250 LOADER

HYDRAULICS

	72530394M	Dealer Installed Loader Joystick and Mid Valves for use with MF4600 Series Tractors WITHOUT Factory Joystick and Mid Valves **(Order separately from Loader)**	1,313.00

HYDRAULIC HOSE KITS

	4238654M	Hose Kit - MF4600	357.00

BUCKETS AND ATTACHMENTS - PIN TYPE — Group 04

Can be used with or without Pin Type Quick Attach 7542709M

7542709M	Pin Type Quick Attach Kit - Allows Fast Interchange of Buckets and Attachments without Tools	50	282.00
4239002M	66" Standard Duty Pin Style Material Bucket	391	787.00
7541708M	Bucket Tooth Bar Edge for 66" Buckets (Buckets Must be Drilled)	71	348.00
7542700M	72" Standard Pin Type Material Bucket	355	853.00
7644700M	72" Heavy Duty Material Bucket with Welded-on Grapple Fork Mtg Plates (Drilled for Cutting Edge)	465	1,144.00
7112704M	72" Reversible Bolt on Cutting Edge for 72" HD Bucket	72	173.00
7542705M	Pallet Fork Attachment Pin Type (Not for Handling Round or Square Bales	343	1,061.00
7542707M	Bale Spear Pin Type	208	616.00
7644702M	Grapple Fork for 72" HD Pin and Skid Steer Type Buckets with Mounting Plates Installed (Requires Third Spool Hydraulics) (Tooth Bar Recommended with Grapple Fork)	344	2,117.00

SUBJECT TO AVAILABILITY

NOT FOR SALE IN QUEBEC

Mississippi State Contract Discount: 10%

ACCESSORIES FOR NON-CURRENT LOADERS

SEE PRIOR PRICE LIST FOR INFORMATION ON THE DL100, DL250 AND DL280 LOADERS

MASSEY FERGUSON®

Order Code	Catalog Number	Description	Approx. Weight (lb.)	List Price

ACCESSORIES FOR DL250 LOADER

BUCKETS AND ATTACHMENTS - SKID STEER TYPE — Group 05

Loader Must be Equipped with Skid Steer Quick Attach 7542710M

7542710M	Skid Steer Type Bucket Quick Attach Kit	110	678.00
4239026M	66" Heavy Duty Skid Steer Type Material Bucket (Recommend 66" Reversible Cutting Edge)	300	942.00
7482909M	66" Reversible Cutting Edge for 66" HD Bucket	67	171.00
7644701M	72" Heavy Duty Skid Steer Material Bucket with Welded-on Grapple Fork Plates (Drilled for Cutting Edge)	425	1,102.00
7112704M	72" Reversible Bolt on Cutting Edge for 72" HD Bucket	72	173.00
7542708M	Bale Spear Skid Steer Type	195	678.00
7541708M	Bucket Tooth Bar Edge for 66" Bucket (Bucket Must be Drilled)	71	348.00
7644702M	Grapple Fork for 72" HD Pin and Skid Steer Type Buckets with Mounting Plates Installed (Requires Third Spool Hydraulics) (Tooth Bar Recommended with Grapple Fork)	344	2,117.00

ACCESSORIES — Group 06

4239038M	Grille Guard for MF4600 Series		112.00
4239005M	Grille Guard for MF2605 and MF2615-3 Cyl / 4WD (Without Loader or with DL250 Loader)	31	224.00
4239004M	Grille Guard for MF2625 and 2635-4 Cyl 4WD (Without Loader or with DL250 Loader)	29	224.00
4239021M	Horizontal Exhaust Adapter for MF2605	7	109.00
4239035M	Horizontal Exhaust Kit for MF2600HD LP Series with Loader (Required on Low Profile Tractors with Loader)		104.00

SUBJECT TO AVAILABILITY

NOT FOR SALE IN QUEBEC

MASSEY FERGUSON®

ACCESSORIES FOR NON-CURRENT LOADERS

SEE PRIOR PRICE LIST FOR INFORMATION ON THE DL100, DL250 AND DL280 LOADERS

ACCESSORIES FOR NON-CURRENT DL280 LOADER W/3" LIFT AND BUCKET CYLINDER FOR MF5400 SERIES TRACTORS

Order Code	Catalog Number	Description	Approx. Weight (lb.)	List Price
MOUNTING KITS				**Group 02**
	4238210M	Mounting Kit with Grille Guard for MF5465 and 5475 Tier III . . With Perkins 6-Cylinder Engine (Requires 7115808M Dyna-4 Adapter Kit)	518	2,672.00
	4238227M	Mounting Kit with Grille Guard for MF5465 and 5475 Tier III . . With AGCO Power Engine (Requires 7115808M Dyna-4 Adapter Kit)	830	2,672.00
	7116805	Mounting Kit for MF5465 2wd/4wd Cab or Platform Tier II . . .	805	2,266.00
	7115808M	Adapter Kit Required for MF5400 Series (Tier II and III) . . . . (with Dyna-4 Transmission)	144	322.00
HYDRAULICS				**Group 03**
	4238635M	**Tractor Mounted Cable Controlled Joystick Valve** . . . . . **Fits: Tier II and Tier III MF5400's with Load Sensing Closed Center Valve (Cab and Platform)** (Platform will require a ROPS Bracket Kit 4238609M to Mount Valve) Tractor Mounted HD Joystick Control and Cable Operated Valve (Valve Mounted at Rear of Tractor); Zero Leak Flat Faced Faster Multi-Coupler, Located on the Loader Pedestal; Leaves Tractor Remotes Free; Remains on Tractor When Loader is removed; Includes all Hoses, Couplers and Hardware	92	2,255.00
	4238609M	**Valve Mounting Bracket** . . . . . for Use with 4290904M Allows Mounting of Valve on MF5435, 5445, 5455, and 5460 Platform Tractors	10	82.00

SUBJECT TO AVAILABILITY

NOT FOR SALE IN QUEBEC

Mississippi State Contract Discount: 10%

ACCESSORIES FOR NON-CURRENT LOADERS

SEE PRIOR PRICE LIST FOR INFORMATION ON THE DL100, DL250 AND DL280 LOADERS

MASSEY FERGUSON®

ACCESSORIES FOR NON-CURRENT DL280 LOADER W/3" LIFT AND BUCKET CYLINDER FOR MF5400 SERIES TRACTORS

BUCKETS AND ATTACHMENTS - HOOK TYPE — Group 04

Order Code	Catalog Number	Description	Approx. Weight (lb.)	List Price
	7115703M	72" Std Material Bucket with Welded-on Cutting Edge	429	1,208.00
	7115701M	72" Heavy Duty Bucket with Welded-on Cutting Edge Pre-drilled for Dirt Edge or Toothbar	652	1,411.00
	7115705M	84" Standard Material Bucket with Welded-on Cutting Edge and Grapple Fork Mounting	652	1,517.00
	7115702M	84" Heavy Duty Material Bucket with Welded-on Cutting Edge and Grapple Fork Mounting. Pre-drilled for Dirt Edge or Toothbar	754	1,645.00
	7115709M	5 Tooth Grapple Fork for 84" Bucket with Twin Cylinders **(Requires 3rd Spool Hydraulics) (Bucket Tooth Bar or Bucket Teeth are Recommended)**	660	2,188.00
	7115905M	Bucket Tooth Bar Edge for 84” Buckets	84	457.00
	7115902M	84” Reversible Bolt on Cutting Edge for 84” HD Bucket	114	204.00

ACCESSORIES — Group 05

	4239014M	Grille Guard for Tier III MF5465 and 5475	95	414.00

SUBJECT TO AVAILABILITY

NOT FOR SALE IN QUEBEC

MOWERS

MOWER APPLICATION CHART

MASSEY FERGUSON®

TRACTOR MODEL	2315 Mower (54")	2320 Mower (54")	2325 Mower (60") Subject to Availability	2326 Mower (60")	1505 Mower (60")	1505 Mower (72")	1705 Mower (72")
GC1705 GC1715	X	X	X	X			
GC2400 GC2600	X	X	X	X			
GC1710 TLB GC1720 TLB	X	X	X	X			
GC2410 TLB GC2610 TLB	X	X	X	X			
1533, 1540						X	
1528, 1531					X	X	
1529, 1532					X	X	
1523, 1526					X		
1635						X	
1736							4WD Platform Only

Mississippi State Contract Discount: 10%

MF 2300 SERIES MOWER

MASSEY FERGUSON®

(F.O.B. Port of Entry)

FEATURES

- Mid-Mounted Stamped Tunnel Deck
- Right Hand Discharge (only on MF2320, 2325 and 2326)
- Cutting Width:
  MF2315: 54 inch
  MF2320: 54 inch
  MF2325: 60 inch
  MF2326: 60 inch
- Six (6) Overlapping Offset Blades on MF2315
  Three (3) Overlapping Offset Blades on MF2320, MF2325 and MF2326
- Cutting Height:
  MF2315: 1.3 - 4.9 inches
  MF2320: 1.2 - 4.7 inches
  MF2325: 1.2 - 4.7 inches
  MF2326: 1.2 - 4.7 inches
- Lift: Parallel Linkage, Hydraulic
- Transport Height: 5.9 inches
- Compatible with DL100 Loader
- Compatible with MF 2375 Backhoe on GC2410, GC2610 TLB and GC1710 and GC1720 3-Point Linkage must be Removed
- Mid PTO Driveshaft to Mower Gear Box
- Blade Tip Speed:
  MF2315: 16,200 FPM
  MF2320: 17,200 FPM
  MF2325: 17,600 FPM
  MF2326: 17,600 FPM
- Two (2) Front Hard Rubber Gauge Wheels with Bearings, Castering Regreasable
- Two (2) Rear Hard Rubber Gauge Wheels with Bearings, Regreasable
- One (1) Front Roller and Two (2) Rear Rollers

Order Code	Catalog Number	Description	Approx. Weight (lb.)	List Price
MF2300 Series		**MF2300 Series Base Mower**		
MF2315-SSM54	7492001	MF2315 54-inch Mower Deck (Mulching) - Non-Drive Over. For GC2400, GC2410 TLB, GC2600 and GC2610 TLB and all GC1700 Series		2,386.00
MF2320-SSM54	7491001	MF2320 54-inch Mower Deck - Non-Drive Over. . . . . For GC2400, GC2410 TLB, GC2600 and GC2610 TLB and all GC1700 Series		2,160.00
MF2325-SSM60	7479001	MF2325 60-inch Mower Deck - Non-Drive Over. . . . . For GC2400, GC2410 TLB, GC2600 and GC2610 TL and all GC1700 Series	275	2,219.00
MF2326-SSM60	72530409	MF2326 60-inch Mower Deck - Drive Over . . . . . For GC2400, GC2410 TLB, GC2600 and GC2610 TL and all GC1700 Series	275	2,397.00

SUBJECT TO AVAILABILITY

MASSEY FERGUSON®

RESERVED

Mississippi State Contract Discount: 10%

MF 1505 MID-MOUNT MOWER

MASSEY FERGUSON®

(F.O.B. Port of Entry)

FEATURES

- Mid-Mount Stamped Tunnel Deck
- 60" or 72" Cutting Width
- Three (3) Overlapping Offset Blades
- Cutting Height: 2 To 4 Inches
- Lift:
  Parallel Lift Connected to Left Hand 3-Point Lift Arm
  Lift Height Approximately 6"
  Lift Lockup Allows Use of 3pt with Mower Raised
- Right Hand Hinged Discharge Chute
- Quick Disconnect with Single Handle Front Latch and Two Spring Loaded Pins at Rear
- Compatible with MF1525 Loader
- Compatible with MF1520 Loader
- Compatible with MF1515 Loader
- Compatible with MFL100 Loader
- Compatible with MF L90 Loader
- Compatible with MFL80 Loader
- Compatible with MFDL120 Loader
- Mower Fits 1523, 1526, 1528, 1529, 1531, 1532, 1533, 1540 and 1635
  (See below for limitations)
- Mid PTO Shaft Drive To Mower Gearbox
- One Center Mounted Front Anti-Scalp Roller
- Two Adjustable Non-Caster Rear Outboard Anti-Scalp Wheels
- Two Adjustable, Castering Front Gauge Wheels with Greaseable Bearings
- Two Adjustable Non Castering Rear Inner Gauge Wheels with Greaseable Bearings
- **Note! When ordering for installation on model 1635 additional mid PTO linkage parts are required. See below for required part numbers**
- **Note! If Tractor is equipped with backhoe it must be removed in order to operate mid mount mower**

Order Code	Catalog Number	Description	Approx. Weight (lb.)	List Price
MF1505		**MF1505 BASE MID MOUNT MOWER**		
SSM60 RMF1523HE3	4277107	60" Mower Deck for MF1523 Hydro	385	2,872.00
SSM60 RMF1523ME3	4277106	60" Mower Deck for MF1523 Gear (Includes Mid PTO Kit)	385	3,091.00
SSM60 RMF1526ME3	72530243	60" Mower Deck for MF1526 Hydro Includes Mid PTO Kit)		2,760.00
SSM60 RMF1432E3	4277109	60" Mower Deck for MF1528 Hydro, 1528 Gear and 1531 Hydro (1528 Gear Requires mid PTO kit# 72530360M)		2,690.00
SSM60 R1532ME3	4277116	60" Mower Deck for 1529, 1529 Hydro, 1532, 1532 Hydro Includes Mid PTO Kit (Excludes 9X3 Transmission)		3,355.00
SSMA72 RMF1432E3	4277111	72" Mower Deck for MF1528 Hydro, MF1528 Gear and MF1531 Hydro (1528 Gear Requires Mid PTO Kit #72530360M)		3,381.00
SSMA72 R1532ME3	4277117	72" Mower Deck for MF1529, 1529 Hydro, 1532, 1532 Hydro Includes Mid PTO Kit (Excludes 9X3 Transmission)		3,801.00
SSM72 RMF1540ME3	4277110	72" Mower Deck for MF1533, 1540, 1635 Includes Mid PTO Kit (Compatible only with Std Turf Tires-41x14.00-20 Rear and Small R4 Tires-15x19.5 Rear) **NOTE! For installation on model 1635 the following part numbers are required; 6255192M91, 6255196M91, 6255194M92, 3704673M1 and 6254184M1**	492	3,653.00
		MID PTO KIT		
	72530360M	Mid PTO Kit (Required for Mower Installation on MF1528 Gear) (Includes Mid PTO Gear and Lever Kit)		914.00
		FRENCH OPERATOR'S MANUAL AND DECALS		
	72530157	French Operator's Manual and Decals		No Charge

MASSEY FERGUSON®

RESERVED

Mississippi State Contract Discount: 10%

MF 1705 MID-MOUNT MOWER

MASSEY FERGUSON®

(F.O.B. Port of Entry)

FEATURES

- Mid-Mount Stamped Tunnel Deck
- 72” Cutting Width
- Three (3) Overlapping Offset Blades
- Cutting Height: 2 To 4 Inches
- Lift:
  Parallel Lift Connected to Left Hand 3-Point Lift Arm
  Lift Height Approximately 6”
  Lift Lockup Allows Use of 3-Point with Mower Raised
- Right Hand Hinged Discharge Chute
- Quick Disconnect with Single Handle Front Latch and Two Spring Loaded Pins at Rear
- **Not Compatible with MFDL120 Loader - is Compatible with MFDL125 Loader**
- Mower Fits 1736 4wd Platform Only
- Mid PTO Shaft Drive To Mower Gearbox
- One Center Mounted Front Anti-Scalp Roller
- Two Adjustable Non-Caster Rear Outboard Anti-Scalp Wheels
- Two Adjustable, Castering Front Gauge Wheels with Greaseable Bearings
- Two Adjustable Non Castering Rear Inner Gauge Wheels with Greaseable Bearings
- **Note: If Tractor is equipped with backhoe it must be removed in order to operate mid mount mower**

Order Code	Catalog Number	Description	Approx. Weight (lb.)	List Price
MF1705		**MF1705 BASE MID MOUNT MOWER**		
SSM72 RMF1736ME3	72530399	72" Mower Deck for MF1736 4WD Platform . . . . . (Includes Mid PTO Kit)	492	3,833.00

MASSEY FERGUSON®

RESERVED

BACKHOES

BACKHOE APPLICATION CHART

MASSEY FERGUSON®

Subject to Availability

TRACTOR MODEL	CB10 BACKHOE Subject to Availability	CB20 BACKHOE Subject to Availability
1529, 1532	Equipped with 1520 or L100 Loader	
1635, 1643, 1736 Gear only, 1742 Gear only		Equipped with DL120 Loader
1648, 1652, 1655, 1660, 1749 Gear Only, 1754 Gear Only, 1759		Equipped with DL130 Loader
533, 543, 563, 573, 583, 2605, 2615, 2625, 2635 2650HD, 2660HD		Equipped with L210, DL250, DL270 or 1530 Loader and Draft Lock-out with 3-Point Mount

Mississippi State Contract Discount: 10%

CB10 BACKHOE

MASSEY FERGUSON®

(F.O.B. SIOUX CITY, IOWA)

FEATURES

- Curved Boom
- Quick-Attach Subframe Mount
- 180 Degree Boom Swing with Rubber Cushion Stops
- Two-Lever Four Way Dig Control
- Twin Cylinder Boom Swing with hydraulic cushion
- Two Bar Bucket Linkage
- Independently, Hydraulically Controlled Stabilizers
- Adjustable Operator's Seat (High Back)
- Safety Boom Lock For Transport
- Boom Float Control
- 90" Maximum Digging Depth
- For MF1529, 1532 Tractors

NOTE:

- *Tractor must be equipped with a front-end loader and backhoe sub-frame for safe and satisfactory backhoe operation.*
- *Not intended for industrial use.*
- *Specifications will vary according to tractor and tire sizes used.*
- *Backhoe must be removed to operate mid mount mower.*
- *Not for 3-Point Hitch use on compact tractor.*
- *Backhoe Mounts are not Compatible with Top and Tilt Kits.*

SUBJECT TO AVAILABILITY

Order Code	Catalog Number	Description	Approx. Weight (lb.)	List Price
For a Complete Backhoe, Select One Order Code from Group 01 and One Catalog Number from Group 02, 03 & 04				
BASE MACHINE				**Group 01**
CB10	4238076	Backhoe with Control Valve.	929	6,337.00
SUBFRAME MOUNTING KITS				**Group 02**
	4238204M	Mounting Kit for CB10 on MF1529 and 1532 . . . . . Gear, Synchro Shuttle or Hydrostatic, with L100 Loader	351	971.00
HYDRAULICS				**Group 03**
	4238611M	Power Beyond Kit to Connect CB10 to MF1529/1532 . . . . . with Factory Joystick or Pedestal Mounted Joystick	9	266.00
BACKHOE BUCKETS AND ACCESSORIES				**Group 04**
	7484501M	10-inch Bucket with 3 Teeth	53	349.00
	7484502M	12-inch Bucket with 3 Teeth	67	400.00
	7484503M	16-inch Bucket with 4 Teeth.	79	449.00
	7518401M	Rubber Street Pads	10	130.00
	4239034M	Thumb Kit for CB10, CB15, CB20, 1570, 1575 and 1580 . . .		440.00

MASSEY FERGUSON®

RESERVED

Mississippi State Contract Discount: 10%

CB20 BACKHOE

MASSEY FERGUSON®

(F.O.B. SIOUX CITY, IOWA)

FEATURES

- New Curved Boom
- Quick-Attach Subframe Mount
- 180 Degree Boom Swing with Rubber Cushion Stops
- Two-Lever Four Way Dig Control
- Twin Cylinder Boom Swing with hydraulic cushion
- Two Bar Bucket Linkage
- Independently, Hydraulically Controlled Stabilizers
- Adjustable Operator's Seat (High Back)
- Safety Boom Lock For Transport
- Quick-Attach Subframe Mount for MF1533, 1540, 1547, 1552, 1560,1635, 1643, 1648, 1652, 1655, 1660, 1736 Gear, 1742 Gear, 1749 Gear, 1754 Gear, & 1759 For Tractor Equipped with MF1525,1530 DL120 and DL130 Front Loaders
- Cat. I 3-Point Hitch Mount for MF573, 583, 2650 HD, 2660 HD Tractors (3-Point Hitch is **Not** for Compact Tractors)
  * Must Order 3-Point Draft Lock-out Kit
- 100" Maximum Digging Depth

NOTE:

- ***When installing CB20 Backhoe on MF1700 Cab Tractor, the operator may experience limited head room due to cab roof design.***
- *Tractor must be equipped with a front-end loader for safe and satisfactory backhoe operation.*
- *Compact tractors must be equipped with backhoe sub-frame.* ***Not*** *for 3-Point Hitch use on Compact tractors.*
- *Not intended for industrial use.*
- *Specifications will vary according to tractor and tire sizes used.*
- *Backhoe must be removed to operate mid mount mower.*
- *Backhoe Mounts are not Compatible with Top and Tilt Kits.*

SUBJECT TO AVAILABILITY

Order Code	Catalog Number	Description	Approx. Weight (lb.)	List Price
For a Complete Backhoe, Select One Order Code from Group 01 and One Catalog Number from Group 02, 03 & 04				
BASE MACHINE				**Group 01**
CB20	4238021	Backhoe with Control Valve.	1183	6,914.00
SUBFRAME MOUNTING KITS				**Group 02**
	4238237M	Mounting Kit for CB20 on MF1736 and 1742 Gear, ... with DL120 Loader		1,300.00
	4238238M	Mounting Kit for CB20 on MF1749 and 1754 Gear, ... with DL130 Loader		1,400.00
	4238239M	Mounting Kit for CB20 on MF1759, ... with DL130 Loader		1,400.00
	4238229M	Mounting Kit for MF1560, 1660.		1,266.00
	4238220M	Mounting Kit for MF1533, 1540, 1635 and 1643	344	1,178.00
	4238221M	Mounting Kit for MF1547, 1552, 1648, 1652 and 1655.	367	1,266.00
	7485707M	Draft Lockout Kit for Tractors without Sensing Beam . . . . . MF2605 and 2615 (Use with #7485703M)	8	151.00
	7485709M	Draft Lockout Kit for Tractors with Sensing Beam . . . . . MF2625, 2635, 533, 573, and 583 (Use with #7485703)	8	119.00

NOT FOR SALE IN QUEBEC

CB20 BACKHOE

MASSEY FERGUSON®

Order Code	Catalog Number	Description	Approx. Weight (lb.)	List Price
HYDRAULICS				**Group 03**
	4238662M	Power Beyond Kit to Connect CB20 to MF1700 Premium Series Tractors (except 1758) Gear or Hydrostatic, with DL120 or DL130 Loader	13	380.00
	4238641M	Power Beyond Kit to Connect CB20 to MF1533, 1540, 1547, 1552 and All 1600 Series Tractors Note: 1600 Series Cab Tractors without 2nd Remote Valve Require 6241693M2 Coupler Mounting Bar	13	380.00
BACKHOE BUCKETS AND ACCESSORIES				**Group 04**
	7484501M	10-inch Bucket with 3 Teeth	53	349.00
	7484502M	12-inch Bucket with 3 Teeth	67	400.00
	7484503M	16-inch Bucket with 4 Teeth	79	449.00
	4239015M	12-inch Heavy Duty Bucket with 3 Replaceable Teeth	88	561.00
	4239016M	16-inch Heavy Duty Bucket with 4 Replaceable Teeth	103	587.00
	4239017M	24-inch Heavy Duty Bucket with 5 Replaceable Teeth	131	670.00
	7518401M	Rubber Street Pads	10	130.00
	4239034M	Thumb Kit for CB10, CB15, CB20, 1570, 1575 and 1580		440.00

SUBJECT TO AVAILABILITY

NOT FOR SALE IN QUEBEC

FRONT MOUNTED

FRONT MOUNTED APPLICATION CHART

MASSEY FERGUSON®

TRACTOR MODEL	2335 2340	1405	1545 1550	2360	1507	1410	2330	1535	1415
	BLADE	FRONT DOZER BLADE		SNOW BLOWER			ROTARY BROOM		
GC1705 GC1715	X			X			X		
GC2400 GC2600	X			X			X		
GC1710 GC1720	X			X			X		
GC2410 TLB GC2610 TLB	X			X			X		
1526, 1528, 1529H, 1531, 1532H 1533, 1540		X				X			X
1547, 1552			X		X			X	
1635, 1736		X				X			X
1643,1648, 1652, 1742, 1749, 1754, 1758			X		X			X	

Mississippi State Contract Discount: 10%

MF 2335 & 2340 BLADE

MASSEY FERGUSON®

(F.O.B. Port of Entry)

FEATURES

- **MF 2335 Blade (54"):**
- **Fits all GC Series Tractors**
- Quick Hitch System
- Overall width 54", overall height 17.5"
- Length with female hitch 16"
- Blade thickness 11 Ga with security spring
- Reinforcement braces thickness 3/8"
- Reversible cutting edge but not adjustable
- Cutting edge thickness: 3/8"
- Manual angling 0-15-30
- Hydraulic angling not available
- Adjustable skid shoes
- Hydraulic Lift Mechanism Standard

- **MF 2340 Blade (60"):**
- **Fits all GC Series Tractors**
- Quick Hitch System
- Overall width 60", overall height 19"
- Length with female hitch 23"
- Blade thickness 3/16" with security spring
- Reinforcement braces thickness 1/4"
- Reversible cutting edge but not adjustable
- Cutting edge thickness: 1/2"
- Manual angling 0-15-30
- Adjustable skid shoes
- Optional Hydraulic angling (0 to 30 degrees)
- Hydraulic Lift Mechanism Standard

Order Code	Catalog Number	Description	Approx. Weight (lb.)	List Price
		For a Complete Blade, Select One Order Code from Group 01 and Catalog Number(s) from Group 02		
BASE MACHINE				**Group 01**
MF2335	8301003	MF2335 54" Std Duty Front Blade **(Requires 8300101M)** . . .	126	560.00
MF2340	8302003	MF2340 60" Heavy Duty Front Blade **(Requires 8300101M)** .	303	978.00
HYDRAULICS				**Group 02**
	8302203M	Hydraulic Angle Kit for HD 60" (MF2340) Blade	16	454.00
		See Compact Tractor Section for Hydraulic Valves		
		Note: Tractor must be equipped with hydraulic valve		
ACCESSORIES:				
	8300102M	Front Quick Hitch for GC1700 Series Tractors, ... Includes Male Hitch, Cylinder Hoses and Couplers	81	733.00
	8300101M	Front Quick Hitch for GC2400 and GC2600 Series Tractors, . Includes Male Hitch, Cylinder Hoses and Couplers	81	733.00
	8302202	Rubber Cutting Edge for HD 60" Blade.	50	252.00
	8301901	French Operator Manual for 54" Blade		No Charge
	8302901	French Operator Manual for 60" Blade		No Charge

Mississippi State Contract Discount: 10%

1405 FRONT DOZER BLADE

MASSEY FERGUSON®

(F.O.B. Port of Entry)

FEATURES

- Patented Quick Hitch, Cat B
- Overall Width 66”
- Overall Height 22.5”
- Moldboard Height 21.75”
- Moldboard Thickness .25”
- Cutting Edge: High Carbon Steel, Heat Treated, Double Bevel
- Lifting Mechanism: Hydraulic
- Angling: Mechanical
- Optional Hydraulic Blade Angling
- Front Mount To Fit: MF1526, 1528, 1529, 1531, 1532, 1533, 1540, 1635 and 1736
- **NOTE:**
  To Operate MF1405 Dozer Blade with Manual Angling, Tractor Must have Minimum of One Spool Valve or Auxiliary Joystick.

  To Operate MF1405 Dozer Blade with Hydraulic Angling, Tractor must be Equipped with Two Spool Valve or Auxiliary Valve.
- **To Connect and Operate Loader, Subframe Must be Removed**

Order Code	Catalog Number	Description	Approx. Weight (lb.)	List Price
For a Complete Dozer Blade, Select One Order Code from Group 01 and Catalog Number(s) from Group 02				
BASE MACHINE				**Group 01**
MF1405	4251003	MF1405 Front Dozer Blade . . . . . With Manual Angling, HD Double Bevel Heat-treated Cutting Edge, HD Skid Shoes, Female Hitch, Trip Springs (**Requires Subframe)**	390	1,146.00
SUBFRAME				**Group 02**
	72530364M	Subframe for MF1736		1,927.00
	7092102M	Subframe for MF1528H and 1531H	427	1,814.00
	72530245M	Subframe Quick Hitch for MF1526	351	1,252.00
	7092103M	Subframe Front Quick Hitch . . . . . For all MF1529, 1532, 1533, 1540, and 1635 Tractors **(Subject to Availability)**		1,889.00
ACCESSORIES:				
	4251201M	Hydraulic Angling Kit includes: 1 cylinder, Hoses and . . . . . Male Quick Couplers	25	550.00
	4251901	French Manual and Decals		No Charge
	7092903M	French Manual (Subframe)		No Charge

*** See Compact Tractor Section for Hydraulic Valves**

Mississippi State Contract Discount: 10%

MF1545 FRONT DOZER BLADE

MASSEY FERGUSON®

(F.O.B. Port of Entry)

FEATURES

- Patented Quick Hitch, Cat C
- Overall Width 72”
- Overall Height 22 3/8”
- Moldboard Thickness 1/4”
- Cutting Edge: High Carbon Steel, Heat Treated, Double Bevel
- Lifting Mechanism: Hydraulic
- Angling: Hydraulic
- Front Mount To Fit: 1547, 1552, 1643, 1648, 1652, 1742, 1749, 1754, and 1758
- **NOTE:**

  To Operate MF1545 Dozer Blade Tractor Must be Equipped with Two Spool Valve or Auxiliary Valve.

Order Code	Catalog Number	Description	Approx. Weight (lb.)	List Price
For a Complete Dozer Blade, Select One Order Code from Group 01 and Catalog Number(s) from Group 02				
BASE MACHINE				**Group 01**
MF1545	7582001	MF1545 Front Dozer Blade with Hydraulic Angling. . . . . **(Requires a Subframe below)**	540	2,171.00
SUBFRAME				**Group 02**
	72530368M	Subframe for MF1742, 1749, 1754, and 1758		2,415.00
	7581101M	Subframe for MF1547, 1552, 1643, 1648, and 1652	427	2,070.00
ACCESSORIES:				
	7582901	French Manual		No Charge
	7092904M	French Manual (Subframe).		No Charge

*** See Compact Tractor Section for Hydraulic Valves**

Mississippi State Contract Discount: 10%

MF 1550 FRONT DOZER BLADE

MASSEY FERGUSON®

(F.O.B. Port of Entry)

FEATURES

- Patented Quick Hitch, Cat C
- Overall Width 84”
- Overall Height 22 3/8”
- Moldboard Thickness 1/4”
- Cutting Edge: High Carbon Steel, Heat Treated, Double Bevel
- Lifting Mechanism: Hydraulic
- Angling: Hydraulic
- Front Mount To Fit: 1547, 1552, 1643, 1648, 1652, 1742, 1749, 1754, and 1758
- **NOTE:**

  To Operate MF1550 Dozer Blade Tractor Must be Equipped with Two Spool Valve or Auxiliary Valve.

Order Code	Catalog Number	Description	Approx. Weight (lb.)	List Price
For a Complete Dozer Blade, Select One Order Code from Group 01 and Catalog Number(s) from Group 02				
BASE MACHINE				**Group 01**
MF1550	7583001	MF1550 Front Dozer Blade with Hydraulic Angling. . . . . (**Requires a subframe below**)	570	2,577.00
SUBFRAME				**Group 02**
	72530368M	Subframe for MF1742, 1749, 1754, and 1758		2,415.00
	7581101M	Subframe for MF1547, 1552, 1643, 1648, and 1652	427	2,070.00
ACCESSORIES:				
	7583901	French Manual		No Charge
	7092904M	French Manual (Subframe).		No Charge

*** See Compact Tractor Section for Hydraulic Valves**

Mississippi State Contract Discount: 10%

MF 2360 SNOW BLOWER

MASSEY FERGUSON®

(F.O.B. Port of Entry)

FEATURES

- Fits all GC Series Tractors
- Patented Quick Hitch System
- Overall width 50 3/16" ; Overall height w/o chute 20.5"
- Overall length with female hitch 30.5" (approx.)
- Cutting width 50"/ Cutting height 19 1/8"
- Clockwise rotation
- Auger drive: worm gear box ratio 5:1. Auger Diameter 12 7/8"
- Impeller drive: No.40 chain. Impeller Diameter 15 5/8"
- 2 Shear bolts on auger / 1 shear bolt and 3 blades on impeller
- Adjustable deflector and rear skid shoes
- Two Stage
- Chute position: left / Chute rotation: manual
- Frame thickness: 14 Ga / Side thickness: 11 Ga
- PTO Drive
- Lifting Mechanism - Hydraulic

Order Code	Catalog Number	Description	Approx. Weight (lb.)	List Price
For a Complete Snow Blower, Select One Order Code from Group 01 and Catalog Number(s) from Group 02 and 03				
BASE MACHINE				**Group 01**
MF2360	8300004	MF2360 50" Snow Blower . . . . . Includes Female Hitch, Half Driveline, Chute, Manual Rotation and Reduction **(Requires catalog # 8300101M and 8300201M)** Note: Tractors with Soft Side Cab are not Compatible with Manual Rotation; Catalog # 8300202M Must be Ordered	288	2,236.00
HYDRAULICS				**Group 02**
		See Compact Tractor Section for Hydraulic Valves *Note: Tractor must be equipped with hydraulic valve*		
MID PTO DRIVELINE				**Group 03**
	8300201M	Mid PTO Drive kit. Includes Mid PTO Driveline . . . . . and Half Driveline for Implements and Hardware	19	593.00
ACCESSORIES:				
	8300102M	Front Quick Hitch for GC1700 Series Tractors, ... Includes Male Hitch, Cylinder Hoses and Couplers	81	733.00
	8300101M	Front Quick Hitch for GC2400 and GC2600 Series Tractors, . Includes Male Hitch, Cylinder Hoses and Couplers	81	733.00
	8300202M	Electric Chute Rotation Kit	8	412.00
	8300203M	Electric Chute Deflector Kit.	8	553.00
	8300901	French Manual		No Charge

Mississippi State Contract Discount: 10%

MF 1410 SNOW BLOWER

MASSEY FERGUSON®

(F.O.B. Port of Entry)

FEATURES

- Patented Quick Hitch, Cat B
- Overall width 63”
- Overall height 53.125”
- Overall height without chute 23.8”
- Drive system: 1885 - 2000 RPM Gearbox in oil
- Driveline Protection: Shear bolt
- 14” diameter auger
- 4 blade blower fan
- Hydraulic lifting mechanism
- Hydraulic Main chute left / right
- Front Mount To Fit: MF1526, 1528, 1529, 1531, 1532, 1533, 1540, 1635 and 1736
- **NOTE:**
  To Operate MF 1410 Snow Blower, Tractor Must Be Equipped with Two Spool Valve or Auxiliary Joystick Valve.

  To Mount MF1410 to Tractor, the Subframe Mounting Kit and Mid PTO Driveline Must Be Ordered. Tractor Must be Equipped with Mid PTO
- **To Connect and Operate Loader, Subframe Must be Removed**

Order Code	Catalog Number	Description	Approx. Weight (lb.)	List Price
For a Complete Snow Blower, Select One Order Code from Group 01 and Order Codes from Group 02 and 03 as Required				
BASE MACHINE				**Group 01**
MF1410	72530257	MF1410 63" Snow Blower . . . . . Complete with Oilbath Gear Boxes, 4 Blade Fan, Skid Shoes, Half Driveline, Female Hitch, 2-Part Chute with High Torque Hydraulic Motor, Hoses, and Couplers, Operator Manual. (**Requires Subframe and Mid PTO Driveline)**	547	3,788.00
SUBFRAME				**Group 02**
	72530364M	Subframe for MF1736		1,927.00
	7092102M	Subframe for MF1528H and 1531H	427	1,814.00
	72530245M	Subframe Quick Hitch for MF1526	351	1,252.00
	7092103M	Subframe Front Quick Hitch . . . . . For all MF1529, 1532, 1533, 1540, and 1635 Tractors **(Subject to Availability)**		1,889.00
MID PTO DRIVELINE				**Group 03**
	7092207M	Mid PTO Driveline for MF1529, 1532, 1533, 1540, ... 1635 and 1736 Tractors (No Mid PTO available on MF1532 with 9 x 3 Transmission)	37	773.00
	72530246M	Mid PTO Driveline for MF1526	21	728.00
ACCESSORIES:				
	72530259M	3 Part Chute for Blower.	40	332.00
	72530260M	Hydraulic Chute Deflector . . . . . (**Requires 3 Spool Tractor Mount Valve)**	14	318.00
	72530261M	Electric Chute Deflector	8	533.00
	7092901	French Manual		No Charge
	7092903M	French Manual (Subframe).		No Charge

*** See Compact Tractor Section for Hydraulic Valves and Mid PTO kits**

Mississippi State Contract Discount: 10%

MF 1507 SNOW BLOWER

MASSEY FERGUSON®

(F.O.B. Port of Entry)

FEATURES

- Patented Quick Hitch, Cat BC
- Overall width 74”
- Overall height 27-1/2”
- Driveline Protection: Shear bolt
- 14-3/4” Diameter Auger
- 4 Blade blower fan
- Lifting mechanism: Hydraulic
- Hydraulic Main chute left / right
- Replacement cutting edge and ski shoes
- 2 Part Chute Standard
- Front Mount To Fit: MF1643, 1648, 1652, 1742, 1749, 1754, and 1758
- **NOTE:**
  To Operate MF 1507 Snow Blower, Tractor Must Be Equipped with Two Spool Valve or Auxiliary Joystick Valve. Tractor must be equipped with Mid PTO.

Order Code	Catalog Number	Description	Approx. Weight (lb.)	List Price
For a Complete Snow Blower, Select One Order Code from Group 01 and Order Codes from Group 02 and 03 as Required				
BASE MACHINE				**Group 01**
MF1507	72530258	MF1507 74" Snow Blower . . . . . (**Requires Subframe and Mid PTO Driveline)**	586	5,043.00
SUBFRAME				**Group 02**
	72530368M	Subframe for MF1742, 1749, 1754, and 1758		2,415.00
	7581101M	Subframe for MF1643, 1648, and 1652	427	2,070.00
MID PTO DRIVELINE				**Group 03**
	7581102M	Mid PTO Driveline for MF1643, 1648, 1652, ... 1742, 1749, 1754, and 1758	37	777.00
ACCESSORIES:				
	72530259M	3 Part Chute For Blower	40	332.00
	72530260M	Hydraulic Chute Deflector . . . . . (**Requires 3 Spool Tractor Mount Valve)**	14	318.00
	72530261M	Electric Chute Deflector	8	533.00
	7581901	French Manual		No Charge
	7092904M	French Manual (Subframe).		No Charge

*** See Compact Tractor Section for Hydraulic Valves**

Mississippi State Contract Discount: 10%

MF 2330 ROTARY BROOM

MASSEY FERGUSON®

(F.O.B. Port of Entry)

FEATURES

- Fits all GC Series Tractors
- Patented Quick Hitch System
- Overall width: 47-3/8"
- Height without broom: 11-3/8". Height with broom: 18-3/8"
- Length with female hitch: 42" (approx.)
- Broom Diameter: 18". Broom Length: 43.25"
- Manual angling, 0-12, 5-25 degrees
- Working width at maximum angle (39-3/16")
- PTO Drive
- Reduction ratio 2.78:1
- Broom Drive - No. 40 chain
- Frame thickness: 14 Ga
- Lift Mechanism - Hydraulic

Order Code	Catalog Number	Description	Approx. Weight (lb.)	List Price
For a Complete Rotary Broom, Select One Order Code from Group 01 and Catalog Number(s) from Group 02 and 03				
BASE MACHINE				**Group 01**
MF2330	8303003	MF2330 47" Rotary Broom . . . . . Includes Female Hitch, Half Driveline, Manual Angling, Polypropylene Brush and Parking Stands. **(Requires catalog # 8300101M and 8300201M)**	310	2,658.00
HYDRAULICS				**Group 02**
		See Compact Tractor Section for Hydraulic Valves *Note: Tractor must be equipped with hydraulic valve*		
MID PTO DRIVELINE				**Group 03**
	8300201M	Mid PTO Drive Kit. Includes Mid PTO . . . . . Driveline and Half Driveline for Implements and Hardware	19	593.00
ACCESSORIES:				
	8300102M	Front Quick Hitch for GC1700 Series Tractors, ... Includes Male Hitch, Cylinder Hoses and Couplers	81	733.00
	8300101M	Front Quick Hitch for GC2400 and GC2600 Series Tractors, . Includes Male Hitch, Cylinder Hoses and Couplers	81	733.00
	8303202	Detaching Wheel Kit . . . . . (For use on S/N: RP252001 and up)	30	305.00
	8303901	French Operator Manual		No Charge

Mississippi State Contract Discount: 10%

MF 1415 ROTARY BROOM

MASSEY FERGUSON®

(F.O.B. Port of Entry)

FEATURES

- Patented Quick Hitch, Cat B
- Overall Width 61”
- Overall Height 23.5”
- Rotation 194 - 206 RPM
- Brush Diameter 22”
- Sweeping Width - Straight 54.5”
- Sweeping Width - @ 25 Degrees 49”
- Drive System Gearbox in oil
- Lifting Mechanism: Hydraulic
- Angling: Mechanical
- Optional Hydraulic Angling
- Frame Thickness 14 Gauge
- Polypropylene Brush
- Front Mount To Fit: MF1526, 1528, 1529, 1531, 1532, 1533, 1540, 1635 and 1736
- **NOTE:**
  To Operate MF 1415 Rotary Broom Tractor Must Be Equipped with Two Spool Valve or Auxiliary Joystick Valve.

  To Mount MF1415 to Tractor, the Sub Frame Mounting Kit and Mid PTO Driveline Must Be Ordered.
- **Tractor Must be Equipped with Mid PTO**
- **To Connect and Operate Loader, Sub Frame Must be Removed**

SUBJECT TO AVAILABILITY

Order Code	Catalog Number	Description	Approx. Weight (lb.)	List Price
For a Complete Rotary Broom, Select One Order Code from Group 01 and Catalog Number(s) from Group 02 and 03				
BASE MACHINE				**Group 01**
MF1415	4252003	MF1415 61" Rotary Broom . . . . . Hydraulic Lift, Manual Angle, Female Hitch, 1/2" Driveline. (**Requires Subframe and PTO Driveline**)	494	3,365.00
SUBFRAME				**Group 02**
	72530364M	Subframe for MF1736		1,927.00
	7092102M	Subframe for MF1528H and 1531H	427	1,814.00
	72530245M	Subframe Quick Hitch for MF1526	351	1,252.00
	7092103M	Subframe Front Quick Hitch . . . . . For all MF1529, 1532, 1533, 1540, and 1635 Tractors **(Subject to Availability)**		1,889.00
MID PTO DRIVELINE				**Group 03**
	7092207M	Mid PTO Driveline for MF1529, 1532, 1533, 1540, ... 1635 and 1736 Tractors (No Mid PTO available on MF1532 with 9 x 3 Transmission)	37	773.00
	72530246M	Mid PTO Driveline for MF1526	21	728.00
ACCESSORIES:				
	4252201M	Hydraulic Angling Kit	11	512.00
	4252102M	6” X 2” Side Caster Wheel	48	432.00
	4252101M	50/50 Wire / Poly Broom	126	633.00
	4252901	French Manual		No Charge
	7092903M	French Manual (Subframe).		No Charge

***See Compact Tractor section for Hydraulic Valves and MID PTO kits.**

Mississippi State Contract Discount: 10%

MF 1535 ROTARY BROOM

MASSEY FERGUSON®

(F.O.B. Port of Entry)

FEATURES

- Patented Quick Hitch, Cat C
- Overall Width 72”
- Overall Height 31”
- Rotation Counterclockwise
- Brush Diameter 22”

- Sweeping Width - 66-1/2”
- Drive System Gearbox in oil
- Polypropylene Brush
- 1 Front Mounted, 12x3 support wheel
- Lifting Mechanism: Hydraulic
- Hydraulic Angling

- Front Mount To Fit: MF1547, 1552, 1643, 1648, 1652, 1742, 1749, 1754, and 1758

- **NOTE:**
  To Operate MF 1535 Rotary Broom, Tractor Must Be Equipped with Two Spool Valve or Auxiliary Valve.

  To Mount to the tractor, the Mid PTO Driveline must be ordered and tractor must be equipped with MID PTO.

Order Code	Catalog Number	Description	Approx. Weight (lb.)	List Price
For a Complete Rotary Broom, Select One Order Code from Group 01 and Catalog Number(s) Group 02 and 03				
BASE MACHINE				**Group 01**
MF1535	7584002	MF1535 72" Rotary Broom . . . . . (**Requires Subframe and PTO Driveline)**	537	4,116.00
SUBFRAME				**Group 02**
	72530368M	Subframe for MF1742, 1749, 1754, and 1758		2,415.00
	7581101M	Subframe for MF1547, 1552, 1643, 1648, and 1652	427	2,070.00
MID PTO DRIVELINE				**Group 03**
	7581102M	Mid PTO Driveline for MF1547, 1552, 1643, 1648,. . . . . 1652, 1742, 1749, 1754, and 1758	37	777.00
ACCESSORIES:				
	4252102M	6” X 2” Side Caster Wheel	48	432.00
	7584902M	50/50 Wire / Poly Broom	65	633.00
	7584901	French Manual		No Charge
	7092904M	French Manual (Subframe).		No Charge

*** See Compact Tractor Section for Hydraulic Valves**

MASSEY FERGUSON®

HARVEST

MASSEY FERGUSON TABLE OF CONTENTS

COMBINES

2015 MF9520 T4F 4
2015 MF9520 T4F Field Installed 10

2015 MF9545 T4F 13
2015 MF9545 T4F Field Installed 20

2015 MF9565 T4F 23
2015 MF9565 T4F Field Installed 30

Extended Service Coverage 32

HEADERS

MF3000 Corn Head 36

MF4200 Pick-Up Head 38

MF4300 Pick-Up Head 39

MF7200 Rigid Head 40

MF8200 Flex Head 41

MF9250 Dynaflex® Draper Head 43

MASSEY FERGUSON®

2015 MF9520 T4F Combines

2015 MF 9520 T4F

MASSEY FERGUSON®

STANDARD EQUIPMENT
F.O.B. Hesston, Kansas
Serial No. From AGCM9520FHC06101

FEEDING SYSTEM
- 3 Strand Feed Conveyor with Offset Slats and Premium Chain
- Electric Header Drive Clutch
- Electro Hydraulic Feeder Chain and Header Reverser
- Single Point Multi-Coupler Hydraulic/Electric Connection
- Quick Attach Header Hook-Up with One Point Latching System
- Full Width, Dump Style Stone Trap
- Helical Vane Front Feeder Consistently Feeds Rotor for Maximum Capacity and Performance
- Grain - Fixed Speed Header Drive
- Corn/Soybean Model - Variable Speed Header Drive
- Smartrac™ Lateral Tilt System

THRESHING AND SEPARATING SYSTEM
- Single Rotor Design with Conical Inlet, Multi-Task Threshing and Separation, Direct Residue Discharge, Chrome Rasp Bars and 21 Rotor Knives
- Grain and Corn/Soybean Model - 6 Rows of Rasp Bars in Threshing Area and 3 Rows of Rasp Bars in Separating Area
- Rotor: 27.5 in. (700 mm) Diameter, 140 in. (3,566 mm) Length
- Hydrostatically Driven Rotor with 2 Speed Gearbox
- Rotor Speed Infinitely Variable: 175-755 rpm, 175-980 rpm
- Constant Speed Rotor Control
- Rotor Reverser Operated From C2100 Terminal
- Threshing System with Adjustable Concave Deflector
- Separator System with Adjustable Separator Deflectors
- Three Concave Blanks Including Attaching Hardware
- 50.5 in. (1,280 mm) Wide Reciprocating Return Pan
- Concave Area: 2,205 in² (1.42 m²)
- Separating Area: 2,241 in² (1.44 m²)
- Grain Model -13/32 in. (10 mm) Wire Spacing, Grain Concave, Solid Overlap
- Corn/Soybean Model - 1¼ in. (32 mm) Wire Spacing, Corn/Soybean Concave, Perforated Overlap

CLEANING SYSTEM
- 50.5 in. (1,280 mm) Wide Cleaning System with Variable Fan Speed and Fan Housing Shield
- Fan Speeds: High Range 882-1,500 rpm, Low Range 590-946 rpm
- Pneumatic Cleaning Area: 7,641 in² (4.93 m²)
- 50 in. (1,270 mm) Wide Counterbalanced Cleaning Shoe
- **Grain Model**
  Chaffer - 1 1/8 in. (29 mm) Spacing, 7/8 in. (22 mm) vane
  Sieve - 1 1/8 in. (29 mm) Spacing, 7/16 in. (11 mm) vane
- **Corn/Soybean Model**
  Chaffer -1 5/8 in. (41 mm) Spacing, 1 1/4 in. (32 mm) vane
  Sieve - 1 1/8 in. (29 mm) Spacing, 7/8 in. (22 mm) vane
- Electric Chaffer and Sieve Adjustment
- Transmission Leaf Screens

GRAIN HANDLING SYSTEM
- 300 Bushel (10,570 L) Hopper Style Center-Fill Grain Tank with Solid Flip-Up Extensions
- Electro-Hydraulic Swing Unloader Tube
- Clean Grain Elevator with Roller Chain
- Grain Sample Inspection Door
- Chrome Augers Including Clean Grain, Tailings, Grain Tank Cross, and Unloading Auger
- 21 ft Auger with Replaceable End Tube and Auger Section

POWER SYSTEM
- AGCO POWER™ 84 AWF Six Cylinder, Dual Stage Wastegate, Turbocharged and Intercooled Diesel Engine
- **Tier 4F Compliant** - SCR Emissions Technology, Cooled External EGR
- **9520**
  Rated: 322 HP (240 kW) @ 2,100 RPM
  Max Boost: 398 HP (297 kW) @ 1,950 RPM
- Hydraulic Driven Rotary Vacuum Air Inlet Screen
- Belt driven Aspirated Pre-Cleaner
- Air Intake Heater System
- Two Stage Fuel Filtration
- 230 gal (870 L) Fuel Tank
- 24 gal (91 L) DEF Tank
- Battery Disconnect Switch

STANDARD EQUIPMENT
F.O.B. Hesston, Kansas
Serial No. From AGCM9520FHC06101

HYDRAULIC SYSTEM
- Closed Center Load Sensing Hydraulic System with Engine Mounted Variable Displacement Pump, 33.8 gpm (128 Lpm)
- Electric over Hydraulic Control of Header Raise and Lower Reel Raise and Lower, Unloader System
- Feeder and Header Reverser (Variable Header Drive, if Equipped)
- Two 3 in. (76.2 mm) Diameter Header Lift Cylinder
- Header Suspension Accumulator
- Additional Hydraulic Outlet

DRIVE/PROPULSION SYSTEM
- Hydrostatic Drive with Four Speed Transmission, 0 to 22.7 mph (0-36.5 km/h)
- Individual, Hydraulic Actuated, Inboard Drum Brakes
- Adjustable Steering Axle with Dual Steering Cylinders
- S42 Final Drives
- Rear Axle Tow Hitch

OPERATOR STATION
- Easy Access Cab Platform with Protective Railing and Power Swivel Ladder
- Automatic Climate Control
- Three High Capacity Air Filters
- Tilt and Telescope Hydrostatic Power Steering Column
- Operator Foot Rest
- Automatic Header Height Control (AHHC) with Return to Cut Feature
- Electric Concave Adjustment
- Hydraulic Reel Or Pick-Up Drive with Electronic Speed Controller with Manual and Automatic Modes (Combine Portion Only)
- Ergonomic Arm Rest and Controls
- Enhanced Cab Interior

Lights:
- Interior Cab Lights
- Left Row Finder/Cab Egress Light
- Eight Adjustable Halogen Headlights
- Two LED Extremity and After-Cut Lights
- LED Unload Auger Light
- Two LED Grain Tank Lights
- Service Lights
- Four Flashing Amber Warning Lights
- Two Rotary Beacon Lights
- Two LED Brake and Tail Lights
- Right Row Finder Light
- LED Shoe Light

OPERATOR STATION - CONTINUED
- Two Electrically Adjustable Rear View Mirrors, Two Adjustable Wide Angle Mirrors
- High-Back Air Ride Seat with Armrests, Adjustable Backrest, Lumbar Support, Fore and Aft Seat, Height Adjustment and Weight Adjustment
- Large Cushioned Instructor Seat and Storage Compartment
- C2100 12.1" Color Touch Screen Terminal
- AM/FM, CD, MP3, Weatherband Radio with In-Cab Speakers (Satellite Ready)
- Hand Operated Parking Brake
- Right Hand Service Platform
- Operator's Manual

PRECISION AG SYSTEM
- Fieldstar® II Yield Monitoring System with 1 Hz WAAS DGPS Receiver
- FarmWorks™ View Software
- Grain Loss Monitor System
- AGCOMMAND™ Advanced (1 Year Subscription)
- Auto-Steering™ Ready – Includes Steering Valve, Roof Bracket, Steer Angle Sensor, Display Harness and Mounting Hardware

MISCELLANEOUS
- E-Coat Primer with Powder Paint
- Safety Shielding and SMV Emblem
- Lubrication Decals
- Back-Up Alarm
- Truck Tie Down
- Greaseless Idlers
- Tool Storage Box
- Enhanced Paint Scheme and Decals

2015 MF 9520 T4F

MASSEY FERGUSON®

Order Code	Catalog Number	Description	Approx. Weight (lb.)	List Price

ONE ORDER CODE FROM EACH BOX MUST BE SPECIFIED (except as noted)

COMBINE MODEL - REQUIRED — BLOCK 01

A103	71473036	2015 MF9520G Grain Model	28000	371,662.00
A104	71473038	2015 MF9520C Corn/Soybean Model	28000	371,806.00

HEADER DRIVE - REQUIRED — BLOCK 140

Corn/Soybean				
C702	71440302	Variable Speed Header Drive	420	In Base
C701	71440301	Fixed Speed Header Drive	336	(1,845.00)
Grain				
C701	71440301	Fixed Speed Header Drive		In Base
C702	71440302	Variable Speed Header Drive		1,845.00

CHAFFER - REQUIRED — BLOCK 55

C102	C0814020	Grain Adjustable Chaffer	In Base
C103	C0814030	Corn/Soybean Adjustable Chaffer	No Charge

SIEVES - REQUIRED — BLOCK 175

9C01	C0814021	Grain Sieve (Standard on Grain Version)	In Base
9C02	C0814031	High Capacity Corn Sieve 1.62" Deep Tooth 32mm (Standard on Corn Version)	In Base
9C03	C0814032	Corn Sieve 1.12"	No Charge

SIEVE AND CHAFFER ADJUSTMENT - REQUIRED — BLOCK 40

E400	71468426	Manual Sieve and Chaffer Adjustment	In Base
E401	71445427	Electric Sieve and Chaffer Adjustment	No Charge

GRAIN BIN - REQUIRED — BLOCK 100

HP01	71482951	300 Bushel (10.570L) Grain Bin	In Base
HP04	C0862331	300 Bushel (10.570L) Powerfold Grain Bin	5,494.00

STRAW DISPOSAL SYSTEM - REQUIRED — BLOCK 240

C403	71440201	High-Velocity Straw Chopper	880	In Base
C402	71440206	Straw Spreader - Dual Mechanical	480	(3,040.00)

CHAFF DISPOSAL SYSTEM - OPTIONAL — BLOCK 250

BP01	71445859	Chaff Spreader - Dual Hydraulic (Recommended for Soybeans)	228	5,353.00

UNLOADING SPOUT - OPTIONAL — BLOCK 205

UR01	71473099	Powered Grain Saver for 21' Unloading Tube	877.00

OPERATOR SEAT - REQUIRED — BLOCK 25

AE10	71449515	Standard Seat	In Base
AE13	71460433	Deluxe Seat, Gray Fabric with Leather Side Bolsters, Heating and Cooling	1,535.00

Order Code	Catalog Number	Description	Approx. Weight (lb.)	List Price
RADIO - REQUIRED				**BLOCK 50**
A504	71448062	AM/FM, CD, MP3, Weatherband Radio (Satellite Ready)	15	In Base
A501	71393289	Less Radio		(366.00)
VIDEO OPTIONS - OPTIONAL				**BLOCK 160**
BA021	71451041	2 Camera Ready, USB converter for Display on C2100		460.00
BA022	71471742	4 Camera Ready with AgCam® 9" Quad Monitor and Mounting Bracket		802.00
Cameras and Extension Cables are not included - Order BC2K (2 Camera & Cable Kit) or BC4K (4 Camera & Cable Kit) from AGCO Parts				
Note: With factory installed option, cameras and cables will not be routed through the machine, this must be done after cameras are purchased through AGCO Parts				
LIGHTING - OPTIONAL				**BLOCK 170**
VL01	71465462	NightBlaze™ Lighting Package Includes Upgrade of 4 HID Cab Roof Lights, LED Row Finder Light (Right Hand) Plus 2 additional LED Header Extremity Lights		3,379.00
FRONT LADDER - REQUIRED				**BLOCK 30**
A401	C0855114	Power Swivel Front Ladder		In Base
A403	C0855212	Powerfold Front Ladder		No Charge
STEERING AXLE - REQUIRED				**BLOCK 10**
A201	71444710	Adjustable Axle		In Base
A202	71444713	Rear Wheel Assist Axle	600	21,248.00

2015 MF 9520 T4F

MASSEY FERGUSON®

Order Code	Catalog Number	Description	Approx. Weight (lb.)	List Price
STEERING TIRES - REQUIRED				**BLOCK 65 & 70**
P997-C997	71398237	Less Steering Tires		(5,001.00)
For Adjustable Axle				
P102-C152	71456803	18.4-R26 10 Ply R1 Firestone®		In Base
P104-C150	71419956	480/80R26 (18.4-R26) 160 A8 R4 MICHELIN® XMCL™		581.00
For Rear Wheel Assist Axle				
P102-C125	71456802	18.4-R26 10 Ply R1 Firestone®		No Charge
P103-C145	71398065	18.4-26 12 Ply R1 Goodyear®		No Charge
P104-C151	71419968	480/80R26 (18.4-R26) 160 A8 R4 MICHELIN® XMCL™		581.00
DRIVE TIRES - REQUIRED				**BLOCK 75 & 80**
P997-C997	71398236	Less Drive Tires		(11,614.00)
Single Drive Tires - Includes 4 in.(100 mm) Deck Extension				
P102-C071	71477463	900/60R32 176 A8 R1 Firestone®		In Base
P102-C063	71406034	800/65R32 (30.5L-R32) 172 R1W Firestone®		(692.00)
P104-C063	71419071	800/65R32 (30.5L-R32) 172 A8 R1W MICHELIN® Megaxbib™		No Charge
P103-C058	71472576	900/60R32 176 R1W Goodyear®		No Charge
P104-C058	71477459	900/60R32 176 A8 R1W MICHELIN® Megaxbib™	2464	1,332.00
Dual Drive Tires - Includes 25 in. (635 mm) Deck Extension				
P102-C002	71400251	18.4R42 *** R1 Firestone®		3,498.00
P102-C076	71440288	480/80R42 (18.4R42) 154 R1W Firestone®		3,852.00
P104-C076	71428518	480/80R42 (18.4R42) 151 A8 R1W MICHELIN® Agribib™		5,264.00
P102-C008	71402113	20.8R42 ** R1 Firestone®		5,604.00
P102-C015	71440287	520/85R42 (20.8R42) 157 R1W Firestone®		6,227.00
P104-C015	71419378	520/85R42 (20.8R42) 157 A8 R1W MICHELIN® Agribib™	3804	8,366.00

Note: (71406034 & 71419071 Singles and 71400251, 71440288 & 71428518 Duals can only be used with 35' or Smaller Grain Headers and 8 Row or Smaller Corn Heads)

SHIPPING WHEELS - REQUIRED				**BLOCK 85**
C997	71373046M	Less Shipping Wheels		In Base
C999	71394027M	Shipping Wheels (Returnable for Full Credit)	920	4,328.00

Order Code	Catalog Number	Description	Approx. Weight (lb.)	List Price
AUTO-GUIDE™ 3000 AUTO-STEERING - OPTIONAL				**BLOCK 60**
TX06	71482384	Auto-Guide 3000 Sub-Meter Auto-Steering System (Includes: Roof Plate, Remote Antenna, and Pigtail Harness) Displays in Existing C2100 Terminal		6,035.00
NAME PLATE - OPTIONAL				**BLOCK 35**
Z101	71402198	Personalized Name Plate		271.00
YIELD MONITOR - OPTIONAL				**BLOCK 195**
GH01	71473097	Standard Yield Monitor Ready		In Base
GH02	71463098	Yield Monitor, AG Leader.		3,125.00

Note: AG Leader Ready option includes moisture sensor, yield sensor, moisture module, speed module, and cables installed from the factory. It DOES NOT include the AG Leader Display.
The display will need to be purchased from an AG Leader dealer.
Please visit this link to identify AG Leader Dealers http://www.agleader.com/dealers/

OPTIONS INSTALLED AT FACTORY - PRIOR TO SHIPMENT

	71427860M	Ship Safe Preservative Coating. . . . . (Mandatory for Shipments November 15 - April 1)		593.00

2015 MF 9520 T4F FIELD INSTALLED

MASSEY FERGUSON®

Order Code	Catalog Number	Description	Approx. Weight (lb.)	List Price

IF MARKED 'ORDER FROM PARTS' PLEASE ORDER FIELD INSTALLED ACCESSORIES THROUGH THE AGCO PARTS DIVISION. CONSULT THE PARTS ORDERING SYSTEM USING ONEAGCO SOLUTIONS-ONLINE TO DETERMINE CURRENT AVAILABILITY AND PRICING. FOR TECHNICAL ASSISTANCE CALL THE AGCO PARTS GROUP.

THRESHING AND SEPARATING SYSTEM

	71411644	Rotor Knife Kit (21 Knives)	20	421.00
	71413180	Corn Concave 1-1/4 in. (32 mm) Hi-Wire (7)	430	3,646.00
	71413184	Corn Concave Perforated Overlap	36	443.00
	71413179	Concave Kit (42 Wires) Converts 1-1/4 in. Corn Concave to 5/8 in. Spacing	10	480.00
	71413182	Grain Concave 13/32 in. (10 mm) (7)	446	3,750.00
	71413183	Grain Concave Solid Overlap	35	112.00
	71413185	Stone Trap Cover	45	163.00

CLEANING SYSTEM

	71411658	Slow Speed Fan Drive (for Light Seed)	31	592.00
	71399009	Hill Side Kit - Chaffer, Sieve and Separator Pan Risers	24	312.00
	700962441M	Perforated Elevator Doors	12	400.00
	700959181M	Grain Chaffer/Sieve Package	188	1,838.00
	700959186M	Corn/Soybean Chaffer 1.12" Sieve Package		1,838.00
	700959185M	Corn Chaffer/1.62" Deep Tooth (32 mm) Sieve Package	183	1,968.00
	700959180M	Electric Sieve and Chaffer Adjustment		1,244.00
	700950615M	Grain Air Foil Chaffer		1,335.00
	71378013	Air Foil Chaffer Divider Kit		192.00
	700957966M	Edible Bean Kit		11,013.00

CROP RESIDUE DISPOSAL SYSTEM

	700955015M	Straw Spreader (Chopper to Straw Spreader Conversion)	430	5,342.00
	700955016M	High-Velocity Straw Chopper (Straw Spreader to Chopper Conversion)	750	7,601.00
	700959542M	Chaff Spreader - Dual Hydraulic (Recommended for Soybeans)	216	5,119.00
	700958760M	Drive Kit for MAV Straw Chopper		2,547.00

STEERING AXLE

	71440191M	Rear Wheel Assist Axle		25,560.00

2015 MF 9520 T4F FIELD INSTALLED

Order Code	Catalog Number	Description	Approx. Weight (lb.)	List Price

IF MARKED 'ORDER FROM PARTS' PLEASE ORDER FIELD INSTALLED ACCESSORIES THROUGH THE AGCO PARTS DIVISION. CONSULT THE PARTS ORDERING SYSTEM USING ONEAGCO SOLUTIONS-ONLINE TO DETERMINE CURRENT AVAILABILITY AND PRICING. FOR TECHNICAL ASSISTANCE CALL THE AGCO PARTS GROUP.

OPERATOR STATION

	Ladder Deck Extension		
71402014	4 in. (100 mm) Deck Extension	30	416.00
700957915M	12 in. (305 mm) Deck Extension	75	826.00
700957914M	25 in. (635 mm) Deck Extension	154	1,171.00
	Accessories		
71465455M	High Definition Lighting . . . . . (Includes 2 HID Cab Roof Lights and Ballast)		1,502.00
71471027M	NightBlaze™ Lighting Package . . . . . (Includes 4 HID Cab Roof Lights, LED Row Finder Light (Right Hand), 2 LED Header Extremity Lights and Brackets Fits 2009 and Newer 9005 and 9500 Series)		3,888.00
700959069M	AM/FM, CD, MP3, Weatherband Radio. . . . . (Satellite Ready)		790.00

TECHNOLOGY OPTIONS & UPGRADES

For Technology options and upgrades, see the Technology section.

VIDEO AND CAMERA OPTIONS

	Video Options – Cameras For Use with 2012 and Newer Machines with C2100 Terminal	
BQC9K-C2A	Axial Field Installed 2 Camera Kit. . . . . Includes 2 Cameras, AgCam® 9" Quad Monitor Kit, Splitter and Extension Cables	Order From Parts
BQC9K-C4A	Axial Field Installed 4 Camera Kit. . . . . Includes 4 Cameras, AgCam® 9" Quad Monitor Kit, Splitter and Extension Cables	Order From Parts
BUSBK-C2	Axial C2100 Field Installed 2 Camera Kit . . . . . Includes 2 Cameras, C2100 Terminal Adaptor Harness, Splitter and Extension Cables	Order From Parts
	Cameras - For Use with 2011 and Prior Machines with C2000 Terminal	
AC-C1	AgCam® Video Camera with Extension Cables . . . (Requires AC-A2C to Connect to C2000 Terminal)	Order From Parts
AC-A2C	Connection Cable for C2000 Terminal (Required) . .	Order From Parts

Note: *Refer to Parts for additional AgCam® components*

OPERATOR'S MANUAL

700736121	French Operator's Manual and Decals	Order From Parts
700736122	Spanish Operator's Manual and Decals	Order From Parts

MASSEY FERGUSON®

2015 MF9545 T4F Combines

STANDARD EQUIPMENT
F.O.B. Hesston, Kansas
Serial No. From AGCM95450FHC07101

FEEDING SYSTEM
- Grain Model - Fixed Speed Header Drive
- Corn/Soybean Model - Variable Speed Header Drive
- Smartrac™ Lateral Tilt System
- Single Point Multi-Coupler Hydraulic/Electric Connection
- Quick Attach Header Hook-Up with One Point Latching System
- 4 Strand Feed Conveyor with Offset Slats and Premium Chain
- Electric Header Drive Clutch
- Electro Hydraulic Feed Conveyor and Header Reverser
- Full Width, Dump Style Stone Trap
- Multi-Zone Feed housing

THRESHING AND SEPARATING SYSTEM
- Single Rotor Design
- Rotor: 31.5 in. (800 mm) Diameter; 140 in. (3,566 mm) Length
- Intake - Two sets of Intake Flighting
- Threshing - Four Overlapping Helical Rows of Segmented Threshing Elements (28 Elements)
- Separation - Two overlapping Helical Rows of Aggressive Threshing Elements (10 Elements) Two Overlapping Helical Rows of Interchangeable Separator Tines and Separator Paddles (14 Tines and 4 Paddles)
- Discharge - Two Discharge Paddles
- Mechanical Driven Rotor with 2 Speed Gearbox
- Rotor Speed Infinitely Variable:
- Low 264 - 709 rpm, High 460 to 1235 rpm
- Separator Reverser Operated from C2100 Terminal
- Four Concave Cover Plates Including Attaching Hardware
- Threshing and Separator System with Removable Concave and Separator Grate Deflectors
- 61.8 in. (1,570 mm) Wide Reciprocating Return Pan
- Upper Separator Cover Doors
- Concave Area: 2,115 in² (1.36 m²)
- Separating Area: 3420 in² (2.2 m²)
- **Grain Model** - Small Wire Grain Concave, 0.41 in. (10.4 mm) wire spacing and 6 Removable Concave Interrupter Plates
- **Corn/Soybean Model** – Round Bar Concave, 0.63 in (16 mm) bar Spacing
- Composite Processor Doors

CLEANING SYSTEM
- 61.8 in. (1,570 mm) Wide Cleaning System with Hydraulically Driven Variable Fan Speed and Fan Housing Shield
- Fan Speeds: 100 rpm – 1350 rpm
- Electric Adjustable Choke Control
- Pneumatic Cleaning Area: 9,455 in2 (6.10 m2)
- 61 in. (1,560 mm) Wide Counterbalanced Cleaning Shoe
- **Grain Model**
  Chaffer - 1 1/8 in. (29 mm) Spacing, 7/8 in. (22 mm) vane
  Sieve - 1 1/8 in. (29 mm) Spacing, 7/16 in. (11 mm) vane
- **Corn/Soybean Model**
  Chaffer -1 5/8 in. (41 mm) Spacing, 1 1/4 in. (32 mm) vane
  Sieve - 1 5/8 in. (41 mm) Spacing, 7/8 in. (22 mm) vane
- Electric Chaffer and Sieve Adjustment
- Transmission Leaf Screens

GRAIN HANDLING SYSTEM
- 350 Bushel (12,334L) Hopper Style Center-Fill Grain Tank with Solid Flip-Up Extensions
- Proportional Electro-Hydraulic Swing Unloader Tube
- 21 ft Auger with Replaceable end Tube and Auger Section
- Clean Grain Elevator with Roller Chain
- Cross Auger Clean Out Doors
- Tailings Volume Sensor
- Grain Sample Inspection Door
- Chrome Augers Including Clean Grain, Tailings, Grain Tank Cross, and Unloading Auger

POWER SYSTEM
- AGCO POWER™ 98 AWF Seven Cylinder, Dual Stage Wastegate, Turbo Charged and Inter-Cooled Diesel Engine
- **Tier 4F Compliant** - SCR Emissions Technology, Cooled External EGR
- **9545**
  Rated: 375 HP (280 kW) @ 2100 rpm
  Max Boost: 451 HP (336 kW) @ 1,950 rpm
- Belt driven Aspirated Pre-Cleaner
- 230 gal (870 L) Fuel Tank
- 24 gal (91 L) DEF Tank
- Battery Disconnect Switch

2015 MF 9545 T4F

MASSEY FERGUSON®

STANDARD EQUIPMENT
F.O.B. Hesston, Kansas
Serial No. From AGCM95450FHC07101

HYDRAULIC SYSTEM
- Closed Center Load Sensing Hydraulic System with Variable Displacement Pump, 33.8 gpm (128 Lpm)
- Electric over Hydraulic Control of Header Raise and Lower Reel Raise and Lower, Unloader System
- Feeder and Header Reverser (Variable Header Drive, if Equipped)
- Two 3.5 in. (89 mm) Diameter Header Lift Cylinder
- Header Suspension Accumulator
- Additional Hydraulic Outlet

DRIVE/PROPULSION SYSTEM
- Two-Speed Hydrostatic Drive with Four Speed Transmission, 0 to 22.7 mph (0-36.5 km/h)
- Individual, Hydraulic Actuated, Inboard Drum Type Brakes
- Adjustable Steering Axle with Dual Steering Cylinders
- S42 Final Drives
- Rear Axle Tow Hitch

OPERATOR STATION
- Easy Access Cab Platform with Protective Railing and Power Swivel Ladder
- Automatic Climate Control
- Three High Capacity Air Filters
- Tilt and Telescope Hydrostatic Power Steering Column
- Operator Foot Rests
- Automatic Header Height Control (AHHC) with Return to Cut Feature
- Electric Concave Adjustment
- Hydraulic Reel or Pick-Up Drive with Electronic Speed Controller with Manual and Automatic Modes
- Ergonomic Arm Rest and Controls
- Enhanced Cab Interior

- **Lights:**
- Interior Cab Lights
- Left Row Finder/Cab Egress Light
- Eight Adjustable Halogen Headlights
- Two LED Extremity and After-Cut Lights
- LED Unload Auger Light
- Two LED Grain Tank Lights
- Service Lights
- Four Flashing Amber Warning Lights
- Two Rotary Beacon Lights
- Two LED Brake and Tail Lights
- Right Row Finder Light
- LED Shoe Light

OPERATOR STATION CONTINUED
- Two Electronically Adjustable Rear View Mirrors, Two Adjustable Wide Angle Mirrors
- High-Back Air Ride Seat with Armrests, Adjustable Backrest, Lumbar Support, Fore and Aft Seat, Height Adjustment and Weight Adjustment
- Large Cushioned Instructor Seat and Storage Compartment
- C2100 12.1" Color Touch Screen Terminal
- AM/FM, CD, MP3, Weatherband Radio with In-Cab Speakers (Satellite Ready)
- Hand Operated Parking Brake
- Right Hand Service Platform
- Operator's Manual

PRECISION AG SYSTEM
- Fieldstar® II Yield Monitoring System with 1 Hz WAAS DGPS Receiver
- FarmWorks™ View Software
- Grain Loss Monitor System
- AGCOMMAND™ Advanced (1 Year Subscription)
- Auto-Steering Ready – Includes Steering Valve, Roof Bracket, Steer Angle Sensor, Display Harness and Mounting Hardware

MISCELLANEOUS
- E-Coat Primer with Powder Paint
- Safety Shielding and SMV Emblem
- Lubrication Decals
- Back-Up Alarm
- Truck Tie Down
- Greaseless Idlers
- Tool Storage Box
- New Paint Scheme and Decals

MASSEY FERGUSON®

Class 7 & 8 Axial Recommended Configurations		
Option Category	**Corn Version** **Order Code and Description**	**Grain Version** **Order Code and Description**
Header Drive	(C702) Variable Speed Header Drive	(C701) Fixed Speed Header Drive
Chaffer	(C103) Corn Adjustable Chaffer	(C102) Grain Adjustable Chaffer
Concaves	(3C04) Round Bar Concaves	(3C03) Small Wire Concaves
Sieve	(9C02) Corn Sieve 1.62" Shallow Tooth (.875"/22 mm vane)	(9C01) Grain Sieve
Sieve & Chaffer Adjustment	(E401) Electric Sieve & Chaffer Adjustment	(E401) Electric Sieve & Chaffer Adjustment
Grain Bin	(HP03) 350 Bushel (12.3L) Powerfold Grain Bin	(HP03) 350 Bushel (12.3L) Powerfold Grain Bin
Unloading Tube	(C221) 24 ft (7.3M) Unloading Tube	(C221) 24 ft (7.3M) Unloading Tube
Powered Grain Saver	(UR02) Powered Grain Saver for 24' Unloading Tube	(UR02) Powered Grain Saver for 24' Unloading Tube
Straw Disposal System	(C403) MAV Straw Chopper	(C403) MAV Straw Chopper
Operator Seat	(AE13) Deluxe Seat	(AE13) Deluxe Seat
Radio	(A504) AM/FM CD, MP3, Weatherband Radio	(A504) AM/FM CD, MP3, Weatherband Radio
Video Option	(BA022) 4 Camera Ready with AgCam 9" Quad Monitor & Bracket	(BA022) 4 Camera Ready with AgCam 9" Quad Monitor & Bracket
Lighting Option	(VL01) NightBlaze Lighting Package	(VL01) NightBlaze Lighting Package
Front Ladder	(A401) Power Swivel Front Ladder	(A401) Power Swivel Front Ladder
Steer Tires (Adj Axle)	(P102-C157 or P104-C134) 600/70R30 R1W Firestone or 620/75R26 R1W Michelin	(P102-C146 or P104-C146) 750/65R26 (28L-R26) R1W (Firestone or Michelin)
Steer Tires (RWA)	(P102-C148 or P104-C141) 600/70R30 R1W Firestone or 620/75R26 R1W Michelin	(P102-C147 or P104-C147) 750/65R26 (28L-R26) R1W (Firestone or Michelin)
Drive Tires	(P102-C015 or P104-C015) 520/85R42 (20.8R42) R1W (Firestone or Michelin)	(P102-C015 or P104-C015) 520/85R42 (20.8R42) R1W (Firestone or Michelin)
Shipping Wheels	(C997) Less Shipping Wheels	(C997) Less Shipping Wheels
Auto-Steering	(TX06) Auto-Guide 3000 Sub-Meter Auto-Steering	(TX06) Auto-Guide 3000 Sub-Meter Auto-Steering
Field Installed Kits	(700960060) Large Wire Concaves (Qty: 6)	(700960060) Large Wire Concaves (Qty: 6)
AGCO Parts	TBD Perforated Concave Overlap Panel	(700744451) Reverse Bar (1 pair) 10 of (71471964) Smooth Bar

2015 MF 9545 T4F

MASSEY FERGUSON®

ONE ORDER CODE FROM EACH BOX MUST BE SPECIFIED (except as noted)

COMBINE MODEL - REQUIRED — BLOCK 01

Order Code	Catalog Number	Description	Approx. Weight (lb.)	List Price
A103	71473040	2015 MF9545G Grain Model	38693	429,051.00
A104	71473042	2015 MF9545C Corn/Soybean Model	38693	429,217.00

HEADER DRIVE - REQUIRED — BLOCK 140

Order Code	Catalog Number	Description	Approx. Weight (lb.)	List Price
Corn/Soybean				
C702	71472713	Variable Speed Header Drive	420	In Base
C701	71472714	Fixed Speed Header Drive	336	(1,845.00)
Grain				
C701	71472714	Fixed Speed Header Drive	336	In Base
C702	71472713	Variable Speed Header Drive	420	1,845.00

FACTORY INSTALLED CONCAVES - REQUIRED — BLOCK 180

Order Code	Catalog Number	Description	List Price
Corn/Soybean			
3C04	71473029	Round Bar Concaves (Option Includes 2 Large Wire Concaves Shipped Loose)	In Base
3C05	71473026	Large Wire Concaves	No Charge
Grain			
3C03	71473027	Small Wire Concaves	In Base
3C05	71473026	Large Wire Concaves	No Charge

CHAFFER - REQUIRED — BLOCK 55

Order Code	Catalog Number	Description	List Price
C102	C0814023	Grain Adjustable Chaffer	In Base
C103	C0814033	Corn/Soybean Adjustable Chaffer	No Charge

SIEVES - REQUIRED — BLOCK 175

Order Code	Catalog Number	Description	List Price
9C01	C0814024	Grain Sieve (Standard on Grain Version)	In Base
9C02	C0814037	Corn Sieve 1.62" Shallow Tooth (.875"/22 mm vane) (Standard on Corn Version)	In Base
9C03	C0814035	Corn Sieve 1.12"	No Charge

SIEVE AND CHAFFER ADJUSTMENT - REQUIRED — BLOCK 40

Order Code	Catalog Number	Description	List Price
E401	C0814011	Electric Sieve and Chaffer Adjustment	In Base
E400	C0814012	Manual Sieve and Chaffer Adjustment	(1,245.00)

GRAIN BIN - REQUIRED — BLOCK 100

Order Code	Catalog Number	Description	List Price
HP02	71482652	350 Bushel (12.334L) Grain Bin	In Base
HP03	C0862330	350 Bushel (12.334L) Powerfold Grain Bin	5,494.00

UNLOADING TUBE - REQUIRED — BLOCK 110

Order Code	Catalog Number	Description	List Price
C220	C0864303	21 Ft. Unloading Tube	In Base
C221	C0864304	24 Ft. Unloading Tube	546.00

UNLOADING SPOUT - OPTIONAL — BLOCK 205

Order Code	Catalog Number	Description	List Price
UR01	71473099	Powered Grain Saver for 21' Unloading Tube	877.00
UR02	71473092	Powered Grain Saver for 24' Unloading Tube	877.00

Order Code	Catalog Number	Description	Approx. Weight (lb.)	List Price
STRAW DISPOSAL SYSTEM - REQUIRED				**BLOCK 240**
C403	71440351	MAV Straw Chopper	970	In Base
C402	71440355	Straw Spreader - Dual Mechanical	500	(3,040.00)
WINDROW ATTACHMENT				**BLOCK 255**
BM01	71455377	Windrow Kit		592.00
CHAFF DISPOSAL SYSTEM - OPTIONAL				**BLOCK 250**
BP01	71455378	Chaff Spreader - Dual Hydraulic (Recommended for Soybeans)	265	5,273.00
OPERATOR SEAT - REQUIRED				**BLOCK 25**
AE10	71449515	Standard Seat		In Base
AE13	71460433	Deluxe Seat, Gray Fabric with Leather Side Bolsters, Heating and Cooling		1,535.00
RADIO - REQUIRED				**BLOCK 50**
A504	71448062	AM/FM, CD, MP3, Weatherband Radio (Satellite Ready)	15	In Base
A501	71393289	Less Radio		(366.00)
VIDEO OPTIONS - OPTIONAL				**BLOCK 160**
BA021	71451041	2 Camera Ready, USB Converter for Display on C2100		460.00
BA022	71471742	4 Camera Ready with AgCam® 9" Quad Monitor and Mounting Bracket		802.00

Cameras and Extension Cables are not included - Order BC2K (2 Camera & Cable Kit) or BC4K (4 Camera & Cable kit) from AGCO Parts

Note: With factory installed option, cameras and cables will not be routed through the machine, this must be done after cameras are purchased through AGCO Parts

LIGHTING - OPTIONAL				**BLOCK 170**
VL01	71465462	NightBlaze™ Lighting Package Includes Upgrade of 4 HID Cab Roof Lights, LED Row Finder Light (Right Hand) Plus 2 additional LED Header Extremity Lights		3,379.00
FRONT LADDER - REQUIRED				**BLOCK 30**
A401	C0855114	Power Swivel Front Ladder		In Base
A403	C0855212	Powerfold Front Ladder		No Charge
STEERING AXLE - REQUIRED				**BLOCK 10**
A201	C0885020	Adjustable Axle		In Base
A202	C0885010	Rear Wheel Assist Axle	600	24,970.00

2015 MF 9545 T4F

MASSEY FERGUSON®

Order Code	Catalog Number	Description	Approx. Weight (lb.)	List Price
STEERING TIRES - REQUIRED				**BLOCK 65 & 70**
P997-C997	71398237	Less Steering Tires		(5,001.00)
For Heavy Duty Adjustable Axle				
P102-C159	71445529	23.1R26 R1 Firestone®		In Base
P104-C153	71436113	480/80R26 (18.4-R26) 160 A8 R4 MICHELIN® XMCL™		No Charge
P102-C157	71445527	600/70R30 162 A8 R1W Firestone®		1,111.00
P103-C134	71408161	620/75R26 (23.1-R26) 166 R1W Goodyear®	1288	No Charge
P104-C134	71419366	620/75R26 (23.1-R26) 166 A8 R1W MICHELIN® Megaxbib™	1148	571.00
P102-C146	71440290	750/65R26 (28L-R26) 166 R1W Firestone®		881.00
P104-C146	71419360	750/65R26 (28L-R26) 166 A8 R1W MICHELIN® Megaxbib™	1420	1,167.00
For Rear Wheel Assist Axle				
P102-C160	71445530	23.1R26 R1 Firestone®		In Base
P104-C154	71436114	480/80R26 (18.4-R26) 160 A8 R4 MICHELIN® XMCL™		No Charge
P102-C158	71445528	600/70R30 162 A8 R1W Firestone®		1,111.00
P103-C141	71411507	620/75R26 (23.1-R26) 166 R1W Goodyear®	1282	No Charge
P104-C141	71419369	620/75R26 (23.1-R26) 166 A8 R1W MICHELIN® Megaxbib™	1142	571.00
P102-C147	71440291	750/65R26 (28L-R26) 166 R1W Firestone®		881.00
P104-C147	71419363	750/65R26 (28L-R26) 166 A8 R1W MICHELIN® Megaxbib™	1418	1,167.00

DRIVE TIRES - REQUIRED				**BLOCK 75 & 80**
P997-C997	71398236	Less Drive Tires		(11,614.00)
Single Drive Tires - Includes 4 in. (100mm) Deck Extension				
P102-C071	71477463	900/60R32 176 A8 R1 Firestone®		In Base
P103-C058	71472576	900/60R32 176 R1W Goodyear®		No Charge
P104-C058	71477459	900/60R32 176 A8 R1W MICHELIN® Megaxbib™	2464	1,332.00
Dual Drive Tires - Includes 25 in. (635mm) Deck Extension				
P102-C008	71402113	20.8R42 ** R1 Firestone®		5,604.00
P102-C015	71440287	520/85R42 (20.8R42) 157 R1W Firestone®		6,227.00
P104-C015	71419378	520/85R42 (20.8R42) 157 A8 R1W MICHELIN® Agribib™	3804	8,366.00
P102-C077	7148764	620/70R42 (23.1R42) 160 R1W Firestone®		10,886.00
P104-C077	71426085	620/70R42 (23.1R42) 166 A8 R1W MICHELIN® Magaxbib™		14,538.00

Note: 7148764 or 71426085 Duals Recommended for Grain Headers Larger than 35' and Corn Heads Larger than 8 Row

Order Code	Catalog Number	Description	Approx. Weight (lb.)	List Price

SHIPPING WHEELS - REQUIRED — BLOCK 85

C997	71373046M	Less Shipping Wheels		In Base
C999	71394027M	Shipping Wheels . . . . . (Returnable for Full Credit)	920	4,328.00

AUTO-GUIDE™ 3000 AUTO-STEERING - OPTIONAL — BLOCK 60

TX06	71482384	Auto-Guide 3000 Sub-Meter Auto-Steering System (Includes: Roof Plate, Remote Antenna, and Pigtail Harness) Displays in Existing C2100 Terminal		6,035.00

NAME PLATE - OPTIONAL — BLOCK 35

Z101	71402198	Personalized Name Plate		271.00

YIELD MONITOR - OPTIONAL — BLOCK 195

GH01	71473097	Standard Yield Monitor Ready		In Base
GH02	71473098	Yield Monitor, AG Leader.		3,125.00

Note: AG Leader Ready option includes moisture sensor, yield sensor, moisture module, speed module, and cables installed from the factory. It DOES NOT include the AG Leader Display.
The display will need to be purchased from an AG Leader dealer.
Please visit this link to identify AG Leader Dealers http://www.agleader.com/dealers/

OPTIONS INSTALLED AT FACTORY - PRIOR TO SHIPMENT

	71427860M	Ship Safe Preservative Coating . . . . . (Mandatory for Shipments November 15 - April 1)		593.00
	C0850010M	Auto Lubrication System		6,477.00

2015 MF 9545 T4F FIELD INSTALLED

MASSEY FERGUSON®

IF MARKED 'ORDER FROM PARTS' PLEASE ORDER FIELD INSTALLED ACCESSORIES THROUGH THE AGCO PARTS DIVISION. CONSULT THE PARTS ORDERING SYSTEM USING ONEAGCO SOLUTIONS-ONLINE TO DETERMINE CURRENT AVAILABILITY AND PRICING. FOR TECHNICAL ASSISTANCE CALL THE AGCO PARTS GROUP.

Order Code	Catalog Number	Description	Approx. Weight (lb.)	List Price
THRESHING AND SEPARATING SYSTEM				
	700959255M	Separator Paddle Kit (Qty 4)		188.00
	700960059M	Small Wire Concaves Kit (Qty 6)		1,463.00
	700960060M	Large Wire Concaves Kit (Qty 6)		1,188.00
	700960061M	Round Bar Concaves Kit (Qty 6)		1,367.00
	700960063M	Separator Finger Grate Kit (Qty 6)		1,635.00
	700960064M	Separator Bar and Wire Grates Kit (Qty 6)		1,911.00
CLEANING SYSTEM				
	700962441M	Perforated Elevator Doors	12	400.00
	700959183M	Grain Chaffer/Sieve Package	188	2,105.00
	700959188M	Corn/Soybean Chaffer 1.12" Sieve Package		2,020.00
	700959187M	Corn Chaffer/1.62" Deep Tooth (32 mm) Sieve Package	183	2,105.00
	71378013	Air Foil Chaffer Divider Kit		192.00
	700959180M	Electric Sieve and Chaffer Adjustment		1,244.00
	700950616M	Airfoil Chaffer		1,516.00
	700962442M	Edible Bean Cleaning Kit		598.00
	700959556M	Return Pan Extension.		175.00
	700959549M	Risers, Side Hill - Chaffer	24	312.00
GRAIN HANDLING SYSTEM				
	700959195M	Unloading Tube Extension (For Conversion for 21-24 Ft. Unloading Tube Only)		1,171.00
	700960397M	350 Bushel Powerfold Grain Bin Extension Includes Components to Install on 2009 and Newer 9795 Equipped with HD Axle and 9895		8,391.00
CROP RESIDUE DISPOSAL SYSTEM				
	700959539M	MAV Straw Chopper	835	7,829.00
	700959538M	Straw Spreader	450	4,794.00
	700959541M	Chaff Spreader (Recommended for Soybeans).	265	6,821.00
	700959540M	Windrow Kit		656.00
STEERING AXLE				
	71440192M	Rear Wheel Assist Axle		33,053.00

2015 MF 9545 T4F FIELD INSTALLED

Order Code	Catalog Number	Description	Approx. Weight (lb.)	List Price

IF MARKED 'ORDER FROM PARTS' PLEASE ORDER FIELD INSTALLED ACCESSORIES THROUGH THE AGCO PARTS DIVISION. CONSULT THE PARTS ORDERING SYSTEM USING ONEAGCO SOLUTIONS-ONLINE TO DETERMINE CURRENT AVAILABILITY AND PRICING. FOR TECHNICAL ASSISTANCE CALL THE AGCO PARTS GROUP.

OPERATOR STATION

	Ladder Deck Extension		
71402014	4 in. (100 mm) Deck Extension	30	416.00
700957915M	12 in. (305 mm) Deck Extension	75	826.00
700957914M	25 in. (635 mm) Deck Extension	154	1,171.00
	Accessories		
71465455M	High Definition Lighting . . . . . (Includes 2 HID Cab Roof Lights and Ballast)		1,502.00
71471027M	NightBlaze™ Lighting Package . . . . . (Includes 4 HID Cab Roof Lights, LED Row Finder Light (Right Hand), 2 LED Header Extremity Lights and Brackets Fits 2009 and Newer 9005 and 9500 Series)		3,888.00
700959069M	AM/FM, CD, MP3, Weatherband Radio. . . . . (Satellite Ready)		790.00

TECHNOLOGY OPTIONS & UPGRADES

For Technology options and upgrades, see the Technology section.

VIDEO AND CAMERA OPTIONS

	Video Options – Cameras For Use with 2012 and Newer Machines with C2100 Terminal	
BQC9K-C2A	Axial Field Installed 2 Camera Kit. . . . . Includes 2 Cameras, AgCam® 9" Quad Monitor Kit, Splitter and Extension Cables	Order From Parts
BQC9K-C4A	Axial Field Installed 4 Camera Kit. . . . . Includes 4 Cameras, AgCam® 9" Quad Monitor Kit, Splitter and Extension Cables	Order From Parts
BUSBK-C2	Axial C2100 Field Installed 2 Camera Kit . . . . . Includes 2 Cameras, C2100 Terminal Adaptor Harness, Splitter and Extension Cables	Order From Parts
	Cameras - For Use with 2011 and Prior Machines with C2000 Terminal	
AC-C1	AgCam® Video Camera with Extension Cables . . . (Requires AC-A2C to Connect to C2000 Terminal)	Order From Parts
AC-A2C	Connection Cable for C2000 Terminal (Required) . .	Order From Parts

Note: *Refer to Parts for additional AgCam® components*

OPERATOR'S MANUAL

700736125	French Operator's Manual and Decals	Order From Parts
700736126	Spanish Operator's Manual and Decals	Order From Parts

MASSEY FERGUSON®

2015 MF9565 T4F Combines

STANDARD EQUIPMENT
F.O.B. Hesston, Kansas
Serial No. From AGCM95650FHC08101

FEEDING SYSTEM
- Grain Model - Fixed Speed Header Drive
- Corn/Soybean Model - Variable Speed Header Drive
- Smartrac™ Lateral Tilt System
- Single Point Multi-Coupler Hydraulic/Electric Connection
- Quick Attach Header Hook-Up with One Point Latching System
- 4 Strand Feed Conveyor with Offset Slats and Premium Chain
- Electric Header Drive Clutch
- Electro Hydraulic Feed Conveyor and Header Reverser
- Full Width, Dump Style Stone Trap
- Multi-Zone Feed housing

THRESHING AND SEPARATING SYSTEM
- Single Rotor Design
- Rotor: 31.5 in. (800 mm) Diameter; 140 in. (3,566 mm) Length
- Intake - Two sets of Intake Flighting
- Threshing - Four Overlapping Helical Rows of Segmented Threshing Elements (28 Elements)
- Separation - Two overlapping Helical Rows of Aggressive Threshing Elements (10 Elements)
  Two Overlapping Helical Rows of Interchangeable Separator Tines and Separator Paddles (14 Tines and 4 Paddles)
- Discharge - Two Discharge Paddles
- Mechanical Driven Rotor with 2 Speed Gearbox
- Rotor Speed Infinitely Variable:
- Low 264 - 709 rpm, High 460 to 1235 rpm
- Separator Reverser Operated from C2100 Terminal
- Four Concave Cover Plates Including Attaching Hardware
- Threshing and Separator System with Removable Concave and Separator Grate Deflectors
- 61.8 in. (1,570 mm) Wide Reciprocating Return Pan
- Upper Separator Cover Doors
- Concave Area: 2,115 in² (1.36 m²)
- Separating Area: 3420 in² (2.2 m²)
- Grain Model - Small Wire Grain Concave, 0.41 in. (10.4 mm) wire spacing and 6 Removable Concave Interrupter Plates
- Corn/Soybean Model – Round Bar Concave, 0.63 in (16 mm) bar Spacing
- Composite Processor Doors

CLEANING SYSTEM
- 61.8 in. (1,570 mm) Wide Cleaning System with Hydraulically Driven Variable Fan Speed and Fan Housing Shield
- Fan Speeds: 100 rpm – 1350 rpm
- Electric Adjustable Choke Control
- Pneumatic Cleaning Area: 9,455 in2 (6.10 m2)
- 61 in. (1,560 mm) Wide Counterbalanced Cleaning Shoe
- **Grain Model**
  Chaffer - 1 1/8 in. (29 mm) Spacing, 7/8 in. (22 mm) vane
  Sieve - 1 1/8 in. (29 mm) Spacing, 7/16 in. (11 mm) vane
- **Corn/Soybean Model**
  Chaffer -1 5/8 in. (41 mm) Spacing, 1 1/4 in. (32 mm) vane
  Sieve - 1 5/8 in. (41 mm) Spacing, 7/8 in. (22 mm) vane
- Electric Chaffer and Sieve Adjustment
- Transmission Leaf Screens

GRAIN HANDLING SYSTEM
- 350 Bushel (12,334L) Hopper Style Center-Fill Grain Tank with Solid Flip-Up Extensions
- Proportional Electro-Hydraulic Swing Unloader Tube
- 21 ft Auger with Replaceable End Tube and Auger Section
- Clean Grain Elevator with Roller Chain
- Cross Auger Clean Out Doors
- Tailings Volume Sensor
- Grain Sample Inspection Door
- Chrome Augers Including Clean Grain, Tailings, Grain Tank Cross, and Unloading Auger

POWER SYSTEM
- AGCO POWER™ 98 AWF Seven Cylinder, Dual Stage Wastegate, Turbo Charged and Inter-Cooled Diesel Engine
- **Tier 4F Compliant** - SCR Emissions Technology, Cooled External EGR
- **MF9565**
  Rated: 460 HP (343 kW) @ 2,100 rpm
  Max Boost: 489 HP (365 kW) @ 1,950 rpm
- Belt driven Aspirated Pre-Cleaner
- 230 gal (870 L) Fuel Tank
- 24 gal (91 L) DEF Tank
- Battery Disconnect Switch

2015 MF 9565 T4F

MASSEY FERGUSON®

STANDARD EQUIPMENT
F.O.B. Hesston, Kansas
Serial No. From AGCM95650FHC08101

HYDRAULIC SYSTEM
- Closed Center Load Sensing Hydraulic System with Variable Displacement Pump, 33.8 gpm (128 Lpm)
- Electric over Hydraulic Control of Header Raise and Lower Reel Raise and Lower, Unloader System
- Feeder and Header Reverser (Variable Header Drive, if Equipped)
- Two 3.5 in. (89 mm) Diameter Header Lift Cylinder
- Header Suspension Accumulator
- Additional Hydraulic Outlet

DRIVE/PROPULSION SYSTEM
- Two-Speed Hydrostatic Drive with Four Speed Transmission, 0 to 22.7 mph (0-36.5 km/h)
- Individual, Hydraulic Actuated, Inboard Drum Type Brakes
- Adjustable Steering Axle with Dual Steering Cylinders
- S42 Final Drives
- Rear Axle Tow Hitch

OPERATOR STATION
- Easy Access Cab Platform with Protective Railing and Power Swivel Ladder
- Automatic Climate Control
- Three High Capacity Air Filters
- Tilt and Telescope Hydrostatic Power Steering Column
- Operator Foot Rests
- Automatic Header Height Control (AHHC) with Return to Cut Feature
- Electric Concave Adjustment
- Hydraulic Reel or Pick-Up Drive with Electronic Speed Controller with Manual and Automatic Modes
- Ergonomic Arm Rest and Controls
- Enhanced Cab Interior
- **Lights:**
- Interior Cab Lights
- Left Row Finder/Cab Egress Light
- Eight Adjustable Halogen Headlights
- Two LED Extremity and After-Cut Lights
- LED Unload Auger Light
- Two LED Grain Tank Lights
- Service Lights
- Four Flashing Amber Warning Lights
- Two Rotary Beacon Lights
- Two LED Brake and Tail Lights
- Right Row Finder Light
- LED Shoe Light

OPERATOR STATION - CONTINUED
- Two Electronically Adjustable Rear View Mirrors, Two Adjustable Wide Angle Mirrors
- Air Ride Seat with Armrests, Adjustable
- High-Back Air Ride Seat with Armrests, Adjustable Backrest, Lumbar Support, Fore and Aft Seat, Height Adjustment and Weight Adjustment
- Large Cushioned Instructor Seat and Storage Compartment
- C2100 12.1" Color Touch Screen Terminal
- AM/FM, CD, MP3, Weatherband Radio with In-Cab Speakers (Satellite Ready)
- Hand Operated Parking Brake
- Right Hand Service Platform
- Operator's Manual

PRECISION AG SYSTEM
- Fieldstar® II Yield Monitoring System with 1 Hz WAAS DGPS Receiver
- FarmWorks™ View Software
- Grain Loss Monitor System
- AGCOMMAND™ Advanced (1 Year Subscription)
- Auto-Steering Ready – Includes Steering Valve, Roof Bracket, Steer Angle Sensor, Display Harness and Mounting Hardware

MISCELLANEOUS
- E-Coat Primer with Powder Paint
- Safety Shielding and SMV Emblem
- Lubrication Decals
- Back-Up Alarm
- Truck Tie Down
- Greaseless Idlers
- Tool Storage Box
- New Paint Scheme and Decals

MASSEY FERGUSON®

Class 7 & 8 Axial Recommended Configurations		
Option Category	**Corn Version** **Order Code and Description**	**Grain Version** **Order Code and Description**
Header Drive	(C702) Variable Speed Header Drive	(C701) Fixed Speed Header Drive
Concaves	(3C04) Round Bar Concaves	(3C03) Small Wire Concaves
Chaffer	(C103) Corn Adjustable Chaffer	(C102) Grain Adjustable Chaffer
Sieve	(9C02) Corn Sieve 1.62" Shallow Tooth (.875"/22 mm vane)	(9C01) Grain Sieve
Sieve & Chaffer Adjustment	(E401) Electric Sieve & Chaffer Adjustment	(E401) Electric Sieve & Chaffer Adjustment
Grain Bin	(HP03) 350 Bushel (12.3L) Powerfold Grain Bin	(HP03) 350 Bushel (12.3L) Powerfold Grain Bin
Unloading Tube	(C221) 24 ft (7.3M) Unloading Tube	(C221) 24 ft (7.3M) Unloading Tube
Powered Grain Saver	Powered Grain Saver for 24' Unloading Tube	Powered Grain Saver for 24' Unloading Tube
Straw Disposal System	(C403) MAV Straw Chopper	(C403) MAV Straw Chopper
Operator Seat	(AE13) Deluxe Seat	(AE13) Deluxe Seat
Radio	(A504) AM/FM CD, MP3, Weatherband Radio	(A504) AM/FM CD, MP3, Weatherband Radio
Video Option	(BA022) 4 Camera Ready with AgCam 9" Quad Monitor & Bracket	(BA022) 4 Camera Ready with AgCam 9" Quad Monitor & Bracket
Lighting Option	(VL01) NightBlaze Lighting Package	(VL01) NightBlaze Lighting Package
Front Ladder	(A401) Power Swivel Front Ladder	(A401) Power Swivel Front Ladder
Steer Tires (Adj Axle)	(P102-C157 or P104-C134) 600/70R30 R1W Firestone or 620/75R26 R1W Michelin	(P102-C146 or P104-C146) 750/65R26 (28L-R26) R1W (Firestone or Michelin)
Steer Tires (RWA)	(P102-C148 or P104-C141) 600/70R30 R1W Firestone or 620/75R26 R1W Michelin	(P102-C147 or P104-C147) 750/65R26 (28L-R26) R1W (Firestone or Michelin)
Drive Tires	(P102-C015 or P104-C015) 520/85R42 (20.8R42) R1W (Firestone or Michelin)	(P102-C015 or P104-C015) 520/85R42 (20.8R42) R1W (Firestone or Michelin)
Shipping Wheels	(C997) Less Shipping Wheels	(C997) Less Shipping Wheels
Auto-Steering	(TX06) Auto-Guide 3000 Sub-Meter Auto-Steering	(TX06) Auto-Guide 3000 Sub-Meter Auto-Steering
Field Installed Kits	(700960060) Large Wire Concaves (Qty: 6)	(700960060) Large Wire Concaves (Qty: 6)
AGCO Parts	TBD Perforated Concave Overlap Panel	(700744451) Reverse Bar (1 pair) 10 of (71471964) Smooth Bar (Qty 1)

2015 MF 9565 T4F

MASSEY FERGUSON®

Order Code	Catalog Number	Description	Approx. Weight (lb.)	List Price

ONE ORDER CODE FROM EACH BOX MUST BE SPECIFIED (except as noted)

COMBINE MODEL - REQUIRED — BLOCK 01

A103	71473044	2015 MF9565G Grain Model	38693	460,668.00
A104	71473046	2015 MF9565C Corn/Soybean Model	38693	460,847.00

HEADER DRIVE - REQUIRED — BLOCK 140

Corn/Soybean				
C702	71472713	Variable Speed Header Drive	420	In Base
C701	71472714	Fixed Speed Header Drive	336	(1,845.00)
Grain				
C701	71472714	Fixed Speed Header Drive		In Base
C702	71472713	Variable Speed Header Drive		1,845.00

FACTORY INSTALLED CONCAVES - REQUIRED — BLOCK 180

Corn/Soybean			
3C04	71473029	Round Bar Concaves (Option Includes 2 Large Wire Concaves Shipped Loose)	In Base
3C05	71473026	Large Wire Concaves	No Charge
Grain			
3C03	71473027	Small Wire Concaves	In Base
3C05	71473026	Large Wire Concaves	No Charge

CHAFFER - REQUIRED — BLOCK 55

C103	C0814033	Corn/Soybean Adjustable Chaffer	In Base
C102	C0814023	Grain Adjustable Chaffer	No Charge

SIEVES - REQUIRED — BLOCK 175

9C01	C0814024	Grain Sieve (Standard on Grain Version)	In Base
9C02	C0814037	Corn Sieve 1.62" Shallow Tooth (.875"/22 mm vane) (Standard on Corn Version)	In Base
9C03	C0814035	Corn Sieve 1.12"	No Charge

SIEVE AND CHAFFER ADJUSTMENT - OPTIONAL — BLOCK 40

E401	C0814011	Electric Sieve and Chaffer Adjustment	In Base
E400	C0814012	Manual Sieve and Chaffer Adjustment	(1,245.00)

GRAIN BIN - REQUIRED — BLOCK 100

HP02	71482652	350 Bushel (12.334L) Grain Bin	In Base
HP03	C0862330	350 Bushel (12.334L) Powerfold Grain Bin	5,494.00

UNLOADING TUBE - REQUIRED — BLOCK 110

C220	C0864303	21 Ft. Unloading Tube	In Base
C221	C0864304	24 Ft. Unloading Tube	546.00

UNLOADING SPOUT - OPTIONAL — BLOCK 205

UR01	71473099	Powered Grain Saver for 21' Unloading Tube	877.00
UR02	71473092	Powered Grain Saver for 24' Unloading Tube	877.00

Order Code	Catalog Number	Description	Approx. Weight (lb.)	List Price
STRAW DISPOSAL SYSTEM - REQUIRED				**BLOCK 240**
C403	71440351	MAV Straw Chopper	967	In Base
C402	71440355	Straw Spreader - Dual Mechanical	520	(3,040.00)
WINDROW ATTACHMENT - OPTIONAL				**BLOCK 255**
BM01	71455377	Windrow Kit		592.00
CHAFF DISPOSAL SYSTEM - OPTIONAL				**BLOCK 250**
BP01	71455378	Chaff Spreader - Dual Hydraulic (Recommended for Soybeans)	80	5,273.00
OPERATOR SEAT - REQUIRED				**BLOCK 25**
AE10	71449515	Standard Seat		In Base
AE13	71460433	Deluxe Seat, Gray Fabric with Leather Side Bolsters, Heating and Cooling		1,535.00
RADIO - REQUIRED				**BLOCK 50**
A504	71448062	AM/FM, CD, MP3, Weatherband Radio (Satellite Ready)	15	In Base
A501	71393289	Less Radio		(366.00)
VIDEO OPTIONS - OPTIONAL				**BLOCK 160**
BA021	71451041	2 Camera Ready, USB converter for Display on C2100		460.00
BA022	71471742	4 Camera Ready with AgCam® 9" Quad Monitor and Mounting Bracket		802.00

Cameras and Extension Cables are not included - Order BC2K (2 Camera & Cable Kit) or BC4K (4 Camera & Cable Kit) from AGCO Parts

Note: With factory installed option, cameras and cables will not be routed through the machine, this must be done after cameras are purchased through AGCO Parts

LIGHTING - OPTIONAL				**BLOCK 170**
VL01	71465462	NightBlaze™ Lighting Package Includes Upgrade of 4 HID Cab Roof Lights, LED Row Finder Light (Right hand) Plus 2 additional LED Header Extremity Lights		3,379.00
FRONT LADDER - REQUIRED				**BLOCK 30**
A401	C0855114	Power Swivel Front Ladder		In Base
A403	C0855212	Powerfold Front Ladder		No Charge
STEERING AXLES - REQUIRED				**BLOCK 10**
A201	C0885020	Adjustable Axle		In Base
A202	C0885010	Rear Wheel Assist Axle	600	24,970.00

2015 MF 9565 T4F

MASSEY FERGUSON®

Order Code	Catalog Number	Description	Approx. Weight (lb.)	List Price
STEERING TIRES - REQUIRED				**BLOCK 65 & 70**
P997-C997	71398237	Less Steering Tires		(5,001.00)
For Adjustable Axle (A201 - C0885020)				
P102-C159	71445529	23.1R26 R1 Firestone®		In Base
P102-C157	71445527	600/70R30 162 A8 R1W Firestone®		1,111.00
P103-C134	71408161	620/75R26 (23.1-26) 166 R1W Goodyear®	1288	No Charge
P104-C134	71419366	620/75R26 (23.1-R26) 166 A8 R1W MICHELIN® Megaxbib™	1148	571.00
P102-C146	71440290	750/65R26 (28L-R26) 166 R1W Firestone®		881.00
P104-C146	71419360	750/65R26 (28L-R26) 166 A8 R1W MICHELIN® Megaxbib™	1420	1,167.00
For Rear Wheel Assist Axle (A202 - C0885010)				
P102-C160	71445530	23.1R26 R1 Firestone®		In Base
P102-C158	71445528	600/70R30 162 A8 R1W Firestone®		1,111.00
P103-C141	71411507	620/75R26 (23.1-R26) 166 R1W Goodyear®	1282	No Charge
P104-C141	71419369	620/75R26 (23.1-R26) 166 A8 R1W MICHELIN® Megaxbib™	1142	571.00
P102-C147	71440291	750/65R26 (28L-R26) 166 R1W Firestone®		881.00
P104-C147	71419363	750/65R26 (28L-R26) 166 A8 R1W MICHELIN® Megaxbib™	1418	1,167.00

DRIVE TIRES - REQUIRED				**BLOCK 75 & 80**
P997-C997	71398236	Less Drive Tires		(11,614.00)
Single Drive Tires - Includes 4 in. (100 mm) Deck Extension				
P102-C071	71477463	900/60R32 176 A8 R1 Firestone®		In Base
P103-C058	71472576	900/60R32 176 R1 Goodyear®		No Charge
P104-C058	71477459	900/60R32 176 A8 R1W MICHELIN® Megaxbib™	2464	1,332.00
Dual Drive Tires - Includes 25 in. (635 mm) Deck Extension				
P102-C008	71402113	20.8R42 ** R1 Firestone®		5,604.00
P102-C015	71440287	520/85R42 (20.8R42) 157 R1W Firestone®		6,227.00
P104-C015	71419378	520/85R42 (20.8R42) 157 A8 R1W MICHELIN® Agribib™	3804	8,366.00
P102-C077	7148764	620/70R42 (23.1R42) 160 R1W Firestone®		10,886.00
P104-C077	71426085	620/70R42 (23.1R42) 166 A8 R1W MICHELIN® Magaxbib™		14,538.00

Note: 7148764 or 71426085 Duals Recommended for Grain Headers Larger than 35' and Corn Heads Larger than 8 Row

SHIPPING WHEELS - REQUIRED				**BLOCK 85**
C997	71373046M	Less Shipping Wheels		In Base
C999	71394027M	Shipping Wheels (Returnable for Full Credit)	920	4,328.00

Order Code	Catalog Number	Description	Approx. Weight (lb.)	List Price
AUTO-GUIDE™ 3000 AUTO-STEERING - OPTIONAL				**BLOCK 60**
TX06	71482384	Auto-Guide 3000 Sub-Meter Auto-Steering System (Includes: Roof Plate, Remote Antenna, and Pigtail Harness) Displays in Existing C2100 Terminal		6,035.00
NAME PLATE - OPTIONAL				**BLOCK 35**
Z101	71402198	Personalized Name Plate		271.00
YIELD MONITOR - OPTIONAL				**BLOCK 195**
GH01	71473097	Standard Yield Monitor Ready		In Base
GH02	71473098	Yield Monitor, AG Leader.		3,125.00

Note: AG Leader Ready option includes moisture sensor, yield sensor, moisture module, speed module, and cables installed from the factory. It DOES NOT include the AG Leader Display.
The display will need to be purchased from an AG Leader dealer.
Please visit this link to identify AG Leader Dealers http://www.agleader.com/dealers/

OPTIONS INSTALLED AT FACTORY - PRIOR TO SHIPMENT

	71427860M	Ship Safe Preservative Coating . . . . . (Mandatory for Shipments November 15 - April 1)	593.00
	C0850010M	Auto Lubrication System	6,477.00

2015 MF 9565 T4F FIELD INSTALLED

MASSEY FERGUSON®

Order Code	Catalog Number	Description	Approx. Weight (lb.)	List Price

FIELD INSTALLED ACCESSORIES (order as desired)

IF MARKED 'ORDER FROM PARTS' PLEASE ORDER FIELD INSTALLED ACCESSORIES THROUGH THE AGCO PARTS DIVISION. CONSULT THE PARTS ORDERING SYSTEM USING ONEAGCO SOLUTIONS-ONLINE TO DETERMINE CURRENT AVAILABILITY AND PRICING. FOR TECHNICAL ASSISTANCE CALL THE AGCO PARTS GROUP.

THRESHING AND SEPARATING SYSTEM

700959255M	Separator Paddle Kit (Qty 4)		188.00
700960059M	Small Wire Concaves Kit (Qty 6)		1,463.00
700960060M	Large Wire Concaves Kit (Qty 6)		1,188.00
700960061M	Round Bar Concaves Kit (Qty 6)		1,367.00
700960063M	Separator Finger Grate Kit (Qty 6)		1,635.00
700960064M	Separator Bar and Wire Grates Kit (Qty 6)		1,911.00

CLEANING SYSTEM

700962441M	Perforated Elevator Doors	125	400.00
700959183M	Grain Chaffer/Sieve Package	188	2,105.00
700959188M	Corn/Soybean Chaffer 1.12" Sieve Package		2,020.00
700959187M	Corn Chaffer/1.62" Deep Tooth (32 mm) Sieve Package	183	2,105.00
71378013	Air Foil Chaffer Divider Kit		192.00
700959180M	Electric Sieve and Chaffer Adjustment		1,244.00
700950616M	Airfoil Chaffer		1,516.00
700962442M	Edible Bean Cleaning Kit		598.00
700959556M	Return Pan Extension.		175.00
700959549M	Risers, Hill Side - Chaffer	24	312.00

GRAIN HANDLING SYSTEM

700959195M	Unloading Tube Extension (For Conversion for 21-24 Ft. Unloading Tube Only)		1,171.00
700960397M	350 Bushel Powerfold Grain Bin Extension Includes Components to Install on 2009 and Newer 9795 Equipped with HD Axle and 9895		8,391.00

CROP RESIDUE DISPOSAL SYSTEM

700959539M	MAV Straw Chopper	835	7,829.00
700959538M	Straw Spreader	450	4,794.00
700959541M	Chaff Spreader (Recommended for Soybeans).	265	6,821.00
700959540M	Windrow Kit		656.00

STEERING AXLE

71440192M	Rear Wheel Assist Axle		33,053.00

2015 MF 9565 T4F FIELD INSTALLED

Order Code	Catalog Number	Description	Approx. Weight (lb.)	List Price

IF MARKED 'ORDER FROM PARTS' PLEASE ORDER FIELD INSTALLED ACCESSORIES THROUGH THE AGCO PARTS DIVISION. CONSULT THE PARTS ORDERING SYSTEM USING ONEAGCO SOLUTIONS-ONLINE TO DETERMINE CURRENT AVAILABILITY AND PRICING. FOR TECHNICAL ASSISTANCE CALL THE AGCO PARTS GROUP.

OPERATORS STATION

	Ladder Deck Extension		
71402014	4 in. (100 mm) Deck Extension	30	416.00
700957915M	12 in. (305 mm) Deck Extension	75	826.00
700957914M	25 in. (635 mm) Deck Extension	154	1,171.00
	Accessories		
71465455M	High Definition Lighting . . . . . (Includes 2 HID Cab Roof Lights and Ballast)		1,502.00
71471027M	NightBlaze™ Lighting Package . . . . . (Includes 4 HID Cab Roof Lights, LED Row Finder Light (Right Hand), 2 LED Header Extremity Lights and Brackets Fits 2009 and Newer 9005 and 9500 Series)		3,888.00
700959069M	AM/FM, CD, MP3, Weatherband Radio. . . . . (Satellite Ready)		790.00

TECHNOLOGY OPTIONS & UPGRADES

For Technology options and upgrades, see the Technology section.

VIDEO AND CAMERA OPTIONS

	Video Options – Cameras For Use with 2012 and Newer Machines with C2100 Terminal	
BQC9K-C2A	Axial Field Installed 2 Camera Kit. . . . . Includes 2 Cameras, AgCam® 9" Quad Monitor Kit, Splitter and Extension Cables	Order From Parts
BQC9K-C4A	Axial Field Installed 4 Camera Kit. . . . . Includes 4 Cameras, AgCam® 9" Quad Monitor Kit, Splitter and Extension Cables	Order From Parts
BUSBK-C2	Axial C2100 Field Installed 2 Camera Kit . . . . . Includes 2 Cameras, C2100 Terminal Adaptor Harness, Splitter and Extension Cables	Order From Parts
	Cameras - For Use with 2011 and Prior Machines with C2000 Terminal	
AC-C1	AgCam® Video Camera with Extension Cables . . . (Requires AC-A2C to Connect to C2000 Terminal)	Order From Parts
AC-A2C	Connection Cable for C2000 Terminal (Required) . .	Order From Parts

Note: *Refer to Parts for additional AgCam® components*

OPERATOR'S MANUAL

700736125	French Operator's Manual and Decals	Order From Parts
700737126	Spanish Operator's Manual and Decals	Order From Parts

MASSEY FERGUSON®

EXTENDED SERVICE COVERAGE
(Administered by Cat Financial)

The AGCO Corporation Extended Service Coverage (ESC) Program is available for new Massey Ferguson combines.

The program provides the owner of a new Massey Ferguson combine with assurance against unexpected repair costs for covered component breakdown(s) due to defects in materials or factory workmanship under normal use.

The ESC Program online quoting, registration and claims management system may be accessed at https://masseyferguson.escsolutions.com

Contacts

Issue	Contact	Email Address	Phone Number
Underwriting and Administration	Jody Evans – Account Executive	Jody.Evans@cat.com	615-341-8106
Claims	Todd Day – Claims Manager	Todd.Day@cat.com	615-341-8273

First Response – Customer Service Center Contacts

Country	Customer Support for Registrations, Claims, Invoices, Payments and Claims Inquiries. *Toll Free*	Help Desk Support and Accessibility Inquiries *Number Dialed In-Country*
North America	1-800-223-3549	1-800-562-6179

Program Information

- ESC is not the same as the Standard Factory Warranty. ESC is optional and runs concurrent with the SFW.
- A deductible option must be selected for the ESC. Deductibles apply on a per failure basis.
- Component coverage descriptions, transfer of coverage, standard reimbursement, exclusions and limitations may be accessed at https://masseyferguson.escsolutions.com
- Used Combine ESC is also available at the same website.

EXTENDED SERVICE COVERAGE FEES

New Combine Comprehensive Coverage Fees (Dealer Net*)

Combine Family	Coverage Term (Months)	Coverage Term (Separator Hours)	Deductible Rate (Per Failure)	
			$0	$250
Class VI Combines (9520)	36 Months (Factory Warranty +12mo)	600	2930	2480
		900	4630	3920
		1200	5910	5040
	48 Months (Factory Warranty +24mo)	900	4980	4220
		1200	7040	5980
		1500	8950	7620
Class VII Combines (9540)	36 Months (Factory Warranty +12mo)	600	3390	2890
		900	5380	4570
		1200	6880	5850
	48 Months (Factory Warranty +24mo)	900	5790	4900
		1200	8190	6950
		1500	10400	8860
Class VIII Combines (9560)	36 Months (Factory Warranty +12mo)	600	4120	3510
		900	6510	5530
		1200	8320	7090
	48 Months (Factory Warranty +24mo)	900	7000	5930
		1200	9900	8420
		1500	12590	10730

Note: Only Dealer net prices shown. Dealer can elect to add margin at point of sale.

RESERVED

HEADERS

Mississippi State Contract Discount: 10%

2015 MF 3000 CORN HEAD

MASSEY FERGUSON®

STANDARD EQUIPMENT
F.O.B. Hesston, Kansas
Serial No. From AGCMXXXX0FHCH1101

- Individual Self-Contained Row Unit with Enclosed Gear Box Drive
- Low Profile Design, 21.5 Degree Entry Angle
- Adjustable Gathering Chain Guides
- Electric Adjustable Stripper Plates with Position Indicator
- Single Point Multi-Coupler Hydraulic/Electrical Connection
- Aggressive Snapping Rolls with Replaceable Blades
- 16 in. (407 mm) Diameter and 24 in. (610 mm) Pitch Cross Auger
- Grass and Vine Knives
- Heavy Duty 5 x 5 in. (127 x 127 mm) Tool Bar
- Quick Hook-Up
- Plastic Dividers and Points (Except for 12 Row 20 in. and 12 Row 22 in.)
- Extremity Lights
- Frame Is Set-Up for Smartrac™ Opening
- 18T Sprocket for the Main Drive and 12T for the Conveyor Drive
- PTO Drive Shaft
- Greaseless Idlers

ONE ORDER CODE FROM EACH BOX MUST BE SPECIFIED (except as noted)

BASE MACHINE - REQUIRED

Order Code	Catalog Number	Description	Approx. Weight (lb.)	List Price
MF3000-6				
A102-30INCH	71418709	630	4375	47,092.00
A102-36INCH	71418710	636	4575	48,687.00
MF3000-8				
A102-30INCH	71418711	830	5625	60,660.00
A102-36INCH	71418712	836	6050	62,789.00
A102-38INCH	71418713	838	6050	62,789.00
MF3000-12				
A102-20INCH	71418714	1220	7210	81,209.00
A102-22INCH	71418715	1222	7851	81,209.00
A102-30INCH	71418716	1230	8800	94,626.00

PLASTIC DIVIDERS FOR 1220 AND 1222 HEADERS

Contact GVL

59711 U. S. Highway12
Litchfield, MN, 55355
Toll Free 1-888-657-3664
Phone # (320) 693-8411
Fax # (320) 693-6983
e-mail info@gvlpoly.com

Order Code	Catalog Number	Description	Approx. Weight (lb.)	List Price

FIELD INSTALLED ACCESSORIES (order as desired)

IF MARKED 'ORDER FROM PARTS' PLEASE ORDER FIELD INSTALLED ACCESSORIES THROUGH THE AGCO PARTS DIVISION. CONSULT THE PARTS ORDERING SYSTEM USING ONEAGCO SOLUTIONS-ONLINE TO DETERMINE CURRENT AVAILABILITY AND PRICING. FOR TECHNICAL ASSISTANCE CALL THE AGCO PARTS GROUP.

SMARTRAC™ COMPLETING PACKAGE

	700961060M	Smartrac™ Sensor Package . . . . . (Not Available for 20" or 22")	948.00

PERFORMANCE PACKAGES

	71406030	Conveyor 16T Sprocket Package. . . . . (33% Speed Increase)	Order From Parts
	71399055	Main drive 16T Sprocket Package . . . . . (10% Speed Reduction)	Order From Parts
	71397088	Main Drive 13T Sprocket Package . . . . . (27% Speed Reduction)	Order From Parts
	71419111	Ring Package (1 Per Row)	Order From Parts
	71419110	Grass Knife Package (1 Per Row)	Order From Parts

MISCELLANEOUS

	71413989	5.7 Degree Header Tilt Frame	626.00
	71397078	Over Head Conveyor Hood	995.00
	71397069	Outer Fender Extension for Tall Standing Corn. . . . (not for 1220 and 1222 Corn Heads)	615.00

PRESERVATIVE COATING

	71428520M	Ship Safe Preservative Coating. . . . . (Mandatory for Shipments November 15 - April 1)	586.00

Mississippi State Contract Discount: 10%

MF 4200 PICK-UP HEAD

MASSEY FERGUSON®

STANDARD EQUIPMENT
F.O.B. REGINA, CANADA
Serial No. From ACGM4200E

2014 Pick-up Head

- 24 in. (610 mm) Auger for High Capacity Feeding
- Heavy Duty, Fully Shielded Driveshaft with Built-In Clutch
- Single Point Multi-Coupler Hydraulic/Electrical Connection
- Auto Header Height Control

Pick-Up Attachment

- Swathmaster - Conventional Belt Pickup
- Large Front and Rear 26 in. (660 mm) Drapers Assures Smooth Feeding
- 18 x 8.50 Flotation Tires

ONE ORDER CODE FROM EACH BOX MUST BE SPECIFIED (except as noted)

MF 4200 WINDROW PICK-UP HEAD - REQUIRED — BLOCK 20

Order Code	Catalog Number	Description	Approx. Weight (lb)	List Price
MF4200S-13	71462403	13 ft. Pick-Up Head with 14 ft. Swathmaster	3200	30,459.00
MF4200S-15	71462404	15 ft. Pick-Up Head with 16 ft. Swathmaster	3300	35,635.00

DRIVELINE - REQUIRED

	71419590M	Driveline for 13 ft. Pick-Up Header.		1,091.00
	71419592M	Driveline for 15 ft. Pick-Up Header.		1,148.00

FIELD COMPLETION KITS - REQUIRED

	71419602M	Adapter Package MF9520		1,086.00
	71419603M	Adapter Package MF9545/MF9565		1,046.00

FIELD INSTALLED ACCESSORIES (order as desired)

	71419594	Adapter Conversion Kit (9520 to 9540/9560)		1,173.00
	71419595	Adapter Conversion Kit (9540/9560 to 9520)		1,173.00

Subject to Availability

Mississippi State Contract Discount: 10%

MF 4300 PICK-UP HEAD

STANDARD EQUIPMENT
F.O.B. REGINA, CANADA
Serial No. From AGCM4300F

2015 Pick-up Head

- 24 in. (610 mm) Auger for High Capacity Feeding
- Heavy Duty, Fully Shielded Driveshaft with Built-In Clutch
- Single Point Multi-Coupler Hydraulic/Electrical Connection
- Auto Header Height Control

Pick-Up Attachment

- Swathmaster - Conventional Belt Pickup
- Large Front and Rear 26 in. (660 mm) Drapers Assures Smooth Feeding
- 18 x 8.50 Flotation Tires
- Front and Rear Drapers Driven Independently By 2 Hydraulic Drive Motors
- Tracking Groove Design On Drapers
- 5" Front and Rear Drum For Draper Rollers

Order Code	Catalog Number	Description	Approx. Weight (lb)	List Price

ONE ORDER CODE FROM EACH BOX MUST BE SPECIFIED (except as noted)

MF 4300 PICK-UP HEADER - REQUIRED **BLOCK 01**

MF4300-15	71482752	15 ft. Pick-Up Head with 16 ft. Swathmaster		31,373.00

FIELD INSTALLED ACCESSORIES (order as desired)

	71482759M	Transverse Combine Completing Package . . . . . (Field Conversion from Axial)		4,136.00
	71482758M	Axial Combine Completing Package . . . . . (Field Conversion from Transverse)		4,136.00
	71482760M	Hold Down Bars for Extreme Light Crops.		1,148.00

Mississippi State Contract Discount: 10%

2015 MF 7200 RIGID HEAD

MASSEY FERGUSON®

STANDARD EQUIPMENT
F.O.B. Hesston, Kansas
Serial No. From AGCM72XX0FHW07101

- Quick Attach Header Hook-Up
- Heavy Duty Welded Frame Construction
- 30 in. (762 mm) Diameter Center Finger Auger with 27 in. (686 mm) Pitch Flighting
- Chain Drive Conveyor with 6 Bolt Hub and Friction Disc Slip Clutch
- Reel Lift Ram Stops
- Fine Reel Height Adjustment
- ¾ in. (19 mm) Diameter Hi-Strength Conveyor Fingers with Urethane Guides
- SCH Epicyclic Sickle Drive
- Electro-Hydraulic Reel Lift
- Electric Fore And Aft Reel Adjust
- Single Point Multi-Coupler Hookup
- Angle Retarders
- Extremity Lights
- 8 Degree Adjustable Cutter Bar Tilt
- Hydrostatic Reel Drive, 0-63 rpm
- Right-Hand Reel Drive
- Bolt-On Sickle Sections
- Adjustable Sickle Head
- High Capacity Sickle with Forged Guards and Spring Hold Downs
- High Strength "Z" Shaped Cutter Bar
- Rock Guard
- Single Sickle@ 565 rpm
- Independent Floating Dividers
- Flexible Drive Shaft
- Reel Torque Limiter

ONE ORDER CODE FROM EACH GROUP MUST BE SPECIFIED (except as noted)

MF7200 RIGID HEADERS - REQUIRED — BLOCK 01

Order Code	Catalog Number	Description	Approx. Weight (lb.)	List Price
MF7200-25	71466565YF	25 ft. (7.6 m)	3772	30,691.00
MF7200-30	71466566YF	30 ft. (9.1 m)	4350	33,214.00
MF7200-35	71466567YF	35 ft. (10.7 m)		42,486.00

REELS - REQUIRED — BLOCK 15

Bat Reel, Small Diameter				
H703	71408084	25 ft. (7.6 m)		3,045.00
H703	71408083	30 ft. (9.1 m)		3,651.00
H703	71408082	35 ft. (10.7m)		4,260.00
Pick Up Reel (HCC Level 2)				
H705	71408064	25 ft. (7.6 m)		6,087.00
H705	71408063	30 ft. (9.1 m)		7,306.00
H705	71408020	35 ft. (10.7 m)		8,523.00

FIELD INSTALLED ACCESSORIES (order as desired)

700958715M	25' - 35' HCC Orbit Reel Kit	3,745.00
71428520M	Ship Safe Preservative Coating (Mandatory for Shipments November 15 - April 1)	586.00
71430156	External Skid Shoe Kit	127.00

2015 MF 8200 FLEX HEAD

STANDARD EQUIPMENT
F.O.B. Hesston, Kansas
Serial No. From AGCM82XX0FHW08101

- ¾ in. (19 mm) Diameter Hi-Strength Conveyor Fingers with Urethane Guides
- SCH Epicyclical Drive
- Electro-Hydraulic Reel Lift
- Power (Electric) Fore and Aft Reel Adjust
- Angle Retarders
- Extremity Lights
- Plastic Skid Plates
- Stainless Steel Feather Sheets
- Hydrostatic Reel Drive, 0-58 rpm
- Right-Hand Reel Drive
- Bolt-On Sickle Sections
- Adjustable SCH Sickle Head
- SCH Sickle and Guards with Roller Guides
- Header Height Control
- Balanced 30 in. (762 mm) Diameter Full Finger Auger with 27 in. (686 mm) Pitch Flighting
- Single Sickle @ 470 rpm
- Independent Floating Dividers
- Flexible Drive Shaft
- Reel Torque Limiter
- Quick Attach Header Hook-Up
- Single Multi-Coupler for Electrical and Hydraulic Connections
- Welded Frame Construction
- Chain Drive Conveyor with 6 Bolt Hub and Friction Disc Slip Clutch
- Reel Lift Ram Stops
- Fine Reel Height Adjustment

ONE ORDER CODE FROM EACH GROUP MUST BE SPECIFIED (except as noted)

MF 8200 FLEX HEADER - REQUIRED — BLOCK 01

Order Code	Catalog Number	Description	Approx. Weight (lb.)	List Price
MF8200-20	71466568YF	20 ft. (6.1 m)		31,257.00
MF8200-25	71466569YF	25 ft. (7.6 m)		32,981.00
MF8200-30	71466570YF	30 ft. (9.1 m)		37,302.00
MF8200-35	71466571YF	35 ft. (10.7 m)		43,680.00

SICKLE - REQUIRED — BLOCK 05

Order Code	Catalog Number	Description	Approx. Weight (lb.)	List Price
Schumacher (SCH) Sickle and Guard (With Roller Guides)				
H506	71428419	20 ft. (6.1 m)		In Base
H506	71428420	25 ft. (7.6 m)		In Base
H506	71428421	30 ft. (9.1 m)		In Base
H506	71428422	35 ft. (10.7 m)		In Base

REELS - REQUIRED — BLOCK 15

Order Code	Catalog Number	Description	Approx. Weight (lb.)	List Price
Less Reel				
H704	71468401	Less Reel		No Charge
Pick-Up Reel (HCC Level 2)				
H705	71408065	20 ft. (6.1 m)		4,870.00
H705	71408064	25 ft. (7.6 m)		6,087.00
H705	71408063	30 ft. (9.1 m)		7,306.00
H705	71408020	35 ft. (10.7 m)		8,523.00

MF 8200 FIELD INSTALLED

Order Code	Catalog Number	Description	Approx. Weight (lb)	List Price
FIELD INSTALLED ACCESSORIES (order as desired)				
RAISED FEATHER SHEETS				
	700957979M	20 ft. (6.1 m)		798.00
	700957980M	25 ft. (7.6 m)		940.00
	700957981M	30 ft. (9.1 m)		1,082.00
	700957585M	35 ft. (10.7 m)		1,224.00
MISCELLANEOUS				
	71408024	Long Wing Dividers	62	650.00
	700958715M	25' - 35' Orbit Reel Kit.		3,745.00
	700958714M	20' Orbit Reel Kit		1,954.00
	71430156	External Skid Shoe Kit		127.00
	71428520M	Ship Safe Preservative Coating. (Mandatory for Shipments November 15 - April 1)		586.00

MASSEY FERGUSON®

2015 MF9250 DYNAFLEX® DRAPER HEAD

STANDARD EQUIPMENT
F.O.B. Hesston, Kansas
Serial No. From AGCM92500FHD01101

- Header Frame Structure with Upper and Lower Tubes
- 12 Degree Header Tilt Hydraulic Adjust on Interface
- Feeder House Platform
- Flexible Cutterbar – Independent Dampened Tilt Arms Every 30”, Sectioned Float Pads
- 8 in. Hydraulic Cutterbar Flotation with Accumulator and Adjustment from Cab
- Shaft Driven, Timed and Balanced Double Sickle Drive with 3.34” Stroke at 1200 rpm
- Dampened Sickle Drive PTO Shaft
- Synchronous Belt Drive for Auger and Center Draper
- V-guide on Center and Side Drapers for Consistent Tracking
- Mechanical Side and Center Draper Drives
- Rubberized Draper Canvas 41’ Wide Moving at 502 ft/min (2.5 m/sec)
- Spring Loaded Side Draper Tension with Indicator
- Central Canvas 48.5’ Wide Moving at 572 ft/min (2.7 m/sec)
- 21” Auger Diameter, 46.3” Wide Rotating at 200 rpm
- Auger Flighting Filler (in box)
- Stainless Steel Auger Pan
- Forward Auger Position
- Clutch Protection for Center Draper and Auger
- Stainless Steel Front Belt Guards
- Hydraulic Variable Speed Reel Drive with Pressure Relief Valve
- Electric Reel Fore/Aft Adjustable from Cab
- Single Point Hook Up
- Plastic Dividers and End Shields
- Quick attach shields
- Auto header control system
- HCC Level 2 Pick-up Reel (6 Bats with Plastic Tines) with Reel Bat Flip Over
- Reel Divider with Crop Divider Rod

***Note: The combine has to be equipped with lateral tilt and additional hydraulic outlet.**

Order Code	Catalog Number	Description	Approx. Weight (lb.)	List Price
ONE ORDER CODE FROM EACH BOX MUST BE SPECIFIED (except as noted)				
BASE MACHINE - REQUIRED				**BLOCK 01**
MF9250-25	71466513YF	25 ft.(7.6m)		71,527.00
MF9250-30	71466514YF	30 ft (9.1m)		85,051.00
MF9250-35	71466515YF	35 ft (10.7m)		92,304.00
MF9250-40	71466516YF	40 ft (12.1m)		101,156.00
SICKLE - REQUIRED (High Capacity Recommended for Best Cutting Performance)				**BLOCK 05**
H508	71424607	High Capacity Row Crop 25 ft.		In Base
	71424606	High Capacity Row Crop 30 ft		In Base
	71424605	High Capacity Row Crop 35 ft.		In Base
	71423628	High Capacity Row Crop 40 ft.		In Base
H503	71420433	High Capacity Small Grain 25 ft.		In Base
	71420432	High Capacity Small Grain 30 ft.		In Base
	71420431	High Capacity Small Grain 35 ft.		In Base
	71420442	High Capacity Small Grain 40 ft.		In Base
H509	71420437	SCH Row Crop 25 ft.		558.00
	71420436	SCH Row Crop 30 ft.		669.00
	71420435	SCH Row Crop 35 ft.		781.00
	71420443	SCH Row Crop 40 ft.		892.00
SKID SHOES - REQUIRED				**BLOCK 10**
HG02	71471960	High Profile 25 ft		In Base
	71471961	High Profile 30 ft		In Base
	71471962	High Profile 35 ft		In Base
	71471963	High Profile 40 ft		In Base
HG01	71471947	Low Profile 25 ft.		461.00
	71471948	Low Profile 30 ft.		551.00
	71471949	Low Profile 35 ft.		644.00
	71471950	Low Profile 40 ft.		736.00
	(Note: Low Profile Option Includes 5 Degree Sickle Wedge Kit - 71462622)			

MF9250 DYNAFLEX® DRAPER HEAD

MASSEY FERGUSON®

Order Code	Catalog Number	Description	List Price
REMOVE IN BASE REEL - OPTIONAL			**BLOCK 15**
H704	71435194	Remove In Base Reel, 25 ft.	(2,723.00)
	71460435	Remove In Base Reel, 30 ft.	(2,922.00)
	71460438	Remove In Base Reel, 35 ft.	(3,415.00)
	71460439	Remove In Base Reel, 40 ft.	(3,952.00)
AHHC DRAG RODS - OPTIONAL			**BLOCK 35**
C503	71424616	AHHC Drag Rods	493.00
SPARE SICKLE - OPTIONAL			**BLOCK 45**
H601	71424594	High Capacity Row Crop 25 ft..	811.00
	71424593	High Capacity Row Crop 30 ft..	968.00
	71424592	High Capacity Row Crop 35 ft..	1,123.00
	71424591	High Capacity Row Crop 40 ft..	1,275.00
H602	71424589	High Capacity Small Grain 25 ft.	811.00
	71424588	High Capacity Small Grain 30 ft.	968.00
	71424587	High Capacity Small Grain 35 ft.	1,123.00
	71424586	High Capacity Small Grain 40 ft.	1,275.00
H603	71424604	SCH Row Crop 25 ft.	811.00
	71424603	SCH Row Crop 30 ft.	968.00
	71424602	SCH Row Crop 35 ft.	1,123.00
	71424601	SCH Row Crop 40 ft.	1,275.00
H604	71424599	SCH Small Grain 25 ft.	811.00
	71424598	SCH Small Grain 30 ft.	968.00
	71424597	SCH Small Grain 35 ft.	1,123.00
	71424596	SCH Small Grain 40 ft.	1,275.00

FIELD INSTALLED ACCESSORIES (order as desired)

700961058M	AHHC Drag Rods – For use as Rigid Header.	493.00
700958053M	Reel Speed Increase Kit	212.00
700958381M	Snout Divider - Wheat	367.00
700956893M	Slow Speed Transport Kit (30' to 40' Headers)	6,257.00
700960018M	Pressure Gauge . . . . . (For Use with Combines Prior to Model Year 2009)	104.00
71472597M	Reel Arm and Divider Rod	357.00
71427873M	Ship Safe Preservative Coating. . . . . (Mandatory for Shipments November 15 - April 1)	586.00

HESSTON by MASSEY FERGUSON

HAY EQUIPMENT

TABLE OF CONTENTS

	PAGE
Warranty	**5**
Self Propelled Windrowers	**6**
WR9800 Series Self Propelled Windrower Product Information	7
WR9870 Self Propelled Windrower	8
WR9860 Self Propelled Windrower	11
WR9840 Self Propelled Windrower	14
WR9740 Self Propelled Windrower **SUBJECT TO AVAILABILITY**	17
Headers	**20**
9195 Rotary Header for WR9770, WR9760, WR9870, WR9860	21
9196 Rotary Header for WR9770, WR9760, WR9870, WR9860	22
9186 Rotary Header for WR9770, WR9760, WR9870, WR9860	23
9183 Rotary Header for WR9770, WR9760, WR9870, WR9860	24
9146 Dual Sickle Auger Headers for WR9770, WR9760, WR9740, WR9735, WR9725, WR9870, WR9860, WR9840	25
9126 Dual Sickle Auger Headers for WR9770, WR9760, WR9740, WR9735, WR9725, WR9870, WR9860, WR9840	
5300 Center Delivery & Shiftable Draper Headers for WR9770, WR9760, WR9740, WR9735, WR9725, WR9870, WR9860, WR9840	27
Mowers	**31**
Disc Mower and Conditioner Product Information	32
1386 Disc Mower Conditioner	33
1383 Disc Mower Conditioner	34
1366 Disc Mower Conditioner	35
1363 Disc Mower Conditioner	36
1359 Disc Mower Conditioner	37
Front and Rear Mower Conditioner Product Information	38
DM1398 Disc Mower Conditioner	39
DM1340 Disc Mower Conditioner	40
Farmer and Professional Disc Mower Product Information	41
DM1305 Farmer Series Disc Mower	42
DM1306 Farmer Series Disc Mower	42
DM1308 Farmer Series Disc Mower	42
DM1309 Farmer Series Disc Mower	42
DM1358 Professional Series Disc Mower	43
DM1361 Professional Series Disc Mower	43
DM1362 Professional Series Disc Mower	43

TABLE OF CONTENTS

PAGE

Rakes and Tedders **44**
- V Rakes - 1508 / 1510 / 1512 . . . 45
- V + Y Rake - SV410. . . . 46
- Hi-Capacity Bi-Fold Wheel Rakes - 3983 / 3986 / 3995 . . . 47
- 5130 Heavy Duty Wheel Rake . . . 48
- RK Series Rotary Rakes - RK3802 / RK3814 / RK3845 / RK3855 / RK3879 PRO . . . 49
- TD Series Hi- Capacity Tedders - TD1620 / TD1635 / TD1648 / TD1658 / TD1655 / TD1665 . . . 51

Round Balers **52**
- Round Baler Product Information . . . 53
- 2956A Round Baler . . . 54
- 2956 Round Baler . . . 56
- 2946A Round Baler . . . 58
- 2946 Round Baler . . . 60
- 1734 Round Baler . . . 62
- 1745 Round Baler . . . 63
- AGCO Hay Preservative and Application Equipment . . . 84

Small / Medium Rectangular Balers **64**
- Small / Medium Rectangular Baler Product Information . . . 65
- 1844S / 1844N Medium Rectangular Baler . . . 66
- 1841 Medium Rectangular Baler . . . 67
- 1840 Small Rectangular Baler . . . 68
- 1838 Small Rectangular Baler . . . 69
- 1836 Small Rectangular Baler . . . 70
- AGCO Hay Preservative and Application Equipment . . . 84

Large Rectangular Balers **72**
- Large Rectangular Baler Product Information . . . 73
- 2290 Large Rectangular Baler . . . 74
- 2270 Large Rectangular Baler . . . 76
- 2270XD Large Rectangular Baler . . . 78
- 2250 Large Rectangular Baler . . . 80
- AC25 Bale Accumulator for 2290, 2270 and 2270XD . . . 82
- AC20 Bale Accumulator for 2250 . . . 83
- AGCO Hay Preservative and Application Equipment . . . 84

TABLE OF CONTENTS

PAGE

Forage **86**
7515 Forage Blower 87

Waste Handling **88**
Heavy Duty Manure Spreaders
SP3710 Manure Spreader 89
SP3714 Manure Spreader 89
SP3717 Manure Spreader 89
SP3719 Manure Spreader 90
SP3724 Manure Spreader 90
SP3728 Manure Spreader 90
SP3735 Manure Spreader 91
SP3748 Manure Spreader 91

Hydra-Push Spreaders
HY3730 Manure Spreader 92
HY3744 Manure Spreader 92

Top Shot Spreaders
VB3726 Manure Spreader 93
VB3734 Manure Spreader 93
VB3744 Manure Spreader 93
VB3755 Manure Spreader 93

Non-Current **95**
5200 Center Delivery & Shiftable Draper Headers 96
for WR9770, WR9760, WR9740, WR9735, WR9725, WR9870, WR9860, WR9840
Non-Current Kits 98

Referral Attachments **103**

HESSTON by MASSEY FERGUSON

NEW FARM EQUIPMENT WARRANTY

Product	Warranty Terms
Hay and Forage	**Basic Warranty** : 12 Months, Hours Unlimited
Round Balers	**Basic Warranty :** 24 Months, Hours Unlimited
SP Windrowers	**Engine Warranty:**
	AGCO Power™ - 2 years or 2000 Hours
	CUMMINS Engine - 2 years or 2000 Hours *Warranty Service must be performed at an authorized CUMMINS dealership
SP Windrower Headers	**Auger, Disc and Draper Header Warranty:** 1 year, Hours Unlimited
Coverage: Parts and labor at servicing dealer locations	

Product	Warranty Terms
RazorBar Equipped Heads & Mowers Plus the 1359, 1372 & 1375	**RazorGuard Warranty :** 3 years, Hours Unlimited, Parts Only Items covered: Module Casting, Idler Bearings & Idler Gears, Gear Spindles & Assembly, Spindle Bearings, Seals

SELF-PROPELLED WINDROWERS

Mississippi State Contract Discount: 10%

9800 SERIES SELF-PROPELLED WINDROWER

FOB Hesston, KS

PRODUCT INFORMATION

TRACTOR	WR9870	WR9860	WR9840
Horsepower Rated Horsepower Boost	225 (168 KW) 240 (179 KW)	195 (145 KW) 208 (155 KW)	137 (102 KW) 148 (110 KW)
Header Option	All	All	Draper or Sickle
Drive Tires (STD) Tread	23.1R26 Turf Radial 23.1 x 26 Turf 620/75R26 Bar	23.1R26 Turf Radial 23.1 x 26 Turf 620/75R26 Bar	18.4 x 26 Turf 18.4R26 Bar 23.1 x 26 Turf 23.1R26 Turf 620/75R26 Bar
Fuel Capacity	130 Gal (492 L)	130 Gal (492 L)	130 Gal (492 L)
Cab	Deluxe	Deluxe	Deluxe
HEADER			
Drive	Hydraulic	Hydraulic	Hydraulic
Flotation	Hydraulic	Hydraulic	Hydraulic

HEADER APPLICATIONS

Hay Headers:			
9183 Disc (13 ft)	X	X	
9186 Disc (13 ft)	X	X	
9195 Disc (16 ft)	X	X	
9196 Disc (16 ft)	X	X	
9146 Sickle (14 ft)	X	X	X
9146 Sickle (16 ft)	X	X	X
9126 Sickle (14 ft)	X	X	X
9126 Sickle (16 ft)	X	X	X
9126 Sickle (18 ft)	X	X	X
Draper Headers:			
5300 Center Delivery (20', 25', 30', 35', 40')	X	X	X
5300 Shiftable (25', 30', 35', 40')	X	X	X

NOTE: This is a general sales guide; for further product details and official specifications refer to product information guides and product literature.

Mississippi State Contract Discount: 10%

HESSTON by MASSEY FERGUSON

WR9870 SELF-PROPELLED WINDROWER

FOB Hesston, KS

STANDARD EQUIPMENT

AGCO Power™ Turbo-Charged and Intercooled Diesel 6.6 CTA
SCR Emissions Control System
6.6 Liter. - 225 HP 6 Cylinder Engine (240 Boost HP)
Variable Speed Ground Drive Motors
Electronically Actuated Parking Lock
High Capacity Electronically Controlled Header Drive Pump with Reverser
Automatic Header Safety Lock
Hydraulic Header Tilt
Precision AutoSteering™ Ready
Electro-Hydraulic Steering
Adjustable Steering Sensitivity
Adjustable Rear Axle Casters
GlideRider™ Suspended Rear Axle
22 mph High Speed Ground Drive
V-Cool™ Hydraulic Auto-Cleaning and Cooling Package
Integrated C1000 Color Monitor
Two Large External Rear View Mirrors
Large Deluxe Cab with Air Conditioner and Heater
Tilt and Telescoping Adjustable Steering Column
High Back Air Suspension Seat
Instructor Seat
Ground Level Maintenance
12-Volt Electrical System
130 Gallon Fuel Tank
Integrated Horn
AM/FM, CD, MP3 with Weatherband Radio (Satellite Ready) (Antenna Not Included)

Order Code	Catalog Number	Description	Approx. Weight(lb)	List Price
		ONE ITEM FROM EACH GROUP MUST BE SPECIFIED UNLESS NOTED OTHERWISE		
BASE MACHINE				**GROUP 01**
MFWR9870	700960402	WR9870 Self Propelled Windrower		129,274.00
UPGRADE PACKAGE				**GROUP 02**
	MKT0310	Upgrade Package Includes: Deluxe Wide Air Suspended Cab; Automatic Climate Control; Semi-Active Seat, Gray Fabric with Stitching; Leather Side Bolsters, Heating and Cooling		4,139.00
	MKT0351	Upgrade Package Includes: Windshield Wiper; Reel Fore/Aft; Rear Hitch for Rollers; Rear End Counterbalance Weight; Quick Connect Coupler- Single Point (Required for 5300 Header); Adapter Kit Draper/Auger Header		3,689.00
CAB OPTIONS				**GROUP 03**
20-UC03	700960837	Deluxe Rigid Mount Cab		**In Base**
20-UC02	700960836	Deluxe Wide Air Suspended Cab		1,563.00
CAB CLIMATE CONTROLS				**GROUP 04**
30-AQ02	700957385	Manual Climate Control		**In Base**
30-AQ04	700956913	Automatic Climate Control		788.00
QUICK COUPLERS				**GROUP 05**
60-GC01	700962037	Less Quick Couplers		In Base
60-GC02	700962038	Quick Couplers - Individual		324.00
60-GC03	700962039	Quick Connect Coupler- Single Point (Required for 5300 Header - Adaptable for Rotary Headers)		638.00

Dealers are Required to have EDT Tool Before ordering WR Windrowers.

WR9870 SELF-PROPELLED WINDROWER

Order Code	Catalog Number	Description	Approx. Weight(lb)	List Price
TIRE OPTIONS				**GROUP 10**
75-S106	700956981	23.1 x 26 Bias Turf Tires with 14L x 16.1 Rear		5,396.00
75-S116	700958655	23.1 x 26 Bias Turf Tires with 16.5L x 16.1 Rear		6,381.00
75-S117	700958066	23.1R26 Turf Radial Tires with 16.5L x 16.1 Rear		8,122.00
75-S119	700960032	620/75R26 Radial Bar (Alliance) with 16.5L x 16.1 Rear		10,381.00
75-S118	700960033	620/75R26 Radial Bar (Michelin) with 16.5L x 16.1 Rear		11,419.00
SEAT				**GROUP 11**
35-AE10	700960838	High Back Air Suspension Seat, Gray Fabric with Stitching		**In Base**
35-AE14	700960840	Semi-Active Seat, Gray Fabric with Stitching, Leather Side Bolsters, Heating and Cooling		1,788.00
FACTORY INSTALLED AUTO-GUIDE™ 3000 AUTO-STEERING (OPTIONAL)				**GROUP 12**
70-XR19	700960383	Auto-Guide™ 3000 **Sub-Meter** Accuracy Auto-Steering System (Includes: Roof Plate, Remote Antenna, and Pigtail Harness) Displays in Existing C1000 Monitor or C3000 Monitor		6,035.00
70-XR21	700961339	Auto-Guide™ 3000 **Decimeter** Accuracy Auto-Steering System (Includes: Roof Plate, Remote Antenna, and Pigtail Harness) Displays in Existing C1000 Monitor or C3000 Monitor		8,295.00
15-VP01	700961318	C3000 Monitor Upgrade for Auto-Guide™ 3000 System Includes: Monitor, Harness and Mount		4,682.00

*Windrower must be factory ordered with an Auto-Guide™ 3000 Guidance System to upgrade to a C3000 monitor.

FACTORY INSTALLED TELEMETRY (OPTIONAL)				**GROUP 13**
65-TE01	700958139	AGCOMMAND (Std Plus)		2,443.00

For Technology options and upgrades, see the Technology section.

HESSTON by MASSEY FERGUSON

WR9870 SELF-PROPELLED WINDROWER

Order Code	Catalog Number	Description	Approx. Weight(lb)	List Price
FIELD INSTALLED KITS - (order as desired)				**GROUP 99**
	700959233M	Windshield Wiper Kit		890.00
	700960626M	Beacon Light Kit		332.00
	700958144M	Tractor Coupler Kit		500.00
	700958145M	Header Coupler Kit		500.00
	700961624M	Tractor Single Point Quick Coupler Kit		673.00
	700961622M	Header Single Point Quick Coupler Kit		587.00
	700958054M	Double Windrow Attachment Kit (Requires Auxiliary Hydraulic Kit - 700958059M)		10,811.00
	700958059M	Auxiliary Hydraulic Kit		2,176.00
	700959625M	Rear Hitch Kit for Rollers		129.00
	700958068M	DWA Tripler Kit		3,488.00
	700958061M	Offset Tail Wheel Kit		4,334.00
	700959300M	Cab Suspension Air Compressor		571.00
	700959707M	Reel - Fore/Aft Tractor		194.00
	700959709M	Adapter Kit Draper/Auger Header		960.00
	700958138M	AGCOMMAND Standard Plus Installation Kit		2,946.00
	700960387M	AG3000 Autoguide Mounting Kit		346.00
	700961695M	Auxiliary Hose Kit (Requires Auxiliary Hydraulic Kit (700958059M) to install)		919.00
	700961626M	Rear End Counterbalance Weight Kit		914.00
	71428520M	Ship Safe Preservative Coating (Factory Applied) (Recommended for shipments occurring in November through March 31ST)		586.00
ORDER FROM PARTS				
	700959626	Field Light Kit		ORDER FROM PARTS
	700960620	Satellite Radio Antenna		ORDER FROM PARTS
	700961323	French Operators Manual and Decal Kit	2	No Charge
	700961327	Spanish Operators Manual and Decal Kit	2	No Charge

NOTE: Coupler Kits And Easy Attach Header An-gle Kits Are Not Required, But Make Header Attachment Easier.

Mississippi State Contract Discount: 10%

HESSTON by MASSEY FERGUSON

WR9860 SELF-PROPELLED WINDROWER

FOB Hesston, KS

STANDARD EQUIPMENT

AGCO Power™ Turbo-charged and Intercooled Diesel 4.9 CTA
SCR Emissions Control System
4.9 Liter. - 195 HP QuadBoost™ 4 cylinder Engine (208 Boost HP)
Variable Speed Ground Drive Motors
Electronically Actuated Parking Lock
High Capacity Electronically Controlled Header Drive Pump with Reverser
Automatic Header Safety Lock
Hydraulic Header Tilt
Precision AutoSteering™ Ready
Electro-Hydraulic Steering
Adjustable Steering Sensitivity
Adjustable Rear Axle Casters
22 mph High Speed Ground Drive
V-Cool™ Hydraulic Auto-Cleaning and Cooling Package
Integrated C1000 Color Monitor
Two Large External Rear View Mirrors
Large Deluxe Cab with Air Conditioner and Heater
Tilt and telescoping Adjustable Steering Column
High Back Air Suspension Seat
Instructor Seat
Ground Level Maintenance
12-Volt Electrical System
130 Gallon Fuel Tank
Integrated Horn
AM/FM, CD, MP3 with Weatherband Radio (Satellite Ready) (Antenna Not Included)

ONE ITEM FROM EACH GROUP MUST BE SPECIFIED UNLESS NOTED OTHERWISE

Order Code	Catalog Number	Description	Approx. Weight(lb)	List Price
BASE MACHINE				**GROUP 01**
MFWR9860	700960404	WR9860 Self Propelled Windrower		118,848.00
UPGRADE PACKAGE				**GROUP 02**
	MKT0311	Upgrade Package Includes: Deluxe Wide Air Suspended Cab Automatic Climate Control GlideRider™ Suspended Axle Semi-Active Seat, Gray Fabric with Stitching; Leather Side Bolsters, Heating and Cooling		6,391.00
	MKT0351	Upgrade Package Includes: Windshield Wiper Reel Fore/Aft Rear Hitch for Rollers Rear End Counterbalance Weight Quick Connect Coupler- Single Point (Required for 5300 Header) Adapter Kit Draper/Auger Header		3,689.00
CAB OPTIONS				**GROUP 03**
20-UC03	700960837	Deluxe Rigid Mount Cab		**In Base**
20-UC02	700960836	Deluxe Wide Air Suspended Cab		1,563.00
CAB CLIMATE CONTROLS				**GROUP 04**
30-AQ02	700957385	Manual Climate Control		**In Base**
30-AQ04	700956913	Automatic Climate Control		788.00
REAR AXLE				**GROUP 06**
55-EE01	700956978	Rigid Axle		**In Base**
55-EE02	700956977	GlideRider™ Suspended Axle		2,252.00

Dealers are Required to have EDT Tool Before ordering WR Windrowers.

HESSTON by MASSEY FERGUSON

WR9860 SELF-PROPELLED WINDROWER

Order Code	Catalog Number	Description	Approx. Weight(lb)	List Price
QUICK COUPLERS				**GROUP 07**
60-GC01	700962037	Less Quick Couplers		In Base
60-GC02	700962038	Quick Couplers - Individual		324.00
60-GC03	700962039	Quick Connect Coupler- Single Point (Required for 5300 Header - Adaptable for Rotary Headers)		638.00
TIRE OPTIONS				**GROUP 08**
75-S106	700956981	23.1 x 26 Bias Turf Tires with 14L x 16.1 Rear		5,396.00
75-S116	700958655	23.1 x 26 Bias Turf Tires with 16.5L x 16.1 Rear		6,381.00
75-S117	700958066	23.1R26 Turf Radial Tires with 16.5L x 16.1 Rear		8,122.00
75-S119	700960032	620/75R26 Radial Bar (Alliance) with 16.5L x 16.1 Rear		10,381.00
75-S118	700960033	620/75R26 Radial Bar (Michelin) with 16.5L x 16.1 Rear		11,419.00
SEAT				**GROUP 09**
35-AE10	700960838	High Back Air Suspension Seat, Gray Fabric with Stitching		**In Base**
35-AE14	700960840	Semi-Active Seat, Gray Fabric with Stitching, Leather. Side Bolsters, Heating and Cooling		1,788.00
FACTORY INSTALLED AUTO-GUIDE™ 3000 AUTO-STEERING (OPTIONAL)				**GROUP 10**
70-XR19	700960383	Auto-Guide™ 3000 **Sub-Meter** Accuracy Auto-Steering System (Includes: Roof Plate, Remote Antenna, and Pigtail Harness) Displays in Existing C1000 Monitor		6,035.00
70-XR21	700961339	Auto-Guide™ 3000 **Decimeter** Accuracy Auto-Steering System (Includes: Roof Plate, Remote Antenna, and Pigtail Harness) Displays in Existing C1000 Monitor		8,295.00
15-VP01	700961318	C3000 Monitor Upgrade for Auto-Guide™ 3000 System Includes: Monitor, Harness and Mount		4,682.00

*Windrower must be factory ordered with an Auto-Guide™ 3000 Guidance System to upgrade to a C3000 monitor.

FACTORY INSTALLED TELEMETRY - OPTIONAL				**GROUP 11**
65-TE01	700958139	AGCOMMAND (Std Plus)		2,443.00

For Technology options and upgrades, see the Technology section.

Mississippi State Contract Discount: 10%

HESSTON by MASSEY FERGUSON

WR9860 SELF-PROPELLED WINDROWER

Order Code	Catalog Number	Description	Approx. Weight(lb)	List Price
FIELD INSTALLED KITS - (order as desired)				**GROUP 99**
	700959233M	Windshield Wiper Kit		890.00
	700960626M	Beacon Light Kit		332.00
	700958144M	Tractor Coupler Kit		500.00
	700958145M	Header Coupler Kit		500.00
	700961624M	Tractor Single Point Quick Coupler Kit		673.00
	700961622M	Header Single Point Quick Coupler Kit		587.00
	700958054M	Double Windrow Attachment Kit (Requires Auxiliary Hydraulic Kit - 700958059M)		10,811.00
	700958059M	Auxiliary Hydraulic Kit		2,176.00
	700959625M	Rear Hitch Kit for Rollers		129.00
	700958068M	DWA Tripler Kit		3,488.00
	700958061M	Offset Tail Wheel Kit		4,334.00
	700959300M	Cab Suspension Air Compressor		571.00
	700959707M	Reel - Fore/Aft Tractor		194.00
	700959709M	Adapter Kit Draper/Auger Header		960.00
	700958138M	AGCOMMAND Standard Plus Installation Kit		2,946.00
	700960387M	AG3000 Autoguide Mounting Kit		346.00
	700961695M	Auxiliary Hose Kit (Requires Auxiliary Hydraulic Kit (700958059M) to install)		919.00
	700961626M	Rear End Counterbalance Weight Kit		914.00
	71428520M	Ship Safe Preservative Coating (Factory Applied) (Recommended for shipments occurring in November through March 31ST)		586.00
ORDER FROM PARTS				
	700959626	Field Light Kit	ORDER FROM PARTS	
	700960620	Satellite Radio Antenna	ORDER FROM PARTS	
	700961323	French Operators Manual and Decal Kit.	2	No Charge
	700961327	Spanish Operators Manual and Decal Kit	2	No Charge

NOTE: Coupler Kits And Easy Attach Header Angle Kits Are Not Required, But Make Header Attachment Easier.

Mississippi State Contract Discount: 10%

HESSTON by MASSEY FERGUSON

WR9840 SELF-PROPELLED WINDROWER

FOB Hesston, KS

STANDARD EQUIPMENT

AGCO Power™ Turbo-charged and Intercooled Diesel 4.9 CTA
SCR Emissions Control System
4.9 Liter. – 137 HP 4 Cylinder Engine (148 Boost HP)
Electronically Actuated Parking Lock
High Capacity Electronically Controlled Header Drive Pump with Reverser
Automatic Header Safety Lock
Hydraulic Header Tilt
Electro-Hydraulic Steering
Adjustable Steering Sensitivity
Adjustable Rear Axle Casters
Variable Speed Ground Drive Motors
Hydraulic Wheel Motor Shields
High Lift Links
V-Cool™ Hydraulic Auto-Cleaning and Cooling Package
Integrated C1000 Color Monitor
Two Large External Rear View Mirrors
Large Deluxe Cab with Air Conditioner and Heater
Tilt and Telescoping Adjustable Steering Column
High Back Air Suspension Seat
Instructor Seat
Ground Level Maintenance
12-Volt Electrical System
130 Gallon Fuel Tank
AM/FM, CD, MP3 with Weatherband Radio (Satellite Ready) (Antenna Not Included)

Order Code	Catalog Number	Description	Approx. Weight(lb)	List Price
ONE ITEM FROM EACH GROUP MUST BE SPECIFIED UNLESS NOTED OTHERWISE				
BASE MACHINE				**GROUP 01**
MFWR9840	700961077	WR9840 Self Propelled Windrower		105,212.00
UPGRADE PACKAGE				**GROUP 02**
	MKT0352	Deluxe Package Includes:		6,391.00
		Deluxe Wide Air Suspended Cab		
		Automatic Climate Control		
		GlideRider™ Suspended Axle		
		Semi-Active Seat, Gray Fabric with Stitching, Leather Side Bolsters, Heating and Cooling		
	MKT0353	Premium Package Includes:		9,120.00
		Deluxe Wide Air Suspended Cab		
		Automatic Climate Control		
		GlideRider™ Suspended Axle		
		Semi-Active Seat, Gray Fabric with Stitching, Leather Side Bolsters, Heating and Cooling		
		Quick Connect Coupler- Single Point (Required for 5300 Header)		
		Windshield Wiper		
		Rear Hitch for Rollers		
		Rear End Counterbalance Weight		
		Reel Fore/Aft		

Dealers are Required to have EDT Tool Before ordering WR Windrowers.

HESSTON by MASSEY FERGUSON

WR9840 SELF-PROPELLED WINDROWER

Order Code	Catalog Number	Description	Approx. Weight(lb)	List Price
TIRE OPTIONS				**GROUP 07**
75-S109	700958380	18.4 x 26 Bias Turf Tires with 14L x 16.1 Rear		3,734.00
75-S111	700958075	18.4R26 Bar with 14L x 16.1 Rear		4,931.00
75-S106	700956981	23.1 x 26 Bias Turf Tires with 14L x 16.1 Rear		5,396.00
75-S116	700958655	23.1 x 26 Turf Tires with 16.5L x 16.1 Rear		6,381.00
75-S117	700958066	23.1R26 Turf Radial Tires with 16.5L x 16.1 Rear		8,122.00
75-S119	700960032	620/75R26 Radial Bar (Alliance) with 16.5L x 16.1 Rear		10,381.00
75-S118	700960033	620/75R26 Radial Bar (Michelin) with 16.5L x 16.1 Rear		11,419.00
FACTORY INSTALLED AUTO-GUIDE™ 3000 AUTO-STEERING (OPTIONAL)				**GROUP 09**
70-XR19	700960383	Auto-Guide™ 3000 **Sub-Meter** Accuracy Auto-Steering System (Includes: Roof Plate, Remote Antenna, and Pigtail Harness) Displays in Existing C1000 Monitor		6,035.00
70-XR21	700961339	Auto-Guide™ 3000 **Decimeter** Accuracy Auto-Steering System (Includes: Roof Plate, Remote Antenna, and Pigtail Harness) Displays in Existing C1000 Monitor		8,295.00
15-VP01	700961318	C3000 Monitor Upgrade for Auto-Guide™ 3000 System Includes: Monitor, Harness and Mount		4,682.00

*Windrower must be factory ordered with an Auto-Guide™ 3000 Guidance System to upgrade to a C3000 monitor.

FACTORY INSTALLED TELEMETRY (OPTIONAL)				**GROUP 10**
65-TE01	700958139	AGCOMMAND (Std Plus)		2,443.00

For Technology options and upgrades, see the Technology section.

HESSTON by MASSEY FERGUSON

WR9840 SELF-PROPELLED WINDROWER

Order Code	Catalog Number	Description	Approx. Weight(lb)	List Price
FIELD INSTALLED KITS - (order as desired)				**GROUP 99**
	700959233M	Windshield Wiper Kit		890.00
	700960626M	Beacon Light Kit		332.00
	700958144M	Tractor Coupler Kit		500.00
	700958145M	Header Coupler Kit		500.00
	700961624M	Tractor Single Point Quick Coupler Kit		673.00
	700961622M	Header Single Point Quick Coupler Kit		587.00
	700958054M	Double Windrow Attachment Kit (Requires Auxiliary Hydraulic Kit - 700958059M)		10,811.00
	700958059M	Auxiliary Hydraulic Kit		2,176.00
	700959625M	Rear Hitch Kit for Rollers		129.00
	700958068M	DWA Tripler Kit		3,488.00
	700958061M	Offset Tail Wheel Kit		4,334.00
	700959300M	Cab Suspension Air Compressor		571.00
	700959707M	Reel - Fore/Aft Tractor		194.00
	700958138M	AGCOMMAND Standard Plus Installation Kit		2,946.00
	700960387M	AG3000 Autoguide Mounting Kit		346.00
	700961695M	Auxiliary Hose Kit (Requires Auxiliary Hydraulic Kit (700958059M) to install)		919.00
	700961626M	Rear End Counterbalance Weight Kit		914.00
	71428520M	Ship Safe Preservative Coating (Factory Applied) (Recommended for shipments occurring in November through March 31ST)		586.00
ORDER FROM PARTS				
	700959626	Field Light Kit		ORDER FROM PARTS
	700960620	Satellite Radio Antenna		ORDER FROM PARTS
	700961323	French Operators Manual and Decal Kit	2	No Charge
	700961324	Spanish Operators Manual and Decal Kit	2	No Charge

NOTE: Coupler Kits And Easy Attach Header An-gle Kits Are Not Required, But Make Header Attachment Easier.

Mississippi State Contract Discount: 10%

HESSTON by MASSEY FERGUSON

WR9740 SELF-PROPELLED WINDROWER

FOB Hesston, KS

STANDARD EQUIPMENT

AGCO Power™ Turbo-charged and Intercooled Diesel 4.9 CTA
SCR Emissions Control System
4.9 Liter. – 137 HP 4 Cylinder Engine
2-Speed Ground Drive Motors
Electronically Actuated Parking Lock
High Capacity Electronically Controlled Header Drive Pump with Reverser
Automatic Header Safety Lock
Hydraulic Header Tilt
Topcon Precision AutoSteering™ Ready
Electro-Hydraulic Steering
Adjustable Steering Sensitivity
Adjustable Rear Axle Casters
V-Cool™ Hydraulic Auto-Cleaning and Cooling Package
Integrated C1000 Color Monitor
Two Large External Rear View Mirrors
Large Deluxe Cab with Air Conditioner and Heater
Tilt and Telescoping Adjustable Steering Column
High Back Air Suspension Seat
Instructor Seat
Ground Level Maintenance
12-Volt Electrical System
130 Gallon Fuel Tank
AM/FM, CD, MP3 with Weatherband Radio (Satellite Ready) (Antenna Not Included)

Order Code	Catalog Number	Description	Approx. Weight(lb)	List Price
		ONE ITEM FROM EACH GROUP MUST BE SPECIFIED UNLESS NOTED OTHERWISE		
BASE MACHINE				**GROUP 01**
MFWR9740	700960554YF	WR9740 Self Propelled Windrower (Model Year 2015) . . .		98,214.00
UPGRADE PACKAGE				**GROUP 02**
	MKT0312	Upgrade Package Includes: . . . . . Deluxe Wide Air Suspended Cab; Automatic Climate Control; High Speed Transport; GlideRider™ Suspended Axle; Semi-Active Seat, Gray Fabric with Stitching; Leather Side Bolsters, Heating and Cooling		9,123.00
	MKT0315	Grain Swathing Package Includes: . . . . . Windshield Wiper Kit; Tractor Coupler Kit; Reel- Fore/Aft Tractor Kit		1,584.00
CAB OPTIONS				**GROUP 03**
20-UC03	700961337	Deluxe Rigid Mount Cab		**In Base**
20-UC02	700961336	Deluxe Wide Air Suspended Cab		1,563.00
CAB CLIMATE CONTROLS				**GROUP 04**
30-AQ02	700957385	Manual Climate Control		**In Base**
30-AQ04	700956913	Automatic Climate Control		788.00
GROUND DRIVE				**GROUP 05**
50-D013	700958095	Standard Speed Transport		**In Base**
50-D014	700958096	High Speed Transport		2,732.00
REAR AXLE				**GROUP 06**
55-EE01	700956978	Rigid Axle		**In Base**
55-EE02	700956977	GlideRider™ Suspended Axle		2,252.00

SUBJECT TO AVAILABILITY

Dealers are Required to have EDT Tool Before ordering WR Windrowers.

HESSTON by MASSEY FERGUSON

WR9740 SELF-PROPELLED WINDROWER

Order Code	Catalog Number	Description	Approx. Weight(lb)	List Price
TIRE OPTIONS				**GROUP 07**
75-S109	700958380	18.4 x 26 Bias Turf Tires with 14L x 16.1 Rear		3,734.00
75-S111	700958075	18.4R26 Bar with 14L x 16.1 Rear		4,931.00
75-S106	700956981	23.1 x 26 Bias Turf Tires with 14L x 16.1 Rear		5,396.00
75-S116	700958655	23.1R26 Turf Tires with 16.5L x 16.1 Rear		6,381.00
75-S117	700958066	23.1R26 Turf Radial Tires with 16.5L x 16.1 Rear		8,122.00
75-S119	700960032	620/75R26 Radial Bar (Alliance) with 16.5L x 16.1 Rear		10,381.00
75-S118	700960033	620/75R26 Radial Bar (Michelin) with 16.5L x 16.1 Rear		11,419.00
SEAT				**GROUP 08**
35-AE10	700958091	High Back Air Suspension Seat, Gray Fabric with Stitching		**In Base**
35-AE14	700958093	Semi-Active Seat, Gray Fabric with Stitching, Leather Side Bolsters, Heating and Cooling		1,788.00
FACTORY INSTALLED AUTO-GUIDE™ 3000 AUTO-STEERING (OPTIONAL)				**GROUP 09**
70-XR19	700960383	Auto-Guide™ 3000 **Sub-Meter** Accuracy Auto-Steering System (Includes: Roof Plate, Remote Antenna, and Pigtail Harness) Displays in Existing C1000 Monitor		6,035.00
70-XR21	700961339	Auto-Guide™ 3000 **Decimeter** Accuracy Auto-Steering System (Includes: Roof Plate, Remote Antenna, and Pigtail Harness) Displays in Existing C1000 Monitor		8,295.00
15-VP01	700961318	C3000 Monitor Upgrade for Auto-Guide™ 3000 System Includes: Monitor, Harness and Mount		4,682.00

*Windrower must be factory ordered with an Auto-Guide™ 3000 Guidance System to upgrade to a C3000 monitor.

FACTORY INSTALLED TELEMETRY (OPTIONAL)				**GROUP 10**
65-TE01	700958139	AGCOMMAND (Std Plus)		2,443.00

For Technology options and upgrades, see the Technology section.

SUBJECT TO AVAILABILITY

HESSTON by MASSEY FERGUSON

WR9740 SELF-PROPELLED WINDROWER

Order Code	Catalog Number	Description	Approx. Weight(lb)	List Price
FIELD INSTALLED KITS - (order as desired)				**GROUP 99**
	700959233M	Windshield Wiper Kit		890.00
	700960626M	Beacon Light Kit		332.00
	700958144M	Tractor Coupler Kit		500.00
	700958145M	Header Coupler Kit		500.00
	700958054M	Double Windrow Attachment Kit (Requires Auxiliary Hydraulic Kit - 700958059M)		10,811.00
	700959625M	Rear Hitch Kit for Rollers		129.00
	700958059M	Auxiliary Hydraulic Kit		2,176.00
	700958061M	Offset Tail Wheel Kit		4,334.00
	700959300M	Cab Suspension Air Compressor		571.00
	700959065M	Easy Attach Header Angle Kit		83.00
	700959707M	Reel - Fore/Aft Tractor		194.00
	700958138M	AGCOMMAND Standard Plus Installation Kit		2,946.00
	700958068M	DWA Tripler Kit		3,488.00
	700961621M	Single Point Quick Coupler Kit (Requires Update Package 700961620M)		709.00
	700960387M	AG3000 Autoguide Mounting Kit - For Wide Cab		346.00
	71428520M	Ship Safe Preservative Coating (Factory Applied) (Recommended for shipments occurring in November through March 31ST)		586.00
ORDER FROM PARTS				
	700959626	Field Light Kit	ORDER FROM PARTS	
	700960051	Horn Kit	ORDER FROM PARTS	
	700960620	Satellite Radio Antenna	ORDER FROM PARTS	
	700960129	French Operators Manual and Decal Kit	2	No Charge
	700960130	Spanish Operators Manual and Decal Kit	2	No Charge

NOTE: Coupler Kits And Easy Attach Header An-gle Kits Are Not Required, But Make Header Attachment Easier.

SUBJECT TO AVAILABILITY

The Following Items are Required to Mount a 5300 Draper Header to a WR9700 Windrower:

- WR9700 Main Controller Software Verison 1.4.0 and VT Software 1.3.0 or later.
- Single Point Quick Coupler Kit (700961621M)
- Update Package (700961620M)
- High Pressure Auxiliary Manifold Relief Valve (700748026 from parts)
- Rear End Counterbalance Weight Kit (700961626M)

HEADERS

Mississippi State Contract Discount: 10%

HESSTON by MASSEY FERGUSON

9195 ROTARY HEADER

for WR9770, WR9760, WR9870, WR9860

FOB Hesston, KS

STANDARD EQUIPMENT

16' (4.9m) Cutting Width
10 Discs (2500 RPM)
20 Knives (2 per disc), Swing-away, Reversible
3/4" to 3" (0m to .1m) Cutting Height
RazorBar Cast Modular Cutterbar
Modular Spur Gear Cutterbed Design
Turbulence Reduction Roll with Incorporated Augers
Dual Hydraulic Drive Motors
Hydraulic Roll Tension
Hay Conditioner Rolls:
- 2 Herringbone Steel on Steel Rolls
- Length - 110" (2.8m)
- Roll Speed - 1290 RPM

Two Adjustable Skid Shoes
Smooth Center Split Rock Guards
Top Shield Protector

Order Code	Catalog Number	Description	Approx. Weight(lb)	List Price
		ONE ITEM FROM EACH GROUP MUST BE SPECIFIED UNLESS NOTED OTHERWISE		
BASE MACHINE				**GROUP 01**
MF9195	700959166YF	9195 16' (4.9m) Rotary Header		38,169.00
TOP SHIELD PROTECTOR				**GROUP 02**
65-D210	700957389	Top Shield Protector		**In Base**
FIELD INSTALLED KITS - (order as desired)				**GROUP 99**
	MK11284	Electric Swathboard Actuator Kit	35	835.00
	MK11285	Steel Gauge Wheels	140	846.00
	700958746M	Filler Pan Kit For use with DWA to close the gap between the Cutterbar and the Front "Helper" Roll.		139.00
	700958144M	Tractor Coupler Kit	30	500.00
	700958145M	Header Coupler Kit *	30	500.00
	700961622M	Header Single Point Quick Coupler Kit		587.00
	700961692M	Hydraulic Assist Kit		851.00
	71428520M	Ship Safe Preservative Coating (Factory Applied) (Recommended for shipments occurring in November through March 31ST)		586.00
ORDER FROM PARTS				
	700736450	French Operators Manual and Decal Kit	2	No Charge
	700736451	Spanish Operators Manual and Decal Kit	2	No Charge

***NOTE: Header Coupler Kits Are Not Required, But Make Header Attachment Easier.**

Mississippi State Contract Discount: 10%

9196 ROTARY HEADER

for WR9770, WR9760, WR9870, WR9860

FOB Hesston, KS

STANDARD EQUIPMENT

16' (4.9m) Twin Max Conditioner Disc Header

RazorBar Cast Modular Cutter Bar
Smooth Center Split Rock Guard
10 Discs (2500 RPM)
20 Knives (2 per disc), Swing-away, Reversible
3/4" to 3" (0m to .1m) Cutting Height
Modular Spur Gear Cutterbed Design
Turbulence Reduction Roll with Incorporated Augers
Dual Hydraulic Drive Motors
Two Adjustable Skid Shoes
Hay Conditioner Rolls:
4 Herringbone Steel on Steel Conditioning Rollers
Length - 110" (2.8m)
Roll Speed - 1290 RPM
Hydraulic Roll Tension
Top Shield Protector

Order Code	Catalog Number	Description	Approx. Weight(lb)	List Price
		ONE ITEM FROM EACH GROUP MUST BE SPECIFIED UNLESS NOTED OTHERWISE		
BASE MACHINE				**GROUP 01**
MF9196	700959172YF	9196 16' (4.9m) Rotary Header	4535	47,276.00
TOP SHIELD PROTECTOR				**GROUP 02**
65-D210	700957389	Top Shield Protector		**In Base**
FIELD INSTALLED KITS - (order as desired)				**GROUP 99**
	MK11284	Electric Swathboard Actuator Kit	35	835.00
	MK11285	Steel Gauge Wheels (For use with 16' Rotary Headers) . .	140	846.00
	700958746M	Filler Pan Kit . . . . . For use with DWA to Close the Gap between the Cutterbar and the Front "Helper" Roll		139.00
.	700958144M	Tractor Coupler Kit	30	500.00
	700958145M	Header Coupler Kit*	30	500.00
	700961622M	Header Single Point Quick Coupler Kit		587.00
	700961692M	Hydraulic Assist Kit		851.00
	71428520M	Ship Safe Preservative Coating (Factory Applied) . . . . . (Recommended for shipments occurring in November through March 31ST)		586.00
ORDER FROM PARTS				
	700736450	French Operators Manual and Decal Kit.	2	No Charge
	700736451	Spanish Operators Manual and Decal Kit.	2	No Charge

***NOTE: Header Coupler Kits Are Not Required, But Make Header Attachment Easier.**

Mississippi State Contract Discount: 10%

HESSTON by MASSEY FERGUSON

9186 ROTARY HEADER

for WR9770, WR9760, WR9870, WR9860

FOB Hesston, KS

STANDARD EQUIPMENT

13' (4.0m) Cutting Width
10 Knives (2500 RPM) (2 per disc),
Swing-away, Reversible
3/4" to 3" (0m to .1m) Cutting Height
RazorBar Cast Modular Cutterbar
Modular Spur Gear Cutterbed Design
Turbulence Reduction Roll with Incorporated Augers
Dual Hydraulic Drive Motors
TwinMax™ Double Conditioner
Hydraulic Roll Tension
Hay Conditioner Rolls:
4 Herringbone Steel on Steel Rolls
Length - 110" (2.8m)
Roll Speed - 1290 RPM
Two Adjustable Skid Shoes
Smooth Center Split Rock Guards
Top Shield Protector

Order Code	Catalog Number	Description	Approx. Weight(lb)	List Price
		ONE ITEM FROM EACH GROUP MUST BE SPECIFIED UNLESS NOTED OTHERWISE		
BASE MACHINE				**GROUP 01**
MF9186	700960291YF	9186 13' (4.0m) Rotary Header		36,722.00
TOP SHIELD PROTECTOR				**GROUP 02**
65-D210	700958142	Top Shield Protector		**In Base**
OPTIONAL FIELD ACCESSORIES				**GROUP 99**
	MK11284	Swathboard Actuator Kit	35	835.00
	700961693M	Hydraulic Assist Kit		926.00
	700958144M	Tractor Coupler Kit		500.00
	700958145M	Header Coupler Kit		500.00
	700961622M	Header Single Point Quick Coupler Kit		587.00
	700961694M	Bio Auger Kit (Double Conditioner Only) ***9186 Rotary Header Requires:*** Bio Auger Kit (700961694M) Hydraulic Assist Kit (700961693) Filler Pan (700168224) from Parts ***WR9770, WR9760, WR98760, WR9860 Windrowers Requires:*** Aux Hose Kit (700961695M) Aux Pump Kit (700958059M)		2,369.00
	71428520M	Ship Safe Preservative Coating (Factory Applied) (Recommended for shipments occurring in November through March 31ST)		586.00
ORDER FROM PARTS				
	700741014	French Operators Manual and Decal Kit	2	No Charge
	700741012	Spanish Operators Manual and Decal Kit	2	No Charge

Mississippi State Contract Discount: 10%

9183 ROTARY HEADER

for WR9770, WR9760, WR9870, WR9860

FOB Hesston, KS

STANDARD EQUIPMENT

13' (4.0m) Cutting Width
8 Discs (2500 RPM)
16 Knives (2 per disc), Swing-away, Reversible
3/4" to 3" (0m to .1m) Cutting Height
RazorBar Cast Modular Cutterbar
Spur Gear Cutterbed Design
Herringbone Turbulence Reduction Roll
Dual Hydraulic Drive Motors
Hydraulic Roll Tension
Hay Conditioner Rolls:
- 2 Herringbone Steel on Steel Rolls
- Conditioner Roll Length - 110" (2.8m)
- Roll Speed - 1290 RPM

Smooth Center Split Rock Guards
Windrow Widths - 40" to 96" (1m to 2.4m)
Top Shield Protector

Order Code	Catalog Number	Description	Approx. Weight(lb)	List Price
		ONE ITEM FROM EACH GROUP MUST BE SPECIFIED UNLESS NOTED OTHERWISE		
BASE MACHINE				**GROUP 01**
MF9183	700960197YF	9183 13' (4.0m) Rotary Header		29,792.00
TOP SHIELD PROTECTOR				**GROUP 02**
65-D210	700958142	Top Shield Protector		**In Base**
FIELD INSTALLED KITS - (order as desired)				**GROUP 99**
	MK11284	Electric Swathboard Actuator Kit	35	835.00
	700958144M	Tractor Coupler Kit	30	500.00
	700958145M	Header Coupler Kit	30	500.00
	700961622M	Header Single Point Quick Coupler Kit		587.00
	71428520M	Ship Safe Preservative Coating (Factory Applied) (Recommended for shipments occurring in November through March 31ST)		586.00
ORDER FROM PARTS				
	700741014	French Operators Manual and Decal Kit	2	No Charge
	700741012	Spanish Operators Manual and Decal Kit	2	No Charge

Mississippi State Contract Discount: 10%

HESSTON by MASSEY FERGUSON

9146 TWINMAX AUGER HEADER

for WR9770, WR9760, WR9740, WR9735, WR9870, WR9860, WR9840

FOB Hesston, KS

STANDARD EQUIPMENT

14' (4.3m) and 16' (4.9m) TwinMax™ Double Sickle Auger Headers
Five Bat Reel
Pivoting Top Auger- 9” (.2m) Bottom Auger- 10” (.3m)
Hay Conditioners:
  4 Herringbone Steel on Steel Hay Conditioners
  Length: 110" (2.8m)
Hydraulic Tension on Front and Rear Rolls
Swath and Windrow Forming Shields
Adjustable Speed 42" (1.1m) Diameter Reel
Heavy Duty Segmented Tine Bar
Ball Bearings on Reel Tine Tubes
Auger Slip Clutch
Spare Sickle Storage
Vertical Wear Bar Guards
Adjustable Sickle Hold-Downs
Adjustable Forming Shields
Adjustable Lean Bar
Heavy Crop Reel Spiders

Order Code	Catalog Number	Description	Approx. Weight(lb)	List Price
		ONE ITEM FROM EACH GROUP MUST BE SPECIFIED UNLESS NOTED OTHERWISE		
BASE MACHINE				**GROUP 01**
MF9146	700960285YF	9146 TwinMax™ Double Sickle Auger Headers		**In Base**
WORKING WIDTH				**GROUP 02**
1-14FOOT	700958985	14' (4.3m) Advanced Double Conditioner	4100	37,050.00
1-16FOOT	700958986	16' (4.9m) Advanced Double Conditioner	4100	38,908.00
HAY CONDITIONER				**GROUP 03**
15-H203	700958944	Steel on Steel Conditioner Rollers		**In Base**
FIELD INSTALLED KITS - (order as desired)				**GROUP 99**
	MK61139	Crop Divider Kit	50	271.00
	MK61158	Electric Swathboard Actuator Kit	14	793.00
	700958145M	Header Coupler Kit*	30	500.00
	700958144M	Tractor Coupler Kit	30	500.00
	700961622M	Header Single Point Quick Coupler Kit		587.00
	71428520M	Ship Safe Preservative Coating (Factory Applied) (Recommended for shipments occurring in November through March 31ST)		586.00
ORDER FROM PARTS				
	700730477	French Operators Manual and Decal Kit	2	No Charge
	700730478	Spanish Operators Manual and Decal Kit	2	No Charge

***NOTE: Header Coupler Kits Are Not Required, But Make Header Attachment Easier.**

Mississippi State Contract Discount: 10%

HESSTON by MASSEY FERGUSON

9126 DUAL SICKLE AUGER HEADER

for WR9770, WR9760, WR9740, WR9735, WR9725, WR9870, WR9860, WR9840

FOB Hesston, KS

STANDARD EQUIPMENT

Pivoting Top Auger - 9” (.2m) Bottom Auger- 10” (.3m)
110" (2.8m) Fully Engaging Hay Conditioner
Rubber on Steel or Herringbone Steel on Steel
Hydraulic Roll Tension
Swath and Windrow Forming Shields
Adjustable Speed 42" (1.1m) Diameter Reel
Heavy Duty Segmented Tine Bar
Sealed Ball Bearings on Reel Tine Tubes
Auger Slip Clutch
Spare Sickle Storage
Vertical Wear Bar Guards
Adjustable Sickle Hold-Downs
Non-Metallic End Shields
Adjustable Lean Bar
Heavy Duty Reel
Hydraulic Drive Motor

Order Code	Catalog Number	Description	Approx. Weight(lb)	List Price
		ONE ITEM FROM EACH GROUP MUST BE SPECIFIED UNLESS NOTED OTHERWISE		
BASE MACHINE				**GROUP 01**
MF9126	700960280YF	9126 Double Sickle Auger Header	4100	30,559.00
WORKING WIDTH				**GROUP 02**
1-14FOOT	700955205	14' (4.3m) Auger Header with Reel	4100	No Charge
1-16FOOT	700955206	16' (4.3m) Auger Header with Reel	4350	1,050.00
1-18FOOT	700955207	18' (5.5m) Auger Header with Reel	4615	1,367.00
HAY CONDITIONER				**GROUP 04**
10-H203	700953198	Steel on Steel Conditioner Rollers		**In Base**
10-H201	700953197	Rubber on Steel Conditioner Rollers		No Charge
FIELD INSTALLED KITS - (order as desired)				**GROUP 99**
	MK61139	Crop Divider Kit	50	271.00
	MK61158	Electric Swathboard Actuator Kit	14	793.00
	700958145M	Header Coupler Kit*	30	500.00
	700958144M	Tractor Coupler Kit	30	500.00
	700961622M	Header Single Point Quick Coupler Kit		587.00
	71428520M	Ship Safe Preservative Coating (Factory Applied) (Recommended for shipments occurring in November through March 31ST)		586.00
ORDER FROM PARTS				
	700737185	French Operators Manual and Decal Kit	2	No Charge
	700737186	Spanish Operators Manual and Decal Kit	2	No Charge

***NOTE: Header Coupler Kits Are Not Required, But Make Header Attachment Easier.**

Mississippi State Contract Discount: 10%

MASSEY FERGUSON®

5300 DRAPER HEADER

for WR9770, WR9760, WR9740, WR9735, WR9725, WR9870, WR9860, WR9840

Primary Color; Grey

FOB Hesston, KS

STANDARD EQUIPMENT

Center Delivery Sizes: 20 ft., 25 ft., 30 ft., 35 ft., 40 ft.
Shiftable Sizes: 25 ft., 30 ft., 35 ft., 40 ft.
(Self Cleaning Slide Rails)
Schumacher Hydrostatic Double Knife Drive
Gearbox 1460 Strokes per Minute (730 rpm)
Rubberized Drapers with Reinforcing Slats
Drapers: Hydrostatically Driven with In-Cab Speed Control
Swath Opening: 78.5“ (2.0m) Center and Side Delivery Position
Double Heat Treated, Extended Tang Sickle Guard
Heavy Duty Knife Guards and Adjustable Hold Downs
Reel and Draper Belts Installed from Factory
Header Single Point Quick Connect Kit
Heavy Duty Single Piece Reel with Longer HD tines
Reel Drive: Auto Reel Speed Feature
Rubber Coated Drive Rolls with V-Guide Belt Slot
Electric Reel Fore/Aft Control
Reel Drive Gearbox (Chain-less drive)
Cutterbar Poly Skids Standard
Hydraulic Deck Shift, Inside Cab Controlled
Adjustable Draper Belt Tension

ONE ITEM FROM EACH GROUP MUST BE SPECIFIED UNLESS NOTED OTHERWISE

Order Code	Catalog Number	Description	Approx. Weight(lb)	List Price
BASE MACHINE				**GROUP 01**
MF5300-20	700962016	20' (6.1m) Draper Header		In Base
MF5300-25	700962020	25' (7.6m) Draper Header		In Base
MF5300-30	700962024	30' (9.1m) Draper Header		In Base
MF5300-35	700962028	35' (10.7m) Draper Header		In Base
MF5300-40	700962032	40' (12.2m) Draper Header (Single Piece Reel)		In Base
SINGLE / DOUBLE KNIFE (CENTER DELIVERY / DOUBLE SWATH)				**GROUP 02**
H118	700961166	20' (6.1m) Double Knife / Center Delivery		48,457.00
H117	700961347	25' (7.6m) Single Knife / Center Delivery		43,890.00
H119	700961348	25' (7.6m) Single Knife / Double Swath		45,203.00
H118	700961346	25' (7.6m) Double Knife / Center Delivery		50,016.00
H120	700961168	25' (7.6m) Double Knife / Double Swath		55,298.00
H117	700961350	30' (9.1m) Single Knife / Center Delivery		48,110.00
H119	700961351	30' (9.1m) Single Knife / Double Swath		50,091.00
H118	700961349	30' (9.1m) Double Knife / Center Delivery		51,710.00
H120	700961140	30' (9.1m) Double Knife / Double Swath		63,199.00
H118	700961352	35' (10.7m) Double Knife / Center Delivery		60,890.00
H120	700961171	35' (10.7m) Double Knife / Double Swath		65,234.00
H118	700961353	40' (12.2m) Double Knife / Center Delivery		60,994.00
H120	700961172	40' (12.2m) Double Knife / Double Swath		65,585.00

MASSEY FERGUSON®

5300 DRAPER HEADER

Order Code	Catalog Number	Description	Approx. Weight(lb)	List Price
SICKLE AND GUARDS				**GROUP 03**
H511	700961145	20' (6.1m) Double Knife / Standard Sickle		No Charge
H513	700961358	20' (6.1m) Double Knife / Schumacher Sickle.		No Charge
H510	700961354	25' (7.6m) Single Knife / Standard Sickle		No Charge
H512	700961360	25' (7.6m) Single Knife / Schumacher Sickle		No Charge
H511	700961147	25' (7.6m) Double Knife / Standard Sickle		No Charge
H513	700961359	25' (7.6m) Double Knife / Schumacher Sickle.		No Charge
H510	700961355	30' (9.1m) Single Knife / Standard Sickle		No Charge
H512	700961357	30' (9.1m) Single Knife / Schumacher Sickle		No Charge
H511	700961149	30' (9.1m) Double Knife / Standard Sickle		No Charge
H513	700961356	30' (9.1m) Double Knife / Schumacher Sickle.		No Charge
H511	700961150	35' (10.7m) Double Knife / Standard Sickle		No Charge
H513	700961361	35' (10.7m) Double Knife / Schumacher Sickle.		No Charge
H511	700961152	40' (12.2m) Double Knife / Standard Sickle		No Charge
H513	700961362	40' (12.2m) Double Knife / Schumacher Sickle.		No Charge

5300 DRAPER HEADER

Order Code	Catalog Number	Description	Approx. Weight(lb)	List Price
FIELD INSTALLED				**GROUP 99**
	700962895M	Cross Auger Kit for 20' (6.1m) Draper Header		5,148.00
	700962896M	Cross Auger Kit for 25' (7.6m) Draper Header		5,076.00
	700962897M	Cross Auger Kit for 30' (9.1m) Draper Header		6,502.00
	700962898M	Cross Auger Kit for 35' (10.7m) Draper Header		7,331.00
	700962899M	Cross Auger Kit for 40' (12.2m) Draper Header		7,454.00
	700959222M	Swivel Gauge Wheels (20' to 40') (Outboard mounting and will allow the gauge wheels to be in direct ground contact, while turning and can be used on rolling terrain.)		1,583.00
	700961182M	Gauge Wheels Kit (30' to 40')		1,509.00
	71396012	Parking Stand (Required to Disconnect Header if Gauge Wheels are not Ordered)	32	217.00
	700961141M	Insert, Narrow Opening Kit		306.00
	700961183M	Slow Speed Transport Kit for 30' Only (Acts as gauge wheel when in cutting position)		4,148.00
	700961365M	Slow Speed Transport Kit for 35' / 40' Only (Acts as gauge wheel when in cutting position)		4,148.00
	700961142M	Skid Shoe Kit		598.00
	700962375M	Double Knife Stub Guard Kit, 20'		1,538.00
	700962376M	Single Knife Stub Guard Kit, 25'		1,802.00
	700962378M*	Base Stub Guard Kit, 5'		418.00
	71428520M	Ship Safe Preservative Coating (Factory Applied) (Recommended for shipments occurring in November through March 31ST)		586.00

Note: Order additional 5' stub guard Kits as Required to Reach Desired Footage (works with both double and single knife stub guard kits).

ORDER FROM PARTS

	TBA	French Operators Manual and Decal Kit	2	No Charge
	TBA	Spanish Operators Manual and Decal Kit	2	No Charge

The Following Items are Required to Mount a 5300 Draper Header to a WR9700 Windrower:

- WR9700 Main Controller Software Verison 1.4.0 and VT Software 1.3.0 or later.
- Single Point Quick Coupler Kit (700961621M)
- Update Package (700961620M)
- High Pressure Auxiliary Manifold Relief Valve (700748026 from parts)
- Rear End Counterbalance Weight Kit (700961626M)

Reserved

HESSTON by MASSEY FERGUSON

MOWERS

DISC MOWER CONDITIONERS

FOB Hesston, KS

PRODUCT INFORMATION

Model	**1386**	**1383**
Width of Cut	16’ (4.9m)	13' (4m)
Windrow/ Swath Width	40" to 96" (1m to 2.4m)	40" to 96" (1m to 2.4m)
Pivot	Center	Center
Cutting Height: Minimum Maximum	 3/4“ (19mm) 3" (76mm)	 3/4” (19mm) 3" (76mm)
Horsepower (minimum requirements)	120	100
PTO (RPM)	1000	1000
Tires:	31x13.5-15	31x13.5-15

Model	**1366**	**1363**	**1359**
Width of Cut	9' 10" (2.8m)	9' 10" (2.8m)	9'3" (2.8m)
Windrow/ Swath Width	42" to 73" (1.1m to 1.9m)	42" to 73" (1.1m to 1.9m)	30" to 72" (.8m to 1.8m)
Pivot	Center	Side	Side
Cutting Height: Minimum	 0"	 0"	 1.3" (0m)
Maximum	8" (.2m)	8" (.2m)	3" (.1m)
Horsepower	75	75	60
(minimum requirements)			
PTO (RPM)	540	540	540
Tires:	11Lx15 std. or 31x13.5-15 opt.	11Lx15 std. or 31x13.5-15 opt.	9.5Lx14

Mississippi State Contract Discount: 10%

HESSTON by MASSEY FERGUSON

1386 CENTER PIVOT DISC MOWER CONDITIONER

FOB Hesston, KS

STANDARD EQUIPMENT

RazorBar Cast Modular Cutterbar
Working Width 16‘ (4.9m)
10 Discs (2450 RPM)
Disc diameter 24.5"
Modular Spur Gear Cutterbed Design
Swath Width 40" to 96" (1m to 2.4m)
Transport Width 16.25 ft (5m)
31 x 13.5 x 15 Tires
Disc Drive - 4HA Banded Belt to End of Cutterbed
20 Knives - Swing-away, Reversible
1000 PTO - Gearbox Swivel Hitch w/ Slip Overrunning Clutch
Cutting Height 3/4“ to 3" (19mm- 76mm)
Smooth Rock Guards
Top Shield Protector

Conditioner Drive -Enclosed Spur Gear with U-Joint Drive Shafts
110" (2.8m) Roller Conditioner Herringbone Steel on Steel Rolls
110" (2.8m) Rubber on Steel Herringbone Rolls Optional
110" (2.8m) Turbulence Reduction Roll
Hydraulic Conditioner Roll Tension
Auto Header Tilt with Lower Feature- Hydraulic Adjust
Roading Lock
Hitch Jack
Hydraulic Tongue Control

Tractor Requirements
120 PTO HP minimum with Fully Enclosed ROPS Cab
Two Double Acting Remote Valves

Order Code	Catalog Number	Description	Approx. Weight(lb)	List Price
		ONE ITEM FROM EACH GROUP MUST BE SPECIFIED UNLESS NOTED OTHERWISE		
BASE MACHINE				**GROUP 01**
MF1386	700960607	1386 Disc Mower Conditioner		49,671.00
TOP SHIELD PROTECTOR				**GROUP 02**
65-D210	700958142	Top Shield Protector		**In Base**
HAY CONDITIONER (One option must be selected)				**GROUP 03**
H203	700959295	Steel on Steel Conditioning Rolls		**In Base**
H201	700959294	Rubber on Steel Conditioning Rolls		No Charge
TONGUE - Required (Can not be ordered Loose)				**GROUP 04**
	700960628M	Swivel Tongue		No Charge
HITCH - Required (Can not be ordered Loose)				**GROUP 05**
	700960623M	3-Point Swivel Hitch	295	No Charge
	700960624M	Drawbar Swivel Hitch	280	No Charge
FIELD INSTALLED KITS - (order as desired)				**GROUP 99**
	MK11285	Steel Gauge Wheels		846.00
	700958746M	Filler Pan		139.00
	700960605M	Drawbar Hitch Kit		1,631.00
	700960610M	3-Point Hitch Kit		1,412.00
	71428520M	Ship Safe Preservative Coating (Factory Applied) (Recommended for shipments occurring in November through March 31ST)		586.00
ORDER FROM PARTS				
	700747903	French Operators Manual and Decal Kit	2	No Charge
	700747905	Spanish Operators Manual and Decal Kit	2	No Charge

Mississippi State Contract Discount: 10%

HESSTON by MASSEY FERGUSON

1383 CENTER PIVOT DISC MOWER CONDITIONER

FOB Hesston, KS

STANDARD EQUIPMENT

RazorBar Cast Modular Cutterbar
Working Width 13‘ (4.0m)
8 Discs (2450 RPM)
Disc diameter 24.5"
Modular Spur Gear Cutterbed Design
Swath Width 40" to 96" (1m to 2.4m)
Transport Width 159" (4.0m)
31 x 13.5 x 15 Tires
Disc Drive - 4HA Banded Belt to End of Cutterbed
16 Knives - Swing-away, Reversible
1000 PTO - Gearbox Swivel Hitch w/ Slip Overrunning Clutch
Cutting Height 3/4“ to 3" (19mm- 76mm)
Smooth Rock Guards
Top Shield Protector

Conditioner Drive - Enclosed Spur Gear with U-Joint Drive Shafts
110" (2.8m) Rubber on Steel Herringbone Rolls
110" (2.8m) Roller Conditioner Herringbone Steel on Steel Rolls- Optional
110" (2.8m) Turbulence Reduction Roll
Hydraulic Conditioner Roll Tension
Auto Header Tilt with Lower Feature- Hydraulic Adjust
Roading Lock
Hitch Jack
Hydraulic Tongue Control

Tractor Requirements
100 PTO HP minimum with Fully Enclosed ROPS Cab
Two Double Acting Remote Valves

Order Code	Catalog Number	Description	Approx. Weight(lb)	List Price
		ONE ITEM FROM EACH GROUP MUST BE SPECIFIED UNLESS NOTED OTHERWISE		
BASE MACHINE				**GROUP 01**
MF1383	700960603	1383 Disc Mower Conditioner		40,299.00
TOP SHIELD PROTECTOR				**GROUP 02**
65-D210	700958142	Top Shield Protector		**In Base**
HAY CONDITIONER (One option must be selected)				**GROUP 03**
H201	700959294	Rubber on Steel Conditioning Rolls		In Base
H203	700959295	Steel on Steel Conditioning Rolls		No Charge
TONGUE - Required (Can not be ordered Loose)				**GROUP 04**
	700960615M	Swivel Tongue		No Charge
HITCH - Required (Can not be ordered Loose)				**GROUP 05**
	700960623M	3-Point Swivel Hitch	295	No Charge
	700960624M	Drawbar Swivel Hitch	280	No Charge
FIELD INSTALLED KITS - (order as desired)				**GROUP 99**
	700958143M	High Skid Shoes		334.00
	700960605M	Drawbar Hitch Kit		1,631.00
	700960610M	3-Point Hitch Kit		1,412.00
	71428520M	Ship Safe Preservative Coating (Factory Applied) (Recommended for shipments occurring in November through March 31ST)		586.00
ORDER FROM PARTS				
	700168224	Filler Pan		Order from Parts
	700747903	French Operators Manual and Decal Kit	2	No Charge
	700747905	Spanish Operators Manual and Decal Kit	2	No Charge

Mississippi State Contract Discount: 10%

HESSTON by MASSEY FERGUSON

1366 CENTER PIVOT DISC MOWER CONDITIONER

FOB Hesston, KS

STANDARD EQUIPMENT

9'10" (2.8m) Disc Mower Conditioner
6 Discs (2220 RPM)
12 Knives (2 per Discs) Swing- Away Reversible
0" to 8" (.2m) Cutting Height
RazorBar™ Cast Modular Cutterbar
Modular Spur Gear Cutterbed Design
Adjustable Spring Tension
Hydraulic Tongue Control
Conditioner Options:
- Tine Rolls
- Herringbone Steel on Steel Rolls
- Herringbone Rubber on Rubber Rolls
- Length 73" (1.9m)

Top Door Protector
Swivel Tongue

Tractor Requirements
75 PTO HP minimum with Fully Enclosed ROPS Cab
One Single Acting & One Double Acting Remote Valve

Order Code	Catalog Number	Description	Approx. Weight(lb)	List Price
		ONE ITEM FROM EACH GROUP MUST BE SPECIFIED UNLESS NOTED OTHERWISE		
BASE MACHINE				**GROUP 01**
MF1366	700960308YF	1366 Base Center Pivot Disc Mower Conditioner		4,142.00
HAY CONDITIONER (One option must be selected)				**GROUP 02**
H203	700957595	Steel on Steel Conditioning Rolls		29,586.00
H204	700957596	Rubber on Rubber Conditioning Rolls		29,586.00
H206	700956876	Tine Conditioning Rolls		27,646.00
H200	700957951	Less Hay Conditioner		25,365.00
TIRES				**GROUP 03**
B104	700956874	11L x 15 Tires		**In Base**
B106	700958134	31 x 13.5-15 Tires		388.00
REQUIRED HITCH OPTIONS- (one must be chosen) (Can not be ordered Loose)				**GROUP 04**
	700962470M	Drawbar Hitch, 1000 RPM		No Charge
	700962472M	Drawbar Hitch, 540 RPM		No Charge
	700962471M	3-Point Hitch, 1000 RPM		571.00
	700962473M	3-Point Hitch, 540 RPM		571.00
FIELD INSTALLED KITS - (order as desired)				**GROUP 99**
	700957954M	Hydraulic Header Tilt		147.00
	71428520M	Ship Safe Preservative Coating (Factory Applied) (Recommended for shipments occurring in November through March 31ST)		586.00
ORDER FROM PARTS				
	700748726	Jack Stand Kit		ORDER FROM PARTS

HESSTON by MASSEY FERGUSON

1363 SIDE PULL DISC MOWER CONDITIONER

FOB Hesston, KS

STANDARD EQUIPMENT

9'10" (2.8m) Disc Mower Conditioner
6 Discs (2220 RPM)
12 Knives (2 per Discs) Swing- Away Reversible
0" to 8" (.2m) Cutting Height
Razor Bar™ Cast Modular Cutterbar
Modular Spur Gear Cutterbed Design
Adjustable Spring Tension
Hydraulic Tongue Control
Tine Roll Options:
- Herringbone Steel on Steel Rolls
- Herringbone Rubber on Rubber Rolls
- Length 73" (1.9m)

Top Door Protector
540 RPM PTO

Tractor Requirements
75 PTO HP minimum with Fully Enclosed ROPS Cab
One Single Acting & One Double Acting Remote Valve

Order Code	Catalog Number	Description	Approx. Weight(lb)	List Price
		ONE ITEM FROM EACH GROUP MUST BE SPECIFIED UNLESS NOTED OTHERWISE		
BASE MACHINE				**GROUP 01**
MF1363	700960303YF	1363 Side Pull Base Mower Conditioner		**In Base**
HAY CONDITIONER (One option must be selected)				**GROUP 02**
H203	700957595	Steel on Steel Conditioning Rolls		29,586.00
H204	700957596	Rubber on Rubber Conditioning Rolls		29,586.00
H206	700956876	Tine Conditioning Rolls		27,646.00
H200	700957951	Less Hay Conditioner		25,365.00
TIRES				**GROUP 03**
B104	700956874	11L x 15 Tires		**In Base**
B106	700958134	31 x 13.5-15 Tires		388.00
FIELD INSTALLED KITS - (order as desired)				**GROUP 99**
	700958379M	Hydraulic Header Tilt		151.00
	71428520M	Ship Safe Preservative Coating (Factory Applied) (Recommended for shipments occurring in November through March 31ST)		586.00
ORDER FROM PARTS				
	TBA	French Operators Manual and Decal Kit	2	No Charge
	TBA	Spanish Operators Manual and Decal Kit	2	No Charge

Mississippi State Contract Discount: 10%

HESSTON by MASSEY FERGUSON

1359 DISC MOWER CONDITIONER

FOB Hesston, KS

STANDARD EQUIPMENT

Cutting Width 9'3" (2.8m)
Mowing Elements- 7 Disc
Reversible Knives
540 RPM, 80 Degrees C.V. PTO Drive Shaft
Hydraulic Tongue Control
Mechanical Tongue Transport Lock
Hardened Skid Shoes
84" (2.1m) Conditioner Options:
  Rubber on Rubber - Powered Roll Opening
  Steel on Steel - Spring Tensioned
Adjustable Roll Tension
9.5L x 14 6 ply Flotation Tires
Highway Transport Chain
Overrunning / Slip Clutch Protection
3-Point Header Suspension

Tractor Requirements
60 PTO HP minimum with Fully Enclosed ROPS Cab
One Single Acting, One Double Acting Remote Valve

ONE ITEM FROM EACH GROUP MUST BE SPECIFIED UNLESS NOTED OTHERWISE

Order Code	Catalog Number	Description	Approx. Weight(lb)	List Price
BASE MACHINE				**GROUP 01**
MF1359	700960299YF	1359 Mower Conditioner		**In Base**
HAY CONDITIONER				**GROUP 02**
H203	700956886	Steel on Steel Conditioning Rolls		27,358.00
H204	700956331	Rubber on Rubber Conditioning Rolls		28,357.00
FIELD INSTALLED KITS - (order as desired)				**GROUP 99**
	MKD11177	2" (.1m) Topping Skids (Set of 4)	20	233.00
	MK11176	Lighting Package		556.00
	71428520M	Ship Safe Preservative Coating (Factory Applied) (Recommended for shipments occurring in November through March 31ST)		586.00
ORDER FROM PARTS				
	700730707	French Operators Manual and Decal Kit	2	No Charge
	700730708	Spanish Operators Manual and Decal Kit	2	No Charge

REAR / FRONT 3-POINT HITCH MOUNTED MOWER

PRODUCT INFORMATION

FOB Baltimore, MD

	DM1398 (Rear)	DM1340 (Front)
Width of Cut	30' 6" (9.3m)	9' 10" (2.8m)
Number of Disc	2 x 7	6
Windrow Swath Width	*6' to 10' 8" (1.8m to 3.3m)	*4' 9" to 7' 3" (1.5m to 2.2m)
Cutting Height: Minimum Maximum	Adjustable via Tractor Upper Link	1.5" (0m) 3" (.1m)
Horsepower (minimum requirements)	175 HP (no conditioner) *200 HP (tine conditioner)	75 HP (no conditioner) *90 HP (tine conditioner)
PTO (RPM)	1000 PTO RPM	1000 PTO RPM

NOTE: This is a general sales guide; for further product details and official specifications refer to product information guides and product literature.

* With Tine Conditioner

Mississippi State Contract Discount: 10%

DM1398 REAR MOWER

FOB Baltimore, MD

STANDARD EQUIPMENT

Working Width: 30' 6" (9.3m)
Swath width: 8'2" (2.5m) (no conditioner)
5'11" to 10'9" (1.6m to 3.3m) (tine conditioner)
Transport Width: 9'8" (3m)
Transport Height: 12'10" (3.7m)
2 x 7 Disc
1000 RPM PTO
1 3/8" 21 Spline PTO yoke
Hitch Category: II and III
Turbo Lift Hydraulic Mower Flotation
Compact Modular Angle Cutterbar
Safety Swing Break-away Protection
Main Drives: Gearboxes and drive shafts
Overrunning Clutch
Drive GUARD Individual Disc Protection

Tractor Requirements:
Recommended Tractor: MF7624 CVT
175 HP (no conditioner)
200 HP (tine conditioner)
Load Sensing Hydraulics or 2 SAV, 1 DAV for Rear Mower
Plus 1 DAV and 1 SAV for Front Mower

Order Code	Catalog Number	Description	Approx. Weight(lb)	List Price
		ONE ITEM FROM EACH GROUP MUST BE SPECIFIED UNLESS NOTED OTHERWISE		
		Must Be Ordered with a DM1340 FRONT MOWER		
BASE MACHINE				**GROUP 01**
DM1398	71440197	Rear 3-Point Hitch Mounted Mower with Tine Conditioner*		56,419.00
DM1398	71445568	Rear 3-Point Hitch Mounted Mower without Tine Conditioner		43,310.00
FACTORY INSTALLED VALVE OPTIONS - (must choose one)				**GROUP 02**
	700960863	Electromagnetic 2/2 Way Valve ⊙		803.00
	71436149	Electro-Hydraulic Load Sensing Control Required for tractors with less than 5 DAV		3,715.00
FACTORY INSTALLED OPTION				**GROUP 03**
	71445569	Protective Cover ◆		1,202.00
FIELD INSTALLED KITS - (order as desired)				**GROUP 99**
	700960874	Additional Skid		87.00
	71440199	PTO Yoke 1 3/4" (20 Spline)		TBA
ORDER FROM PARTS				
	TBA	French Operators Manual and Decal Kit	2	No Charge
	TBA	Spanish Operators Manual and Decal Kit	2	No Charge

*Protective Curtain must be ordered from parts when the tine conditioner is removed.

⊙For combined lifting of the Rear Mowers with 1 DAV

◆For use on the tine conditioner models while operating with conditioner removed

Mississippi State Contract Discount: 10%

MASSEY FERGUSON®

DM1340 FRONT MOWER

FOB Baltimore, MD

STANDARD EQUIPMENT

Working Width: 9'10" (3.3m)
Swath Width: 6'7" (2m) (no conditioner)
4' 9" to 7' 3" (1.5m to 2.2m) (tine conditioner)
Transport Width: 9'10" (2.8m)
Transport Length: 6' 2" (1.9m)
6 Disc
1000 RPM PTO
1 3/8" 21 Spline PTO yoke
Reversible Gearbox (CW or CCW)
Overrunning Clutch
Trailing Linkage Spring Flotation
Compact Modular Angle Cutterbar
Adjustable Cutting Height: 1.5" to 2.8" (0m to .1m)
Hydraulic Side Shift: 10" (.3m) right and left
Header Lift: Hydraulic Cylinder
Header Lift Height: 17" (.4m)
Header Suspension Travel: 22" (.6m)
Lateral Tilt: 26.4 Degrees
Drive GUARD Individual Disc Protection

Tractor Requirements:
75 HP (no conditioner)
90 HP (tine conditioner)
1 DAV, 1 SAV
Front 3-Point Hitch
Front 1000 RPM PTO
1 3/8" 21 Spline PTO

Order Code	Catalog Number	Description	Approx. Weight(lb)	List Price
ONE ITEM FROM EACH GROUP MUST BE SPECIFIED UNLESS NOTED OTHERWISE				
BASE MACHINE				**GROUP 01**
DM1340*	71440196	Front 3-Point Hitch Mounted Mower with Tine Conditioner		23,950.00
DM1340*	71445567	Front 3-Point Hitch Mounted Mower without Tine Conditioner		18,273.00
FACTORY INSTALLED				**GROUP 02**
	71445570	Protective Cover◆		564.00
FIELD INSTALLED KITS - (order as desired)				**GROUP 99**
	71436149M	Electro-Hydraulic Load Sensing Control Required for tractors with less than 5 DAV		3,715.00
	700960874	Additional Skid		87.00
ORDER FROM PARTS				
	TBA	French Operators Manual and Decal Kit	2	No Charge
	TBA	Spanish Operators Manual and Decal Kit	2	No Charge

***Note: DM1340 can be ordered separately or used in conjunction with the DM1398 Rear Mower or a pull type Disc Mower Conditioner.**

◆ For use on the tine conditioner models while operating with conditioner removed.

MASSEY FERGUSON®

DISC MOWERS
PRODUCT INFORMATION
FOB Baltimore, MD

Farmer Series
(MUST ORDER IN PAIRS OF 2 OF ANY COMBINATION)

	DM1305	DM1306	DM1308	DM1309
Width of Cut	5'5" (1.7m)	6'9" (2.1m)	7'11" (2.2m)	9'3" (2.8m)
Number of Discs	4	5	6	7
Disc Speed	3000 RPM	3000 RPM	3000 RPM	3000 RPM
Minimum HP Requirement	30 HP	41 HP	50 HP	60 HP
PTO (RPM)	540 RPM	540 RPM	540 RPM	540 RPM

Professional Series
(MUST ORDER IN PAIRS OF 2 OF ANY COMBINATION)

	DM1358	DM1361	DM1362
Width of Cut	8'4" (2.6m)	9'10" (2.8m)	11'6" (3.5m)
Number of Discs	6	7	8
Disc Speed	3000 RPM	3000 RPM	3000 RPM
Minimum HP Requirement	54 HP	61HP	68HP
HP with Conditioner	75 HP	86HP	86HP
PTO (RPM)	540 RPM	540 RPM	540 RPM

NOTE: This is a general sales guide; for further product details and official specifications refer to product information guides and product literature.

Mississippi State Contract Discount: 10%

MASSEY FERGUSON®

DM1305 / DM1306 / DM1308 / DM1309

FARMER SERIES DISC MOWERS
(MUST ORDER IN PAIRS OF 2 OF ANY COMBINATION)

FOB Baltimore, MD

STANDARD EQUIPMENT

Spur Gear Cutterbar
Spring-Loaded Anti-Collision Device
Folding Curtains
Parking Stand
Hydraulic Lift Cylinder
Overrunning Clutch
Cat I and II Hitch
Cutterbar Drive Protection
Common Oil Bath
Solid Frame with Exterior Support
Outer Swathboard

Order Code	Catalog Number	Description	Approx. Weight(lb)	List Price
		ONE ITEM FROM EACH GROUP MUST BE SPECIFIED UNLESS NOTED OTHERWISE		
BASE MACHINE				**GROUP 01**
MFDM1305	700960854	Disc Mower with 4 Disc and 5'5" (1.7m) Cut	820	6,692.00
MFDM1306	700960855	Disc Mower with 5 Disc and 6'9" (2.1m) Cut	897	7,955.00
MFDM1308	700960857	Disc Mower with 6 Disc and 7'11" (2.2m) Cut	963	8,925.00
MFDM1309	700960858	Disc Mower with 7 Disc and 9'3" (2.8m) Cut	1047	10,010.00
FIELD INSTALLED				**GROUP 02**
	700960868	Swath Guide (left) for DM1305, DM1306, DM1308		600.00
	700960869	Swath Guide (left) for DM1309		728.00
	700960870*	Welded-on Skid (Quantity of one per Disc is Required for Rocky Conditions)		34.00
ORDER FROM PARTS				
	FEL428928	Quick Hitch Adapter Kit (Cat II - Cat III NARROW)		Order from Parts
	FEL134764 FEL134765 FEL134768	High Cutting Device		Order from Parts

(IMPORTANT NOTE: Must order in pairs of 2 of any Combination)

Mississippi State Contract Discount: 10%

MASSEY FERGUSON®

DM1358 / DM1361 / DM1362

PROFESSIONAL SERIES DISC MOWERS
(MUST ORDER IN PAIRS OF 2 OF ANY COMBINATION)

FOB Baltimore, MD

STANDARD EQUIPMENT

Compact Modular Angle Gear Cutterbar
Spring-Loaded Anti-Collision Device
Cutterbar Drive Protection
Common Oil Reservoir
Lifetime Cutterbar Oil
Heavy Duty Skid Plate
Heavy Duty Main Frame
Hydraulic Lift Cylinder
Overrunning Clutch
Outer Swathboard
Drive GUARD Cutterbar Protection

ONE ITEM FROM EACH GROUP MUST BE SPECIFIED UNLESS NOTED OTHERWISE

Order Code	Catalog Number	Description	Approx. Weight(lb)	List Price
BASE MACHINE				**GROUP 01**
MFDM1358	700960859	Disc Mower with 6 Disc and 8'4" (2.6m) Cut		11,530.00
MFDM1361	700960860	Disc Mower with 7 Disc and 9'10" (2.8m) Cut		12,577.00
MFDM1362	700960861	Disc Mower with 8 Disc and 11'6" (3.5m) Cut		15,103.00
FIELD INSTALLED KITS - (order as desired)				**GROUP 99**
	700960871	Swath Disc (left) for DM1358, DM1361		282.00
	700960873	Swath Guide (left) for DM1362		432.00
	700960874	Additional Skid (qty 5) for DM1358 Additional Skid (qty 6) for DM1361 Additional Skid (qty 7) for DM1362		87.00
	700960875	Tine Conditioner for DM1358		5,478.00
	700960877	Roller Conditioner for DM1358		7,140.00
	700960876	Tine Conditioner for DM1361		6,670.00
	700960878	Spreader Device for DM1358		298.00
	700960879	Spreader Device for DM1361		389.00
	700960881	Stone Guard for DM1362		221.00
ORDER FROM PARTS				
	FEL428929	Quick Hitch Adapter Kit (Cat II)		Order from Parts

(IMPORTANT NOTE: Must order in pairs of 2 of any Combination)

RAKES AND TEDDERS

MASSEY FERGUSON®

V-RAKES

FOB Marshfield, Wisconsin

PRODUCT INFORMATION

	1508	1510	1512
Rake Wheels	8	10	12
Working Widths	16' (4.3m) to 20' (6.1m)	18' (5.5m) to 22' (6.7m)	20' (6.1m) to 24' (7.3m)
Transport Width	9'6" (2.9m)	9'6" (2.9m)	10'6" (3.2m)
Transport Length	12' 8" (3.9m)	15' 6"(4.8m)	18'(5.5m)

STANDARD EQUIPMENT

55" (1.4m) Diameter Wheels
40 Teeth per Wheel, 7 mm Tooth Diameter
Hydraulic Lift for Raising Rake Wheels
Wheel Hubs with Tapered Roller Bearings and Dust Covers
2 Gauge/Transport Wheels
Safety Chains
3 Positions for Raking
Variable Windrow Width from 48" to 72" (1.2m to 1.8)
Hydraulic Fold
175/80 x 13 Tires
Jack

Order Code	Catalog Number	Description	Approx. Weight(lb)	List Price
ONE ITEM FROM EACH GROUP MUST BE SPECIFIED UNLESS NOTED OTHERWISE				
BASE MACHINE				**GROUP 01**
MF1508	71436079	8 Wheel V-Rake.	1125	5,300.00
MF1510	71436080	10 Wheel V-Rake.	1275	5,699.00
MF1512	71436081	12 Wheel V-Rake.	1440	6,093.00
FIELD INSTALLED KITS - (order as desired)				**GROUP 99**
	MK31236	Center Kicker Wheels Kit (For use with 1510 and 1512 only). .		602.00

Mississippi State Contract Discount: 10%

MASSEY FERGUSON®

V + Y RAKES

FOB Marshfield, Wisconsin

PRODUCT INFORMATION

	SV410
Rake Wheels	10
Working Widths	22' (6.7m)
Transport Width	11' 2" (3.4m)
Transport Length	19'10" (5.8m)

STANDARD EQUIPMENT

55" (1.4m) Diameter Wheels
40 Teeth per Wheel
Front Hitch Jack
4 Wheel Tandem Axle
ST175/80D13 Tires
Safety Chains
Hydraulic Frame Width
Hydraulic Frame Angle

Tractors Requirements
40 HP (30kw) for SV410
60 HP (44kw) for SV440
2 Remote Valves Required

Order Code	Catalog Number	Description	Approx. Weight(lb)	List Price
		ONE ITEM FROM EACH GROUP MUST BE SPECIFIED UNLESS NOTED OTHERWISE		
BASE MACHINE				**GROUP 01**
MFSV410	71440329	10 Wheel V-Rake.	2290	14,840.00
FIELD INSTALLED KITS - (order as desired)				**GROUP 99**
	71440331	12 Wheel Rake V Type (2 Wheel Kit) (For use with SV410) . . . 2 Wheel Addition to the Front of 10 Wheel Rake for 12 Wheels		1,012.00
	71440332	13 Wheel Rake V Type (3 Wheel Kit) (For use with SV410) . . . 3 Wheel Addition to the Rear of 10 Wheel Rake for 13 Wheels		1,611.00
	71440337	Transport Lighting / Work Light		441.00

Note: Both Front and Rear Wheel Kits can be added to (Total of 15 Wheels)

Mississippi State Contract Discount: 10%

MASSEY FERGUSON®

BI-FOLD WHEEL RAKES

FOB Marshfield, Wisconsin

PRODUCT INFORMATION

HI-CAPACITY MODELS

	3983	3986	3995
Raking			
-Positions	Infinite	Infinite	22
-Widths (ft)	Up to 24' (7.3m)	Up to 28' (8.5m)	25' to 35' (7.6m to 10.7m)
Windrow			
-Widths (in)	38" to 58"	38" to 58"	38" to 61"
-Widths (m)	(1.0m to 1.5m)	(1.0m to 1.5m)	(1.0m to 1.5m)
Frame Fold	Hydraulic	Hydraulic	Hydraulic
No. of Finger Wheels	12	14	18
Transport Wheels	4	6	8
DIMENSIONS and WEIGHTS			
Transport Width	8' (2.4m)	8'1" (2.5m)	8'1" (2.5m)
Overall Length	24'6"' (7.5m)	27'3" (8.3m)	34' (10.4m)
TRACTOR REQUIREMENTS			
Horsepower (min.)	30 HP (22 kw)	40 HP (30 kw)	50 HP (37 kw)
Hydraulics	One Double Acting Remote and One Single Acting Remote	One Double Acting Remote and One Single Acting Remote	One Double Acting Remote and One Single Acting Remote

STANDARD EQUIPMENT

40 Teeth per Wheel
55" (1.4m) Diameter Wheels
Hydraulic Fold
6.70-15" (.2m to .4m) Tires
Transport Lights
Hydraulic Lift for Raising Rake Wheels
Wheel Hubs with Tapered Roller Bearings
Jack
Safety Chain

Order Code	Catalog Number	Description	Code	Approx. Weight(lb)	List Price
		ONE ITEM FROM EACH GROUP MUST BE SPECIFIED UNLESS NOTED OTHERWISE			
BASE MACHINE					**GROUP 01**
MF3983	71436082	3983 Bi-Fold Rake, 12 Wheel		3500	16,018.00
MF3986	71436083	3986 Bi-Fold Rake, 14 Wheel		3800	19,266.00
MF3995	71436084	3995 Bi-Fold Rake, 18 Wheel		5000	25,635.00
FIELD INSTALLED KITS - (order as desired)					**GROUP 99**
	MK31238	Walking Beam Rear Wheel Kit (For use with MF3983)		175	1,105.00
	MK31250	Center Kicker Wheels Kit (Set of 2) (For use with MF3983)			1,702.00
	MK31251	Center Kicker Wheels Kit (Set of 2) (For use with MF3986)			1,702.00
	MK31252	Center Kicker Wheels Kit (Set of 2) (For use with MF3995)			1,764.00
	MK31237	3 Wheel Kicker Kit (For use with MF3983 and MF3986)			3,153.00
	MK31239	Side Support Gauge Wheels Kit (Set of 2) (For use w/ MF3986)			1,444.00
	MK31240	Wind Panel Kit (Order one kit per wheel.)			94.00
	MK31241	2 Wheel Expansion Kit (For use with MF3986) (To Convert a 14 Wheel Rake to a 16 Wheel Rake)			1,580.00

Mississippi State Contract Discount: 10%

MASSEY FERGUSON®

5130 HEAVY DUTY WHEEL RAKE

FOB Marshfield, Wisconsin

PRODUCT INFORMATION

Raking	
-Positions	Infinite
-Widths (ft)	Up to 30.3' (9.2m)
Windrow	
-Widths (in)	72"
-Widths (m)	(1.8m)
Frame Fold	Hydraulic
No. of Finger Wheels	17
Transport Wheels	(4) 9.5L-15SL
DIMENSIONS and WEIGHTS	
Transport Width	12'25"' (3.7m)
Overall Length	28'3" (8.6 m)
TRACTOR REQUIREMENTS	
Horsepower (min.)	65 HP (49 kw)
Hydraulics	One Double Acting Remote

STANDARD EQUIPMENT

36 Teeth per Wheel
60" (1.5m) Diameter Wheels with Rubber Mounted Teeth
Wheel Hubs with Tapered Roller Bearings
Heavy Duty Taper Roller Bearings on Rake Arms
Rake Wheel Wind Panels
Self-Storing Transport Lock for Rake Beam Arms
Hydraulic Lift and Fold
Electrical Controlled Independent Rake Arms
Adjustable Rake Wheel Ground Pressure
Transport and Work Lights
Safety Chain
Jack

Order Code	Catalog Number	Description	Code	Approx. Weight(lb)	List Price

ONE ITEM FROM EACH GROUP MUST BE SPECIFIED UNLESS NOTED OTHERWISE

BASE MACHINE — **GROUP 01**

MF5130	71430688	5130 Heavy Duty Rake, 17 Wheel		5800	37,809.00

FIELD INSTALLED KITS - (order as desired) — **GROUP 99**

	700738878	2 Wheel Front Extension Kit	3,937.00
	700738879	1 Wheel Rear Extension Kit	2,388.00

Mississippi State Contract Discount: 10%

MASSEY FERGUSON®

ROTARY RAKES
PRODUCT INFORMATION

FOB Baltimore, Maryland

	RK3802	RK3814	RK3845
Working Width (One Sided)	11'6" (3.5m)	14'75" (4.5m)	23' (7.0m)
Horsepower Min.	27 HP	41 HP	26 HP
Transport Width (Tire Arms)	5'11" (1.6m) (Dismounted)	6' (1.8m) (Dismounted)	9'9" (3m)
Transport Length	11'6" (3.5m)	11'35"	
Transport Height (Dismounted Tire Arms)			10'10" (3.1m)
Hitch	Cat I & II	Drawbar	Cat I & II
Rotor Delivery	Right Side Delivery	Right Side Delivery	Right Delivery plus Center + Right Delivery
Tractor Hydraulics	None	1SAV	1SAV

STANDARD EQUIPMENT
Three Position Swath Curtain
Parking Stand
Safety Guards and SMV Sign
Transport Safety Chain
Electrical Lighting
Tandem Axles on Rotor Chassis

Tractor Requirements:
Tractor with 540 PTO
Rollover Protective Structure (ROPS) and seat belt
Recommended to run in float position

Order Code	Catalog Number	Description	Approx. Weight(lb)	List Price
ONE ITEM FROM EACH GROUP MUST BE SPECIFIED UNLESS NOTED OTHERWISE				
BASE MACHINE				**GROUP 01**
MFRK3802	700960852	3802 3-Point Rotary Rake		7,731.00
MFRK3814	71445566	3814 Pull Type Rotary Rake	1190	10,853.00
MFRK3845	700960853	3845 Pull Type Rotary Rake		26,308.00
FIELD INSTALLED KITS - (order as desired)				**GROUP 99**
	700960862	Spare Wheel 16/6.50-8 with support for RK3802, RK3845		180.00
	71437768	Front Rotor Swath Former for 2 Swath Delivery - RK3845		716.00

Mississippi State Contract Discount: 10%

MASSEY FERGUSON®

ROTARY RAKES
PRODUCT INFORMATION

FOB Baltimore, Maryland

	RK3855	RK3879 PRO
Working Width (One Sided)	25'26" (7.7m)	24'8" to 26'57" (7.6m to 8.1m)
Working Width (Two Sided)	27'55" (8.4m)	
Horsepower Min.	41 HP	48 HP
Transport Width	9'84" (3m)	9'77" (3m)
(Tire Arms)	(Mounted)	
Transport Length	24'37" (7.4m)	17'48" (5.3m)
Transport Height (Dismounted Tire Arms)	11'97" (3.6m)	11'81" (3.6m)
Hitch	Cat I & II	Cat I & II
Rotor Delivery	Right Delivery or Center+ Right Delivery	Center Delivery
Tractor Hydraulics	1SAV	1SAV

STANDARD EQUIPMENT
Three Position Swath Curtain
Transport Chassis
Parking Stand
Safety Guards and SMV Sign
Transport Safety Chain
Electrical Lighting
Tandem Axles on Rotor Chassis

Tractor Requirements:
Tractor with 540 PTO
Rollover Protective Structure (ROPS) and seat belt
Recommended to run in float position

Order Code	Catalog Number	Description	Approx. Weight(lb)	List Price
		ONE ITEM FROM EACH GROUP MUST BE SPECIFIED UNLESS NOTED OTHERWISE		
BASE MACHINE				**GROUP 01**
MFRK3855	71427756	3855 Mounted Rotary Rake	4629	31,731.00
MFRK3879P	71427755	3879 Pro Mounted Rotary Rake	4409	31,780.00
FIELD INSTALLED KITS - (order as desired)				**GROUP 99**
	700960862	Spare Wheel 16/6.50-8 with support for RK3855		180.00
	71437768	Front Rotor Swath Former for 2 Swath Delivery (RK3855 only).		716.00
	700960866	Individual Lifting Device for RK3879		374.00
	700960867	Spare Wheel 18/8.50-8 for RK3879		285.00

Mississippi State Contract Discount: 10%

MASSEY FERGUSON®

PULL-TYPE TEDDERS

PRODUCT INFORMATION

FOB Baltimore, Maryland

	TD1620	TD1635	TD1648	TD1658	TD1655	TD1665
Tedding Width	8'17" (2.5m)	17'06"' (5.2m)	25'26" (7.7m)	25'26" (7.7m)	33'6" (10.2m)	41'8" (12.7m)
Transport Width	9'75" (3m)	9'71" (3m)	9'84" (3m)	9'12" (2.8m)	9'10" (2.8m)	9'10" (2.8m)
Transport Length	10'33" (3.1m)	8'75" (2.7m)	14'69" (4.5m)	18'33" (5.6m)	15'8" (4.8m)	18'4" (5.6m)
Rotors	2	4	6	6	8	10
Arms / Rotors	6	6	6	6	6	6
Wheels:						
16 / 6.50-6	2					
16 / 6.50-8		2	4	6	6	8
18 / 8.50-8		2	2	0	2	2
Horsepower (min. PTO):	20 HP	30 HP	41 HP	41 HP	54 HP	90 HP
Hitch	Pull-Type	Drawbar	Drawbar	Drawbar	Drawbar	Drawbar
Transport	None	Vertical Fold	Transport Chassis	Horizontal Fold	Chassis	Chassis

STANDARD EQUIPMENT

540 RPM PTO
Parking Jack (Pull Type Hitch)
Safety Chain (Pull Type Units)
SMV Sign
Drive Protection Clutch
Galvanized Tine Arms
Super C Tines
Tine Saver

Tractor Requirements:
One Single Acting Hydraulic Remote (2DAV for TD1665)
Tractor with 540 PTO

Order Code	Catalog Number	Description	Approx. Weight(lb)	List Price

ONE ITEM FROM EACH GROUP MUST BE SPECIFIED UNLESS NOTED OTHERWISE

Note: TD1620 must be ordered and shipped in multiples of 2.

BASE MACHINE — **GROUP 01**

MFTD1620	71436146	TD1620, 2 Rotor, 8' (2.5m) Tedder	513	3,399.00
MFTD1635	71427751	TD1635, 4 Rotor, 17' (5.2m) Tedder	1223	9,536.00
MFTD1648	71427752	TD1648, 6 Rotor, Transport Chassis, 25' (7.7m) Tedder	2727	19,767.00
MFTD1658	71427753	TD1658, 6 Rotor, Hyd. Rear Fold, 25' (7.7m) Tedder	1962	17,480.00
MFTD1655	700960850	TD1655, 8 Rotor, Transport Chassis, 33'6"' (10.2m) Tedder		29,602.00
MFTD1665	700960851	TD1665, 10 Rotor, Transport Chassis, 41'8" (12.7m) Tedder		34,967.00

FACTORY INSTALLED — **GROUP 02**

	700960865	Electromagnetic 2/2 Valve-to operate machine w/ only 1-DAV for TD1655, TD1665	686.00

ROUND BALERS

HESSTON by MASSEY FERGUSON

ROUND BALERS

PRODUCT INFORMATION

	2956A/2956	2946A/2946
Bale Size Width	61.5" (1.6m)	46.5” (.4m)
Diameter - min.	30" (.8m)	30" (.8m)
Diameter - max.	72" (1.8m)	72" (1.8m)
Max. Weight (lbs.)	2200	1700 Dry Hay 2000 Silage
Max. Volume (cu ft)	145	110
Pick-up Width - Tine to Tine (in)	80.6" (2m)	65" (1.7m)
Mesh Wrap Option	YES	YES
Tires	14L x 16.1 21.5L x 16.1 opt.	14L x 16.1 21.5L x 16.1 opt.

TRACTOR REQUIREMENTS

Horsepower (minimum)	70	65
PTO (RPM)	540 or 1000	540

ECONOMY SERIES

	1745	1734
Bale Size Width	46.5" (1.2m)	39" (1m)
Diameter - min.	30" (.8m)	30" (.8m)
Diameter - max.	62" (1.6m)	52" (1.3m)
Max. Weight (lbs.)	1250lbs	550lbs
Pick-up Width - Tine to Tine	44	34
Mesh Option	YES	No
Tires	31 x 13.5 - 15	7.60 x 15
Optional	14L - 16.1	

TRACTOR REQUIREMENTS

Horsepower (minimum)	40	30
PTO (RPM)	540	540

NOTE: This is a general sales guide; for further product details and official specifications refer to product information guides and product literature.

Mississippi State Contract Discount: 10%

2956A ROUND BALER

FOB Hesston, KS

STANDARD EQUIPMENT

61.5" (1.6m) Wide x 72" (1.8m) Diameter Bale
80.6" (2m) Wide Pickup Assembly - Dual CamTrack Tine Control
Pickup Wind Guard
Slip Clutch with Hydraulic Declutcher
Bale Counter
Bale Size Indicator
"Bale Full" Audio and Visual Alert
3 Bar Color Coded Bale Shape Indicator
Direct Feed, Rotor, Open Throat Chamber
540/1000 RPM PTO Drive
Hydraulic Pickup Lift
Extra Mesh Roll Storage
  Over the Edge Mesh Wrap Capabilities
Twine Tie and Mesh Wrap
QCS - Quad Cylinder Bale Density System

Automatic Tying when Preset Bale Size is reached
  with Manual Override
Tires:
  14Lx16.1 Std.
  21.5L 16.1 Opt.
Dual Tube Twine Arm
Staggered Belt Clean Out
Wedge Grip Belts with Alligator Lacings
Electrically Activated Twine and Mesh Wrap Systems
Safety Chain
Warning Light (Flashing)

Tractor Requirements
70 PTO HP (minimum)
One Double Acting Remote Valve
Bale Control Monitor required to Operate Baler
  See Group 98

Order Code	Catalog Number	Description	Approx. Weight(lb)	List Price
		ONE ITEM FROM EACH GROUP MUST BE SPECIFIED		
BASE MACHINE				**GROUP 01**
MF2956A	700960969YF	2956A Round Baler		52,831.00
TIRES AND AXLES				**GROUP 02**
B111	700955295	14L-16.1 with Standard Axle		**In Base**
B113	700956178	21.5L-16.1 with Suspension Axle		
DRIVELINE				**GROUP 03**
LA47	700955626	540 RPM PTO		**In Base**
LA50	700955627	1000 RPM PTO		No Charge
BALE EJECTION				**GROUP 04**
B603	700956241	Hydraulic Kicker		No Charge
B602	700955603	Less Kicker (requires 700959586M -Bale Ramp Kit)		(2,547.00)
TWINE TIE / MESH WRAP				**GROUP 05**
B103	Standard*	Twine and Mesh Included In Base		**In Base**
B101	700955628	Twine Tie (Less Mesh)		(5,354.00)
B102	700955604*	Mesh Wrap (Less Twine Tie)		(2,195.00)

*Requires B603, 700956241 Kicker or 700959586M - Bale Ramp Kit

BALE CONTROL MONITOR - FIELD INSTALLED **GROUP 98**

Includes harness, power adapter and hardware to mount Console inside the tractor cab.
Required for tractors not equipped with ISO 11783 plug and Console.

	700957986M	C1000 Monitor		2,915.00

For Information on AGCO Hay Preservative and Applicators For Balers, See Pages 84 & 85.

HESSTON by MASSEY FERGUSON

2956A ROUND BALER

Order Code	Catalog Number	Description	Approx. Weight(lb)	List Price
FIELD INSTALLED KITS- (order as desired)				**GROUP 99**
	MK51249	Harness, Switched Power (To Hook Console Directly to Battery)		180.00
	MK50556	Fire Extinguisher Kit	17	533.00
	MK51018	Remote Start Switch		99.00
	700958057M	Silage Kit		1,141.00
	700958062M	Twine Tie Addition Kit		2,131.00
	700959492M	Mesh Wrap		5,592.00
	700958130M	Soft Core Bale Kit		114.00
	700958020M	Light Kit		117.00
	700959622M	Solid Windguard (Residue Crop)		711.00
	700959586M	Bale Ramp Kit		757.00
	700958018M	Short Crop Kit		357.00
	700961569M*	Solid Windguard Kit		487.00
	700961571M	Roller Windguard Kit		362.00
	71428520M	Ship Safe Preservative Coating (Factory Applied) (Recommended for shipments occurring in November through March 31ST)		586.00

*Note: Updated Solid Windguard Kit to Allow Roller Attachment

ORDER FROM PARTS

	700741518	French Operators Manual and Decal Kit	2	No Charge
	700741520	Spanish Operators Manual and Decal Kit	2	No Charge

Note: To Convert from 540 PTO to 1000 PTO order 1-3/8” 21 Spline Yoke (700 733 694) or 1-3/4” 20 Spline Yoke (700 733 702) from Parts.

Mississippi State Contract Discount: 10%

2956 ROUND BALER

FOB Hesston, KS

STANDARD EQUIPMENT

61.5" (1.6m) Wide x 72" (1.8m) Diameter Bale
80.6" (2m) Wide Pickup Assembly - Dual CamTrack Tine Control
Pickup Wind Guard
Slip Clutch with Hydraulic Declutcher
Bale Counter
Bale Size Indicator
"Bale Full" Audio and Visual Alert
3 Bar Color Coded Bale Shape Indicator
Direct Feed, Rotor, Open Throat Chamber
540/1000 RPM PTO Drive
Hydraulic Pickup Lift
Extra Mesh Roll Storage
Over the Edge Mesh Wrap Capabilities
Twine Tie and Mesh Wrap
QCS - Quad Cylinder Bale Density System
Automatic Tying when Preset Bale Size is reached with Manual Override
Tires:
14Lx16.1 Std.
21.5L 16.1 Opt.
Dual Tube Twine Arm
Staggered Belt Clean Out
Wedge Grip Belts with Alligator Lacings
Electrically Activated Twine and Mesh Wrap Systems
Safety Chain
Warning Light (Flashing)

Tractor Requirements
70 PTO HP (minimum)
Two Double Acting Remote Valves
Bale Control Monitor required to Operate Baler
See Group 98

Order Code	Catalog Number	Description	Approx. Weight(lb)	List Price
		ONE ITEM FROM EACH GROUP MUST BE SPECIFIED		
BASE MACHINE				**GROUP 01**
MF2956	700960968YF	2956 Round Baler		47,300.00
TIRES AND AXLES				**GROUP 02**
B111	700955295	14L-16.1 with Standard Axle		**In Base**
B113	700956178	21.5L-16.1 with Suspension Axle		
DRIVELINE				**GROUP 03**
LA47	700955626	540 RPM PTO		**In Base**
LA50	700955627	1000 RPM PTO		No Charge
BALE EJECTION				**GROUP 04**
B602	700955603	Less Kicker		No Charge
B601	700955602	Kicker		2,547.00
TWINE TIE / MESH WRAP				**GROUP 06**
B103	Standard*	Twine and Mesh Included In Base		**In Base**
B101	700955628	Twine Tie (Less Mesh)		(5,354.00)
B102	700955604*	Mesh Wrap (Less Twine Tie)		(2,195.00)

*Requires B601, 700955602 Kicker or 700959586M - Bale Ramp Kit

BALE CONTROL MONITOR - FIELD INSTALLED **GROUP 98**

Includes harness, power adapter and hardware to mount Console inside the tractor cab.
Required for tractors not equipped with ISO 11783 plug and Console.

	700957986M	C1000 Monitor		2,915.00

For Information on AGCO Hay Preservative and Applicators For Balers, See Pages 84 & 85.

HESSTON by MASSEY FERGUSON

2956 ROUND BALER

Order Code	Catalog Number	Description	Approx. Weight(lb)	List Price
FIELD INSTALLED KITS- (order as desired)				**GROUP 99**
	MK51249	Harness, Switched Power (To Hook Console Directly to Battery)		180.00
	MK50556	Fire Extinguisher Kit	17	533.00
	MK51018	Remote Start Switch		99.00
	700957930M	Bale Kicker Kit		2,547.00
	700958057M	Silage Kit		1,141.00
	700958062M	Twine Tie Addition Kit		2,131.00
	700959492M	Mesh Wrap		5,592.00
	700958129M	Soft Core Bale Kit		215.00
	700958020M	Light Kit		117.00
	700959622M	Solid Windguard (Residue Crop)		711.00
	700959586M	Bale Ramp Kit		757.00
	700958018M	Short Crop Kit		357.00
	700961569M*	Solid Windguard Kit		487.00
	700961571M	Roller Windguard Kit		362.00
	71428520M	Ship Safe Preservative Coating (Factory Applied) (Recommended for shipments occurring in November through March 31ST)		586.00

*Note: Updated Solid Windguard Kit to Allow Roller Attachment

ORDER FROM PARTS

	700741518	French Operators Manual and Decal Kit	2	No Charge
	700741520	Spanish Operators Manual and Decal Kit	2	No Charge

Note: To Convert from 540 PTO to 1000 PTO order 1-3/8” 21 Spline Yoke (700 733 694) or 1-3/4” 20 Spline Yoke (700 733 702) from Parts.

Mississippi State Contract Discount: 10%

2946A ROUND BALER

FOB Hesston, KS

STANDARD EQUIPMENT

46.5" (1.2m) Wide x 72" (1.8m) Diameter Bale
65" (1.7m) Wide Pickup Assembly - Dual CamTrack Tine Control
Pickup Wind Guard
Slip Clutch with Hydraulic Declutcher
Bale Counter
Bale Size Indicator
"Bale Full" Audio and Visual Alert
3 Bar Color Coded Bale Shape Indicator
Direct Feed, Rotor, Open Throat Chamber
540/1000 RPM PTO Drive
Hydraulic Pickup Lift
Extra Mesh Roll Storage
Over the Edge Mesh Wrap Capabilities
Twine Tie and Mesh Wrap
QCS - Quad Cylinder Bale Density System
Automatic Tying when Preset Bale Size is reached with Manual Override
Tires:
14Lx16.1 Std.
21.5L 16.1 Opt.
Dual Tube Twine Arm
Staggered Belt Clean Out
Wedge Grip Belts with Alligator Lacings
Electrically Activated Twine and Mesh Wrap Systems
Safety Chain
Warning Light (Flashing)

Tractor Requirements
70 PTO HP (minimum)
One Double Acting Remote Valve
Bale Control Monitor required to Operate Baler
See Group 98

Order Code	Catalog Number	Description	Approx. Weight(lb)	List Price

ONE ITEM FROM EACH GROUP MUST BE SPECIFIED

BASE MACHINE				**GROUP 01**
MF2946A~M205	700961479YF	2946A Round Baler		45,487.00
MF2946A~M201	700961481YF	2946A Round Baler with Silage		47,210.00
TIRES AND AXLES				**GROUP 02**
B111	700956146	14L-16.1 with Standard Axle		**In Base**
B113	700956182	21.5L-16.1 with Suspension Axle		
DRIVELINE				**GROUP 03**
LA47	700955626	540 RPM PTO		**In Base**
LA50	700955627	1000 RPM PTO		No Charge
BALE EJECTION				**GROUP 04**
B603	700956240	Hydraulic Kicker		No Charge
B602	700955603	Less Kicker (requires 700959586M- Bale Ramp Kit)		(2,547.00)
TWINE / MESH WRAP				**GROUP 05**
B103	Standard*	Twine and Mesh Included In Base		**In Base**
B101	700955628	Twine Tie (Less Mesh)		(5,354.00)
B102	700956140*	Mesh Wrap (Less Twine Tie)		(2,195.00)

*Requires B603, 700956241 Kicker or 700959586M - Bale Ramp Kit

BALE CONTROL MONITOR - FIELD INSTALLED **GROUP 98**

Includes harness, power adapter and hardware to mount Console inside the tractor cab.
Required for tractors not equipped with ISO 11783 plug and Console.

	700957986M	C1000 Monitor		2,915.00

For Information on AGCO Hay Preservative and Applicators For Balers, See Pages 84 & 85.

HESSTON by MASSEY FERGUSON

2946A ROUND BALER

Order Code	Catalog Number	Description	Approx. Weight(lb)	List Price
FIELD INSTALLED KITS- (order as desired)				**GROUP 99**
	MK51249	Harness, Switched Power (To Hook Console Directly to Battery)		180.00
	MK50556	Fire Extinguisher Kit	17	533.00
	MK51018	Remote Start Switch		99.00
	700958056M	Silage Kit		1,040.00
	700958062M	Twine Tie Addition Kit		2,131.00
	700959490M	Mesh Wrap		5,592.00
	700958130M	Soft Core Bale Kit		114.00
	700958016M	Short Crop Kit		275.00
	700958020M	Light Kit		117.00
	700959621M	Solid Windguard (Residue Crop)		656.00
	700959586M	Bale Ramp Kit		757.00
	700961568M*	Solid Windguard Kit		487.00
	700961570M	Roller Windguard Kit		362.00
	71428520M	Ship Safe Preservative Coating (Factory Applied) (Recommended for shipments occurring in November through March 31ST)		586.00

*Note: Updated Solid Windguard Kit to Allow Roller Attachment

ORDER FROM PARTS

	700741518	French Operators Manual and Decal Kit	2	No Charge
	700741520	Spanish Operators Manual and Decal Kit	2	No Charge

Note: To Convert from 540 PTO to 1000 PTO order 1-3/8” 21 Spline Yoke (700 733 694) or 1-3/4” 20 Spline Yoke (700 733 702) from Parts.

Mississippi State Contract Discount: 10%

HESSTON by MASSEY FERGUSON

2946 ROUND BALER

FOB Hesston, KS

STANDARD EQUIPMENT

46.5" (1.2m) Wide x 72" (1.8m) Diameter Bale
65" (1.7m) Wide Pickup Assembly - Dual CamTrack Tine Control
Pickup Wind Guard
Slip Clutch with Hydraulic Declutcher
Bale Counter
Bale Size Indicator
"Bale Full" Audio and Visual Alert
3 Bar Color Coded Bale Shape Indicator
Direct Feed, Rotor, Open Throat Chamber
540/1000 RPM PTO Drive
Hydraulic Pickup Lift
Extra Mesh Roll Storage
Over the Edge Mesh Wrap Capabilities
Twine Tie and Mesh Wrap
QCS - Quad Cylinder Bale Density System
Automatic Tying when Preset Bale Size is reached
with Manual Override
Tires:
14Lx16.1 Std.
21.5L 16.1 Opt.
Dual Tube Twine Arm
Staggered Belt Clean Out
Wedge Grip Belts with Alligator Lacings
Electrically Activated Twine and Mesh Wrap Systems
Safety Chain
Warning Light (Flashing)

Tractor Requirements
70 PTO HP (minimum)
Two Double Acting Remote Valves
Bale Control Monitor required to Operate Baler
See Group 98

Order Code	Catalog Number	Description	Approx. Weight(lb)	List Price
		ONE ITEM FROM EACH GROUP MUST BE SPECIFIED		
BASE MACHINE				**GROUP 01**
MF2946~M205	700961475YF	2946 Round Baler		40,365.00
MF2946~M201	700961477YF	2946 Round Baler with Silage		42,105.00
TIRES AND AXLES				**GROUP 02**
B111	700956146	14L-16.1 with Standard Axle		**In Base**
B113	700956182	21.5L-16.1 with Suspension Axle		
DRIVELINE				**GROUP 03**
LA47	700955626	540 RPM PTO		**In Base**
LA50	700955627	1000 RPM PTO		No Charge
BALE EJECTION				**GROUP 04**
B602	700955603	Less Kicker		No Charge
B601	700956153	Kicker		2,547.00
TWINE / MESH WRAP				**GROUP 06**
B103	Standard*	Twine and Mesh Included In Base		**In Base**
B101	700955628	Twine Tie (Less Mesh)		(5,354.00)
B102	700956140*	Mesh Wrap (Less Twine Tie)		(2,195.00)

*Requires B601, 700956153 Kicker or 700959586M - Bale Ramp Kit

BALE CONTROL MONITOR - FIELD INSTALLED **GROUP 98**

Includes harness, power adapter and hardware to mount Console inside the tractor cab.
Required for tractors not equipped with ISO 11783 plug and Console.

	700957986M	C1000 Monitor	2,915.00

For Information on AGCO Hay Preservative and Applicators For Balers, See Pages 84 & 85.

HESSTON by MASSEY FERGUSON

2946 ROUND BALER

Order Code	Catalog Number	Description	Approx. Weight(lb)	List Price
FIELD INSTALLED KITS- (order as desired)				**GROUP 99**
	MK51249	Harness, Switched Power (To Hook Console Directly to Battery)		180.00
	MK50556	Fire Extinguisher Kit	17	533.00
	MK51018	Remote Start Switch		99.00
	700957930M	Bale Kicker Kit		2,547.00
	700958056M	Silage Kit		1,040.00
	700958062M	Twine Tie Addition Kit		2,131.00
	700959490M	Mesh Wrap		5,592.00
	700958129M	Soft Core Bale Kit		215.00
	700958020M	Light Kit		117.00
	700958016M	Short Crop Kit		275.00
	700959621M	Solid Windguard (Residue Crop)		656.00
	700959586M	Bale Ramp Kit		757.00
	700961568M*	Solid Windguard Kit		487.00
	700961570M	Roller Windguard Kit		362.00
	71428520M	Ship Safe Preservative Coating (Factory Applied) (Recommended for shipments occurring in November through March 31ST)		586.00

*Note: Updated Solid Windguard Kit to Allow Roller Attachment

ORDER FROM PARTS

	700741518	French Operators Manual and Decal Kit	2	No Charge
	700741520	Spanish Operators Manual and Decal Kit	2	No Charge

Note: To Convert from 540 PTO to 1000 PTO order 1-3/8” 21 Spline Yoke (700 733 694) or 1-3/4” 20 Spline Yoke (700 733 702) from Parts.

Mississippi State Contract Discount: 10%

1734 ROUND BALER

FOB Hesston, KS

STANDARD EQUIPMENT

Direct Feed, Open Throat Chamber
39" (1m) Wide Bale
52" (1.3m) Diameter Bale
34" (.9m) (Tine to Tine) Wide Pickup
2.6" (.1m) Spacing between Tines
Five Minirough Belts, 4.8" (.1m) Wide
Manual Lift on Pickup
Rope Activated Manual Twine Threader
Dual Tube Twine Arm
Automatic Twine Cutoff
Twine Capacity - 2 Balls of Twine
Removable Pickup Windguard

540 RPM PTO Drive
"Sure-Trac" Crowned Drive Roll
7.60 x 15 6 ply Tires
Bale Size Indicator
Mechanical "Bale Full" Alert
Bale Counter
Safety Chain
Transport Light (Flashing)

Tractor Requirements
30 PTO HP (minimum)
One Double Acting Remote Valve

Order Code	Catalog Number	Description	Approx. Weight(lb)	List Price
		ONE ITEM FROM EACH GROUP MUST BE SPECIFIED UNLESS NOTED OTHERWISE		
BASE MACHINE				**GROUP 01**
MF1734	700960232YF	1734 Round Baler	2780	17,599.00
FIELD INSTALLED KITS - (order as desired)				**GROUP 99**
	MKD50641	Bale Ramp Kit	55	440.00
	MKD51156	Gathering Wheels Kit	178	1,246.00
	MKD51065	Electric Threader Kit	20	912.00
	MKD50556	Fire Extinguisher Kit	17	533.00
	71428520M	Ship Safe Preservative Coating (Factory Applied) (Recommended for shipments occurring in November through March 31ST)		586.00
ORDER FROM PARTS				
	700728890	Spanish Operators Manual and Decal Kit	2	No Charge
	700728891	French Operators Manual and Decal Kit	2	No Charge

For Information on AGCO Hay Preservative and Applicators For Balers, See Pages 84 & 85.

Mississippi State Contract Discount: 10%

HESSTON by MASSEY FERGUSON

1745 ROUND BALER

FOB Hesston, KS

STANDARD EQUIPMENT

Direct Feed, Open Throat Chamber
46.5" (1.2m) Wide Bale
62" (1.6m) Diameter Bale
44.17" (1.1m) Wide Pickup
2.6" (.1m) Spacing between Tines
Six Wedge Grip Belts, 6.9" Wide
Manual Lift on Pickup
Electric Twine Threader
Dual Tube Twine Arm
Automatic Twine Cutoff
Twine Capacity - 4 Balls of Twine
Pickup Windguard

540 RPM PTO Drive
"Sure-Trac" Crowned Drive Roll
31-13.5 x 15 Standard or
14L x 16.1 Optional Tires
Bale Size Indicator
Transport Light (Flashing)
Safety Chain
Bale Full Alert and Tailgate Latch Indicator

Tractor Requirements
40 PTO HP (minimum)
One Double Acting Remote Valve

Order Code	Catalog Number	Description	Approx. Weight(lb)	List Price
		ONE ITEM FROM EACH GROUP MUST BE SPECIFIED UNLESS NOTED OTHERWISE		
BASE MACHINE				**GROUP 01**
MF1745	700960234YF	1745 Round Baler		22,675.00
TIRES				**GROUP 02**
B106	700956009	31 x 13.5-15		**In Base**
B105	700956010	14L x 16.1		439.00
CONTROLLER				**GROUP 03**
B302	700957441	Manual Controller (Twine Only)✶		**In Base**
B304	700957443	Deluxe Auto Tie Controller (Twine and Mesh)		1,423.00
✶Manual Controller Balers cannot be upgraded to Mesh Controller				
MESH WRAP				**GROUP 04**
B101	700957444	Less Mesh Wrap (Twine Only)		**In Base**
B102	700957445	Mesh Wrap (Twine and Mesh)⦿		4,637.00
BALE EJECTION				**GROUP 05**
		Less Kicker		**In Base**
B601	700957448	Kicker⦿		2,547.00
FIELD INSTALLED KITS - (order as desired)				**GROUP 99**
	MKD50556	Fire Extinguisher Kit	17	533.00
	MK51266	Gathering Wheels Kit	217	1,226.00
	MK51270	Bale Ramp Kit (2008 and Newer)	66	574.00
	MKD51092	Bale Counter Kit	5	73.00
	MKD51159	Starting Roll Scraper		143.00
	700957454M	Hydraulic Kicker Kit⦿		2,173.00
	700959483M	Mesh Wrap⦿		4,870.00
	700957455M	Bale Shape Kit⦿		464.00
	71428520M	Ship Safe Preservative Coating (Factory Applied) (Recommended for shipments occurring in November through March 31ST)		586.00
ORDER FROM PARTS				
	700724299	Optional Adjustable Density Valve		Order from Parts
	700735402	French Operators Manual and Decal Kit	2	No Charge
	700735405	Spanish Operators Manual and Decal Kit	2	No Charge

⦿Requires Deluxe Autotie Controller (Twine and Mesh)
For Information on AGCO Hay Preservative and Applicators For Balers, See Pages 84 & 85.

HESSTON by MASSEY FERGUSON

SMALL / MEDIUM SQUARE BALERS

HESSTON by MASSEY FERGUSON

SMALL / MEDIUM RECTANGULAR BALERS

FOB Hesston, KS

PRODUCT INFORMATION

	1844S/1844N	1841	1840	1838	1836
BALE SIZE					
Height	15" (.4m)	16" (.4m)	14" (.4m)	14" (.4m)	14" (.4m)
Width	22" (.6m)	18" (.5m)	18" (.5m)	18" (.5m)	18" (.5m)
Length	12"-52" (.3m to 1.3m)	12"-52" (.3m to 1.3m)	12"-52" (.3m to 1.3m)	12"-52" (.3m to 1.3m)	12"-52" (.3m to 1.3m)
PICK-UP					
Width - Tine to Tine	70" (1.8m)	70" (1.8m)	70" (1.8m)	70" (1.8m)	55" (1.4m)
No. of Tine Bars	4	4	4	3	3
No. of Double Tines	56	56	56	42	33
TIRES	14Lx16.1	31x13.5-15	31x13.5-15	11Lx14	9.5Lx14
TRACTOR REQUIREMENTS					
Horsepower	75	50	50	35	35
PTO	1000	540	540	540	540

NOTE: This is a general sales guide; for further product details and official specifications refer to product information guides and product literature.

Mississippi State Contract Discount: 10%

HESSTON by MASSEY FERGUSON

1844 MEDIUM RECTANGULAR BALER

FOB Hesston, KS

STANDARD EQUIPMENT

1844S MEDIUM RECTANGULAR BALER

Three Twine Baler - PTO Powered
Hydraulic Density Control Top, Bottom and Side Rails
Bale Weight up to 180 lbs.
91.2" (2.3m) Pickup (Outside Panel to Panel)
with 4 Bars and 56 Double Tines
Twine Boxes - 12 Ball Capacity
Twine Requirements - Heavy Duty Plastic or Sisal
1000 RPM Double Reduction Hypoid Gearbox
Two Gauge Wheels
6 Stuffer Tines
Plunger Speed 90 Strokes per Minute
Plunger Stroke 21.9" Long
14L x 16.1, 12 ply Flotation Tires
Bale Formation Kit
Bale Size:
Height - 15" (.4m)
Width - 22" (.6m)
Length - Adjustable 12" to 52" (.3m to 1.3m)
Lights for Night Operation
2-5/16" Ball Hitch

Tractor Requirements: 80 PTO HP

1844N MEDIUM RECTANGULAR BALER

Three Twine Baler- PTO Powered
Hydraulic Density Control Top, Bottom and Side Rails
Bale Weight up to 180 lbs.
91.2" (2.3m) Pickup (Outside Panel to Panel)
with 4 Bars and 56 Double Tines
Twine Boxes - 12 Ball Capacity
Twine Requirements - Heavy Duty Plastic or Sisal
1000 RPM Double Reduction Hypoid Gearbox
Two Gauge Wheels
8 Stuffer Tines
Plunger Speed 90 Strokes per Minute
Plunger Stroke 21.9" Long
14L x 16.1, 12 ply Flotation Tires
Bale Size:
Height - 16" (.4m)
Width - 22" (.6m)
Length - Adjustable 12" to 52" (.3m to 1.3m)
Lights for Night Operation
2-5/16" Ball Hitch

Tractor Requirements: 80 PTO HP

Order Code	Catalog Number	Description	Approx. Weight(lb)	List Price
		ONE ITEM FROM EACH BOX MUST BE SPECIFIED UNLESS NOTED OTHERWISE		
BASE MACHINE				**GROUP 01**
MF1844S	700960222YF	1844S Three-Twine Medium Rectangular PTO Baler		74,116.00
MF1844N	700960223YF	1844N Three-Twine Medium Rectangular PTO Baler		74,116.00
FIELD INSTALLED KITS - (order as desired)				**GROUP 99**
	MK41222	Tandem Wheel Kit, 12.5L - 15	500	2,209.00
	71428520M	Ship Safe Preservative Coating (Factory Applied). . . . . (Recommended for shipments occurring in November through March 31ST)		586.00
ORDER FROM PARTS				
	700736613	French Operators Manual	2	No Charge
	700736614	Spanish Operators Manual	2	No Charge

For Information on AGCO Hay Preservative and Applicators For Balers, See Pages 84 & 85.

Mississippi State Contract Discount: 10%

HESSTON by MASSEY FERGUSON

1841 MEDIUM RECTANGULAR BALER

FOB Hesston, KS

STANDARD EQUIPMENT

16" x 18" (.4m x .5m) Bale Chamber
Equal Angle Hitch with 4-Joint Driveline and Overrunning Clutch
Heavy Duty Hypoid Gearbox
91.2" (2.3m) Pickup (outside Panel to Panel) with 4 Bars and 56 Double Tines
Two Pickup Gauge Wheels
Brackets to accommodate ASAE Standard Bale Counter
Safety Chain
Parking Jack
31 x 13.5-15, 8 Ply Flotation Tires

Adjustable Bale Length 12" to 52" (.3m to 1.3m)
100 Strokes per minute Plunger mounted on 8 Ball Bearing Rollers
Twine Knotters
Center-Line Feed System
Hydraulic Bale Density Control
Twine Storage Box - 6 Ball Capacity

Hydraulic Pick-up Lift
Tractor Requirements
50 PTO HP (minimum)
540 RPM PTO
Double Acting Remote Valve

Order Code	Catalog Number	Description	Approx. Weight(lb)	List Price
		ONE ITEM FROM EACH GROUP MUST BE SPECIFIED UNLESS NOTED OTHERWISE		
BASE MACHINE				**GROUP 01**
MF1841	700960219YF	1841 Twine Tie Baler	4375	35,948.00
FIELD INSTALLED KITS - (order as desired)				**GROUP 99**
	MKD40416	Bale Chute Kit	28	152.00
	MKD40417	Bale Chute Extension Kit (For use with MKD40416, Bale Chute)	47	172.00
	MKD50391	Bale Chute Quarter Turn Kit	78	461.00
	MKD40291	Field Light Kit	7	252.00
	MKD40582	Knotter Lubrication System Kit	9	1,382.00
	71428520M	Ship Safe Preservative Coating (Factory Applied) (Recommended for shipments occurring in November through March 31ST)		586.00
ORDER FROM PARTS				
	700729992	French Operators Manual and Decal Kit	2	No Charge
	700729993	Spanish Operators Manual and Decal Kit	2	No Charge

For Information on AGCO Hay Preservative and Applicators For Balers, See Pages 84 & 85.

Mississippi State Contract Discount: 10%

HESSTON by MASSEY FERGUSON

1840 SMALL RECTANGULAR BALER

FOB Hesston, KS

STANDARD EQUIPMENT

14" x 18" (.4m x .5m) Bale Chamber
U-Joint - Constant Velocity 3-Joint Driveline and Overrunning Clutch
Hypoid Gearbox with Tapered Roller Bearings
89.13" (2.3) Pickup (outside Panel to Panel) with 4 Bars and 56 Double Tines
Two Pickup Gauge Wheels
Equal Weight Distribution on both Wheels
Manual Pickup Lift
Safety Chain
Parking Jack
31 x 13.5 - 15, 8P Tires

Adjustable Bale Length 12" to 52" (.3m to 1.3m)
100 Strokes per minute Plunger mounted on 8 Sealed Ball Bearing Rollers
Center Line Feed System
Extension Spring Bale Tensioning
Twine Storage Box - 10 Ball Capacity
Bale Counter

Tractor Requirements
50 PTO HP (minimum)
540 RPM PTO

ONE ITEM FROM EACH GROUP MUST BE SPECIFIED UNLESS NOTED OTHERWISE

Order Code	Catalog Number	Description	Approx. Weight(lb)	List Price
BASE MACHINE				**GROUP 01**
MF1840-Q201	700961794	1840 Small Rectangular Baler- Twine		27,788.00
UPGRADE PACKAGE				**GROUP 02**
Q301 Q601	MKT0334	Standard Mechanical Package Includes: Mechanical Tensioner Less Knotter Blower		**In Base**
Q302 Q602	MKT0335	High Performance Package Includes: Hydraulic Tensioner Knotter Blower		1,675.00
TIRES				**GROUP 03**
B106	700901725	31 x 13.5-15		**In Base**
B103	700901788	11Lx14		No Charge
FIELD INSTALLED KITS - (order as desired)				**GROUP 99**
	MKD40416	Bale Chute Kit	28	152.00
	MKD40417	Bale Chute Extension Kit (For use with MKD40416, Bale Chute)	47	172.00
	MKD50391	Bale Chute Quarter Turn Kit	78	461.00
	700959759M	Knotter Blower Kit		307.00
	700962517M	Hydraulic Bale Tension Kit		66
1,489.00				
	MKD40555	Hydraulic Pickup Lift Kit (Requires one Double Acting Remote Valve)	10	410.00
	700961890M	Wagon Hitch Kit		870.00
	MKD40445	Field Light Kit	10	254.00
	700959756M	Bale Thrower Kit with Electronic Speed Control (Order Separately)	510	7,719.00
	71428520M	Ship Safe Preservative Coating (Factory Applied) (Recommended for shipments occurring in November through March 31.)		586.00
ORDER FROM PARTS				
	700741546	French Operators Manual and Decal Kit	2	No Charge
	700741548	Spanish Operators Manual and Decal Kit	2	No Charge

For Information on AGCO Hay Preservative and Applicators For Balers, See Pages 84 & 85.

HESSTON by MASSEY FERGUSON

1838 SMALL RECTANGULAR BALER

FOB Hesston, KS

STANDARD EQUIPMENT

14" x 18" (.4m x .5m) Bale Chamber
U-Joint - Constant Velocity 3-Joint Driveline and Overrunning Clutch
Hypoid Gearbox with Tapered Roller Bearings
89.13" (2.3) Pickup (outside Panel to Panel) with 3 Bars and 42 Double Tines
Two Pickup Gauge Wheels
Equal Weight Distribution on both Wheels
Manual Pickup Lift
Safety Chain
Parking Jack

Adjustable Bale Length 12" to 52" (.3m to 1.3m)
100 Strokes per minute Plunger mounted on 7 Sealed Ball Bearing Rollers
Twine Knotters
Center Line Feed System
Extension Spring Bale Tensioning
Twine Storage Box - 6 Ball Capacity
Bale Counter

Tractor Requirements
35 PTO HP (minimum)
540 RPM PTO

ONE ITEM FROM EACH GROUP MUST BE SPECIFIED UNLESS NOTED OTHERWISE

Order Code	Catalog Number	Description	Approx. Weight(lb)	List Price
BASE MACHINE				**GROUP 01**
MF1838	700961786	1838 Small Rectangular Baler		24,885.00
TIRES				**GROUP 02**
B103	700903554	11L x 14		No Charge
KNOTTER BLOWER				**GROUP 03**
Q601	700960991	Less Blower		**In Base**
Q602	700959753	Knotter Blower		332.00
FIELD INSTALLED KITS - (order as desired)				**GROUP 99**
	MKD40416	Bale Chute Kit	28	152.00
	MKD40417	Bale Chute Extension Kit (For use w/ MKD40416, Bale Chute).	47	172.00
	MKD50391	Bale Chute Quarter Turn Kit	78	461.00
	700961890M	Wagon Hitch Kit	95	870.00
	700962517M	Hydraulic Bale Tension Kit	66	1,489.00
	MKD40422	Hydraulic Pickup Lift Kit (Requires one Double Acting Remote Valve)	16	404.00
	MKD40445	Field Light Kit	10	254.00
	MKD40634	Bale Thrower Kit with Electronic Speed Control. (Order Separately)	510	7,719.00
	71428520M	Ship Safe Preservative Coating (Factory Applied). (Recommended for shipments occurring in November through March 31ST)		586.00
ORDER FROM PARTS				
	700726939	French Operators Manual and Decal Kit	2	No Charge
	700726940	Spanish Operators Manual and Decal Kit	2	No Charge

For Information on AGCO Hay Preservative and Applicators For Balers, See Pages 84 & 85.

Mississippi State Contract Discount: 10%

1836 SMALL RECTANGULAR BALER

FOB Hesston, KS

STANDARD EQUIPMENT

14" x 18" (.4m x .5m) Bale Chamber
U-Joint - Constant Velocity 3-Joint Driveline and Overrunning Clutch
Hypoid Gearbox with Tapered Roller Bearings
73.5" (1.9m) Pickup (outside Panel to Panel) with 3 Bars and 33 Double Tines
Two Pickup Gauge Wheels
Equal Weight Distribution on both Wheels
Manual Pickup Lift
Safety Chain
Parking Jack

Adjustable Bale Length 12" to 52" (.3m to 1.3m)
92 Strokes per minute Plunger mounted on 7 Sealed Ball Bearing Rollers
Twine Knotters
Center Line Feed System
Extension Spring Bale Tensioning
Twine Storage Box - 4 Ball Capacity
Bale Counter

Tractor Requirements
35 PTO HP (minimum)
540 RPM PTO

Order Code	Catalog Number	Description	Approx. Weight(lb)	List Price
		ONE ITEM FROM EACH GROUP MUST BE SPECIFIED UNLESS NOTED OTHERWISE		
BASE MACHINE				**GROUP 01**
MF1836	700961787	1836 Small Rectangular Baler		22,772.00
TIRES				**GROUP 02**
B102	700903550	9.5L x 14 Floatation Tires		**In Base**
B101	700901531	7.60 x 15 Standard Tires		No Charge
KNOTTER BLOWER				**GROUP 03**
Q601	700960991	Less Blower		**In Base**
Q602	700959753	Knotter Blower		332.00
FIELD INSTALLED KITS - (order as desired)				**GROUP 99**
	MKD40416	Bale Chute Kit	28	152.00
	MKD40417	Bale Chute Extension Kit (For use w/ MKD40416, Bale Chute).	47	172.00
	MKD50391	Bale Chute Quarter Turn	78	461.00
	700961890M	Wagon Hitch Kit	95	870.00
	700962517M	Hydraulic Bale Tension Kit	66	1,489.00
	MKD40422	Hydraulic Pickup Lift Kit (Requires one Double Acting Remote Valve)	16	404.00
	MKD40445	Field Light Kit	10	254.00
	MKD40634	Bale Thrower Kit with Electronic Speed Control. (Order Separately)	510	7,719.00
	71428520M	Ship Safe Preservative Coating (Factory Applied) (Recommended for shipments occurring in November through March 31ST)		586.00
ORDER FROM PARTS				
	700726939	French Operators Manual and Decal Kit	2	No Charge
	700726940	Spanish Operators Manual and Decal Kit	2	No Charge

For Information on AGCO Hay Preservative and Applicators For Balers, See Pages 84 & 85.

Reserved

LARGE SQUARE BALERS

HESSTON by MASSEY FERGUSON

LARGE RECTANGULAR BALERS

FOB Hesston, KS

PRODUCT INFORMATION

	2290	2270XD	2270	2250
BALE SIZE				
Width:	47.2" (1.2m)	47.2" (1.2m)	47.2" (1.2m)	31.5" (.8m)
Height:	50" (1.3m)	34.4" (.9m)	34.4" (.9m)	34.4" (.9m)
Length:	Up to 108" (2.7m)	Up to 108" (2.7m)	Up to 108" (2.7m)	Up to 108" (2.7m)
*Weight:	Up to 2,000 lbs. (907kg)	Up to 1,700 lbs. (771kg)	Up to 1,500lbs. (680kg)	Up to 1,000 lbs (454kg)
PICK-UP				
Width-Tine to Tine:	80.6" (2m)	80.6" (2m)	80.6" (2m)	80.6" (2m)
Tine Spacing:	2.6" (.1m)	2.6" (.1m)	2.6" (.1m)	2.6" (.1m)
No. of Tine Bars	4	4	4	4
No. of Tines	128	128	128	128
TIRES				
Single Axle	28Lx26	700/50-22.5	700/50-22.5	600/50x22.5
Tandem Axle	500/45x22.5	500/45x22.5	500/45x22.5	550/50x17
TRACTOR REQUIREMENTS				
Horsepower Minimum (Non cutter)	150 HP (101 kw)	150 HP (101 kw)	130 HP (97 kw)	120 HP (90 kw)
Recommended	180 HP (112 kw)	180 HP (112 kw)	170 HP (112 kw)	150 HP (112 kw)
PTO	1000 RPM	1000 RPM	1000 RPM	1000 RPM
Hydraulics	One Single Acting Remote Valve	One Single Acting Remote Valve	One Single Acting Remote Valve	One Single Acting Remote Valve

*** Weight determined in Alfalfa crop at ideal moisture level.**

NOTE: This is a general sales guide; for further product details and official specifications refer to product information guides and product literature.

Mississippi State Contract Discount: 10%

HESSTON by MASSEY FERGUSON

2290 LARGE RECTANGULAR BALER

FOB Hesston, KS

STANDARD EQUIPMENT

47.2" x 50" (1.2m x 1.3m) Bale Chamber
102.2" (2.6m) OptiForm ™ Wide Pickup with Gathering Augers, Gauge Wheels and Hydraulic Lift
Knotter Fan
Bale Counter (in Monitor)
Bale Length Adjustable Up to 108" (2.7m)
Automatic Knotter Lube
Plunger Speed 33 Strokes per minute
Plunger Stroke 32.8" (.8m) Long
Tying Mechanism - 6 Heavy Duty Double Knotters
Lights for Night Operation
Warning Lights
Parking Jack
Safety Chain
Ejector Standard on Cutter Balers
Selectable Bale Ejection- Partial or Full
E-Coat Primer with Powder Paint
Removable Gauge Wheel
Roller Windguard
Twine Requirements - Heavy Duty Plastic
Fork Type Feed System Packing into Separate Charge Chamber
Bale Case Compression - 2 Hydraulic Cylinders Provide Compression to Top and Side Members
Automatic Density Control Monitors Plunger and Automatically Controls Hydraulic Cylinders on Bale Base
Twine Boxes - 30 Ball Capacity
On-Board Hydraulic System
Silage Ready (Roller Chute Recommended)
Folding Safety Rails

Tractor Requirements
150 PTO HP (minimum), 180 HP Recommended
1000 RPM
One Double Acting Remote Valve (Pick-up)
One Single Acting Remote Valve (Tandem Option)
Bale Control Monitor required to Operate Baler (See Group 98)

Order Code	Catalog Number	Description	Approx. Weight(lb)	List Price
		ONE ITEM FROM EACH GROUP MUST BE SPECIFIED UNLESS NOTED OTHERWISE		
BASE MACHINE				**GROUP 01**
MF2290-Q703	700960802YF	2290 Large Rectangular Baler	11360	172,417.00
MF2290-Q701	700961053YF	2290 Large Rectangular Baler with Cutter and Ejector. . . .		192,639.00
AXLE				**GROUP 02**
50-Q501	700956293	Single Axle with 28L x 26, 16 Ply Tires, Less Brakes		**In Base**
50-Q503	700956294	Single Axle with 28L x 26, 16 Ply Tires with Hyd. Brakes . .		3,206.00
50-Q502	700960751	Tandem Axle w/ 500/45x22.5, 16 Ply Tires, Less Brakes. .	1780	10,046.00
50-Q504	700960752	Tandem Axle w/ 500/45x22.5, 16 Ply Tires w/ Hyd. Brakes	1780	15,971.00
TIRE UPGRADE - OPTIONAL				**GROUP 03**
75-B114	700960779	Upgrade to 620/40R X 22.5 tires (Tandem Axle only)		4,354.00
LUBRICATION- OPTIONAL				**GROUP 04**
30-B901	700961596	Automatic Chain Lubrication System - Packer		1,237.00
30-B902	700961597	Automatic Chain Lubrication System - Cutter.		1,575.00
EJECTOR- OPTIONAL				**GROUP 05**
25-Q902	700960986	Ejector (For Non-Cutter Balers)		3,257.00

HESSTON by MASSEY FERGUSON

2290 LARGE RECTANGULAR BALER

Order Code	Catalog Number	Description	Approx. Weight(lb)	List Price
DRIVELINE- FIELD INSTALLED - Required				**GROUP 06**
	MK41290	Type 2, 1-3/8" 21-Tooth PTO	50	726.00
	MK41213	Type 3, 1-3/4" 20-Tooth PTO	50	1,162.00
BALE CONTROL MONITOR - FIELD INSTALLED				**GROUP 98**
Includes harness, power adapter and hardware to mount Console inside the tractor cab. Required for tractors not equipped with ISO 11783 plug and Console.				
	700957986M	C1000 Monitor		2,915.00
FIELD INSTALLED KITS - (order as desired)				**GROUP 99**
	MK41208	Flat Bale Chute (Required if AC25 Bale Accumulator is not used)		1,395.00
	700960976M	Roller Bale Chute (2200 series only)		2,647.00
	700960798M	Bale Weight Kit (Requires Module Kit - 700960668M)		1,632.00
	700960668M	Module Kit.		882.00
	700960673M	Hydraulic Jack Kit		965.00
	700960974M	Bale Ejector Kit		3,257.00
	700961791M	Chain Lube Kit for Packer Baler		1,372.00
	700961792M	Chain Lube Kit for Cutter Baler		1,718.00
	71427873M	Ship Safe Preservative Coating (Factory Applied) (Recommended for shipments occurring in November through March 31ST)		
ORDER FROM PARTS				
	72570307	Telemetry-STD Plus	ORDER FROM PARTS	
	700179375	Telemetry-Installation Kit	ORDER FROM PARTS	
	700741496	French Operators Manual and Decal Kit.	2	No Charge
	700741497	Spanish Operators Manual and Decal Kit	2	No Charge

For Information on AGCO Hay Preservative and Applicators For Balers, See Pages 84 & 85.

HESSTON by MASSEY FERGUSON

2270 LARGE RECTANGULAR BALER

FOB Hesston, KS

STANDARD EQUIPMENT

47.2" x 34.4" (1.2m x .9m) Bale Chamber
102.2" (2.6m) Wide Pickup with Gathering Augers, Gauge Wheels and Hydraulic Lift
Knotter Fan
Bale Counter (in Monitor)
Bale Length Adjustable Up to 108" (2.7m)
Automatic Knotter Lube
Plunger Speed: 47 Strokes per minute
Plunger Stroke: 29.1" (.7m) Long
Tying Mechanism - 6 Heavy Duty Double Knotters
Lights for Night Operation
Warning Lights
Parking Jack
Safety Chain
Bale Ejection
Selectable Bale Ejection- Partial or Full
E-Coat Primer with Powder Paint
Removable Gauge Wheel
Roller Windguard
Twine Requirements - Heavy Duty Plastic
Fork Type Feed System Packing into Separate Charge Chamber
Bale Case Compression - 2 Hydraulic Cylinders Provide Compression to Top and Side Members
Automatic Density Control Monitors Plunger and Automatically Controls Hydraulic Cylinders on Bale Base
Twine Boxes - 30 Ball Capacity
On-Board Hydraulic System
Silage Ready (Roller Chute Recommended)
Folding Safety Rails

Tractor Requirements
130 PTO HP (minimum), 1000 RPM
170 PTO HP (minimum), 1000 RPM, for Cutter Units
One Double Acting Remote Valve (Pick-up)
One Single Acting Remote Valve (Tandem Option)
Bale Control Monitor required to Operate Baler (See Group 98)

Order Code	Catalog Number	Description	Approx. Weight(lb)	List Price
		ONE ITEM FROM EACH GROUP MUST BE SPECIFIED UNLESS NOTED OTHERWISE		
BASE MACHINE				**GROUP 01**
MF2270-Q703	700961726YF	2270 Large Rectangular Baler	11360	143,260.00
MF2270-Q701	700961727YF	2270 Large Rectangular Baler with Cutter		160,046.00
AXLE				**GROUP 02**
50-Q501	700958765	Single Axle with 700/50-22.5, 16 Ply Tires, Less Brakes . .		**In Base**
50-Q503	700958766	Single Axle with 700/50-22.5, 16 Ply Tires w/ Hyd. Brakes.		3,152.00
50-Q502	700960786	Tandem Axle w/ 500/45x22.5, 12 Ply Tires, Less Brakes. .	1780	9,862.00
50-Q504	700960787	Tandem Axle w/ 500/45x22.5, 12 Ply Tires w/ Hyd. Brakes	1780	15,678.00
TIRE UPGRADE - OPTIONAL				**GROUP 03**
75-B114	700960779	Upgrade to 620/40R X 22.5 tires (Tandem Axle only)		4,354.00
LUBRICATION- OPTIONAL				**GROUP 06**
30-B901	700961596	Automatic Chain Lubrication System - Packer		1,237.00
30-B902	700961597	Automatic Chain Lubrication System - Cutter.		1,575.00

HESSTON by MASSEY FERGUSON

2270 LARGE RECTANGULAR BALER

Order Code	Catalog Number	Description	Approx. Weight(lb)	List Price
DRIVELINE- FIELD INSTALLED - Required				**GROUP 09**
	MK41290	Type 2, 1-3/8" 21-Tooth PTO	50	726.00
	MK41213	Type 3, 1-3/4" 20-Tooth PTO	50	1,162.00
BALE CONTROL MONITOR - FIELD INSTALLED				**GROUP 98**
Includes harness, power adapter and hardware to mount Console inside the tractor cab. Required for tractors not equipped with ISO 11783 plug and Console.				
	700957986M	C1000 Monitor		2,915.00
FIELD INSTALLED KITS - (order as desired)				**GROUP 99**
	700960673M	Hydraulic Jack Kit		965.00
	700960800M	Bale Weight Kit (Requires Module Kit -- 700960668M)		1,632.00
	700960668M	Module Kit		882.00
	700960977M	Roller Bale Chute (2200 series only)		2,647.00
	MK41208	Flat Bale Chute (Required if AC25 Bale Accumulator is not used)		1,395.00
	700961791M	Chain Lube Kit for Packer Baler		1,372.00
	700961792M	Chain Lube Kit for Cutter Baler		1,718.00
	71427873M	Ship Safe Preservative Coating (Factory Applied) (Recommended for shipments occurring in November through March 31ST)		
ORDER FROM PARTS				
	72570307	Telemetry-STD Plus	ORDER FROM PARTS	
	700179375	Telemetry-Installation Kit	ORDER FROM PARTS	
	700741496	French Operators Manual and Decal Kit	2	No Charge
	700741497	Spanish Operators Manual and Decal Kit	2	No Charge

For Information on AGCO Hay Preservative and Applicators For Balers, See Pages 84 & 85.

Mississippi State Contract Discount: 10%

HESSTON by MASSEY FERGUSON

2270XD LARGE RECTANGULAR BALER

FOB Hesston, KS

STANDARD EQUIPMENT

47.2" x 34.4" (1.2m x .9m) Bale Chamber
102.2" (2.6m) OptiForm ™ Wide Pickup with Gathering Augers, Gauge Wheels and Hydraulic Lift
Knotter Fan
Bale Counter (in Monitor)
Bale Length Adjustable Up to 108" (2.7m)
Automatic Knotter Lube
Plunger Speed: 47 Strokes per minute
Plunger Stroke: 29.1" (.7m) Long
Tying Mechanism - 6 Heavy Duty Double Knotters
Lights for Night Operation
Warning Lights
Parking Jack
Safety Chain
Bale Ejector
Selectable Bale Ejection- Partial or Full
E-Coat Primer with Powder Paint
Removable Gauge Wheel
Roller Windguard
Twine Requirements - Heavy Duty Plastic
Fork Type Feed System Packing into Separate Charge Chamber
Bale Case Compression - 2 Hydraulic Cylinders Provide Compression to Top and Side Members
Automatic Density Control Monitors Plunger and Automatically Controls Hydraulic Cylinders on Bale Base
Twine Boxes - 30 Ball Capacity
On-Board Hydraulic System
Silage Ready (Roller Chute Recommended)
Folding Top Rails

Tractor Requirements
160 PTO HP (minimum), 1000 RPM
One Double Acting Remote Valve (Pick-up)
One Single Acting Remote Valve (Tandem Option)
Bale Control Monitor required to Operate Baler
See Group 98

Order Code	Catalog Number	Description	Approx. Weight(lb)	List Price
		ONE ITEM FROM EACH GROUP MUST BE SPECIFIED UNLESS NOTED OTHERWISE		
BASE MACHINE				**GROUP 01**
MF2270XD~Q706	700960805YF	2270XD Large Rectangular Baler	17000	163,934.00
MF2270XD~Q710	700961015YF	2270XD Large Rectangular Baler with Cutter		180,515.00
AXLE				**GROUP 02**
50-Q501	700958765	Single Axle with 700/50-22.5, 16 Ply Tires, Less Brakes		**In Base**
50-Q503	700958766	Single Axle with 700/50-22.5, 16 Ply Tires . . . . . w/ Hyd. Brakes		3,152.00
50-Q502	700960786	Tandem Axle w/ 500/45x22.5, 12 Ply Tires, Less Brakes	1780	9,862.00
50-Q504	700960787	Tandem Axle w/ 500/45x22.5, 12 Ply Tires . . . . . w/ Hyd. Brakes	1780	15,678.00
TIRE UPGRADE - OPTIONAL				**GROUP 03**
75-B114	700960779	Upgrade to 620/40R X 22.5 tires (Tandem Axle only). . .		4,354.00
LUBRICATION- OPTIONAL				**GROUP 04**
30-B901	700961596	Automatic Chain Lubrication System - Packer		1,237.00
30-B902	700961597	Automatic Chain Lubrication System - Cutter		1,575.00

HESSTON by MASSEY FERGUSON

2270XD LARGE RECTANGULAR BALER

Order Code	Catalog Number	Description	Approx. Weight(lb)	List Price
DRIVELINE- FIELD INSTALLED - Required				**GROUP 05**
	700958792M	Type 3, 1-3/4" 20-Tooth PTO	50	1,162.00
BALE CONTROL MONITOR - FIELD INSTALLED				**GROUP 98**
Includes harness and hardware to mount C1000 Monitor inside the tractor cab. Required for tractors not equipped with ISO 11783 plug and C1000 Monitor.				
	700957986M	C1000 Monitor		2,915.00
FIELD INSTALLED KITS - (order as desired)				**GROUP 99**
	700960673M	Hydraulic Jack Kit		965.00
	700960977M	Roller Bale Chute (2200 series only)		2,647.00
	700960800M	Bale Weight Kit -(Requires Module Kit -700960668M)		1,632.00
	700960668M	Module Kit		882.00
	MK41208	Flat Bale Chute (Required if AC25 Bale Accumulator is not used)		1,395.00
	700961791M	Chain Lube Kit for Packer Baler		1,372.00
	700961792M	Chain Lube Kit for Cutter Baler		1,718.00
	71427873M	Ship Safe Preservative Coating (Factory Applied) (Recommended for shipments occurring in November through March 31)		
ORDER FROM PARTS				
	72570307	Telemetry-STD Plus	ORDER FROM PARTS	
	700179375	Telemetry-Installation Kit	ORDER FROM PARTS	
	700741496	French Operators Manual and Decal Kit	2	No Charge
	700741497	Spanish Operators Manual and Decal Kit	2	No Charge

For Information on AGCO Hay Preservative and Applicators For Balers, See Pages 84 & 85.

Mississippi State Contract Discount: 10%

HESSTON by MASSEY FERGUSON

2250 LARGE RECTANGULAR BALER

FOB Hesston, KS

STANDARD EQUIPMENT

31.5" x 34.4" (.8m x .9m) Bale Chamber
Bale Length Adjustable Up to 108" (2.7m)
Knotter Fan
Parking Jack
On-Board Hydraulic System
102.2" (2.6m) Wide Pickup w/ Gathering Augers, Gauge Wheels, and Hydraulic Lift
Fork Fed Charge Chamber
Plunger Speed - 47 Strokes per Minute
Plunger Stroke - 29.1" (.7m)
Automatic Density Control
Safety Chain
Folding Safety Rails
Lights for Night Operation
Selectable Bale Ejection- Partial or Full
E-Coat Primer with Powder Paint
Removable Gauge Wheel
Roller Windguard

Bale Chamber Compression - 2 Hydraulic Cylinders
Tying Mechanism - 4 Heavy Duty Double Knotters
Twine Boxes - 30 Ball Capacity
Twine Requirements - Heavy Duty Plastic
Automatic Knotter Lube
Bale Ejector
Silage Ready (Roller Chute Recommended)

Tractor Requirements
120 PTO HP (90 kw) (Minimum)
170 PTO HP (134 kw) (Minimum with Cutter)
1000 RPM PTO
One Double Acting Remote Valve (Pickup)
One Double Acting Remote Valve (Cutter Option)
One Single Acting Remote Valve (Tandem Option)
Bale Control Monitor required to operate Baler
See Group 98

2250 Packer Cutter ONLY
RC100H Roller Drive Chain
Drive Protection - Splined Slip Clutch
Three Oil Filled Bearing Boxes
Six Knives - 4.6" (.1m) Knife Spacing

Tractor Requirements
150 PTO HP (112 kw) (Minimum)
180 PTO HP (134 kw) (Minimum with Cutter)
1000 RPM PTO
One Double Acting Cylinder (Pickup)
One Double Acting Cylinder (Packer /Cutter)
One Single Acting Cylinder (Tandem Option)
Bale Control Monitor required to operate Baler
See Group 98

Order Code	Catalog Number	Description	Approx. Weight(lb)	List Price
		ONE ITEM FROM EACH GROUP MUST BE SPECIFIED UNLESS NOTED OTHERWISE		
BASE MACHINE				**GROUP 01**
MF2250~Q703	700960994YF	2250 Large Rectangular Baler		117,534.00
MF2250~Q701	700960995YF	2250 Large Rectangular Baler with Cutter		133,605.00
MF2250~Q705	700960734YF	2250 Packer Cutter Large Rectangular Baler		126,906.00
AXLE				**GROUP 02**
50-Q501	700958772	Single Axle with 600-50 x 22.5, 12 Ply Tires, Less Brakes		**In Base**
50-Q503	700958773	Single Axle with 600-50 x 22.5, 12 Ply Tires, with Hydraulic Brakes		3,103.00
50-Q502	700960783	Tandem Axle with 500-50 x 17, 16 Ply, Less Brakes		9,400.00
50-Q504	700960784	Tandem Axle with 500-50 x 17, 16 Ply with Hydraulic Brakes		13,457.00
TIRE UPGRADE - OPTIONAL				
75-B114	700960779	Upgrade to 620/40R X 22.5 tires (Tandem Axle only)		4,354.00
LUBRICATION- OPTIONAL				**GROUP 05**
30-B901	700961596	Automatic Chain Lubrication System - Packer		1,237.00
30-B902	700961597	Automatic Chain Lubrication System - Cutter		1,575.00

HESSTON by MASSEY FERGUSON

2250 LARGE RECTANGULAR BALER

Order Code	Catalog Number	Description	Approx. Weight(lb)	List Price
DRIVELINE- FIELD INSTALLED - Required				**GROUP 06**
	MK41290	Type 2, 1-3/8" 21-Tooth PTO	50	726.00
	MK41213	Type 3, 1-3/4" 20-Tooth PTO	50	1,162.00
BALE CONTROL MONITOR-FIELD INSTALLED				**GROUP 98**
Includes harness, power adapter and hardware to mount Console inside the tractor cab. Required for tractors not equipped with ISO 11783 plug and Console.				
	700957986M	C1000 Monitor		2,915.00
FIELD INSTALLED KITS - (order as desired)				**GROUP 99**
	700960673M	Hydraulic Jack Kit		965.00
	700960801M	Bale Weight Kit - (Requires Module Kit -700960668M)		1,632.00
	700960668M	Module Kit.		882.00
	700960978M	Roller Bale Chute (2200 series only)		2,647.00
	MK41242	Flat Bale Chute Kit (Required if AC20 Accumulator is not ordered)	134	655.00
	700961791M	Chain Lube Kit for Packer Baler		1,372.00
	700961792M	Chain Lube Kit for Cutter Baler		1,718.00
	71427873M	Ship Safe Preservative Coating (Factory Applied) (Recommended for shipments occurring in November through March 31ST)		
ORDER FROM PARTS				
	72570307	Telemetry-STD Plus	ORDER FROM PARTS	
	700179375	Telemetry-Installation Kit	ORDER FROM PARTS	
	700741496	French Operators Manual and Decal Kit.	2	No Charge
	700741497	Spanish Operators Manual and Decal Kit	2	No Charge

For Information on AGCO Hay Preservative and Applicators For Balers, See Pages 84 & 85.

Mississippi State Contract Discount: 10%

MASSEY FERGUSON®

AC25 BALE ACCUMULATOR

Primary Color; Grey

FOB Sioux City, IA

STANDARD EQUIPMENT

Attaches to and is towed by 2290, 2270, 2270XD Balers
Capacity - Three Bales
Electronic Bale Shift Control Built into Baler Control Console
Electronic Monitoring built into Baler Control Console
Centralized Lube System - One 12 Point Positive Displacement Grease Divider Valve plus One Direct Lube Line
Width: 156" (4m)
Bale Size - 48" Wide x 51" High x 81" to 108" Long (1.2m Wide x 1.3m High x 2.1m to 2.7m Long)
Axle Type - 2 Dual Wheel Casters with Stabilizing Brake
Four 9.5L x 14 Tires
Bale Unloading Control - Electrical Standard, Operator Controlled
Hydraulics - Solenoid Valve Mounted to Rear of Baler, uses Baler Hydraulic Circuit

Order Code	Catalog Number	Description	Approx. Weight(lb)	List Price
		ONE ITEM FROM EACH GROUP MUST BE SPECIFIED UNLESS NOTED OTHERWISE		
BASE MACHINE				**GROUP 01**
MFAC25	700734307	AC25 Bale Accumulator	3292	20,742.00
MOUNTING KITS - REQUIRED FOR USE				**GROUP 02**
	700739350M	Mounting Kit, Required for 2290, 2270 and 2270XD	215	1,361.00
FIELD INSTALLED KITS - (order as desired)				**GROUP 99**
	MK41298	Bale Weight Scales	161	6,494.00
ORDER FROM PARTS				
	700734321	French Operators Manual and Decal Kit	2	No Charge
	700734322	Spanish Operators Manual and Decal Kit	2	No Charge

* Mounting Kit 700739350M can also be used to mount Hesston 4925 Accumulator to a 2290, 2270 or 2270XD.

Mississippi State Contract Discount: 10%

AC20 BALE ACCUMULATOR

Primary Color; Grey

FOB Sioux City, IA

STANDARD EQUIPMENT

Attaches to and is towed by 2250 Baler
Capacity - Five Bales
Electronic Bale Shift Control Built into
Baler Control Console
Electronic Monitoring built into
Baler Control Console
Centralized Lube System - One 12 Point Positive
Displacement Grease Divider Valve plus
One Direct Lube Line
Width: Wings Down - 176" (4.5m)
Wings Up - 129" (3.3m)

Bale Size - 31.5" Wide x 34.4" High x 60" to 98" Long
(.8m Wide x .9m High x 1.5m to 2.5m Long)
Axle Type - 2 Dual Wheel Casters with Stabilizing Brake
Bale Unloading Control - Electrical Standard,
Operator Controlled
Hydraulics - Solenoid Valve Mounted to Rear of Baler,
uses the same Tractor Hydraulic Circuit

ONE ITEM FROM EACH GROUP MUST BE SPECIFIED UNLESS NOTED OTHERWISE

Order Code	Catalog Number	Description	Approx. Weight(lb)	List Price
BASE MACHINE				**GROUP 01**
MFAC20	700734331	AC20 Bale Accumulator	3455	21,775.00
MOUNTING KITS - Required for Use				**GROUP 02**
	700734454M	Accumulator Mounting Kit, Required for MF2250	199	1,361.00
ORDER FROM PARTS				
	700728991	French Operators Manual and Decal Kit	2	No Charge
	700728992	Spanish Operators Manual and Decal Kit	2	No Charge

* Mounting Kit 700734454M can also be used to mount Hesston 4720 Accumulator to a MF2250.

The following Information will help you with the selection of your AGCO Hay Preservative Application System Selection.

1. Monitor now sold separately on all HayBoss G2 and Upgrade to Automatic HayBoss G2 Kits (Add Preservative to Moisture Only).
   (Touch-Screen Monitor w/ Mounting Bracket - Part No.HT5670A)
2. The HayBoss G2 will now plug into the C1000 Terminal. (New for 2014)
   (This is why the Monitor is now sold separately.)
3. The HayBoss G2 will now plug into select VT (Virtual Terminals). (New for 2014)
   (Virtual Terminals (ISOBUS Monitors) are compatible with the HayBoss G2 - 600 Series.)
4. The Original HayBoss still comes complete with the Touch-Screen Monitor.

AGCO Hay Preservative (U.S.)	Part Number
Drum - 13 U.S. gallons/49.2 liters (120 lb/54.5 kg) (Not Available in California)	HT15DR
Drum - 50 U.S. gallons/189.3 liters (450 lb/204 kg) (Not Available in California)	HT55DR
4 Drums per Pallet - each drum 50 U.S. gallons/189.3 liters; 200 total U.S. gallons/757 liters (1,800 lb/817 kg per pallet)	HT55DR-PQ
Tote - 200 U.S. gallons/757 liters (1,800 lb/817 kg)	HT200MB
Tote - 270 U.S. gallons/1,021.8 liters (2,380 lb/1,079.6 kg)	HT270MB
AGCO Hay Preservative (Canada)	**Part Number**
Drum - 13 U.S. gallons/49.2 liters (120 lb/54.5 kg)	HT15DRC
Drum - 50 U.S. gallons/189.3 liters (450 lb/204 kg)	HT55DRC
4 Drums per Pallet - each drum 50 U.S. gallons/189.3 liters; 200 total U.S. gallons/757 liters (1,800 lb/817 kg per pallet)	HT55DR-PQC
Tote - 270 U.S. gallons/1,021.8 liters (2,380 lb/1,079.6 kg)	HT270MBC

Applicators - Hesston by Massey Ferguson Balers					
Large Square Balers	HayBoss G2 Part No.	HayBoss Part No.	Electronic Part No.	Manual Part No.	Tank size
2250, 2270, 2270XD & 2290 w/o cutter	HT6964518B		HT4914518		110 gal
2250, 2270 & 2290 with drum holder			HT4614518		55 gal
2250, 2270, & 2290 with roto-cutter	HT6964519B		HT4914519		110 gal
2250, 2270 & 2290 with roto-cutter and drum holder			HT4614519		55 gal
2270XD with roto-cutter	HT6964530B		HT4914530		110 gal
2250 with packer-cutter	HT6964527B		HT4914527		110 gal
2250 w/packer-cutter, with drum holder			HT4614527		55 gal
Round Balers					
1734, 1745		HT4464484B	HT4414484	HT4394484	25 gal
2846, 2846A, 2856, 2856A, 2946, 2946A, 2956 & 2956A	HT5494524B	HT4494524B	HT4484524		55 gal
Small Square Balers					
1835, 1837, 1840	HT5504485B	HT4504485B	HT4484485	HT4384485	55 gal
1844N & 1844S (3-tie)	HT5504502B	HT4504502B	HT4484502		55 gal

MASSEY FERGUSON®

HayBoss G2

The following Information will help you with the selection of your AGCO Hay Preservative Application System Selection.

1. Monitor now sold separately on all HayBoss G2 and Upgrade to Automatic HayBoss G2 Kits (Add Preservative to Moisture Only).
   (Touch-Screen Monitor w/ Mounting Bracket - Part No.HT5670A)
2. The HayBoss G2 will now plug into the C1000 Terminal. (New for 2014)
   (This is why the Monitor is now sold separately.)
3. The HayBoss G2 will now plug into select VT (Virtual Terminals). (New for 2014)
   (Virtual Terminals (ISOBUS Monitors) are compatible with the HayBoss G2 - 600 Series.)
4. The Original HayBoss still comes complete with the Touch-Screen Monitor.

Individual Bale Identification (Large Square Balers Only), Upgrade Kits and Accessories HayBoss G2 Individual Identification System - RFID Tags	
Large Square Balers	Part Number
RFID Tags for Individual Bale Identification System (1 Roll - 850 Tags)	HT12-0851A
RFID Tags for Individual Bale Identification System (3 Rolls - 2,550 Tags)	HT12-0853A
RFID Tags for Individual Bale Identification System (6 Rolls - 5,100 Tags)	HT12-0856A
HayBoss G2 Individual Bale Identification System - Scanner and Antenna Options	
Large Square Balers	Part Number
G2 Individual Bale Identification-Tagger Only	HT850
G2 Individual Bale Identification (G2 RFID Tagging System Bundle) Includes HT850 (G2 Tagger), HT860 (Handheld Scanner), & HT12-0851A (RFID Tags, 1 Roll)	HT852
Handheld Scanner for HayBoss G2 Individual Bale Identification System (Also includes Loader Attachment and Antenna for Reading up to 3 Bales)	HT860
Handheld Scanner for HayBoss G2 Individual Bale Identification System (Handheld Only)	HT861
Remote Floor Switch for HT860	HT870
Upgrade Kits and Accessories	
Upgrade Kit to Automatic AGCO HayBoss for Small Square Balers: Challenger, Hesston, New Idea, John Deere, New Holland (non BR) and Universal Applications	HT4624400B
Upgrade Kit to Automatic AGCO HayBoss for Round Balers: Challenger, Hesston, New Idea, John Deere, New Holland (non BR) and Universal Applications	HT4634400B
Touch-Screen Monitor Only for HayBoss G2	H6-5670
Touch-Screen Monitor Only for HayBoss G2 with Mounting Bracket	HT5670A
Moisture Only (For MF2100 and 2200 Series and Challenger LB33B, LB34B, LB34BXD & LB44B and 2200 Series Balers HayBoss G2 In-formation Processor (G2IP), Rate and end-of-bale Sensors and Starwheel Moisture Sensors (Monitor NOT In-cluded since HT600A Plugs into C1000)	HT600A
Moisture Only (For AGCO Brand Balers Prior to the New Generation (2007) and All Other Baler Brands) HayBoss G2 Information Processor (G2IP), rate and end-of-bale sensors and Starwheel moisture sensors (monitor not in-cluded since HT600 plugs into C1000)	HT600
500 Series High Output Flow Meter Kit (Fits all HayBoss G2 Systems)	HT500XHI
Electric Transfer Pump (4-gallons per minute)	HT9212
Electric High-Output Transfer Pump (15-gallons per minute)	HT9214
Digital Electronic Flow Meter	HT453
Upgrade Original HayBoss or 464 to the New HayBoss G2	HT666
Shut-Off Eye Kit 464 - Large Square Baler Applicator Kits manufactured in 2001 & later, All 2005 & later AGCO HayBoss including Small Square and Round balers, All 2004 & later Electronic	HT474A
Pause Switch, Floor Mounted; for use w/ AGCO HayBoss system only.	HT475
G2PIP/GPS Interface Kit for AGCO balers equipped with GTA monitors (HayBoss G2 Only)	HT0880
Scale Interface Kit for AGCO balers equipped with GTA monitors (HayBoss G2 Only)	HT0890A
New Holland Scale Interface Kit for Balers with info-view or Intelliview-3 Monitors (HayBoss G2 Only)	HT0890N
Dye Sprayer Kit for Large Square Balers (HayBoss G2 Only)	HT0840
Dye for Dye Sprayer for Large Square Balers (HayBoss G2 Only) 1- gram Concentrate makes 3 -gallons	HT0800

The Electronic Shut-Off Eye Kit is compatible with all types of applicators (electronic, automatic). It automatically adjusts applicator operation in response to hay movement through the pickup head. For example, when turning at the field's end, the eye turns the spray mechanism off; when the baler is back in the windrow, the eye turns the applicator back on.

Large Square Baler - Bale Weight and Length Kits

One of the features of the HayBoss G2 is that by adding a Bale Weight and Length Kit you can capture the actual weight of the bale on the RFID Tag that is applied with the HayBoss G2 Tagging System. To learn more about the benefits of using the Bale Weight and Length Kit in conjunction with the HayBoss G2 Tagging System, please contact your AGCO Parts Field Parts Manager.

Bale Weight and Length Kits are available for Massey Ferguson, Challenger and AGCO Balers for the model years of 2009 thru 2014.

FORAGE

Mississippi State Contract Discount: 10%

MASSEY FERGUSON®

7515 FORAGE BLOWER

FOB Boisbriand, Quebec Canada

STANDARD EQUIPMENT

Independent Adjustable Transport Wheels
59" (1.5m) Diameter Fan with 8 HD Blade
Water Kit
Overrunning Clutch Kit
Min. recommended HP required: 1HP per foot of silo
2 Sets of Double V-belts on Auger Drive
Shearbolt Protected Drive Line
Safety Chain

Tractor Requirements:
14" Auger: 60 to 160 PTO HP with 540 RPM
14" Auger: 130 to 200 PTO HP with 1000 RPM
16": 140 to 200 PTO HP with 540 RPM
16": 150 to 200 PTO HP with 1000 RPM

ONE ITEM FROM EACH BOX MUST BE SPECIFIED UNLESS NOTED OTHERWISE

Order Code	Catalog Number	Description	Approx. Weight(lb)	List Price
BASE MACHINE				**GROUP 01**
MF7515		7515 Forage Blower		**In Base**
AUGER / PTO SELECTION				**GROUP 02**
S5504	71485176	14" Diameter Auger,1000 rpm Drive, 1 3/8" 21 Spline Yoke		14,123.00
S5506	71485177	14" Diameter Auger, 1000 rpm Drive, 1 3/4” 20 Spline Yoke		14,221.00
S5505	71485178	16" Diameter Auger, 1000 rpm Drive, 1 3/8" 21 Spline Yoke		14,452.00
S5507	71485179	16" Diameter Auger, 1000 rpm Drive, 1 3/4” 20 Spline Yoke		14,550.00
S5502	71485180	14” Diameter Auger, 540 rpm drive		11,414.00
S5503	71485181	16” Diameter Auger, 540 rpm drive		11,760.00

SPREADERS

MASSEY FERGUSON®

Mississippi State Contract Discount: 10%

SPREADERS

FOB Marshfield, Wisconsin

PRODUCT INFORMATION

	SP3710	SP3714	SP3717
Load Rating Capacity			
Bushel	175 Bu	235 Bu	270 Bu
Struck Cu Ft	105	143	167
Overall Width with Standard Tires	83 1/2" (2.1m)	92 1/2" (2.3m)	92 1/2" (2.3m)
Overall Length	17' 8" (5.4m)	18' 6" (5.7m)	20' 5 1/2" (6.3m)
Overall Height with Hydraulic Endgate	49" (1.2m)	55" (1.4m)	55" (1.4m)
Weight with Tires	2030lbs (921 kg)	2890lbs (1311 kg)	3230lbs (1495 kg)
Standard Tire Size	8.25x20	295R22.5 Recap	295R22.5 Recap
Rear Hydraulic Endgate	Optional	Standard	Standard
Hydraulic Cylinder on Hydraulic Endgate	1/Standard	1/Standard-2nd/Optional	1/Standard-2nd/Optional

STANDARD EQUIPMENT

Front Splash Panel
2 Speed Drive
Jack
540 PTO Speed
Drawbar Safety Chains
T-Rod Main Apron Chain
Tire Size- 295R 22.5 Recap (SP3714 and SP3717)
Tire Size- 9.27 x 20 (SP3710)
Beater (Diameter 29" (.7m))
1 Hydraulic Cylinder on Hydraulic Gate (SP3714 and SP3717)

ONE ITEM FROM EACH GROUP MUST BE SPECIFIED UNLESS NOTED OTHERWISE

Order Code	Catalog Number	Description	Approx. Weight(lb)	List Price
BASE MACHINE				**GROUP 01**
MFSP3710	700738786	175 Bu		10,257.00
MFSP3714	700738762	235 Bu with Hydraulic Endgate, Manual Apron Drive		14,615.00
MFSP3717	700738763	270 Bu with Hydraulic Endgate, Manual Apron Drive		16,203.00
TIRE AND WHEEL PACKAGE				**GROUP 02**
MSO16	700738794	16.5 x 16.1 Tires (For SP3717) Set of 2 In Lieu of Standard Tire		526.00
HYDRAULIC VARIABLE SPEED (SP3714 & SP3717)				**GROUP 02**
MSO13C	700738776	Hydraulic Variable Speed Kit for (2) Hose Hookup		1,374.00
MSO13B	700738775	Hydraulic Variable Speed Kit for (4) Hose Hookup		1,112.00
FIELD INSTALLED KITS - (order as desired)				**GROUP 99**
	700738779	Top Beater (For SP3710)		993.00
	700738770	Top Beater (For SP3714 / SP3717)		993.00
	700738790	Hydraulic Endgate including Cylinder (For SP3710)		1,457.00
	700738774	2nd Cylinder for Hydraulic Endgate (For SP3714 / SP3717)		423.00
	700738810	Rear Pan (For SP3710)		759.00
	700738780	Rear Pan (For SP3714 / SP3717)		759.00

Mississippi State Contract Discount: 10%

MASSEY FERGUSON®

SPREADERS

FOB Marshfield, Wisconsin

PRODUCT INFORMATION

	SP3719	SP3724	SP3728
Load Rating Capacity			
Bushel	310 Bu	370 Bu	430 BU
Struck Cu Ft	185	235	275
Overall Width with Standard Tires	97" (2.5m)	97" (2.5m)	107" (2.7m)
Overall Length	21' 11 1/2" (6.1m)	23' 2 1/2" (7.1m)	23' 2 1/2" (7.1m)
Overall Height with Hydraulic Endgate	55" (1.4m)	61" (1.5m)	63 1/2" (1.6m)
Weight with Tires	4190 lbs (1901 kg)	4920 lbs (2232 kg)	5220 lbs (2368 kg)
Standard Tire Size	295R22.5 Recap	295R22.5 Recap	16.5 x 16.1
Rear Hydraulic Endgate	Standard	Standard	Standard
Hydraulic Cylinder on Hydraulic Endgate	1/Standard - 2nd/Optional	2	2
PTO Speed	540 Standard 1000 Optional	540 Standard 1000 Optional	540 Standard 1000 Optional

STANDARD EQUIPMENT

Front Splash Panel
Rear Hydraulic Endgate
Jack
2 Speed Drive
Drawbar Safety Chains
T-Rod Main Apron Chain
Tire Size 295R22.5 Recap (16.5 x 16.1 - SP3728)
Beater (Diameter 29"/ 79 cm)
2 Hydraulic Cylinders on Hydraulic End Gate (SP3724, SP3728)

Order Code	Catalog Number	Description	Approx. Weight(lb)	List Price

ONE ITEM FROM EACH GROUP MUST BE SPECIFIED UNLESS NOTED OTHERWISE

BASE MACHINE				**GROUP 01**
MFSP3719	700738764	310 Bu, Hydraulic Endgate, 185 Cu Ft Struck		19,228.00
MFSP3724	700738766	370 Bu, Hydraulic Endgate (2 Cyl), 235 Cu Ft Struck		21,746.00
MFSP3728	700738767	430 Bu, Hydraulic Endgate (2 Cyl), 275 Cu Ft Struck		24,305.00
TIRE AND WHEEL PACKAGE				**GROUP 02**
MSO16	700738801	16.5 x 16.1 Tires (For SP3719 & SP3724) Set of 4 In Lieu of Standard Tire		526.00
PTO SPEED				**GROUP 03**
	In Base	540 PTO		**In Base**
MSO1000-FI	700738816	1000 PTO (For SP3719 & SP3724)- In Lieu of 540 PTO		No Charge
MSOW1000FI	700738817	1000 PTO (For SP3728) In Lieu of 540 PTO		No Charge
HYDRAULIC VARIABLE SPEED				
MSO13C	700738804	Hydraulic Variable Speed Kit for (2) Hose Hookup		1,374.00
MSO13B	700738803	Hydraulic Variable Speed Kit for (4) Hose Hookup		1,112.00
FIELD INSTALLED KITS - (order as desired)				**GROUP 99**
	700738770	Top Beater (For SP3719)		993.00
	700738778	Top Beater (For SP3724 / SP3728)		993.00
	700738774	2nd Cylinder Hydraulic Endgate (SP3719)		423.00
	700738784	Electric Controls for Hydraulic Drive		422.00
	700738789	Rear Pan (For SP3719 / SP3724)		759.00
	700738812	Rear Pan (For SP3728)		759.00

MASSEY FERGUSON®

Mississippi State Contract Discount: 10%

SPREADERS

FOB Marshfield, Wisconsin

PRODUCT INFORMATION

	SP3735	SP3748
Load Rating Capacity		
Bushel	560 Bu	660 Bu
Struck Cu Ft	353	479
Overall Width with Standard Tires	130 (3.3m)	130 (3.3m)
Overall Length	26' 10" (10.2m)	26' 10" (10.2m)
Overall Height with Hydraulic Endgate (Height on 560 is to the top of the top beater)	78" (2.0m)	83" (2.1m)
Weight with Tires	8140 lbs (3692 kg)	9600 (4354 kg)
Standard Tire Size	425x22.5 Used Tire	425x22.5 Used Tire
Rear Hydraulic Endgate	Standard	Standard
Hydraulic Cylinder on Hydraulic Endgate	2	2

STANDARD EQUIPMENT

Double Floor Apron with T-Bar
Hydraulic Endgate with 2 Hydraulic Cylinders
Hydraulic Variable Speed Main Apron Drive
Top Beater
1000 PTO Speed
Lights
Drawbar Safety Chains
Stress Proof Drive Shafts
Jack
Front Splash Panel
Culvert Grade Galvanized Steel Side Flares

Order Code	Catalog Number	Description	Approx. Weight(lb)	List Price
ONE ITEM FROM EACH GROUP MUST BE SPECIFIED UNLESS NOTED OTHERWISE				
BASE MACHINE				**GROUP 01**
MFSP3735	700738768	560 Bu with Hydraulic Endgate		39,613.00
MFSP3748	700738769	660 Bu with Hydraulic Endgate		45,667.00
PTO SPEED				**GROUP 02**
	In Base	1000 PTO		**In Base**
FIELD INSTALLED KITS - (order as desired)				**GROUP 99**
	700738785	Rear Pan		759.00

Mississippi State Contract Discount: 10%

MASSEY FERGUSON®

SPREADERS

FOB Marshfield, Wisconsin

PRODUCT INFORMATION

Load Rating Capacity	HY3730	HY3744
Bushel	425	550
Standard Tire Size	385 x 22.5	425 x 22.5
Standard PTO	540	1000

Order Code	Catalog Number	Description	Approx. Weight(lb)	List Price
ONE ITEM FROM EACH GROUP MUST BE SPECIFIED UNLESS NOTED OTHERWISE				
BASE MACHINE				**GROUP 01**
MFHY3730~MSHP425	700739750	425 BU Hydra Push with Horizontal Beater		32,076.00
MFHY3730~MSHP425VB	700739751	425 BU Hydra Push with Vertical Beater		41,422.00
MFHY3744~MSHP550	700739752	550 BU Hydra Push with Horizontal Beater		41,191.00
MFHY3744~MSHP550VB	700739753	550 BU Hydra Push with Vertical Beater		51,605.00
PTO OPTION				**GROUP 02**
HPO1000RPM	700739760	1000 RPM PTO . . . . . (For HY3730 only)		No Charge
TIRE AND WHEEL PACKAGE				**GROUP 03**
MSO19L	700738809	19L x 16.1- 10 Ply Tire / Wheel Package . . . . . (For HY3730 only)		1,472.00
REAR PAN				**GROUP 04**
MSHPOPAN	700739787	Rear Pan		814.00

Mississippi State Contract Discount: 10%

MASSEY FERGUSON®

SPREADERS

FOB Marshfield, Wisconsin

PRODUCT INFORMATION

Load Rating Capacity	VB3726	VB3734	VB3744	VB3755
Gallons	2000	2600	3400	4200
Cu. Ft.	269	347	452	556
PTO	540	540	1000	1000

Order Code	Catalog Number	Description	Approx. Weight(lb)	List Price

ONE ITEM FROM EACH GROUP MUST BE SPECIFIED UNLESS NOTED OTHERWISE

BASE MACHINE				GROUP 01
MFVB3726	700739754	VB3726 Spreader*		33,630.00
MFVB3734	700739756	VB3734 Spreader*		36,675.00
MFVB3744	700739757	VB3744 Spreader*		46,904.00
MFVB3755	700739758	VB3755 Spreader*		55,571.00

***Less Wheel / Tire Package**

AXLES				GROUP 02
TSSA	700739772	Straight Axle to increase height (For VB3726)		No Charge
TSOTA	700739781	Heavier Optional Drop Style Axle (For VB3744)		3,977.00

PTO OPTION				GROUP 02
TSO1000RPM	700739761	1000RPM PTO (For VB3726 and VB3744)		971.00

TIRES AND WHEEL PACKAGE				GROUP 03
For VB3726				
TWP165	700739775	16.5x16.1-10 Ply Wheel / Tire Package		2,725.00
TWP295	700739774	295Rx22.5 (Recap) Wheel / Tire (Tubeless) Package		1,424.00
TWP385	700739776	385x22.5 Wheel / Tire Package		1,544.00
For VB3734				
TWP165	700739775	16.5x16.1-10 Ply Wheel / Tire Package		2,725.00
TWP19L	700739777	19Lx16.1-10 Ply Wheel / Tire Package		2,964.00
TWP425	700739778	425x22.5 Wheel / Tire Package		1,544.00
For VB3744				
TWP445	700739779	445x22.5 Wheel / Tire Package		2,042.00
TWP215	700739780	21.51x16.1-18 Ply Wheel / Tire Package		4,941.00
TWP49	700739782	49x19x20 - 30 Ply Wheel / Tire Package **(For use with Heavier Optional Drop Style Axle)**		5,401.00
TWP700	700739783	700/50x22.5 T/W Wheel / Tire Package **(For use with Heavier Optional Drop Style Axle)**		9,037.00
For VB3755				
TWP28L	700739785	28L - 26 16 Ply Wheel / Tire Package		9,954.00

Mississippi State Contract Discount: 10%

MASSEY FERGUSON®

SPREADERS

FOB Marshfield, Wisconsin

Order Code	Catalog Number	Description	VB3726	VB3734	VB3744	VB3755	Approx. Weight(lb)	List Price

ONE ITEM FROM EACH GROUP MUST BE SPECIFIED UNLESS NOTED OTHERWISE

DIGI-STAR 5-POINT SCALE — GROUP 04

TSOS20	700739762	Digi-Star 5-Point Scale with GT400 Monitor (For VB3726)	4,310.00
TSOS26	700739764	Digi-Star 5-Point Scale with GT400 Monitor (For VB3734)	4,310.00
TSOS34	700739765	Digi-Star 5-Point Scale with GT400 Monitor (For VB3744)	5,701.00
TSOSTA34	700739766	Digi-Star 5-Point Scale with GT400 Monitor (For VB3744) . . . . **(For use with Heavier Optional Drop Style Axle)**	9,009.00

HYDRAULIC OPENING LID — GROUP 05

TSOLD34	700739784	Hydraulic opening lid to contain liquid fertilizer (For VB3744) . .	10,328.00
TSOLD42	700739786	Hydraulic opening lid to contain liquid fertilizer (For VB3755) . .	12,580.00

HESSTON by MASSEY FERGUSON

NON CURRENT

Mississippi State Contract Discount: 10%

HESSTON by MASSEY FERGUSON

5200 DRAPER HEADER

for WR9770, WR9760, WR9740, WR9735, WR9725, WR9870, WR9860, WR9840

Primary Color; Grey

FOB Hesston, KS

STANDARD EQUIPMENT

Center Delivery Sizes: 18 ft, 22 ft, 25 ft, 30 ft, 36 ft
Shiftable Sizes: 22 ft, 25 ft, 30 ft
Knife: Hydrostatically Driven via Schumacher Gearbox
1300 Strokes per Minute
Drapers Rubberized with Reinforcing Slats
Drapers: Hydrostatically Driven with In-Cab Speed Control
0 - 600 ft/min
Draper Width: 41" (1.0m) with Adjustable Draper Angle
Swath Opening: 54" (1.4m) to 70" (1.8m) Center Delivery Position
Hydraulic Deck Shift, Inside Cab Controlled,
One Lever Locks Decks Together
(On Double Swath Models)
Header Quick Coupler Kit
Reel Drive: Hydrostatically Driven with In-Cab Speed Control, 0 - 60 RPM
Rubber Coated Drive Roll
Electric Reel Fore/Aft Control
Reel Drive Gearbox (Chain-less drive)
Draper Belt Guide

ONE ITEM FROM EACH GROUP MUST BE SPECIFIED UNLESS NOTED OTHERWISE

Order Code	Catalog Number	Description	Approx. Weight(lb)	List Price
BASE MACHINE				**GROUP 01**
MF5200-H115	700959660YE	5200 Draper Header, Center Delivery (Model Year 2014) .		**In Base**
MF5200-H116	700959661YE	5200 Draper Header, Double Swath (Model Year 2014) .		**In Base**
WORKING WIDTH				**GROUP 02**
Center Delivery Draper Header (H115)				
1-18FOOT	700959652	18' (5.5m) Center Delivery Draper Header	1240	24,674.00
1-22FOOT	700959653	22' (6.7m) Center Delivery Draper Header	1375	26,637.00
1-25FOOT	700959654	25' (7.6m) Center Delivery Draper Header	1540	29,535.00
1-30FOOT	700959655	30' (9.1m) Center Delivery Draper Header	1770	31,787.00
1-36FOOT	700959656	36' (11m) Center Delivery Draper Header	2040	36,652.00
Double Swath Draper Header (H116)				
1-22FOOT	700959657	22' (6.7m) Double Swath Draper Header	1475	28,769.00
1-25FOOT	700959658	25' (7.6m) Double Swath Draper Header	1640	31,673.00
1-30FOOT	700959659	30' (9.1m) Double Swath Draper Header	1870	33,922.00
Sickle and Guards				**GROUP 03**
Standard (H503)				
1~105-18FOOT	700958292	18' (5.5m) Standard Sickle and Guards		No Charge
1~105-22FOOT	700958293	22' (6.7m) Standard Sickle and Guards		No Charge
1~105-25FOOT	700958294	25' (7.6m) Standard Sickle and Guards		No Charge
1~105-30FOOT	700958295	30' (9.1m) Standard Sickle and Guards		No Charge
1~105-36FOOT	700958296	36' (11m) Standard Sickle and Guards		No Charge
Schumacher (H506)				
1~105-18FOOT	700958297	18' (5.5m) Schumacher Sickle and Guards		No Charge
1~105-22FOOT	700958299	22' (6.7m) Schumacher Sickle and Guards		No Charge
1~105-25FOOT	700958300	25' (7.6m) Schumacher Sickle and Guards		No Charge
1~105-30FOOT	700958301	30' (9.1m) Schumacher Sickle and Guards		No Charge
1~105-36FOOT	700958302	36' (11m) Schumacher Sickle and Guards		No Charge

SUBJECT TO AVAILABILITY

Mississippi State Contract Discount: 10%

HESSTON by MASSEY FERGUSON

5200 DRAPER HEADER

Order Code	Catalog Number	Description	Approx. Weight(lb)	List Price
FIELD INSTALLED				**GROUP 99**
	71375019	18' (5.5m) UII Pick Up Reel	340	5,148.00
	71375020	22' (6.7m) UII Pick Up Reel	400	5,076.00
	700960143M	25' (7.6m) UII Pick Up Reel	520	6,502.00
	700960144M	30' (9.1m) UII Pick Up Reel	575	7,331.00
	700960145M	36' (11m) UII Pick Up Reel		7,454.00
	71401116	18' (5.5m) Plastic Wear Plate on Cutter Bar		968.00
	71401117	22' (6.7m) Plastic Wear Plate on Cutter Bar		1,083.00
	71401118	25' (7.6m) Plastic Wear Plate on Cutter Bar		1,274.00
	71401120	30' (9.1m) Plastic Wear Plate on Cutter Bar		1,310.00
	MK61187	36' (11m) Plastic Wear Plate on Cutter Bar		1,448.00
	71396012	Parking Stand (Required to Disconnect Header if Gauge Wheels are not Ordered)	32	217.00
	71394219	Skid Shoes Kit		441.00
	MK61216	Lowered Sickle (30' and below, S/N HN10101 and Later)		1,293.00
	71393027	Fixed Gauge Wheel Kit (Outboard mounting with minimal ground contact)	100	1,055.00
	700959222M	Swivel Gauge Wheels (18' to 25') (Outboard mounting and will allow the gauge wheels to be in direct ground contact, while turning and can be used on rolling terrain.)		1,583.00
	700959665M	Swivel Gauge Wheels (30' and 36' only) (Inboard mounting and recommended for use on level ground to reduce running over uncut material)		1,499.00
	71428520M	Ship Safe Preservative Coating (Factory Applied) (Recommended for shipments occurring in November through March 31ST)		586.00.
ORDER FROM PARTS				
	700960564	Mounting kit for plastic wear plates w/ SCH sickle & guards		ORDER FROM PARTS
	700738276	French Operators Manual and Decal Kit	2	No Charge
	700738277	Spanish Operators Manual and Decal Kit	2	No Charge

SUBJECT TO AVAILABILITY

MASSEY FERGUSON®

KITS FOR NON-CURRENT MODELS

These kits will be available through wholegoods until December 2014.
After that they will be sourced through AGCO parts.

(MODEL YEAR 2013 AND PRIOR)

Catalog Number	Description	Approx. Weight(lb)	List Price
LARGE SQUARE BALERS			
700957661M	Roller Bale Chute for 2150		2,234.00
700957663M	Roller Bale Chute for 2170 / 2170XD / 2190		2,495.00
700960662M*	Bale Weight Kit for 2190		1,618.00
700960663M*	Bale Weight Kit for 2170 / 2170XD		1,595.00
700960665M*	Bale Weight Kit for 2150		1,643.00
MK41282	Bale Ejector Kit for 2190		3,070.00

*Must be ordered with Controller Module (Current Inventory) 700960668M for 2190 / 2170 / 2170XD / 2150

ROUND BALERS			
MK51001	Hydraulic Tractor Remote Valve (To add extra Remote Valve) for 2846 / 2846A / 2856 / 2856A		950.00
MKD51181	Power Harness Kit for 1745		69.00
MOWERS			
700958143M	High Skid Kit for 9183 / 9186		334.00
MK61016	Gauge Wheel for 14' for 9126 / 9146		1,587.00
MK60562	Gauge Wheel Kit for 16' and 18' for 9146 / 9126		1,172.00
MK60575	Heavy Crop Spider Reel for 14' and 16' for 9126		238.00
MK60938	Heavy Crop Spider Reel for 18' for 9126		319.00
THREE STRING BALERS			
MK40842	Clevis Kit		252.00

Referral Attachments

As the large square baler and round baler markets expand in North America, your customers continue to explore more efficient methods to handle their bales. The equipment manufacturer below offers cost effective, reliable, and durable equipment to complement AGCO's haytool business.

AGCO does not represent these products or company or offer terms or warranty. When installed and operated according to the manufacture's instructions, these attachments will not void AGCO warranty of the AGCO new products. The availability, performance, service parts availability, pricing after sale service and warranty of these products is the sole responsibility of the manufacturer and not of AGCO. Some products will not be available in all markets of the United States or of Canada.

Pull-Type Big Bale Wagons
Large Square Bale Stackers
Round Bale Hay Hikers

ProAG / Morris Industries
PO Box 1117
Minot, ND 58702
Toll Free: 866-663-8515
Lisa Gaskin, Sales Rep direct line: 406-570-4480
E-Mail Address **lgaskin@proagdesigns.com**

MASSEY FERGUSON®

RESERVED

TILLAGE

Chapter - Page

1000 Series Discs

1000 Assembly Charges . . . 1000-1
1212 - Single Section Tandem Disc . . . 1000-2
1234 - Three Section Flexible Tandem Disc . . . 1000-5
1321 - Flexible Offset Disc . . . 1000-11
1435 - Three Section and Split-Wing Flexible Tandem Disc (Subject to Availability) . . . 1000-16
1436 - Three Section and Split-Wing Flexible Tandem Disc . . . 1000-26
1444 - Four Section Flexible Tandem Disc . . . 1000-34
1544 - Four Section Flexible Tandem Disc . . . 1000-34
1550 - Five Section Flexible Disc . . . 1000-39
1710 - Single Section H.D. Offset Disc . . . 1000-41
1730 - Three Section Flexible H.D. Offset Disc . . . 1000-41
1710HD - Single Section (Super H.D.) Offset Disc . . . 1000-46
1810 - Single Section H.D. Tandem Disc . . . 1000-47
1830 - Three Section Flexible H.D. Tandem Disc . . . 1000-47

2000 Series Chisels

2000 Assembly Charges . . . 2000-1
2510 - Single Section Chisel Plows . . . 2000-2
2530 - Three Section Flexible Chisel Plows . . . 2000-2

3000 Series Fallow Tillage

3000 Assembly Charges . . . 3000-1
3000 - Fallow King . . . 3000-2
3300 - Sunflower/ Flex-King Blade Plow . . . 3000-5
3600 - Sunflower / Richardson Blade Plow . . . 3000-9

4000 Series Tillage Tools

4000 Assembly Charges . . . 4000-1
4213 - Single Section Coulter Chisel . . . 4000-2
4233 - Three Section Flexible Coulter Chisel . . . 4000-7
4412 - Disc Ripper . . . 4000-12
4511 - Disc Chisel . . . 4000-15
4530 - Three Section Flexible Disc Chisel . . . 4000-15
4610 - Single Section Disc Ripper . . . 4000-19
4630 - Three Section Disc Ripper . . . 4000-19
4710/30 - In Line Rippers . . . 4000-22

5000 Series Field Cultivators

5000 Assembly Charges . . . 5000-1
5035 - Three Section Field Cultivator . . . 5000-2
5135 - Three Section Field Cultivator . . . 5000-2
5056 - Five Section Field Cultivator . . . 5000-10

6000 Series Land Finishers

6000 Assembly Charges . . . 6000-1
6000 - Land Finisher . . . 6000-2
6630 - Vertical Tillage Tool (Subject to Availability) . . . 6000-12
6631 - Three Section and Split-Wing Vertical Tillage Tools . . . 6000-15
6650 - Five Section Vertical Tillage Tool . . . 6000-20

7000 Series Soil Conditioning and Strip-Till Tools

7000 Assembly Charges and Freight Charges . . . 7000-1
7200 - Soil Conditioner . . . 7000-3
7610/30 - Strip-Till Tillage Tools . . . 7000-7

Chapter - Page

8000 Series Dump Wagon

8000 Assembly Charges 8000-1
8010/8020 - Richardton Dump Wagon 8000-2
8210 - Richardton Dump Wagon 8000-5

9000 Drills

9312 - Pull Type End Wheel Grain Drill 9000-1
9412 - 3-Point Grain Drill 9000-4
9413 - 3-Point Grain Drill 9000-7
9510 - Fertilizer Grain Drill 9000-10
9421 - Two Section Folding Grain Drill 9000-13
9435 - Three Section Folding Grain Drill 9000-16
9531 - Three Section Folding Fertilizer Grain Drill 9000-19
9610 - Min-Till 3 Point Grain Drill 9000-22
9730/50 - Flexible Air-Till (Shank) Drills 9000-25
9830/50 - Flexible Air Drills (Single Disc Openers) 9000-30
9920/30 - Air Carts 9000-38

F.O.B. Point

Product	F.O.B. Point of Manufacture
1212 - Single Section Tandem Disc	Beloit, KS
1234 - Three Section Tandem Disc	Beloit, KS
1321 - Flexible Offset Disc	Beloit, KS
1436 - Three Section and Split-Wing Flexible Tandem Disc	Beloit, KS
1444 / 1544 - Four Section Flexible Tandem Disc	Beloit, KS
1550 - Five Section Flexible Disc	Beloit, KS
1710 / 1730 - One Section Non-Folding Offset Disc	Wishek, ND
1710HD - One Section Heavy Duty Non-Folding Offset Disc	Wishek, ND
1810 - One Section Non-Folding Tandem Disc	Wishek, ND
1830 - One Section Non-Folding Tandem Disc	Wishek, ND and Wahpeton, ND
2433 - Three Section Flexible Chisel Plow	Beloit, KS
3000 - Fallow King	Beloit, KS
3300 - Sunflower Blade Plow	Beloit, KS
3600 - Sunflower / Richardson Blade Plow	Beloit, KS
4213 - Rigid Coulter Chisel	Beloit, KS
4233 - Three Section Flexible Coulter Chisel	Beloit, KS
4412 - Disc Ripper	Beloit, KS
4511 / 4530 - Disc Chisel	Beloit, KS
4610 - One Section Disc Ripper	Wahpeton, ND
4630 - Three Section Disc Ripper	Wahpeton, ND
4700 - In Line Ripper	Wahpeton, ND
5035 / 5135 - Three Section Field Cultivator	Beloit, KS
5056 - Five Section Field Cultivator	Beloit, KS
6000 - Land Finisher	Beloit, KS
6630 / 6631 / 6650 - Vertical Tillage Tool	Beloit, KS
7200 - Soil Conditioner	Beloit, KS
7600 - Strip-Till Tool	Beloit, KS
8010/8020 - Richardton Dump Wagon	New Hampton, IA
8210 - Richardton Dump Wagon	New Hampton, IA
9007/9010 Sunflower Grain Drill	Beloit, KS
9312 - Pull Type End Wheel Grain Drill	Beloit, KS
9412 - 3-Point Grain Drill	Beloit, KS
9413 - 3-Point Grain Drill	Beloit, KS
9510 - Fertilizer Grain Drill	Beloit, KS
9421 - Two Section Folding Grain Drill	Beloit, KS
9435 - Three Section Folding Grain Drill	Beloit, KS
9531 - Three Section Folding Fertilizer Grain Drill	Beloit, KS
9610 - Min-Till 3 Point Grain Drill	Beloit, KS
9700 - Air-Till Drill	Wahpeton, ND
9800 - Single Disc Air Drill	Wahpeton, ND
9900 - Air Cart	Fargo, ND

FACTORY OR DEALERSHIP ASSEMBLY AMOUNTS ON 1000 SERIES
(DISCOUNTS DO NOT APPLY)

The factory or dealership set-up amounts will be charged for machines set-up by Sunflower. Set-up amounts are the same whether machines are shipped via our truck (gangs off wings, etc.) or set-up completely and picked up by dealer's truck. Factory assembly charge includes hydraulic hose, hydraulic oil, and tips (hydraulic system is charged). Dealer location assembly charge includes hydraulic hose, and tips. (Hydraulic oil is not included) See note below.

MODEL NUMBER	FACTORY ORDER CODE	FACTORY SET-UP RATE	DEALER LOCATION ORDER CODE	DEALER LOCATION SET-UP RATE
SF1212-10	SET0001S	**738.00**	SET0001DS	**773.00**
SF1212-12	SET0002S	**796.00**	SET0002DS	**834.00**
SF1212-13	SET0003S	**873.00**	SET0003DS	**914.00**
SF1212-15	SET0004S	**928.00**	SET0004DS	**972.00**
SF1234-18	SET0005S	**1,232.00**	SET0005DS	**1290.00**
SF1234-21 (NC)	SET0006S	**1,327.00**	SET0006DS	**1390.00**
SF1234-21 (WC)	SET0007S	**1,327.00**	SET0007DS	**1390.00**
SF1234-24 (NC)	SET0008S	**1,470.00**	SET0008DS	**1540.00**
SF1234-24 (WC)	SET0009S	**1,470.00**	SET0009DS	**1540.00**
SF1234-27	SET0010S	**1,660.00**	SET0010DS	**1739.00**
SF1234-29 ♦	SET0011S	**1,800.00**	SET0011DS	**1885.00**
SF1234-32 ♦	SET0012S	**1,961.00**	SET0012DS	**2055.00**
SF1321-14	SET0014S	**873.00**	SET0014DS	**914.00**
SF1321-16	SET0015S	**909.00**	SET0015DS	**953.00**
SF1321-18	SET0016S	**1,318.00**	SET0016DS	**1381.00**
SF1436-21	SET0018S	**1,137.00**	SET0018DS	**1191.00**
SF1436-24	SET0019S	**1,232.00**	SET0019DS	**1290.00**
SF1436-27	SET0020S	**1,327.00**	SET0020DS	**1390.00**
SF1436-29	SET0021S	**1,365.00**	SET0021DS	**1430.00**
SF1436-31♦	SET0022S	**1,527.00**	SET0022DS	**1599.00**
SF1436-33♦	SET0023S	**1,649.00**	SET0023DS	**1727.00**
SF1436-36♦	SET0024S	**1,800.00**	SET0024DS	**1885.00**
Hydraulic (Lift, Self Leveler or Fold Kit) Add For SF1212, SF1321, SF1436	SET0031S	**47.00**	SET0031DS	**50.00**
SF1444-30	SET0025S	**1,933.00**	SET0025DS	**2025.00**
SF1444-33 ♦	SET0026S	**2,038.00**	SET0026DS	**2135.00**
SF1444-36 / SF1436-33 ♦	SET0027S	**2,141.00**	SET0027DS	**2243.00**
SF1444-40 / SF1436-38 ♦	SET0028S	**2,245.00**	SET0028DS	**2352.00**
SF1544-42	SET0029S	**2,266.00**	SET0029DS	**2374.00**
SF1544-45	SET0030S	**2,435.00**	SET0030DS	**2551.00**
SF1550-47 / SF1550-50♦	SET0218S	**4,249.00**	SET0218DS	**4452.00**
Hydraulic Self Leveler, add SF1435 / SF1444 & SF1544	SET0032S	**93.00**	SET0032DS	**98.00**
Coil Tine Harrow	SET0033S	**22.00 per foot**	SET0033DS	**23.00 per foot**
Finishing Reels	SET0227S	**11.00 per foot**	SET0227DS	**12.00 per foot**
Three Row Spike Drag SF1436 & SF1544	SET0034S	**16.00 per foot**	SET0034DS	**17.00 per foot**

SUNFLOWER RECOMMENDS THESE SET-UP FIGURES BE USED BY DEALERS WHEN TRANSFERRING EQUIPMENT

♦Frames indicated are over-width and require special permits.

Dealership Assembly requirements:

1. The dealership assembly service must be ordered separately from the implement. (initiates scheduling of service) Please order dealership assembly service from the field installed options tab in e-ordering.
2. Include in the dealership assembly order request the order and/or invoice number of the implement to be assembled.
3. Dealer supplies hydraulic oil (oil is not included).
4. Dealer supplies a fork lift of sufficient size to be used by AGCO's assembly crew.

1212 SERIES SINGLE SECTION TANDEM DISCS
F.O.B. Beloit, KS

STANDARD CONFIGURATION

2 New 8 Ply, 11L x 15 Tubeless Tires, 10’ and 12’ Discs (3058YS)
2 15" x 10" Six Bolt Wheels and Hubs with Zerk, 2" Slip-in Spindles and Triple Lip Seals, 10’ and 12’ Discs
4 New 8 Ply, 11L x 15 Tubeless Tires, 13’ and 15’ Discs (3058YS)
Maintenance Free Lift System
4 15" x 10" Six Bolt Wheels and Hubs with Zerk, 2" Slip-in Spindles and Triple Lip Seals, 13’ and 15’ Discs
4 High Strength 1-3/4" Round Stress Proof Gang Shafts on All Sizes
Hydraulic Hose Holder
1 Double Lip Hitch with 1-1/4" Hole (7500017S)
1 Lift Cylinder (4 x 10), with Depth Stop and 1/2” Hydraulic Hose (2500178R)
1 Tongue Jack
Triple Sealed Greaseable Trunnion Style Gang Bearings
1-3/4" Alloy Steel Gang Shaft
C-Flex Bearing Standards (1-1/4" x 2-1/2")
4" wide Rigid Scraper Assemblies Mounted to C-Flex
Warning Light Kit, Complete with Wiring to Tractor
SMV Emblem

DISC MODEL	SF1212-10’	SF1212-12’	SF1212-13’	SF1212-15’
CUTTING WIDTH	10’ 6"	11’ 10"	13’ 3"	14’ 7"
GANG STANDARDS	6 / 4	6 / 4	6 / 6	6 / 6
QTY of BLADES 8½"	14 / 14	16 / 16	18 / 18	20 / 20

These prices reflect the standard configuration. If items other than those listed in the standard configuration are ordered, then the quoted price below will change.

For Quotation Purposes Only – Please Order Items from the Groups on the Next Pages

MODEL NUMBER	CUTTING WIDTH	BLADE DIAMETER	EST. WEIGHT	¼” THICK (4 GA) BLADES	6 GAUGE BLADES
SF1212-10	10’ 6"	22.00"	4648	17,798.00	17,109.00
SF1212-10	10’ 6"	24.00"	4802	18,226.00	17,986.00
SF1212-12	11’ 10"	22.00"	4894	18,516.00	17,744.00
SF1212-12	11’ 10"	24.00"	5074	19,006.00	18,654.00
SF1212-13	13’ 3"	22.00"	5670	21,059.00	20,256.00
SF1212-13	13’ 3"	24.00"	5871	21,622.00	21,280.00
SF1212-15	14’ 7"	22.00"	5835	22,015.00	20,980.00
SF1212-15	14’ 7"	24.00"	6144	22,566.00	22,099.00

* Estimated weight when equipped with 4 GA blades

1212 SERIES SINGLE SECTION TANDEM DISCS

ORDER CODE	DESCRIPTION	APPROX. WEIGHT (LBS)	LIST PRICE

Select One Order Code from Each Group, 01 through 06.

Group 01 Base Machine

SF1212-10	12121000, 10' Single Section Tandem Disc	1700	8,351.00
SF1212-12	12121200, 12' Single Section Tandem Disc	1700	8,687.00
SF1212-13	12121300, 13' Single Section Tandem Disc	1855	9,246.00
SF1212-15	12121500, 15' Single Section Tandem Disc	1855	9,533.00

Group 02 Gangs Smooth Blades, 8½" Blade Spacing

SF1212-10

12301598S	22" 6 Gauge, C-Flex	2257	6,001.00
12301597S	22" 4 Gauge, C-Flex	2420	6,690.00
12301600S	24" 6 Gauge, C-Flex	2397	6,878.00
12301599S	24" 4 Gauge, C-Flex	2574	7,118.00

SF1212-12

12301602S	22" 6 Gauge, C-Flex	2479	6,300.00
12301601S	22" 4 Gauge, C-Flex	2666	7,072.00
12301604S	24" 6 Gauge, C-Flex	2628	7,210.00
12301603S	24" 4 Gauge, C-Flex	2846	7,562.00

SF1212-13

12301606S	22" 6 Gauge, C-Flex	2858	7,402.00
12301605S	22" 4 Gauge, C-Flex	3071	8,205.00
12301608S	24" 6 Gauge, C-Flex	3023	8,426.00
12301607S	24" 4 Gauge, C-Flex	3272	8,768.00

SF1212-15

12301610S	22" 6 Gauge, C-Flex	3206	7,839.00
12301609S	22" 4 Gauge, C-Flex	3236	8,874.00
12301612S	24" 6 Gauge, C-Flex	3297	8,958.00
12301611S	24" 4 Gauge, C-Flex	3545	9,425.00

Group 03 Tires

3058YS	New 8 Ply, 11L Tubeless Tire / 6 Bolt Wheel (15" x 10")	65	319.00
3587YS	New 12 Ply, 11L Tubeless Tire / 6 Bolt Wheel (15" x 10")	74	350.00

MODELS	ORDER QUANTITY
SF1212-10 and SF1212-12	2
SF1212-13 and SF1212-15	4

1212 SERIES SINGLE SECTION TANDEM DISCS

ORDER CODE	DESCRIPTION	APPROX. WEIGHT (LBS)	LIST PRICE

Select One Order Code from Each Group, 01 through 06.

Group 04 Hitches

7500017S	Double Lip Hitch with 1-1/4" Pin Hole	20	160.00
7500018S	Single Lip Hitch with 1-1/4" Pin Hole	20	160.00

Group 05 Lift Cylinder

2500178RS	4" x 10" Lift Cylinder with Depth Stop and 1/2" Hydraulic Hose	51	430.00

Group 06 Lift Assembly

7500480RS	For 10' and 12', Standard Lift Assembly	327	1,529.00
7500481RS	For 13' and 15', Standard Lift Assembly	413	1,742.00

Optional Equipment - For Current Machines Only

Dual Wheel Kit for 10' and 12' Discs

7500001YS	Dual Wheel Kit with Two New 8 Ply, 11L x 15 Tubeless Tires	250	744.00
7500032YS	Dual Wheel Kit with Two New 12 Ply, 11L x 15 Tubeless Tires	270	891.00
5842RS	Rear Tow Hitch with Ball Joint	169	842.00
5843RS	Rear Tow Hitch with Hitch Slide and Ball Joint	189	1,045.00
18663BS	Gang Wrench, 2-3/4"	20	89.00
12634PLS	Wiring Harness to Plug Soil Conditioner Lights into Implement Lights		223.00

Three Row Coil Tine Finishing Harrows For 1212 Series Discs

Spring Loaded Drag Arms with all Required Hardware and Mounting Brackets

Three Rows of 3/8" x 16" Coil Tines on 7-1/2" Centers, 2-1/2" Spacing Overall, with Angle Adjustment and Backup Protection

15" Spacing Between Rows

MODEL	SECTION
SF1212-10	52½" 67½"
SF1212-12	67½" 67½"
SF1212-13	67½" 82½"
SF1212-15	67½" 97½"

17001720RS	SF1212-10	544	2,969.00
17001721RS	SF1212-12	564	3,292.00
17001722RS	SF1212-13	589	3,426.00
17001723RS	SF1212-15	608	3,494.00

SUNFLOWER

Mississippi State Contract Discount: 5%

1234 SERIES THREE SECTION FLEXIBLE TANDEM DISCS

F.O.B. Beloit, KS

STANDARD CONFIGURATION

6 New 8 Ply, 11L x 15 Tubeless Tires on 18',and 21' Discs
6 15" x 10" Six Bolt Wheels and Hubs with Zerk, 2" Spindles and Triple Lip Seals on 18' and 21' Discs
8 New 8 Ply, 11L x 15 Tubeless Tires on 24' and 27' Discs
8 New 12 Ply, 11L x 15 Tubeless Tires on 29' and 32' Discs
8 15" x 10" Six Bolt Wheels and Hubs with Zerk, 2" Spindles and Triple Lip Seals on 24', 27', 29' and 32'
1 Rephasing Lift System with Single Point Depth Control
1 Self-leveling Hitch Assembly with Manual Screw Type Adjustment (7890RS)
1 Cast Single Lip Hitch for 1-7/8" Pin, Category III on 18' through 24' Discs (7921RS)
1 Cast Single Lip Hitch for 2" Pin, Category IV on 27' through 32' Discs (6933RS)
2 Heavy-duty Gauge Wheels with 8.00 x 10 New Tires and Tubes, Five Bolt Hub and Triple Lip Seal on All Sizes
High Strength 1-3/4" Round Stress Proof Gang Shafts
Triple Sealed Greaseable Trunnion Gang Bearings with Shields
Maintenance Free Lift System
Automatic Transport Lock with Relief Valve
C-Flex Bearing Standard (1-1/4" x 2-1/2")
4" wide Rigid Scraper Assemblies Mounted to C-Flex
Safety Equipment Including: Light Kit, SMV Emblem, and Safety Chain

1234 SERIES
THREE SECTION FLEXIBLE TANDEM DISC

DISC MODEL	SF1234-18'	SF1234-21' (NC)	SF1234-21' (WC)	SF1234-24' (NC)	SF1234-24' (WC)	SF1234-27'	SF1234-29'	SF1234-32'
TRANS. WIDTH	12' 8"	12' 5"	15' 4"	12' 5"	15' 4"	15' 4"	15' 4"	15' 4"
TRANS. HEIGHT	10' 2"	11' 5"	10' 2"	12' 10"	11' 5"	12' 7"	13' 11"	15' 4"
FRAME SIZE	5½ - 7 - 5½	7 - 7 - 7	5½ - 10 - 5½	8½ - 7 - 8½	7 - 10 - 7	8½ - 10 - 8½	9½ - 10 - 9½	11 - 10 - 11
STD GANGS Front / Rear	8/10	10/10	10/10	10/10	12/10	12/10	12/12	14/14
QTY of BLADES 7 ½" x 8 ½" Front / Rear	N/A	N/A	34/32	N/A	38/36	42/40	46/44	52/48
QTY of BLADES 8 ½" x 8 ½" Front / Rear	26/28	30/32	N/A	34/36	34/36	38/40	42/44	46/48

Note: Wing Frames On 1234-29' and -32' Discs Are Over-Width (10' 4" and 11' 4") And Require Special Permits.

1234 SERIES THREE SECTION FLEXIBLE TANDEM DISCS

These prices reflect the standard configuration. If items other than those listed in the standard configuration are ordered, then the quoted price below will change.

For Quotation Purposes Only – Please Order Items from the Groups on the Next Pages

MODEL NUMBER	CUTTING WIDTH	BLADE DIAMETER	EST. WEIGHT	¼" THICK (4 GA) BLADES	6 GAUGE BLADES
SMOOTH BLADES - 8½" BLADE SPACING					
SF1234-18	18' 11"	22"	9829	41,360.00	40,061.00
SF1234-18	18' 11"	24"	10034	42,208.00	40,725.00
SF1234-21(NC)	21' 8"	22"	10690	45,134.00	43,688.00
SF1234-21(NC)	21' 8"	24"	10940	46,121.00	44,439.00
SF1234-24(NC)	24' 5"	22"	12184	49,524.00	47,923.00
SF1234-24(NC)	24' 5"	24"	12467	50,673.00	48,786.00
SF1234-24(WC)	24' 5"	22"	12422	50,411.00	48,810.00
SF1234-24(WC)	24' 5"	24"	12705	51,556.00	49,673.00
SF1234-27	27' 2"	22"	13427	52,199.00	50,371.00
SF1234-27	27' 2"	24"	13742	53,419.00	51,331.00
SF1234-29	29' 11"	22"	15370	57,321.00	55,318.00
SF1234-29	29' 11"	24"	15714	58,672.00	56,342.00
SF1234-32	32' 8"	22"	16816	60,891.00	58,713.00
SF1234-32	32' 8"	24"	17192	62,412.00	59,867.00
SMOOTH BLADES - 7½" FRONT and 8½" REAR BLADE SPACING					
SF1234-21(WC)	21' 8"	22"	10904	46,249.00	44,742.00
SF1234-24(WC)	24' 5"	22"	12578	49,992.00	48,313.00
SF1234-27	27' 2"	22"	13583	52,660.00	50,801.00
SF1234-29	29' 11"	22"	15628	58,090.00	55,977.00
SF1234-32	32' 8"	22"	17098	61,615.00	59,348.00

1234 SERIES THREE SECTION FLEXIBLE TANDEM DISCS

ORDER CODE	DESCRIPTION	APPROX. WEIGHT (LBS)	LIST PRICE
	Select One Order Code from Each Group, 01 through 08.		
Group 01	**Base Machine**		
SF1234-18	12341800, 18' Three Section Flexible Tandem Disc	5232	21,580.00
SF1234-21NC	12342101, 21' 3 Sect Flex Tandem (Narrow Center)	5299	22,956.00
SF1234-21WC	12342100, 21' 3 Sect Flex Tandem (Wide Center)	5221	23,300.00
SF1234-24NC	12342401, 24' 3 Sect Flex Tandem (Narrow Center)	6167	25,256.00
SF1234-24WC	12342400, 24' 3 Sect Flex Tandem (Wide Center)	6089	25,460.00
SF1234-27	12342700, 27' Three Section Flexible Tandem Disc	6689	25,911.00
SF1234-29	12342900, 29' Three Section Flexible Tandem Disc	8027	29,667.00
SF1234-32	12343200, 32' Three Section Flexible Tandem Disc	8857	30,612.00
Group 02	**Gangs Smooth Blades, 8½" Blade Spacing**		
SF1234-18			
12301459S	22" 6 Gauge, C-Flex	4078	12,575.00
12301306S	22" 4 Gauge, C-Flex	4078	13,874.00
12301460S	24" 6 Gauge, C-Flex	4283	13,239.00
12301310S	24" 4 Gauge, C-Flex	4283	14,722.00
SF1234-21NC			
12301462S	22" 6 Gauge, C-Flex	4872	14,826.00
12301312S	22" 4 Gauge, C-Flex	4872	16,272.00
12301463S	24" 6 Gauge, C-Flex	5122	15,577.00
12301316S	24" 4 Gauge, C-Flex	5122	17,259.00
SF1234-24NC			
12301469S	22" 6 Gauge, C-Flex	5368	15,892.00
12301318S	22" 4 Gauge, C-Flex	5368	17,493.00
12301470S	24" 6 Gauge, C-Flex	5651	16,755.00
12301322S	24" 4 Gauge, C-Flex	5651	18,642.00
SF1234-24WC			
12301473S	22" 6 Gauge, C-Flex	5466	16,362.00
12301334S	22" 4 Gauge, C-Flex	5466	17,963.00
12301474S	24" 6 Gauge, C-Flex	5749	17,225.00
12301338S	24" 4 Gauge, C-Flex	5749	19,108.00
SF1234-27			
12301477S	22" 6 Gauge, C-Flex	5949	17,428.00
12301342S	22" 4 Gauge, C-Flex	5949	19,256.00
12301478S	24" 6 Gauge, C-Flex	6264	18,388.00
12301346S	24" 4 Gauge, C-Flex	6264	20,476.00
SF1234-29			
12301508S	22" 6 Gauge, C-Flex	6622	18,290.00
12301510S	22" 4 Gauge, C-Flex	6622	20,293.00
12301511S	24" 6 Gauge, C-Flex	6966	19,314.00
12301512S	24" 4 Gauge, C-Flex	6966	21,644.00
SF1234-32			
12301485S	22" 6 Gauge, C-Flex	7238	20,740.00
12301358S	22" 4 Gauge, C-Flex	7238	22,918.00
12301486S	24" 6 Gauge, C-Flex	7614	21,894.00
12301362S	24" 4 Gauge, C-Flex	7614	24,439.00

1234 SERIES THREE SECTION FLEXIBLE TANDEM DISCS

ORDER CODE	DESCRIPTION	APPROX. WEIGHT (LBS)	LIST PRICE

Select One Order Code from Each Group, 01 through 08.

Group 02 Gangs - Continued Smooth Blades - 7½" FRONT and 8½" REAR BLADE SPACING

SF1234-21WC

12301465S	22" 6 Gauge, C-Flex	5164	15,198.00
12301330S	22" 4 Gauge, C-Flex	5164	16,705.00

SF1234-24WC

12301472S	22" 6 Gauge, C-Flex	5622	15,865.00
12301332S	22" 4 Gauge, C-Flex	5622	17,544.00

SF1234-27

12301596S	22" 6 Gauge, C-Flex	6105	17,858.00
12301595S	22" 4 Gauge, C-Flex	6105	19,717.00

SF1234-29

12301507S	22" 6 Gauge, C-Flex	6880	18,949.00
12301509S	22" 4 Gauge, C-Flex	6880	21,062.00

SF1234-32

12301513S	22" 6 Gauge, C-Flex	7520	21,375.00
12301514S	22" 4 Gauge, C-Flex	7520	23,642.00

Group 03 Tires – See Chart Below

Note – Tires On Wings & Center Frames Must Be The Same Ply Rating

3058YS	New 8 Ply, 11L Tubeless Tire, 6 Bolt Wheel (15" x 10")	65	319.00
3587YS	New 12 Ply, 11L Tubeless Tire, 6 Bolt Wheel (15" x 10") . . .	74	350.00

Group 04 Dual Wing Wheel Kit for 24' WC & 27' Discs – See Chart Below

7500001YS	Dual Wheel Kit with Two New 8 Ply, 11L x 15 Tubeless Tires .	270	744.00
7500032YS	Dual Wheel Kit with Two New 12 Ply, 11L x 15 Tubeless Tires	288	891.00

MODEL	(Qty) CENTERS	(Qty) WINGS
SF1234-18	(4) 3058YS or 3587YS	(2) 3058YS or 3587YS
SF1234-21NC	(4) 3058YS or 3587YS	(2) 3058YS or 3587YS
SF1234-21WC	(4) 3058YS or 3587YS	(2) 3058YS or 3587YS
SF1234-24NC	(4) 3058YS or 3587YS	(4) 3058YS or 3587YS
SF1234-24WC and SF1234-27	(4) 3058YS or 3587YS	(2) 3058YS or 3587YS and (1) 7500001YS or 7500032YS
SF1234-29 and SF1234-32	(4) 3587YS	(4) 3587YS

Mississippi State Contract Discount: 5%

1234 SERIES THREE SECTION FLEXIBLE TANDEM DISCS

ORDER CODE	DESCRIPTION	APPROX. WEIGHT (LBS)	LIST PRICE

Select One Order Code from Each Group, 01 through 08.

Group 05 Center Lifts

7500473RS	Lift Assy, Center, 2" Spindles - 18, 21NC, 24NC		1,940.00
7500471RS	Lift Assy, Center, 2" Spindles - 21WC, 24WC, 27, 29, 32		2,278.00

Group 06 Wing Lifts

7500474RS	Lift Assy, Wings, 2" Spindles - 18, 21NC, 21WC, 24WC		1,411.00
7500475RS	Lift Assy, Wings, 2" Spindles - 27		1,455.00
7500472RS	Lift Assy, Wings, 2" Spindles - 24NC, 29, 32		1,642.00

Group 07 Levelers

7890RS	Self-Leveling Hitch with Manual Screw Adjustment	100	481.00
2500116RS	Hydraulic Self-Leveling System with Level Indicator	155	1,513.00

Group 08 Hitches

For Use with 18' through 24'

7921RS	Cast Single Lip Hitch for 1-7/8" Pin Hole, Category III	29	160.00
7924RS	Double Lip Hitch with 1-9/16" Pin Hole	21	160.00

For Use with 27'

6933RS	Cast Single Lip Hitch for 2" Pin Hole, Category IV	29	160.00
7960RS	Double Lip Hitch with 1-7/8" Pin Hole	22	160.00

For Use with 29' through 32'

6933RS	Cast Single Lip Hitch for 2" Pin Hole, Category IV	29	160.00
7960RS	Double Lip Hitch with 1-7/8" Pin Hole	22	160.00
7921RS	Cast Single Lip Hitch for 1-7/8" Pin Hole, Category III	29	160.00
7924RS	Double Lip Hitch with 1-9/16" Pin Hole	21	160.00

Optional Equipment For Current Machines Only

Dual Wheel Kit for 18' and 21' Discs

7500001YS	Dual Wheel Kit with Two New 8 Ply, 11L x 15 Tubeless Tires	270	744.00
7500032YS	Dual Wheel Kit with Two New 12 Ply, 11L x 15 Tubeless Tires	288	891.00

Rear Tow Hitch for 18', 21'(NC), and 24'(NC) Discs (not available with finishing attachments)

7937BS	Rear Tow Hitch with Hitch Slide and Ball Joint	83	467.00
7933BS	Rear Tow Hitch with Ball Joint	61	267.00

Rear Tow Hitch for 21'(WC), 24'(WC), 27', 29' and 32' Discs (not available with finishing attachments)

7939BS	Rear Tow Hitch with Hitch Slide and Ball Joint	84	558.00
7938BS	Rear Tow Hitch with Ball Joint	57	356.00
7500271BS	Wheel bearing shields, "Delta Special"	100	216.00
18663BS	Gang Wrench, 2-3/4"	20	89.00
12634PLS	Wiring Harness to Plug Soil Conditioner Lights into Implement Lights		223.00

1234 SERIES THREE SECTION FLEXIBLE TANDEM DISCS

ORDER CODE	DESCRIPTION	APPROX. WEIGHT (LBS)	LIST PRICE

THREE ROW COIL TINE FINISHING HARROWS FOR 1234 SERIES DISCS

Spring Loaded Drag Arms with all Required Hardware and Mounting Brackets
Three Rows of 3/8" x 16" Coil Tines on 7½" Centers, 2½" Spacing Overall, with Angle Adjustment and Backup Protection
15" Spacing Between Rows

17001456RS	SF1234-18	950	4,752.00
17001457RS	SF1234-21(NC)	985	4,883.00
17001458RS	SF1234-21(WC)	1098	5,465.00
17001459RS	SF1234-24(NC)	1059	5,533.00
17001460RS	SF1234-24(WC)	1135	5,599.00
17001461RS	SF1234-27	1184	5,732.00
17001462RS	SF1234-29	1640	8,060.00
17001463RS	SF1234-32	1683	8,114.00

THREE ROW COIL TINE FINISHING HARROWS - HEAVY DUTY

Spring Loaded Drag Arms with all Required Hardware and Mounting Brackets
Three Rows of 1/2" x 22" Coil Tines on 12" Centers, 4" Spacing Overall, with Angle Adjustment and Backup Protection
13" Spacing Between Rows

17001774RS	SF1234-18 Heavy Duty	1600	6,421.00
17001775RS	SF1234-21 (NC) Heavy Duty	1700	7,164.00
17001776RS	SF1234-21 (WC) Heavy Duty	1650	7,374.00
17001777RS	SF1234-24 (NC) Heavy Duty	1800	7,411.00
17001778RS	SF1234-24 (WC) Heavy Duty	1750	7,815.00
17001779RS	SF1234-27 Heavy Duty	2000	8,042.00
17001780RS	SF1234-29 Heavy Duty	1900	7,929.00
17001781RS	SF1234-32 Heavy Duty	2550	9,593.00

MODEL	LEFT WING	CENTER	RIGHT WING
SF1234-18	67½"	82½"	67½"
SF1234-21(NC)	82½"	82½"	82½"
SF1234-21(WC)	67½"	67½" 52½"	67½"
SF1234-24(NC)	97½"	97½"	97½"
SF1234-24(WC)	82½"	67½" 52½"	82½"
SF1234-27	97½"	67½" 52½"	97½"
SF1234-29	37½" 67½"	67½" 52½"	67½" 37½"
SF1234-32	67½" 52½"	67½" 52½"	52½" 67½"

Note: Rear Tow Hitches Are Not Available With Finishing Attachments.
Above Harrows will not fit on Model 1232

Mississippi State Contract Discount: 5%

1300 SERIES FLEXIBLE OFFSET DISCS

F.O.B. Beloit, KS

STANDARD CONFIGURATION

4 New 8 Ply, 11L x 15 Tubeless Tires on 14’ and 16’ Discs
4 15" x 10" Six Bolt Wheels and Hubs with Zerk, 2" Spindles and Triple Lip Seals on 14’ and 16’ Discs
6 New 8 Ply, 11L x 15 Tubeless Tires on 18’ Discs
6 15" x 10" Six Bolt Wheels and Hubs with Zerk, 2" Spindles and Triple Lip Seals on 18’ Discs
1 4" x 16" Lift Cylinder with Hydraulic Depth Stop and 1/2" Hydraulic Hose on All Sizes
1 Wing Stabilizer on 14’ and 16’ Discs
1 Fold Kit Assembly with 4" x 30" Cylinder and 3/8" Hydraulic Hose on 18’ Discs
1 Double Lip Hitch with 1-1/4" Hole on All Sizes (7500075S)
1 Tongue Jack on All Sizes
1 Heavy-duty Gauge Wheel with 8.00 x 10 New Tire and Tube, Five Bolt Hub and Triple Lip Seal on All Discs
High Strength 1-3/4" Round Stress Proof Gang Shafts
Triple Sealed Greaseable Trunnion Gang Bearings
C-Flex Bearing Standards
Adjustable Dual Scrapers at Bearing Standards on All Sizes
6" wide Rigid Scraper Assemblies at All Other Disc Locations
Safety Equipment Including: Light Kit, SMV Emblem

1321 SERIES
TWO SECTION FLEXIBLE OFFSET DISCS

DISC MODEL	SF1321-14’	SF1321-16’	SF1321-18’
FRAME SIZE	7 – 7	8 – 8	10 – 8
TRANSPORT WIDTH	9’ 10"	10’ 9"	13’
TRANSPORT HEIGHT	11’ 11"	12’ 5"	12’ 7"
STD GANGS Front / Rear	6/6	6/6	9/7
BLADES 8½" Front / Rear	21/21	23/23	26/26

1300 SERIES FLEXIBLE OFFSET DISCS

These prices reflect the standard configuration. If items other than those listed in the standard configuration are ordered, then the quoted price below will change.

For Quotation Purposes Only – Please Order Items from the Groups on the Next Pages

MODEL NUMBER	CUTTING WIDTH	BLADE DIAMETER	EST. WEIGHT	¼" THICK (4 GA) BLADES	6 GAUGE BLADES
SMOOTH BLADES - 8½" BLADE SPACING					
1321 SERIES TWO SECTION FLEXIBLE OFFSET DISC					
SF1321-14	14' 9"	22"	6749	27,849.00	27,424.00
SF1321-14	14' 9"	24"	6879	28,273.00	27,753.00
SF1321-14	14' 9"	26"	7169	29,455.00	N/A
SF1321-16	16'	22"	6699	29,862.00	29,396.00
SF1321-16	16'	24"	7149	30,328.00	29,759.00
SF1321-16	16'	26"	7457	31,622.00	N/A
SF1321-18	18' 6"	22"	8807	35,914.00	35,388.00
SF1321-18	18' 6"	24"	9132	36,441.00	35,798.00
SF1321-18	18' 6"	26"	9485	37,903.00	N/A

1300 SERIES FLEXIBLE OFFSET DISCS

ORDER CODE	DESCRIPTION	APPROX. WEIGHT (LBS)	LIST PRICE
	Select One Order Code from Each Group, 01 through 06.		
Group 01	**Base Machine**		
SF1321-14	13211403, 14' Two Section Flexible Offset Disc	3521	16,929.00
SF1321-16	13211603, 16' Two Section Flexible Offset Disc	3344	18,040.00
SF1321-18	13211803, 18' Two Section Flexible Offset Disc	4557	22,131.00
Group 02	**Gangs** **Smooth Blades, 8½" Blade Spacing**		
SF1321-14			
12300228S	22" 6 Gauge, C-Flex	2380	8,035.00
12300140S	22" 4 Gauge, C-Flex	2380	8,460.00
12300101S	24" 6 Gauge, C-Flex	2780	8,364.00
12300135S	24" 4 Gauge, C-Flex	2780	8,884.00
12300589S	26" 4 Gauge, C-Flex	3070	10,066.00
SF1321-16			
12300247S	22" 6 Gauge, C-Flex	2747	8,799.00
12300255S	22" 4 Gauge, C-Flex	2747	9,265.00
12300082S	24" 6 Gauge, C-Flex	3197	9,162.00
12300073S	24" 4 Gauge, C-Flex	3197	9,731.00
12300628S	26" 4 Gauge, C-Flex	3505	11,025.00
SF1321-18			
12300058S	22" 6 Gauge, C-Flex	3460	9,947.00
12300273S	22" 4 Gauge, C-Flex	3460	10,473.00
12300098S	24" 6 Gauge, C-Flex	3785	10,357.00
12300122S	24" 4 Gauge, C-Flex	3785	11,000.00
12300653S	26" 4 Gauge, C-Flex	4138	12,462.00

1300 SERIES FLEXIBLE OFFSET DISCS

ORDER CODE	DESCRIPTION	APPROX. WEIGHT (LBS)	LIST PRICE

Select One Order Code from Each Group, 01 through 05.

Group 03 Tires

MODEL	ORDER QUANTITY	
	CENTERS	WINGS
SF1321-14	3	1
SF1321-16	3	1
SF1321-18	4	2

3058YS	(1) New 8 Ply, 11L Tubeless Tire, 6 Bolt Wheel	65	319.00
3587YS	(1) New 12 Ply, 11L Tubeless Tire, 6 Bolt Wheel	74	350.00

Group 04 Hitches

7500075S	Double Lip Hitch with 1-1/4" Pin Hole	20	147.00
7500074S	Single Lip Hitch with 1-7/8” Pin Hole	20	147.00
7500076S	Single Lip Hitch with 1-1/4" Pin Hole	20	147.00

Group 05 Scrapers

12000009S	Scrapers for SF1321-14	298	1,037.00
12000010S	Scrapers for SF1321-16	328	1,134.00
12000031S	Scrapers for SF1321-18	380	1,249.00

Optional Equipment For Current Machines Only

Dual Wheel Kit for 14’ and 16’ Discs

7500035YS	One Hub, Tire and Wheel - New 8 ply, 11L x 15 Tire	100	377.00
7500478YS	One Hub, Tire and Wheel - New 12 ply, 11L x 15 Tire	110	395.00

Hydraulic Fold Kit for 14’ and 16’ Discs

2500004S	Hydraulic Fold Kit with 4" x 30" Hydraulic Cylinder and 3/8" Hydraulic Hose	200	897.00
18663BS	Gang Wrench, 2-3/4"	20	89.00
12634PLS	Wiring Harness to Plug Soil Conditioner Lights into Implement Lights		223.00

1300 SERIES FLEXIBLE OFFSET DISCS

ORDER CODE	DESCRIPTION	APPROX. WEIGHT (LBS)	LIST PRICE

THREE ROW COIL TINE FINISHING HARROWS FOR 1300 SERIES DISCS

Spring Loaded Drag Arms with all Required Hardware and Mounting Brackets
Three Rows of 3/8" x 16" Coil Tines on 7½" Centers, 2½" Spacing Overall, with Angle Adjustment and Backup Protection
15" Spacing Between Rows

MODEL	CENTER	RIGHT WING
SF1321-14	97½"	82½"
SF1321-16	97½"	97½"
SF1321-18	52½" 67½"	97½"

17001379RS	SF1321-14	722	4,092.00
17001380RS	SF1321-16	748	4,126.00
17001381RS	SF1321-18	965	5,140.00

1435 SERIES THREE SECTION FLEXIBLE DISCS

INCLUDES SPLIT-WING SERIES
F.O.B. Beloit, KS

STANDARD CONFIGURATION

6 11L x 15, 12 Ply Tubeless Tires with Six Bolt Wheels and 2” Slip in Spindles (21’) (3587YS)
8 11L x 15, 12 Ply Tubeless Tires with Six Bolt Wheels and 2” Slip in Spindles (23’) (3587YS)
4 12.5L x 15, GY - FI, Load Range F with Eight Bolt Wheels and 2-1/4" Slip in Spindles (Centers 26’ through 36’) (5555YS)
4 12.5L x 15, GY - FI, Load Range F with Eight Bolt Wheels and 2-3/4” Slip in Spindles (Centers 37' through 40') (5579YS)
4 12.5L x 15, 12 Ply Tubeless Tires with Six Bolt Wheels and 2” Slip in Spindles (Wings 26’-40’) (3588S)
High Strength 1-3/4" Round Stress Proof Gang Shafts
Triple Sealed, Greaseable, Trunnion Style Gang Bearings
C-Flex Bearing Standards (1-1/4" X 2-1/2")
4" wide Rigid Scrapers Mounted to C-Flex
Maintenance Free Lift System with 5-1/2” Lift Axle on Center Section
1 Cast Single Lip Hitch with 1-7/8” Pin Hole, Category III (21’ through 29’) (7921RS)
1 Cast Single Lip Hitch with 2" Pin Hole, Category IV (30’ through 40’) (6933RS)
1 Rephasing Lift System with Single Point Depth Control
2 Walking Tandems with Greaseable Tapered Roller Bearings (Center) all Sizes
2 Walking Tandems with Greaseable Tapered Roller Bearings (Wings) 23’ through 40’
Single Wing Tires on 21’
2 Heavy-duty Gauge Wheels with 8.00 x 10 New Tires and Tubes, Five Bolt Hub and Triple Lip Seal
1 Adjustment Wrench
1 Self-leveling Hitch Assembly with Manual Screw Type Adjustment 21’-29’ (2500129RS), 30’-40’ (2500130RS)
1 Tongue Jack
Safety Equipment Including: Light Kit, SMV Emblem, and Safety Chain

1435 SERIES
THREE SECTION FLEXIBLE TANDEM DISCS

Model Number	1435-21	1435-23	1435-26	1435-29	1435-30	1435-33	1435-36	1435-37SW Current Production	1435-40SW Current Production
Transport Width	13’ 5"	13’ 5"	13’ 5"	13’ 5"	17’ 8"	17’ 8"	17’ 8"	18' 2"	18' 2"
Transport Height	9’ 4”	10’ 6"	11’ 9”	13’ 5”	11’ 9”	13’ 5”	15’ 2”	13' 6"	13' 6"
Gang Shafts	8	8	8	12	8	12	12	12	12
Standard Gangs Front / Rear	10/10	12/10	12/10	14/12	12/12	14/14	16/14	16/16	18/18
Disc Blades Front / Rear	28/30	32/34	36/38	40/42	42/44	46/48	50/52	52/54	56/58

The 1435-21 through 1435-36 are Subject to Availability

SUNFLOWER

Mississippi State Contract Discount: 5%

1435 SERIES THREE SECTION FLEXIBLE DISCS

These prices reflect the standard configuration. If items other than those listed in the standard configuration are ordered, then the quoted price below will change.

For Quotation Purposes Only – Please Order Items from the Groups on the Next Pages

MODEL NUMBER	FRAME SIZE	CUTTING WIDTH	BLADE DIAMETER	EST. WEIGHT	¼" THICK (4 GA) BLADES	6 GAUGE BLADES
SMOOTH BLADES – 8-3/4" BLADE SPACING						
SF1435-21	6-9-6	20' 7''	22"	12163	45,823.00	45,091.00
SF1435-21	6-9-6	20' 7''	24"	12500	46,519.00	45,683.00
SF1435-23	7-9-7	23' 4"	22"	13707	50,088.00	49,394.00
SF1435-23	7-9-7	23' 4"	24"	14190	51,052.00	49,933.00
SF1435-26	8 ½-9-8 ½	26' 2"	22"	14456	55,321.00	54,561.00
SF1435-26	8 ½-9-8 ½	26' 2"	24"	14886	56,235.00	55,160.00
SF1435-29	10-9-10	28' 11"	22"	15794	59,740.00	59,090.00
SF1435-29	10-9-10	28' 11"	24"	16270	60,938.00	59,624.00
SF1435-30	8 ½-13-8 ½	30' 4"	22"	17046	61,916.00	60,581.00
SF1435-30	8 ½-13-8 ½	30' 4"	24"	17546	62,999.00	61,755.00
SF1435-33	10-13-10	33' 1"	22"	19027	65,917.00	64,550.00
SF1435-33	10-13-10	33' 1"	24"	19573	67,116.00	65,740.00
SF1435-36	11 ½-13-11 ½	35' 10"	22"	19387	68,089.00	66,379.00
SF1435-36	11 ½-13-11 ½	35' 10"	24"	19980	69,579.00	67,825.00
SF1435-37 SW	5-7-13-7-5	37' 3"	22"	23352	78,552.00	76,592.00
SF1435-37 SW	5-7-13-7-5	37' 3"	24"	23978	80,119.00	78,160.00
SF1435-40 SW	6½-7-13-7-6½	40'	22"	23929	83,112.00	80,947.00
SF1435-40 SW	6½-7-13-7-6½	40'	24"	24590	83,649.00	81,485.00
ROLLABLE BORON, SMOOTH BLADES – 8-3/4" BLADE SPACING (Not Recommended in Rocky Conditions)						
SF1435-21	6-9-6	20' 7''	24"	12500	46,647.00	N/A
SF1435-23	7-9-7	23' 4"	24"	14190	51,196.00	N/A
SF1435-26	8 ½-9-8 ½	26' 2"	24"	14886	56,389.00	N/A
SF1435-29	10-9-10	28' 11"	24"	16270	61,114.00	N/A
SF1435-30	8 ½-13-8 ½	30' 4"	24"	17546	63,173.00	N/A
SF1435-33	10-13-10	33' 1"	24"	19573	67,313.00	N/A
SF1435-36	11 ½-13-11 ½	35' 10"	24"	19980	69,792.00	N/A
SF1435-37 SW	5-7-13-7-5	37' 3"	24"	23978	80,353.00	N/A
SF1435-40 SW	6½-7-13-7-6½	40'	24"	24590	83,889.00	N/A

DUE TO THE AGGRESSIVE 20°GANG ANGLE OF THE 1435,
4 GAUGE BLADES ARE STRONGLY RECOMMENDED IN MOST FIELD CONDITIONS.

The 1435-21 through 1435-36 are Subject to Availability

1435 SERIES THREE SECTION FLEXIBLE DISCS

ORDER CODE	DESCRIPTION	APPROX. WEIGHT (LBS)	LIST PRICE

Select One Order Code from Each Group, 01 through 07.

Group 01 Base Machine

SF1435-21	14352100, 21' Three Section Flexible Tandem Disc	5793	22,584.00
SF1435-23	14352300, 23' Three Section Flexible Tandem Disc	6305	24,453.00
SF1435-26	14352600, 26' Three Section Flexible Tandem Disc	7442	27,289.00
SF1435-29	14352900, 29' Three Section Flexible Tandem Disc	7800	29,178.00
SF1435-30	14353000, 30' Three Section Flexible Tandem Disc	7573	31,099.00
SF1435-33	14353300, 33' Three Section Flexible Tandem Disc	7931	32,278.00
SF1435-36	14353600, 36' Three Section Flexible Tandem Disc		32,600.00
SF1435-37SW	14353700, 37' Split Wing Three Sect Flexible Tandem Disc		38,375.00
SF1435-40SW	14354000, 40' Split Wing Three Sect Flexible Tandem Disc		41,175.00

Group 02 Gangs Smooth Blades, 8-3/4" Blade Spacing

SF1435-21

12301568S	22" 6 Gauge, C-Flex	5448	15,790.00
12301567S	22" 4 Gauge, C-Flex	5797	16,522.00
12301570S	24" 6 Gauge, C-Flex	5683	16,382.00
12301569S	24" 4 Gauge, C-Flex	6134	17,218.00
12301621S	24" 4 Gauge, C-Flex with Rollable Boron Blades	6134	17,346.00

SF1435-23

12301572S	22" 6 Gauge, C-Flex	6532	17,524.00
12301571S	22" 4 Gauge, C-Flex	6929	18,218.00
12301574S	24" 6 Gauge, C-Flex	6799	18,063.00
12301573S	24" 4 Gauge, C-Flex	7312	19,182.00
12301622S	24" 4 Gauge, C-Flex with Rollable Boron Blades	7312	19,326.00

SF1435-26

12301576S	22" 6 Gauge, C-Flex	5719	18,831.00
12301575S	22" 4 Gauge, C-Flex	6165	19,591.00
12301578S	24" 6 Gauge, C-Flex	6019	19,430.00
12301577S	24" 4 Gauge, C-Flex	6595	20,505.00
12301623S	24" 4 Gauge, C-Flex with Rollable Boron Blades	6595	20,659.00

SF1435-29

12301580S	22" 6 Gauge, C-Flex	6651	21,471.00
12301579S	22" 4 Gauge, C-Flex	7145	22,121.00
12301582S	24" 6 Gauge, C-Flex	6983	22,005.00
12301581S	24" 4 Gauge, C-Flex	7621	23,319.00
12301624S	24" 4 Gauge, C-Flex with Rollable Boron Blades	7621	23,495.00

SF1435-30

12301584S	22" 6 Gauge, C-Flex	8107	20,896.00
12301583S	22" 4 Gauge, C-Flex	8624	22,231.00
12301586S	24" 6 Gauge, C-Flex	8455	22,070.00
12301585S	24" 4 Gauge, C-Flex	9124	23,314.00
12301625S	24" 4 Gauge, C-Flex with Rollable Boron Blades	9124	23,488.00

The 1435-21 through 1435-36 are Subject to Availability

1435 SERIES THREE SECTION FLEXIBLE DISCS

ORDER CODE	DESCRIPTION	APPROX. WEIGHT (LBS)	LIST PRICE
	Select One Order Code from Each Group, 01 through 07.		
Group 02	**Gangs Smooth Blades, 8-3/4" Blade Spacing - Continued**		
SF1435-33			
12301588S	22" 6 Gauge, C-Flex	9682	23,686.00
12301587S	22" 4 Gauge, C-Flex	10247	25,053.00
12301590S	24" 6 Gauge, C-Flex	10062	24,876.00
12301589S	24" 4 Gauge, C-Flex	10793	26,252.00
12301626S	24" 4 Gauge, C-Flex with Rollable Boron Blades	10793	26,449.00
SF1435-36			
12301592S	22" 6 Gauge, C-Flex	9993	25,193.00
12301591S	22" 4 Gauge, C-Flex	10607	26,903.00
12301594S	24" 6 Gauge, C-Flex	10406	26,639.00
12301593S	24" 4 Gauge, C-Flex	11200	28,393.00
12301627S	24" 4 Gauge, C-Flex with Rollable Boron Blades	11200	28,606.00
SF1435-37 SW			
12301614S	22" 6 Gauge, C-Flex		27,692.00
12301613S	22" 4 Gauge, C-Flex		29,652.00
12301616S	24" 6 Gauge, C-Flex		29,260.00
12301615S	24" 4 Gauge, C-Flex		31,219.00
12301628S	24" 4 Gauge, C-Flex with Rollable Boron Blades		31,453.00
SF1435-40 SW			
12301618S	22" 6 Gauge, C-Flex		29,247.00
12301617S	22" 4 Gauge, C-Flex		31,412.00
12301620S	24" 6 Gauge, C-Flex		29,785.00
12301619S	24" 4 Gauge, C-Flex		31,949.00
12301629S	24" 4 Gauge, C-Flex with Rollable Boron Blades		32,189.00

The 1435-21 through 1435-36 are Subject to Availability

1435 SERIES THREE SECTION FLEXIBLE DISCS

ORDER CODE	DESCRIPTION	APPROX. WEIGHT (LBS)	LIST PRICE

Select One Order Code from Each Group, 01 through 07.

Group 03 Tires

MODEL	ORDER QUANTITY	CENTERS	ORDER QUANTITY	WINGS
SF1435-21	4	3587YS	2	3587YS
SF1435-23	4	3587YS	4	3587YS
SF1435-26 SF1435-29	4	5555YS	4	3588S or 5555YS
SF1435-30 SF1435-33 SF1435-36	4	5555YS	4	3588S or 5555YS
SF1435-37 SW SF1435-40 SW	4	5579YS	4	3588S or 5555YS

Note on ordering Wing Lift Assemblies (Group 05)

26' to 36' Standard Lift Assembly requires (4) 5555YS + (4) 3588S
Heavy Duty Lift Assembly requires (8) 5555YS

37' to 40' Standard Lift Assembly requires (4) 5579YS + (4) 3588S
Heavy Duty Lift Assembly requires (4) 5579YS + (4) 5555YS

All Wheels are 15” x 10”; All Tires are Tubeless

3587YS	(1) New 12 Ply, 11L Tire, 6 Bolt Wheel (2" Spindle)	74	350.00
3588S	(1) New 12 Ply, 12.5L Tire, 6 Bolt Wheel (2" Spindle)	80	367.00
5555YS	(1) New 12.5L, GY - FI, Load Range F Tire, 8 Bolt Wheel, . . (2-1/4" Spindle)	100	518.00
5579YS	(1) New 12.5L, GY - FI, Load Range F Tire, 8 Bolt Wheel, . . (2-3/4" Spindle)	110	534.00

Group 04 Lifts - Center

7500448RS	For 21’ and 23’, (2" Spindle) Standard Lift Assembly	665	2,080.00
7500449RS	For 26’ and 29’, (2-1/4" Spindle) Standard Lift Assembly . . .	730	2,364.00
7500451RS	For 30’, 33’ and 36’, (2-1/4" Spindle) Standard Lift Assembly .	840	2,509.00
7500484RS	For 37’ and 40’, (2-3/4" Spindle) Standard Lift Assembly . . .	840	4,384.00

Group 05 Lifts - Wings

7500466RS	For 21’ Standard Lift Assembly for Wings, ... with 6 Bolt Hubs (2” Spindle)	335	1,900.00
7500450RS	For 23’ through 40’ Standard Lift Assembly for Walking . . . . Tandem Wings, with 6 Bolt Hubs (2” Spindle)	585	1,900.00
7500453RS	For 26’ through 40' Heavy Duty Lift Assembly for Walking . . Tandem Wings, with 8 Bolt Hubs (2-1/4" Spindle) ***See note above on required tires for the Heavy Duty Lift Assy***	660	2,331.00

The 1435-21 through 1435-36 are Subject to Availability

SUNFLOWER

Mississippi State Contract Discount: 5%

1435 SERIES THREE SECTION FLEXIBLE DISCS

ORDER CODE	DESCRIPTION	APPROX. WEIGHT (LBS)	LIST PRICE

Select One Order Code from Each Group, 01 through 07.

Group 06 Levelers

21' through 29' Discs

2500129RS	Self-Leveling Hitch with Manual Screw Adjustment	100	477.00
2500131RS	Hydraulic Self-Leveling System with Level Indicator	155	1,440.00

30' through 40' Discs

2500130RS	Self-Leveling Hitch with Manual Screw Adjustment	100	477.00
2500132RS	Hydraulic Self-Leveling System with Level Indicator	155	1,440.00

Group 07 Hitches

21' through 26' Discs

7921RS	Cast Single Lip Hitch for 1-7/8" Pin Hole, Category III	29	160.00
7924RS	Double Lip Hitch with 1-9/16" Pin Hole	21	160.00

29' Discs

7921RS	Cast Single Lip Hitch for 1-7/8" Pin Hole, Category III	29	160.00
7960RS	Double Lip Hitch with 1-7/8" Pin Hole	22	160.00

30' through 40' Discs

6933RS	Cast Single Lip Hitch for 2" Pin Hole, Category IV	29	160.00
7960RS	Double Lip Hitch with 1-7/8" Pin Hole	22	160.00

OPTIONAL EQUIPMENT - For Current Machines ONLY

13767RS	Rear Tow Hitch with Hitch Slide and Ball Joint (Not available with finishing attachment)	199	1,008.00
2500181RS	Rear Tow Hitch Hydraulic Package	40	393.00
18663BS	Gang Wrench, 2-3/4"	20	89.00
12634PLS	Wiring Harness to Plug Soil Conditioner Lights into Implement Lights		223.00

The 1435-21 through 1435-36 are Subject to Availability

1435 SERIES THREE SECTION FLEXIBLE DISCS

ORDER CODE	DESCRIPTION	APPROX. WEIGHT (LBS)	LIST PRICE

3 ROW COIL TINE FINISHING HARROWS - STANDARD DUTY

Spring Loaded Drag Arms with all Required Hardware and Mounting Brackets

Three Rows of 3/8" x 16" Coil Tines on 7½" Centers, 2½" Spacing Overall, with Angle Adjustment and Backup Protection

15" Spacing Between Rows

MODEL	LEFT WING	CENTER	RIGHT WING
SF1435-21	67 ½"	52 ½" 52 ½"	67 ½"
SF1435-23	82 ½"	52 ½" 52 ½"	82 ½"
SF1435-26	97 ½"	52 ½" 52 ½"	97 ½"
SF1435-29	52 ½" 52 ½"	52 ½" 52 ½"	52 ½" 52 ½"
SF1435-30	97 ½"	82 ½" 67 ½"	97 ½"
SF1435-33	52 ½" 52 ½"	82 ½" 67 ½"	52 ½" 52 ½"
SF1435-36	52 ½" 67 ½"	82 ½" 67 ½"	67 ½" 52 ½"
SF1435-37 SW	52 ½" 82 ½"	82 ½" 67 ½"	82 ½" 67 ½"
SF1435-40 SW	67 ½" 82 ½"	82 ½" 67 ½"	82 ½" 67 ½"

17001350RS	SF1435-21	1312	6,317.00
17001351RS	SF1435-23	1349	6,452.00
17001352RS	SF1435-26	1401	6,485.00
17001353RS	SF1435-29	1621	6,870.00
17001354RS	SF1435-30	1679	7,273.00
17001355RS	SF1435-33	1808	7,642.00
17001701RS	SF1435-36	2137	9,390.00
17001724RS	SF1435-37 Split Wing	2257	9,655.00
17001726RS	SF1435-40 Split Wing	2332	9,944.00

The 1435-21 through 1435-36 are Subject to Availability

1435 SERIES THREE SECTION FLEXIBLE DISCS

ORDER CODE	DESCRIPTION	APPROX. WEIGHT (LBS)	LIST PRICE

3 ROW COIL TINE FINISHING HARROWS - HEAVY DUTY

Spring Loaded Drag Arms with all Required Hardware and Mounting Brackets
Three Rows of 1/2" x 22" Coil Tines on 12" Centers, 4" Spacing Overall, with Angle Adjustment and Backup Protection
13" Spacing Between Rows

MODEL	LEFT WING	CENTER	RIGHT WING
SF1435-21	6'	10'	6'
SF1435-23	8'	8'	8'
SF1435-26	10'	8'	10'
SF1435-29	10'	10'	10'
SF1435-30	10'	6' 6'	10'
SF1435-33	10'	6' 8'	10'
SF1435-36	10'	8' 8'	10'
SF1435-37 SW	6' 6'	6' 8'	6' 6'
SF1435-40 SW	6' 8'	6' 6'	8' 6'

17001728RS	SF1435-21	1652	7,164.00
17001729RS	SF1435-23	1658	7,192.00
17001730RS	SF1435-26	1802	7,590.00
17001731RS	SF1435-29	1831	7,733.00
17001732RS	SF1435-30	2160	9,306.00
17001733RS	SF1435-33	2190	9,364.00
17001734RS	SF1435-36	2230	9,458.00
17001735RS	SF1435-37 Split Wing	2895	12,756.00
17001736RS	SF1435-40 Split Wing	2903	11,806.00

The 1435-21 through 1435-36 are Subject to Availability

1435 SERIES THREE SECTION FLEXIBLE DISCS

ORDER CODE	DESCRIPTION	APPROX. WEIGHT (LBS)	LIST PRICE

THREE ROW SPIKE DRAG FINISHING HARROWS FOR 1435 DISCS

All Required Hardware and Mounting Brackets

Three Rows of 3/4" x 11" Square Spikes on 9" Centers, 3" Spacing Overall

MODEL	LEFT WING	CENTER	RIGHT WING
SF1435-21	6 ½'	8 ¾'	6 ½'
SF1435-23	8'	8'	8'
SF1435-26	8 ¾'	8 ¾'	8 ¾'
SF1435-29	10 ¼'	8'	10 ¼'
SF1435-30	8'	8 ¾' 5'	8'
SF1435-33	9 ½'	8 ¾' 5'	9 ½'
SF1435-36	5' 5'	8 ¾' 5'	5' 5'
SF1435-37 SW	5' 6 ½'	8 ¾' 5'	6 ½' 5'
SF1435-40 SW	6 ½' 6 ½'	8 ¾' 5'	6 ½' 6 ½'

17000945RS	SF1435-21	1320	5,337.00
17000946RS	SF1435-23	1373	5,398.00
17000947RS	SF1435-26	1415	5,434.00
17000948RS	SF1435-29	1511	5,742.00
17000949RS	SF1435-30	1609	6,163.00
17000950RS	SF1435-33	1718	6,429.00
17001700RS	SF1435-36	2209	8,625.00
17001725RS	SF1435-37 Split Wing	2271	8,766.00
17001727RS	SF1435-40 Split Wing	2456	9,024.00

Note: Rear Tow Hitches Are Not Available With Finishing Attachments.

The 1435-21 through 1435-36 are Subject to Availability

1435 SERIES THREE SECTION FLEXIBLE DISCS

ORDER CODE	DESCRIPTION	APPROX. WEIGHT (LBS)	LIST PRICE

DUAL SCRAPER OPTION FOR 1435 DISC HARROWS

Order Both Catalog Numbers for Full Front and Rear Sets

For 1435-21			
16884BS	Front Dual Scraper, 8-3/4" Spacing, set of 10	78	319.00
16885BS	Rear Dual Scraper, 8-3/4" Spacing, set of 8	62	255.00
For 1435-23			
16886BS	Front Dual Scraper, 8-3/4" Spacing, set of 12	93	382.00
16887BS	Rear Dual Scraper, 8-3/4" Spacing, set of 10	78	319.00
For 1435-26			
16888BS	Front Dual Scraper, 8-3/4" Spacing, set of 12	93	382.00
16889BS	Rear Dual Scraper, 8-3/4" Spacing, set of 10	78	319.00
For 1435-29			
16890BS	Front Dual Scraper, 8-3/4" Spacing, set of 14	108	445.00
16891BS	Rear Dual Scraper, 8-3/4" Spacing, set of 12	93	382.00
For 1435-30			
16892BS	Front Dual Scraper, 8-3/4" Spacing, set of 12	93	382.00
16893BS	Rear Dual Scraper, 8-3/4" Spacing, set of 12	93	382.00
For 1435-33			
16894BS	Front Dual Scraper, 8-3/4" Spacing, set of 14	108	445.00
16895BS	Rear Dual Scraper, 8-3/4" Spacing, set of 14	108	445.00
For 1435-36			
16896BS	Front Dual Scraper, 8-3/4" Spacing, set of 16	124	511.00
16897BS	Rear Dual Scraper, 8-3/4" Spacing, set of 14	108	445.00
For 1435-37SW			
16898BS	Front Dual Scraper, 8-3/4" Spacing, set of 16	124	511.00
16899BS	Rear Dual Scraper, 8-3/4" Spacing, set of 18	139	574.00
For 1435-40SW			
16900BS	Front Dual Scraper, 8-3/4" Spacing, set of 18	139	574.00
16901BS	Rear Dual Scraper, 8-3/4" Spacing, set of 18	139	574.00

The 1435-21 through 1435-36 are Subject to Availability

1436 SERIES THREE SECTION FLEXIBLE DISCS
F.O.B. Beloit, KS

STANDARD CONFIGURATION

6 11L x 15, GY - FI Tires with Six Bolt Wheels and 2” Slip in Spindles (21’) (3587YS)
8 11L x 15, GY - FI Tubeless Tires with Six Bolt Wheels and 2” Slip in Spindles (24’) (3587YS)
8 12.5L x 15, GY - FI, Load Range F with Eight Bolt Wheels and 2-1/4" Slip in Spindles (Centers & Wings 26’ & 29’)
4 380/55R with Eight Bolt Wheels and 2-3/4” Slip in Spindles (Centers 31’ through 36’)
4 12.5L x 15, 12 Ply Tubeless Tires with Six Bolt Wheels and 2-1/4" Slip in Spindles (Wings 31’ through 36’) (3588S)
High Strength 1-3/4" Round Stress Proof Gang Shafts
Triple Sealed, Greaseable, Trunnion Style Gang Bearings
C-Flex Bearing Standards (1-1/4" X 2-1/2")
4" wide Rigid Scrapers Mounted to C-Flex
Maintenance Free Lift System with 5-1/2” Lift Axle on Center Section
1 Cast Single Lip Hitch with 2-3/4" Pin Hole, Category V Hitch (21’ through 36’)
1 Rephasing Lift System with Single Point Depth Control
2 Walking Tandems with Greaseable Tapered Roller Bearings (Center) all Sizes
2 Walking Tandems with Greaseable Tapered Roller Bearings (Wings) 24’ through 36’
Single Wing Tires on 21’
2 Heavy-duty Gauge Wheels with 8.00 x 10 New Tires and Tubes, Five Bolt Hub and Triple Lip Seal
24" x 1/4" Boron Blades, 8.75” blade spacing 20° Gang Angle Front and 18° Gang Angle Rear
1 Adjustment Wrench
1 Hydraulic Self-Leveling System with Level Indicator 21'-29' (2500193RS)
2 Hydraulic Self-Leveling System with Level Indicator 31'-36'(2500192RS)
1 Tongue Jack
LED Lighting Package
Safety Equipment Including: SMV Emblem, and Safety Chain

STANDARD CONFIGURATION (SPLIT WING)

4 New 380/55R x 16.5 Tubeless Tires with Eight Bolt Wheels and 2-3/4" Slip in Spindles (Centers 33’ and 38’)
(16949YS) 4 New 12.5L (GY - FI - I) Tubeless Tires with Eight Bolt Wheel and 2-1/4" Slip in Spindles
(Wings 33’ and 38’) (5555YS)
1 Single Point Depth Control with Rephasing Lift System
Hydraulic Self-Leveling system with Level Indicator (single leveler on 33’ tool dual leveler on 38’ tool)
Center Lifts (2 3/4" Spindle)
Wing Lifts (2 1/4" Spindle)
Heavy Duty Gauge Wheels with 8.00 x 10 tires
26”x 1/4" Boron Blades, 8.75” blade spacing 20° Gang Angle Front and 18° Gang Angle Rear
High Strength 1-3/4” Round Stress Proof Gang Shafts
C-Flex Bearing Standards with Triple Sealed Trunnion Bearings Maintenance Free Lift and Fold Systems
1 2 ¾" Disc Gang Wrench
Safety Equipment including: Light Kit, SMV Emblem and Safety Chain

1436 SERIES 8-3/4" Blade Spacing
THREE SECTION FLEXIBLE TANDEM DISCS

Model Number	1436-21	1436-24	1436-27	1436-29	1436-31	1436-33	1436-33SW	1436-36	1436-38SW
Transport Width	13' 6"	13' 6"	13' 6"	13' 6"	17' 6"	17' 6"	15'6"	17' 6"	17'10"
Transport Height	10' 9"	11' 10"	13' 3"	14' 7"	13' 4"	14' 7"	13'6"	15' 11"	13'6"
Gang Shafts	8	8	8	12	8	12	12	12	12
Gang Standards Front/Rear	8/10	10/10	12/10	12/12	12/12	14/14	16/14	16/16	16/16
Disc Blades Front / Rear	30/32	34/36	38/40	42/44	44/46	48/50	48/50	52/54	56/58

1436 SERIES 9-1/2" Blade Spacing
THREE SECTION FLEXIBLE TANDEM DISCS

Model Number	1436-21	1436-24	1436-27	1436-29	1436-31	1436-33	1436-33SW	1436-36	1436-38SW
Transport Width	13' 6"	13' 6"	13' 6"	13' 6"	17' 6"	17' 6"	15'6"	17' 6"	17'10"
Transport Height	10' 6"	11' 10"	13' 3"	14' 7"	13' 4"	14' 7"	13'6"	15' 11"	13'6"
Gang Shafts	8	8	8	12	8	10	12	12	12
Gang Standards Front / Rear	8/10	10/10	10/10	12/12	12/10	14/12	12/14	14/12	14/12
Disc Blades Front / Rear	28/30	32/34	34/36	38/40	40/42	44/46	44/46	48/50	50/52

1436 SERIES THREE SECTION FLEXIBLE DISCS

These prices reflect the standard configuration. If items other than those listed in the standard configuration are ordered, then the quoted price below will change.

For Quotation Purposes Only – Please Order Items from the Groups on the Next Pages

MODEL NUMBER	FRAME SIZE	CUTTING WIDTH	BLADE DIAMETER	EST. WEIGHT 8.75" SPACING	8.75" SPACING (4 GA BLADES)	9.50" SPACING (4 GA BLADES)	8.75" SPACING (6 GA BLADES)
SMOOTH BORON BLADES – Weights & Cutting Widths reflect 8-3/4" Blade Spacing							
SF1436-21	6-9-6	19’ 11’’	24"	14607	47,467.00	47,335.00	46,997.00
SF1436-24	7 ½-9-7 ½	22’ 8"	24"	16005	53,021.00	52,867.00	52,457.00
SF1436-27	9-9-9	25’ 5”	24"	17858	58,832.00	57,535.00	58,201.00
SF1436-29	10-9-10	28’ 2”	24"	19040	63,478.00	62,679.00	62,707.00
SF1436-31	9-13-9	29’ 5”	24"	20091	68,658.00	67,029.00	67,653.00
SF1436-33	10-13-10	34’ 11”	24"	21443	69,417.00	68,096.00	68,702.00
SF1436-36	11 ½-13-11 ½	32’ 2”	24"	22740	78,692.00	75,823.00	77,376.00
SF1436-33SW	5-7 ½-10-7 ½-5	32’ 10”	24"	22740	84,974.00	81,177.00	83,015.00
SF1436-38SW	6-7 ½-13-7 ½-6	38’ 2”	24"	22740	89,896.00	86,954.00	88,105.00
ROLLABLE BORON, SMOOTH BLADES – (Weights and Cutting Widths reflect 8-3/4" Blade Spacing)							
SF1436-21	6-9-6	19’ 11’’	24"	14607	47,909.00	47,730.00	N/A
SF1436-24	7-9-7	22’ 8"	24"	16005	53,502.00	53,324.00	N/A
SF1436-27	8 ½-9-8 ½	25’ 5”	24"	17858	59,461.00	58,200.00	N/A
SF1436-29	10-9-10	28’ 2”	24"	19040	64,042.00	63,238.00	N/A
SF1436-31	8 ½-13-8 ½	29’ 5”	24"	20091	69,042.00	67,585.00	N/A
SF1436-33	10-13-10	32’ 2”	24"	21443	70,140.00	68,681.00	N/A
SF1436-36	11 ½-13-11 ½	34’ 11”	24"	22740	79,091.00	77,324.00	N/A
SF1436-33SW	5-7½-10-7½-5	32’ 10”	24"	21443	85,208.00	81,581.00	N/A
SF1436-38SW	6-7 ½-13-7 ½-6	38’ 2”	24"	22740	90,509.00	87,156.00	N/A

Rollable Boron Blades are not recommended in rocky conditions

DUE TO THE AGGRESSIVE 20°GANG ANGLE OF THE 1436,
4 GAUGE BLADES ARE STRONGLY RECOMMENDED IN MOST FIELD CONDITIONS.

1436 SERIES THREE SECTION FLEXIBLE DISCS

ORDER CODE	DESCRIPTION	APPROX. WEIGHT (LBS)	LIST PRICE

Select One Order Code from Each Group, 01 through 05.

Group 01 Base Machine

SF1436-21	14362100, 21' Three Section Flexible Tandem Disc	7384	25,572.00
SF1436-24	14362400, 24' Three Section Flexible Tandem Disc	7846	28,207.00
SF1436-27	14362700, 27' Three Section Flexible Tandem Disc	8778	30,178.00
SF1436-29	14362900, 29' Three Section Flexible Tandem Disc	9199	33,854.00
SF1436-31	14363100, 31' Three Section Flexible Tandem Disc	8660	36,274.00
SF1436-33	14363300, 33' Three Section Flexible Tandem Disc	9070	36,028.00
SF1436-33SW	14363301, 33' Split Wing Three Section Flexible Tandem Disc	9070	45,364.00
SF1436-36	14363600, 36' Three Section Flexible Tandem Disc	9548	40,036.00
SF1436-38SW	14363800, 38' Split Wing Three Section Flexible Tandem Disc	9548	49,525.00

Group 02 Gangs Smooth Blades with Rigid Scrapers

SF1436-21

12301677S	24" 4 Gauge, C-Flex, 8.75"	6291	17,719.00
12301689S	24" 6 Gauge, C-Flex, 8.75"	5887	17,249.00
12301693S	24" 4 Gauge, C-Flex, 9.50"	6469	17,587.00
12301685S	24" 4 Gauge, C-Flex, 8.75" with Rollable Boron Blades	6291	18,161.00
12301697S	24" 4 Gauge, C-Flex, 9.50" with Rollable Boron Blades	6469	17,982.00

SF1436-24

12301678S	24" 4 Gauge, C-Flex, 8.75"	7068	19,740.00
12301690S	24" 6 Gauge, C-Flex, 8.75"	6605	19,176.00
12301694S	24" 4 Gauge, C-Flex, 9.50"	7332	19,586.00
12301686S	24" 4 Gauge, C-Flex, 8.75" with Rollable Boron Blades	7068	20,221.00
12301698S	24" 4 Gauge, C-Flex, 9.50" with Rollable Boron Blades	7332	20,043.00

SF1436-27

12301679S	24" 4 Gauge, C-Flex, 8.75"	7838	23,028.00
12301691S	24" 6 Gauge, C-Flex, 8.75"	7316	22,397.00
12301695S	24" 4 Gauge, C-Flex, 9.50"	7727	21,731.00
12301687S	24" 4 Gauge, C-Flex, 8.75" with Rollable Boron Blades	7838	23,657.00
12301699S	24" 4 Gauge, C-Flex, 9.50" with Rollable Boron Blades	7727	22,396.00

SF1436-29

12301680S	24" 4 Gauge, C-Flex, 8.75"	8600	23,998.00
12301692S	24" 6 Gauge, C-Flex, 8.75"	8015	23,227.00
12301696S	24" 4 Gauge, C-Flex, 9.50"	8676	23,199.00
12301688S	24" 4 Gauge, C-Flex, 8.75" with Rollable Boron Blades	8600	24,562.00
12301700S	24" 4 Gauge, C-Flex, 9.50" with Rollable Boron Blades	8676	23,758.00

SF1436-31

12301671S	24" 4 Gauge, C-Flex, 8.75"	8909	23,993.00
12301673S	24" 6 Gauge, C-Flex, 8.75"	8271	22,988.00
12301672S	24" 4 Gauge, C-Flex, 9.50"	8912	22,364.00
12301674S	24" 4 Gauge, C-Flex, 8.75" with Rollable Boron Blades	8909	24,377.00
12301675S	24" 4 Gauge, C-Flex, 9.50" with Rollable Boron Blades	8912	22,920.00

1436 SERIES THREE SECTION FLEXIBLE DISCS

ORDER CODE	DESCRIPTION	APPROX. WEIGHT (LBS)	LIST PRICE

Select One Order Code from Each Group, 01 through 05.

Group 02 Gangs Smooth Blades with Rigid Scrapers - Continued

SF1436-33

12301665S	24" 4 Gauge, C-Flex, 8.75"	9839	24,998.00
12301667S	24" 6 Gauge, C-Flex, 8.75"	9141	24,283.00
12301666S	24" 4 Gauge, C-Flex, 9.50"	9886	23,677.00
12301668S	24" 4 Gauge, C-Flex, 8.75" with Rollable Boron Blades	9839	25,721.00
12301669S	24" 4 Gauge, C-Flex, 9.50" with Rollable Boron Blades	9884	24,262.00

SF1436-33SW

12301701S	24" 4 Gauge, C-Flex, 8.75"	9839	31,219.00
12301703S	24" 6 Gauge, C-Flex, 8.75"	9141	29,260.00
12301704S	24" 4 Gauge, C-Flex, 9.50"	9886	27,422.00
12301702S	24" 4 Gauge, C-Flex, 8.75" with Rollable Boron Blades	9839	31,453.00
12301705S	24" 4 Gauge, C-Flex, 9.50" with Rollable Boron Blades	9884	27,826.00

SF1436-36

12301659S	24" 4 Gauge, C-Flex, 8.75"	10762	30,265.00
12301661S	24" 6 Gauge, C-Flex, 8.75"	10004	28,949.00
12301660S	24" 4 Gauge, C-Flex, 9.50"	10534	27,396.00
12301662S	24" 4 Gauge, C-Flex, 8.75" with Rollable Boron Blades	10762	30,664.00
12301663S	24" 4 Gauge, C-Flex, 9.50" with Rollable Boron Blades	10534	28,897.00

SF1436-38SW

12301706S	24" 4 Gauge, C-Flex, 8.75"	10762	31,980.00
12301708S	24" 6 Gauge, C-Flex, 8.75"	10004	30,189.00
12301709S	24" 4 Gauge, C-Flex, 9.50"	10534	29,038.00
12301707S	24" 4 Gauge, C-Flex, 8.75" with Rollable Boron Blades	10762	32,593.00
12301710S	24" 4 Gauge, C-Flex, 9.50" with Rollable Boron Blades	10534	29,240.00

Group 03 Tires

MODEL	ORDER QUANTITY	CENTERS	ORDER QUANTITY	WINGS
SF1436-21 SF1436-24	4	5552YS	4	5552YS
SF1436-27 SF1436-29	4	5555YS	4	5555YS
SF1436-31 SF1436-33 SF1436-36 SF1436-33SW SF1436-38SW	4	5555YS	4	16949S

All Wheels are 15” x 10”; All Tires are Tubeless

For 21-24 (Order 6 for 21' and 8 for 24')

5552YS	(1) New 11L x 15 (GY - FI) Load Range F Tubeless Tire 8 Bolt Wheel (15" x 10")	510	449.00

For 27-29 (Order 8)

5555YS	(1) New 12.5L, GY - FI, Load Range F Tire, 8 Bolt Wheel, (2-1/4" Spindle)	680	518.00

For 31-38 (Order 4 of 5555YS and 4 of 16949YS)

16949YS	New 380/55R-16.5 Tubeless Tire, 8 Bolt Wheel	110	839.00

1436 SERIES THREE SECTION FLEXIBLE DISCS

ORDER CODE	DESCRIPTION	APPROX. WEIGHT (LBS)	LIST PRICE
	Select One Order Code from Each Group, 01 through 05.		
Group 04 Levelers			
21' through 29' Discs			
2500190RS	Standard Self Leveler Assembly		984.00
2500193RS	Hydraulic Self Leveler Assembly		1,482.00
33' Split-Wing			
2500199RS	Standard Self Leveler Assembly		984.00
2500198RS	Hydraulic Self Leveler Assembly		1,482.00
31' through 36' Discs and 38' Split-Wing			
2500191RS	Standard Self Leveler Assembly	247	1,617.00
2500192RS	Hydraulic Self Leveler Assembly	290	2,963.00
Group 05 Hitches			
7921GS	Cast Single Lip Hitch, 1 7/8" hole Category III		160.00
7924GS	Hitch Clevis, 4" double 1 9/16" Hole		160.00
6933GS	Cast Single Lip Hitch, 2" Hole Category IV		160.00
7960GS	Hitch Clevis, 4" Double 1 7/8" Hole		160.00
16785GS	Cast Single Lip Hitch, 2 ¾" Hole Category V		240.00

DUAL SCRAPER OPTION FOR 1436 DISC HARROWS

Order Both Catalog Numbers for Full Front and Rear Sets

For 21'			
19094BS	Front Dual Scraper, 8 3/4" Spacing		319.00
19095BS	Rear Dual Scraper, 8 3/4" Spacing		382.00
19102BS	Front Dual Scraper, 9 1/2" Spacing		319.00
19103BS	Rear Dual Scraper, 9 1/2" Spacing		382.00
For 24'			
19096BS	Front Dual Scraper, 8 3/4" Spacing		382.00
19097BS	Rear Dual Scraper, 8 3/4" Spacing		382.00
19104BS	Front Dual Scraper, 9 1/2" Spacing		382.00
19105BS	Rear Dual Scraper, 9 1/2" Spacing		382.00
For 27'			
19098BS	Front Dual Scraper, 8 3/4" Spacing		445.00
19099BS	Rear Dual Scraper, 8 3/4" Spacing		382.00
19106BS	Front Dual Scraper, 9 1/2" Spacing		382.00
19107BS	Rear Dual Scraper, 9 1/2" Spacing		382.00
For 29'			
19100BS	Front Dual Scraper, 8 3/4" Spacing		445.00
19101BS	Rear Dual Scraper, 8 3/4" Spacing		445.00
19108BS	Front Dual Scraper, 9 1/2" Spacing		445.00
19109BS	Rear Dual Scraper, 9 1/2" Spacing		445.00
For 31'			
19075BS	Front Dual Scraper, 8 3/4" Spacing		445.00
19076BS	Rear Dual Scraper, 8 3/4" Spacing		445.00
19081BS	Front Dual Scraper, 9 1/2" Spacing		445.00
19082BS	Rear Dual Scraper, 9 1/2" Spacing		382.00
For 33'			
19073BS	Front Dual Scraper, 8 3/4" Spacing		511.00
19074BS	Rear Dual Scraper, 8 3/4" Spacing		511.00
19079BS	Front Dual Scraper, 9 1/2" Spacing		511.00
19080BS	Rear Dual Scraper, 9 1/2" Spacing		445.00

1436 SERIES THREE SECTION FLEXIBLE DISCS

ORDER CODE	DESCRIPTION	APPROX. WEIGHT (LBS)	LIST PRICE
For 33'SW			
19273BS	Front Dual Scraper, 8 3/4" Spacing		581.00
19274BS	Rear Dual Scraper, 8 3/4" Spacing		530.00
19276BS	Front Dual Scraper, 9 1/2" Spacing		480.00
19277BS	Rear Dual Scraper, 9 1/2" Spacing		530.00
For 36'			
19071BS	Front Dual Scraper, 8 3/4" Spacing		580.00
19072BS	Rear Dual Scraper, 8 3/4" Spacing		580.00
19077BS	Front Dual Scraper, 9 1/2" Spacing		511.00
19078BS	Rear Dual Scraper, 9 1/2" Spacing		432.00
For 38'SW			
19256BS	Front Dual Scraper, 8 3/4" Spacing		581.00
19257BS	Rear Dual Scraper, 8 3/4" Spacing		581.00
19258BS	Front Dual Scraper, 9 1/2" Spacing		530.00
19259BS	Rear Dual Scraper, 9 1/2" Spacing		480.00

THREE ROW SPIKE DRAG FINISHING HARROWS FOR 1436 DISCS

All Required Hardware and Mounting Brackets

Three Rows of 3/4" x 11" Square Spikes on 9" Centers, 3" Spacing Overall

MODEL	LEFT WING	CENTER	RIGHT WING
SF1436-21	6 ½'	8 3/4'	6 ½'
SF1436-24	8'	8'	8'
SF1436-27	8 3/4'	8 3/4'	8 3/4'
SF1436-29	10 1/4'	8'	10 1/4'
SF1433-31	8'	8 3/4'	8'
SF1436-33	9 ½'	8 3/4'	9 ½'
SF1436-36	8 3/4'	8 3/4'	8 3/4'
SF1436-33SW	6 ½'	8 3/4'	6 ½'
SF1436-38SW	6 ½'	8 3/4'	6 ½'

17001842RS	SF1436-21	1015	5,176.00
17001844RS	SF1436-24	1110	5,280.00
17001846RS	SF1436-27	1200	5,408.00
17001848RS	SF1436-29	1445	5,714.00
17001820RS	SF1436-31	1520	6,133.00
17001818RS	SF1436-33	1615	6,398.00
17001816RS	SF1436-36	1870	8,583.00
17001853RS	SF1435-33 Split Wing	2271	6,398.00
17001851RS	SF1436-38 Split Wing	2456	8,583.00

1436 SERIES THREE SECTION FLEXIBLE DISCS

ORDER CODE	DESCRIPTION	APPROX. WEIGHT (LBS)	LIST PRICE

3 ROW COIL TINE FINISHING HARROWS - HEAVY DUTY

Spring Loaded Drag Arms with all Required Hardware and Mounting Brackets
Three Rows of 1/2" x 22" Coil Tines on 12" Centers, 4" Spacing Overall, with Angle Adjustment and Backup Protection
13" Spacing Between Rows

MODEL	LEFT WING	CENTER	RIGHT WING
SF1436-21	6'	10'	6'
SF1436-24	8'	8'	8'
SF1436-27	10'	8'	10'
SF1436-29	10'	10'	10'
SF1436-31	10'	6' 6'	10'
SF1436-33	10'	6' 8'	10'
SF1436-36	10'	8' 8'	10'
SF1436-33SW	6' 6"	6 '8"	6' 6"
SF1436-38SW	6 '8'	6" 6	6' 8"

17001843RS	SF1436-21	1305	7,343.00
17001845RS	SF1436-24	1540	7,373.00
17001847RS	SF1436-27	1705	7,782.00
17001849RS	SF1436-29	2150	7,926.00
17001819RS	SF1436-31	1850	9,539.00
17001817RS	SF1436-33	2455	9,597.00
17001815RS	SF1436-36	2555	11,746.00
17001852RS	SF1436-33 Split Wing	2895	11,142.00
17001850RS	SF1436-38 Split Wing	2903	12,204.00

1436 SERIES THREE SECTION FLEXIBLE DISCS

ORDER CODE	DESCRIPTION	APPROX. WEIGHT (LBS)	LIST PRICE
Reel Finishing Attachments			
For 21'			
17001830RS	14" Flat Bar Reel Finishing Attachment	1660	7,505.00
17001831RS	14" Round Bar Reel Finishing Attachment	1775	8,023.00
17001832RS	11" Flat Bar Reel Finishing Attachment	1470	7,195.00
For 24'			
17001833RS	14" Flat Bar Reel Finishing Attachment	1910	8,572.00
17001834RS	14" Round Bar Reel Finishing Attachment	2040	9,168.00
17001835RS	11" Flat Bar Reel Finishing Attachment	1675	8,199.00
For 27'			
17001836RS	14" Flat Bar Reel Finishing Attachment	2380	9,643.00
17001837RS	14" Round Bar Reel Finishing Attachment	2525	10,314.00
17001838RS	11" Flat Bar Reel Finishing Attachment	2130	9,224.00
For 29'			
17001839RS	14" Flat Bar Reel Finishing Attachment	2475	10,358.00
17001840RS	14" Round Bar Reel Finishing Attachment	2635	11,079.00
17001841RS	11" Flat Bar Reel Finishing Attachment	2205	9,576.00
For 31'			
17001821RS	14" Flat Bar Reel Finishing Attachment	2490	10,611.00
17001822RS	14" Round Bar Reel Finishing Attachment	2650	10,871.00
17001823RS	11" Flat Bar Reel Finishing Attachment	2230	9,835.00
For 33'			
17001824RS	14" Flat Bar Reel Finishing Attachment	2655	10,871.00
17001825RS	14" Round Bar Reel Finishing Attachment	2830	11,078.00
17001826RS	11" Flat Bar Reel Finishing Attachment	2395	10,094.00
For 36'			
17001827RS	14" Flat Bar Reel Finishing Attachment	2670	11,232.00
17001828RS	14" Round Bar Reel Finishing Attachment	2850	11,388.00
17001829RS	11" Flat Bar Reel Finishing Attachment	2370	10,457.00
For 33' Split-Wing			
17001782R	14" Flat Bar Reel Finishing Attachment		10,871.00
17001783R	14" Round Bar Reel Finishing Attachment		11,078.00
17001784R	11" Flat Bar Reel Finishing Attachment		10,094.00
For 38' Split-Wing			
17001771RS	14" Flat Bar Reel Finishing Attachment		11,232.00
17001772RS	14" Round Bar Reel Finishing Attachment		11,388.00
17001773RS	11" Flat Bar Reel Finishing Attachment		10,457.00
Miscellaneous			
19068RS	Hitch, Rear Tow Assembly for 21'-29' and 33' Split-Wing	350	1,039.00
19069RS	Hitch, Rear Tow Assembly for 31'-36' and 38' Split-Wing	350	1,039.00
2500195RS	Lights/Hydraulic Tow Package	40	328.00
18663BS	Gang Wrench, 2 3/4" Spacing	35	89.00

Mississippi State Contract Discount: 5%

1444 and 1544 SERIES FOUR SECTION FLEXIBLE TANDEM DISCS

F.O.B. Beloit, KS

STANDARD CONFIGURATION

6 11L x 15, 12 Ply Tubeless Tires with Six Bolt Wheels and 2” Slip in Spindles on Center Sections of 30’ and 33’
4 11L x 15, 8 Ply Tubeless Tires with Six Bolt Wheels and 2” Slip in Spindles on Wings of 30’ and 33’
6 12.5L x 15 (GY - FI) Load F, Tires with Eight Bolt Wheels and 2-1/4” Slip in Spindles on Center Sections of 36’ and 40’
4 12.5L x 15, 12 Ply Tubeless Tires with Eight Bolt Wheels and 2-1/4” Slip in Spindles on wings of 36’ and 40’
12 12.5L x 15 (GY - FI) Load F, Tires with Eight Bolt Wheels and 2-1/4” Slip in Spindles on 42’ and 45’
6 Walking Tandems in all Locations on the 1544
4 Walking Tandems on the 1444
2 Front Mounted Single Point Depth Control with Rephasing Lift System
1 Cast Single Lip Hitch with 2" Oblong Hole (4781RS)
2 Heavy-duty Gauge Wheels with 8.00 x 10 New Tires and Tubes, Five Bolt Hubs and Triple Lip Seals
Hi-strength 1-3/4" Round Stress Proof Gang Shafts
Triple Sealed Greaseable Trunnion Bearings
C-Flex Bearing Standards
4" wide Rigid Scraper Assemblies Mounted to C-Flex
2 Tongue Jacks
Safety Equipment Including: Light Kit, SMV Emblem, and Safety Chain
Standard Mechanical Self-leveling System on 1444
Standard Mechanical Self-leveling System on 1544

1444 AND 1544 SERIES
FOUR SECTION FLEXIBLE TANDEM DISCS

DISC MODEL	SF1444-30	SF1444-33	SF1444-36	SF1444-40	SF1544-42	SF1544-45
TRANSPORT WIDTH	18’ 2”	18’,2”	19’ 9”	19’ 9”	22’ 2"	22’ 2"
TRANSPORT HEIGHT	12’ 1”	13’ 2”	13’ 8”	15’ 4”	14’ 7"	15’ 8"
FRAME SIZE	8-7-7-8	10-7-7-10	10-8-8-10	12-8-8-12	12-9-9-12	13½-9-9-13½
STANDARD GANGS Front / Rear	12/12	12/12	16/14	20/14	18/20	20/20
8½” x 8½” NUMBER OF DISC BLADES Front / Rear	42/44	44/48	48/52	54/58	8¾” 60/62	8¾” 64/66

1444 and 1544 SERIES FOUR SECTION FLEXIBLE TANDEM DISCS

These prices reflect the standard configuration. If items other than those listed in the standard configuration are ordered, then the quoted price below will change.

For Quotation Purposes Only – Please Order Items from the Groups on the Next Pages

MODEL NUMBER	CUTTING WIDTH	BLADE DIAMETER	EST. WEIGHT	¼" THICK (4 GA) ROLLABLE BORON BLADES	¼" THICK (4 GA) BLADES	6 GAUGE BLADES
SMOOTH BLADES – 8½" BLADE SPACING						
SF1444-30	30' 6"	22"	17454		66,355.00	N/A
SF1444-30	30' 6"	24"	17916	69,086.00	67,577.00	66,208.00
SF1444-30	30' 6"	26"	18362		71,135.00	N/A
SF1444-33	33' 4"	22"	18467		73,718.00	N/A
SF1444-33	33' 4"	24"	18984	76,618.00	75,004.00	73,527.00
SF1444-33	33' 4"	26"	19461		78,981.00	N/A
SF1444-36	36'	22"	21632		84,199.00	N/A
SF1444-36	36'	24"	22193	87,430.00	85,675.00	83,980.00
SF1444-36	36'	26"	22712		89,842.00	N/A
SF1444-40	40'	22"	23510		91,871.00	N/A
SF1444-40	40'	24"	24137	95,373.00	93,407.00	91,653.00
SF1444-40	40'	26"	24718		98,212.00	N/A
SMOOTH BLADES – 8-3/4" BLADE SPACING						
SF1544-42	42' 7"	22"	26590		110,303.00	N/A
SF1544-42	42' 7"	24.51"/24.38"	27200	114,170.00	112,027.00	109,943.00
SF1544-45	45' 4"	22"	28325		112,067.00	N/A
SF1544-45	45' 4"	24.51"/24.38"	28975	116,236.00	113,953.00	111,712.00

**** Estimated weight is based on ¼" thick blades.***

1444 and 1544 SERIES FOUR SECTION FLEXIBLE TANDEM DISCS

ORDER CODE	DESCRIPTION	APPROX. WEIGHT (LBS)	LIST PRICE

Select One Order Code from Each Group, 01 through 04.

Group 01 Base Machine

SF1444-30	14443000, 30' Four Section Flexible Tandem Disc	10317	43,388.00
SF1444-33	14443300, 33' Four Section Flexible Tandem Disc	10685	47,856.00
SF1444-36	14443600, 36' Four Section Flexible Tandem Disc	12958	56,110.00
SF1444-40	14444000, 40' Four Section Flexible Tandem Disc	14002	61,297.00
SF1544-42	15444200, 42' Four Section Flexible Tandem Disc	15061	76,456.00
SF1544-45	15444500, 45' Four Section Flexible Tandem Disc	16049	76,950.00

Group 02 Gangs SMOOTH BLADES

SF1444-30

12301488S	22" 4 Gauge, C-Flex	6338	18,349.00
12301490S	24" 6 Gauge, C-Flex	6800	18,202.00
12301492S	24" 4 Gauge, C-Flex	6800	19,571.00
12301503S	26" 4 Gauge, C-Flex	7246	23,129.00
12301641S	24" 4 Gauge, C-Flex Rollable Boron	6800	21,080.00

SF1444-33

12301489S	22" 4 Gauge, C-Flex	6983	21,244.00
12301491S	24" 6 Gauge, C-Flex	7500	21,053.00
12301493S	24" 4 Gauge, C-Flex	7500	22,530.00
12301504S	26" 4 Gauge, C-Flex	7977	26,507.00
12301642S	24" 4 Gauge, C-Flex Rollable Boron	7500	24,144.00

SF1444-36

12301499S	22" 4 Gauge, C-Flex	7639	22,443.00
12301498S	24" 6 Gauge, C-Flex	8200	22,224.00
12301497S	24" 4 Gauge, C-Flex	8200	23,919.00
12301505S	26" 4 Gauge, C-Flex	8719	28,086.00
12301643S	24" 4 Gauge, C-Flex Rollable Boron	8200	25,674.00

SF1444-40

12301502S	22" 4 Gauge, C-Flex	8473	24,928.00
12301501S	24" 6 Gauge, C-Flex	9100	24,710.00
12301500S	24" 4 Gauge, C-Flex	9100	26,464.00
12301506S	26" 4 Gauge, C-Flex	9681	31,269.00
12301644S	24" 4 Gauge, C-Flex Rollable Boron	9100	28,430.00

SF1544-42

12301135S	22" 4 Gauge, C-Flex	11407	32,605.00
12301129S	24.38" 6 Gauge, C-Flex	12017	32,245.00
12301532S	24" 4 Gauge, C-Flex	12365	34,329.00
12301645S	24" 4 Gauge, C-Flex Rollable Boron	12365	36,472.00

SF1544-45

12301126S	22" 4 Gauge, C-Flex	12154	33,875.00
12301120S	24.38" 6 Gauge, C-Flex	12804	33,520.00
12301533S	24" 4 Gauge, C-Flex	13121	35,761.00
12301646S	24" 4 Gauge, C-Flex Rollable Boron	13121	38,044.00

1444 and 1544 SERIES FOUR SECTION FLEXIBLE TANDEM DISCS

ORDER CODE	DESCRIPTION	APPROX. WEIGHT (LBS)	LIST PRICE

Select One Order Code from Each Group, 01 through 04.

Group 03 Tires

MODEL	ORDER QUANTITY	CENTER	ORDER QUANTITY	WINGS
SF1444-30	6	3587YS	4	3058YS or 3587YS
SF1444-33	6	3587YS	4	3058YS or 3587YS
SF1444-36	6	5555YS	4	10323YS or 5555YS
SF1444-40	6	5555YS	4	10323YS or 5555YS
SF1544-42	In Base on SF1544-42 & 1544-45 = Qty 12, 12.5L x 15, GY - FI, Load Range F Tires With 15” x 10” – 8 Bolt Wheels			
SF1544-45				

3058YS	(1) New 8 Ply, 11L Tubeless Tire, 6 Bolt Wheel (15" x 10") . .	65	319.00
3587YS	(1) New 12 Ply, 11L Tubeless Tire, 6 Bolt Wheel (15" x 10") .	74	350.00
10323YS	(1) New 12 Ply, 12.5L Tire, 8 Bolt Wheel (15" x 10")	85	324.00
5555YS	(1) New 12.5L x 15, GY - FI, Load Range F Tire . . . . . 8 Bolt Wheel (15" x 10")	100	518.00

Group 04 Levelers

30’ through 40’ Discs

2500134RS	Self-Leveling Hitch with Manual Screw Adjustment	95	1,242.00
2500135RS	Hydraulic Self-Leveling System with Level Indicator	155	3,144.00

42’ and 45’ Discs

2500087RS	Self-Leveling Hitch with Manual Screw Adjustment	122	1,242.00
2500088RS	Hydraulic Self-Leveling System with Level Indicator	309	3,099.00

OPTIONAL EQUIPMENT - For Current Machines ONLY

Rear Tow Hitch for SF1544

6945BS	Rear Tow Hitch with Hitch Slide and Ball Joint	55	387.00
6946BS	Rear Tow Hitch with Ball Joint	34	189.00
18663BS	Gang Wrench, 2-3/4"	20	89.00
12634PLS	Wiring Harness to Plug Soil Conditioner Lights into . . . . . Implement Lights		223.00

1444 and 1544 SERIES FOUR SECTION FLEXIBLE TANDEM DISCS

ORDER CODE	DESCRIPTION	APPROX. WEIGHT (LBS)	LIST PRICE

THREE ROW COIL TINE FINISHING HARROWS FOR 1444 & 1544 SERIES DISCS

Spring Loaded Drag Arms with all Required Hardware and Mounting Brackets
Three Rows of 3/8" x 16" Coil Tines on 7½" Centers, 2½" Spacing Overall, with Angle Adjustment and Backup Protection
15" Spacing Between Rows

MODEL	LEFT WING	CENTER	RIGHT WING
SF1444-30	97 ½"	82 ½" 82 ½"	97 ½"
SF1444-33	52 ½" 52 ½"	82 ½" 82 ½"	52 ½" 52 ½"
SF1444-36	52 ½" 52 ½"	97 ½" 97 ½"	52 ½" 52 ½"
SF1444-40	67 ½" 67 ½"	97 ½" 97 ½"	67 ½" 67 ½"
SF1544-42	52 ½" 82 ½"	52 ½" 52 ½" 52 ½" 52 ½"	82 ½" 52 ½"
SF1544-45	67 ½" 82 ½"	52 ½" 52 ½" 52 ½" 52 ½"	82 ½" 67 ½"

17001522RS	SF1444-30	1452	6,631.00
17001523RS	SF1444-33	1737	6,786.00
17001524RS	SF1444-36	1592	6,908.00
17001525RS	SF1444-40	1854	8,060.00
17001357RS	SF1544-42	2181	9,435.00
17001358RS	SF1544-45	2252	9,590.00

Note: 1443 Attachments Will Not Adapt To Model 1444.

3 ROW COIL TINE FINISHING HARROWS - HEAVY DUTY

Spring Loaded Drag Arms with all Required Hardware and Mounting Brackets
Three Rows of 1/2" x 22" Coil Tines on 12" Centers, 4" Spacing Overall, with Angle Adjustment and Backup Protection
13" Spacing Between Rows

17001763RS	SF1444-30		10,308.00
17001764RS	SF1444-33		10,699.00
17001765RS	SF1444-36		11,589.00
17001766RS	SF1444-40		12,927.00
17001762RS	SF1544-42		14,263.00
17001755RS	SF1544-45	3150	14,375.00

THREE ROW SPIKE DRAG FOR 1544 SERIES DISCS

All Required Hardware and Mounting Brackets
Three Rows of 3/4" x 11" Square Spikes on 9" Centers, 3" Spacing Overall

MODEL	LEFT WING	CENTER	RIGHT WING
SF1544-42	5' 6 ½'	9 ½' 9 ½'	6 ½' 5'
SF1544-45	6 ½' 6 ½'	9 ½' 9 ½'	6 ½' 6 ½'

17001047RS	SF1544-42	2377	8,655.00
17001048RS	SF1544-45	2455	8,830.00

1550 FIVE SECTION FLEXIBLE DISCS

F.O.B. Beloit, KS

STANDARD CONFIGURATION

8.75” Disc Blade Spacing with 18° Front and Rear Gang Angles
6 380/55 x 16.5 Tubeless Tire, Load Range F with 15” x 10” Eight Bolt Wheels and 2-3/4” Slip in Spindles (Centers)
8 12.5L x 15 12 Ply Tubeless Tires with 15” x 10” Six Bolt Wheels and 2” Slip in Spindles (Wings)
High Strength 1-3/4” Round Stress Proof Gang Shafts
Triple Sealed, Greaseable, Trunnion Style Gang Bearings
C-Flex Bearing Standards (1-1/4” x 2-1/2”)
4" wide Rigid Scraper Assemblies Mounted to C-Flex Standards
Maintenance Free Lift System with 5-1/2” Lift Axle on Center Section
1 CAT 5 Hitch 2” or 2-3/4” Pin
Rephasing Lift System with Single Point Depth Control
Twin Leveler System with Adjusting Hydraulic Cylinders
2 Walking Triples with Greaseable Tapered Roller Bearings (Center)
4 Walking Tandems with Greaseable Tapered Roller Bearings (Wings)
4 Heavy-duty Gauge Wheels with 20.5 x 8 -10 New Tires and Tubes, Five Bolt Hub and Triple Lip Seal
1 Adjustment Wrench
1 Tongue Jack
Safety Equipment Including: Light Kit, SMV Emblem and Safety Tow Chain

MODEL NUMBER	TRANSPORT WIDTH	TRANSPORT HEIGHT	GANG SHAFTS	GANG STANDARDS FRONT / REAR	DISC BLADES FRONT / REAR	FRAME SIZE
1550-47	18' 2"	13' 11"	12	20/20	66/68	7'-10'-13'-10'-7'
1550-50	18' 2"	13' 11"	12	20/20	70/72	8.5'-10'-13'-10'-8.5'

These prices reflect the standard configuration. If items other than those listed in the standard configuration are ordered, then the quoted price below will change.

For Quotation Purposes Only – Please Order Items from the Groups on the Next Pages

MODEL NUMBER	CUTTING WIDTH	BLADE DIAMETER	EST. WEIGHT	¼” THICK (4 GA) BORON BLADES	¼” THICK (4 GA) ROLLABLE BORON BLADES	6 GAUGE BLADES
SMOOTH BLADES – 8-3/4” BLADE SPACING						
SF1550-47	47"	24"	31302	119,023.00	120,329.00	117,886.00
SF1550-50	50”	24"	33300	123,563.00	125,268.00	122,427.00

1550 FIVE SECTION FLEXIBLE DISCS

ORDER CODE	DESCRIPTION	APPROX. WEIGHT (LBS)	LIST PRICE

Select One Order Code from Each Group, 01 through 05.

Group 01 Base Machine

15504700	47' with 24 x 1/4 inch Blades and Standard Configuration . . .		59,421.00
15505000	50' with 24 x 1/4 inch Blades and Standard Configuration . . .		59,815.00

Group 02 Gangs Smooth Blades, 8-3/4" Blade Spacing

SF1550-47

12301635S	24" 6 Gauge, C-Flex		37,605.00
12301632S	24" 4 Gauge, C-Flex		38,742.00
12301633S	24" 4 Gauge, C-Flex with Rollable Boron Blades		40,048.00

SF1550-50

12301634S	24" 6 Gauge. C-Flex		41,752.00
12301630S	24" 4 Gauge, C-Flex		42,888.00
12301631S	24" 4 Gauge, C-Flex with Rollable Boron Blades		44,593.00

Group 03 Center Lifts

7500493RS	Lift Assembly, Center, 2-3/4" Spindle, Walking Tandem . . .		7,941.00

Group 04 Wing Lifts

7500494RS	Lift Assembly, Wings, 2" Spindle, Walking Tandem		4,949.00

Group 05 Tires (order Qty 8 for Wings and 6 for Center)

3588S	(1) New 12 Ply, 12.5L x 15 Tubeless Tire for Wings	80	367.00
16949YS	New 380/55R-16.5 Tubeless Tire, 8 Bolt Wheel	110	839.00

OPTIONAL EQUIPMENT

13767RS	Rear Tow Hitch with Hitch Slide and Ball Joint	199	1,008.00
2500182RS	Rear Tow Hitch Hydraulic Package	45	395.00
18663BS	Gang Wrench, 2-3/4"	35	89.00
12634PLS	Wiring Harness to Plug Soil Conditioner Lights into . . . . . Implement Lights		223.00

3 ROW COIL TINE FINISHING HARROWS - HEAVY DUTY

Spring Loaded Drag Arms with all Required Hardware and Mounting Brackets
Three Rows of 1/2" x 22" Coil Tines on 12" Centers, 4" Spacing Overall, with Angle Adjustment and Backup Protection
13" Spacing Between Rows

MODEL	OUTER LEFT WING	INNER LEFT WING	CENTER	INNER RIGHT WING	OUTER RIGHT WING
SF1550-47	8'	10'	6' & 6'	10'	8'
SF1550-50	8'	10'	6' & 8'	10'	8'

17001754RS	SF1550-47	3177	14,289.00
17001753RS	SF1550-50	3236	14,515.00

1710 and 1730 SERIES OFFSET DISCS

F.O.B. Wishek, ND

STANDARD CONFIGURATION

1710
2 11L x 15 Tires with 6 Bolt Hubs (1710-10)
4 12.5L x 15 Tires with 8 Bolt Hubs
2 Depth Collar Kit
2 Lift Cylinders 4" x 12"
1 Cast Single Lip Hitch for 2-1/4" Diameter Pin
2 Adjustment Wrenches
1 Tongue Jack
214 Series Re-lube Gang Bearings
High Strength 1-15/16" Gang Shafts
Disc Gang Angle Adjustment
Solid Mount Single Scrapers
Level Lift Hitch
Warning Light Kit, Complete with Wiring, SMV Emblem and Safety Chain

1730
4 12.5L x 15 Tires with 8 Bolt Hubs
4 Depth Collar Kit
2 Main Lift Cylinders 4.5" x 12"
2 Wing Lift Cylinders 4" x 12"
2 Wing Fold Cylinders 5" x 24" with Over Center Wing Lock
1 Cast Single Lip Hitch for 2-1/4" Diameter Pin
2 Adjustment Wrenches
1 Tongue Jack
214 Series Re-lube Gang Bearings
High Strength 1-15/16" Gang Shafts
Disc Gang Angle Adjustment
Solid Mount Single Scrapers
Level Lift Hitch
Warning Light Kit, Complete with Wiring, SMV Emblem and Safety Chain

1700 SERIES RIGID 11" BLADE SPACING					
Model Number	**SF1710-10**	**SF1710-12**	**SF1710-14**	**SF1710-16**	**SF1710-18**
Cutting Width	11' 0"	12' 8"	14' 6"	16' 2"	17' 11"
Transport Width	12' 7"	14' 4"	15' 3"	17' 10"	19' 7"
Transport Height	7' 0"	7' 0"	7' 0"	7' 0"	7' 0"
Number of Blades F®	12 / 13	14 / 15	16 / 17	18 / 19	20 / 21

1700 SERIES FOLDING MODELS 11" BLADE SPACING			
Model Number	**SF1730-22**	**SF1730-24**	**SF1730-26**
Cutting Width	21' 5"	23' 2"	24' 11"
Transport Width	11' 9"	11' 9"	11' 9"
Transport Height	12' 10"	13' 6"	9' 6"
Number of Blades F®	24 / 25	26 / 27	28 / 29

1700 SERIES 13" BLADE SPACING				
Model Number	**SF1710-12**	**SF1710-14**	**SF1710-16**	**SF1730-18**
Cutting Width	12' 10"	14' 11"	16' 11"	18' 11"
Transport Width	14' 8"	16' 6"	18' 6"	20' 7"
Transport Height	7' 0"	7' 0"	7' 0"	14' 7"
Number of Blades F®	12 / 13	14 / 15	16 / 17	18 / 19

Mississippi State Contract Discount: 5%

1710 and 1730 SERIES OFFSET DISCS

ORDER CODE	CUTTING WIDTH	BLADE DIAMETER	APPROX. WEIGHT (LBS)	5/16" THICK BLADES PLAIN	5/16" THICK BLADES NOTCHED	NOTCHED FRONT PLAIN REAR

For Quotation Purposes Only – Please Order Items from the Groups on the Next Pages

Rigid Bearing Gangs - 11" Blade Spacing (Non-Folding Models)

SF1710-12	12' 8"	28"	10,329	37,804.00	38,268.00	38,028.00
SF1710-12	12' 8"	30"	10,329	38,761.00	39,283.00	39,013.00
SF1710-14	14' 6"	28"	10,976	40,029.00	40,557.00	40,285.00
SF1710-14	14' 6"	30"	10,976	41,118.00	41,712.00	41,406.00
SF1710-16	16' 2"	28"	11,526	41,266.00	41,858.00	41,554.00
SF1710-16	16' 2"	30"	11,526	42,487.00	43,153.00	42,811.00
SF1710-18	17' 11"	28"	12,271	43,983.00	44,639.00	44,303.00
SF1710-18	17' 11"	30"	12,271	45,336.00	46,074.00	45,696.00

Rigid Bearing Gangs - 11" Spacing (Folding Models)

SF1730-22	21' 5"	28"	20,960	70,558.00	71,342.00	70,942.00
SF1730-22	21' 5"	30"	20,960	72,175.00	73,057.00	72,607.00
SF1730-24	23' 2"	28"	22,060	75,872.00	76,720.00	76,288.00
SF1730-24	23' 2"	30"	22,060	77,621.00	78,575.00	78,089.00
SF1730-26	24' 11"	28"	22,860	77,232.00	78,144.00	77,680.00
SF1730-26	24' 11"	30"	22,860	79,113.00	80,139.00	79,617.00

Spring Cushion Gangs - 11" Blade Spacing (Non-Folding Models)

SF1710-10	11' 0"	28"	11,029	40,771.00	41,171.00	40,963.00
SF1710-10	11' 0"	30"	11,029	41,596.00	42,046.00	41,812.00
SF1710-12	12' 8"	28"	12,550	45,343.00	45,807.00	45,567.00
SF1710-12	12' 8"	30"	12,550	46,300.00	46,822.00	46,552.00
SF1710-14	14' 6"	28"	13,830	49,916.00	50,444.00	50,172.00
SF1710-14	14' 6"	30"	13,830	51,005.00	51,599.00	51,293.00
SF1710-16	16' 2"	28"	14,720	52,264.00	52,856.00	52,552.00
SF1710-16	16' 2"	30"	14,720	52,792.00	54,151.00	52,520.00
SF1710-18	17' 11"	28"	15,248	53,870.00	54,526.00	54,190.00
SF1710-18	17' 11"	30"	15,248	55,223.00	55,961.00	55,583.00

Spring Cushion Gangs - 13" Blade Spacing (Non-Folding Models)

SF1710-12	12' 10"	30"	12,862	45,343.00	45,743.00	45,535.00
SF1710-14	14' 11"	30"	13,762	49,916.00	50,380.00	50,140.00
SF1710-16	16' 11"	30"	14,594	52,264.00	52,792.00	52,520.00
SF1710-18	18' 11"	30"	15,271	53,870.00	54,462.00	54,158.00

1710 and 1730 SERIES OFFSET DISCS

ORDER CODE	DESCRIPTION	APPROX. WEIGHT (LBS)	LIST PRICE

Select One Order Code from Each Group, 01 through 03.

Group 1 Base Machine

Rigid Bearing Gangs - 11" Blade Spacing (Non-Folding Models)

245498RAW	SF1710-12 with 28" x 5/16" Blades.		36,585.00
109113RAW	SF1710-14 with 28" x 5/16" Blades.		38,810.00
245708RAW	SF1710-16 with 28" x 5/16" Blades.		40,047.00
245718RAW	SF1710-18 with 28" x 5/16" Blades.		42,764.00

Rigid Bearing Gangs - 11" Blade Spacing (Folding Models)

246993RAW	SF1730-22 with 28" x 5/16" Blades.		69,339.00
246994RAW	SF1730-24 with 28" x 5/16" Blades.		74,653.00
246995RAW	SF1730-26 with 28" x 5/16" Blades.		76,013.00

Spring Cushion Gangs - 11" Blade Spacing (Non-Folding Models)

245440RAW	SF1710-10 with 28" x 5/16" Blades.		39,552.00
244066RAW	SF1710-12 with 28" x 5/16" Blades.		44,124.00
109102RAW	SF1710-14 with 28" x 5/16" Blades.		48,697.00
244067RAW	SF1710-16 with 28" x 5/16" Blades.		51,045.00
244069RAW	SF1710-18 with 28" x 5/16" Blades.		52,651.00

Spring Cushion Gangs - 13" Blade Spacing (Non-Folding Models)

244095RAW	SF1710-12 with 30" x 5/16" Blades		44,124.00
244604RAW	SF1710-14 with 30" x 5/16" Blades		48,697.00
109103RAW	SF1710-16 with 30" x 5/16" Blades		51,045.00
244611RAW	SF1710-18 with 30" x 5/16" Blades		52,651.00

Group 02 Blades - Order one per Chart on page 42

106075AW	Blade, 28" x 5/16" Plain (in base on 11" Blade Spacing)	57.9	No Charge
107773AW	Blade, 28" x 5/16" Notched (for 11" Blade Spacing)	52.7	16.00
107774AW	Blade, 30" x 5/16" Plain (for 11" Blade Spacing)	65.8	33.00
107775AW	Blade, 30" x 5/16" Notched (for 11" Blade Spacing)	60.5	51.00
106021AW	Blade, 30" x 5/16" Plain (in base on 13" Blade Spacing)	65.8	No Charge
108044AW	Blade, 30" x 5/16" Notched (for 13" Blade Spacing)	60.5	16.00

Group 03 Hydraulic Leveler - in price of built up units on page 43 (Optional)

107440AW	Hydraulic Leveler		1,219.00

1710 and 1730 SERIES OFFSET DISCS

ORDER CODE	DESCRIPTION	APPROX. WEIGHT (LBS)	LIST PRICE

OPTIONAL EQUIPMENT

Configuration	Model	Front and Rear Bearings Right/Left	Total Number of Blades	Scrapers Bearing Standard Right/Left	Scrapers Clean Spool Right/Left Front/Rear	Scrapers Rotary Front/Rear Total	Blades Notched Front Plain Rear
Rigid Bearing Gangs 11" Spacing	SF1710-12	5/5	29	5/5	12/13	26	14/15
	SF1710-14	6/6	33	6/6	14/15	30	16/17
	SF1710-16	7/6	37	7/6	16/17	34	18/19
	SF1710-18	8/8	41	8/8	18/19	38	20/21
	SF1730-22	9/8	49	9/8	21/22	46	24/25
	SF1730-24	11/10	53	11/10	23/24	50	26/27
	SF1730-26	11/10	57	11/10	25/26	54	28/29
Spring Cushion Gangs 11" Spacing	SF1710-10	6/6	25	6/4	10/11	22	12/13
	SF1710-12	6/6	29	6/6	12/13	26	14/15
	SF1710-14	7/6	33	7/6	13/15	30	16/17
	SF1710-16	9/8	37	9/8	15/17	34	18/19
	SF1710-18	9/8	41	9/8	17/19	38	20/21
Spring Cushion Gangs 13" Spacing	SF1710-12	6	25	6/6	10/11	23	12/13
	SF1710-14	6	29	6/6	11/13	27	14/15
	SF1710-16	7	33	7/7	13/15	31	16/17
	SF1710-18	8	37	8/8	15/17	35	18/19

SCRAPER OPTIONS (in Lieu of Standard Solid Mount Single Scrapers)

Order Right and Left Hand for a Complete Set (Order 1 per Bearing Indicated for the Right and Left from Above Chart)

107444-11RAW	Scraper, RH for Bearing Standard, for 11" Blade Spacing . .	23	72.00
107444-11LAW	Scraper, LH for Bearing Standard, for 11" Blade Spacing . .	23	72.00
107444-13RAW	Scraper, RH for Bearing Standard, for 13" Blade Spacing . .	23	72.00
107444-13LAW	Scraper, LH for Bearing Standard, for 13" Blade Spacing . .	23	72.00
108571AW	Scraper, RH to Clean Spool and Blade . . . . . (Order one per Front Blade)	8	31.00
108572AW	Scraper, LH to Clean Spool and Blade . . . . . (Order one per Rear Blade)	8	31.00
108063AW	Scraper, Rotary (Order one per Blade).	9	114.00

Note: To order the Rotary Scraper options refer to page 1000-37 for the number of blades on the front and rear gangs. To order Rotary Scrapers for the front & rear gangs OR the rear gang only; reduce the blade count (order quantity) by three (3).

Bearing Options

109820AW	Bearing Guard (Order one for each Bearing)	8	43.00
104884AW	Washer, Bearing Guard (Order two for each Bearing)	.41	4.00

1710 and 1730 SERIES OFFSET DISCS

ORDER CODE	DESCRIPTION	APPROX. WEIGHT (LBS)	LIST PRICE

OPTIONAL EQUIPMENT

Miscellaneous Options

351803AW	Rear Hitch, Single Lip for 1" Dia Pin (12' to 18' models) . . .	58	258.00
351804AW	Rear Hitch, Double Lip for 1" Dia Pin (12' to 18' models) . .	80	258.00
351196AW	Rear Hitch, Single Lip for 1" Dia Pin (22' to 26' models) . . .	116	466.00
351197AW	Rear Hitch, Double Lip for 1" Dia Pin (22' to 26' models) . .	133	466.00
238778AW	Rear Hydraulic Extension Package (10' to 18')	27	478.00
247597AW	Rear Hydraulic Extension Package (22' to 26')	50	478.00
236099AW	Safety Light Extension	3	211.00

3 Row Heavy Duty Coil Tine Harrows

Spring Loaded Drag Arms with all Required Hardware and Mounting Brackets
Three rows of 5/8" x 26" Coil Tines on 12" Centers, 4" Spacing Overall, with Angle Adjustments and Backup Protection and 12" Spacing Between Rows

Model Number	Overlap Each Side	Harrow Section Size		Number of Mounting Arms
		6' 0"	8' 0"	
SF1710-14	10' 6"	N/A	2	2
SF1710-16	13' 0"	3	N/A	2
SF1710-18	15' 6"	2	1	4

245875AW	SF1710-14	1,130	4,655.00
245876AW	SF1710-16	1,356	5,615.00
245877AW	SF1710-18	1,536	6,304.00

2 Row Heavy Duty Coil Tine Harrow with Flat Bar Basket

Spring Loaded Drag Arms with all Required Hardware and Mounting Brackets
Two rows of 5/8" x 26" Coil Tines on 12" Centers, 6" Spacing Overall,
with Angle Adjustments and Backup Protection and 12" Spacing Between Rows
13" Diameter Basket with Eight 1/4" x 1-1/4" Flat Blades and Triple Lip Sealed
Flange Bearings with Lube Fitting. Basket widths; 4.5', 6' and 7.5'

Model Number	Overlap Each Side	Harrow Section Size		Number of Mounting Arms
		6' 0"	8' 0"	
SF1710-14	10' 6"	N/A	2	2
SF1710-16	13' 0"	3	N/A	2
SF1710-18	15' 6"	2	1	4

246306AW	SF1710-14	1,455	7,055.00
246307AW	SF1710-16	1,804	9,093.00
246308AW	SF1710-18	1,996	9,915.00

Mississippi State Contract Discount: 5%

1710HD SERIES OFFSET DISCS

F.O.B. Wishek, ND

STANDARD CONFIGURATION

2 385/65R 22.50 / used Tires with 10 Bolt Hubs (1710HD-10)
4 385/65R 22.50 / used Tires with 10 Bolt Hubs (1710HD-16)
2 Depth Collar Kit
2 Main Lift Cylinders 4.5” x 12”
1 Cast Single Lip Hitch for 2-1/4" Diameter Pin
2 Adjustment Wrenches
1 Tongue Jack
36" x .472" Notched Disc Blades
18" Disc Blade Spacing
Rigid Bearing Gangs
315 Series Re-lube Gang Bearings
Bearing Guards and Washers
High Strength 2-3/4" Gang Shafts
Disc Gang Angle Adjustment
Solid Mount Double Scrapers
Level Lift Hitch
Warning Light Kit, Complete with Wiring, SMV Emblem and Safety Chain

Model Number	SF1710HD-10	SF1710HD-16
Cutting Width	11' 9"	17' 6"
Transport Width	12' 9"	19' 3"
Transport Height	8' 4"	8' 4"
Number of Blade F®	8 / 8	12 / 12
Number of Bearings F®	4 / 4	6 / 6

These prices reflect the standard configuration

ORDER CODE	DESCRIPTION	FACTORY	APPROX. WEIGHT (LBS)	LIST PRICE
Group 01 Base Machine				
109132AW	SF1710HD-10 Heavy Duty Offset Disc, 11' 9" Cutting Width	.	14,956	52,035.00
245782AW	SF1710HD-16 Heavy Duty Offset Disc, 17' 6" Cutting Width	.	21,130	70,574.00
Group 02 Tires				
(1710HD-10)				
354824AW	(2) 385/65R 22.50 / Used Tires with 10 Bolt Hubs			In Base
354526AW	(2) 385/65R 22.50 / New Tires with 10 Bolt Hubs			1,230.00
(1710HD-16)				
354825AW	(4) 385/65R 22.50 / Used Tires with 10 Bolt Hubs			In Base
354527AW	(4) 385/65R 22.50 / New Tires with 10 Bolt Hubs			2,460.00

NOTE: SF1710HD-10 can be positioned on a trailer fully assembled yielding less than 12 feet wide.

1810 and 1830 SERIES TANDEM DISCS

1810 F.O.B. Wishek, ND - 1830 F.O.B. Wishek, ND and Wahpeton, ND

STANDARD CONFIGURATION

4 12.5L x 15 Tires with 8 Bolt Hubs (1810)
8 385/65R 22.50 / used Tires with 8 Bolt Hubs (1830)
4 385/65R 22.50 / used Tires with 10 Bolt Hubs (center section 1830-34 and 1830-38)
1 Single Point Depth Control (1830)
4 Depth Collar Kit 1830
2 Depth Collar Kit 1810
2 Lift Cylinders 4” x 12” (1810)
2 Main Lift Cylinders 4.5” x 12” (1830)
2 Wing Lift Cylinders 5” x 36” (1830-22 through 1830-26)
4 Wing Lift Cylinders 5” x 36” (1830-30 through 1830-38)
1 Hydraulic Leveler
2 Adjustment Wrenches
1 Tongue Jack
214 Series Re-lube Gang Bearings
High Strength 1-15/16" Gang Shafts
Solid Mount Single Scrapers
Level Lift Hitch
1 Cast Single Lip Hitch for 2-1/4" Diameter Pin
Warning Light Kit, Complete with Wiring, SMV Emblem and Safety Chain

1810 SERIES RIGID FRAME, 11" BLADE SPACING			
Model Number	**SF1810-14**	**SF1810-16**	**SF1810-18**
Cutting Width	14’ 2’	15’ 10"	17’ 7"
Transport Width	15’ 10"	17’ 10"	19’ 10"
Transport Height	7’ 0"	7’ 0"	7’ 0"
Number of Blades F®	14 / 16	16 / 18	18 / 20

1830 SERIES FLEXIBLE FRAME, 11" BLADE SPACING						
Model Number	**SF1830-22**	**SF1830-24**	**SF1830-26**	**SF1830-30**	**SF1830-34**	**SF1830-38**
Cutting Width	22’ 10"	24’ 7"	26’ 4"	29’ 9"	33’ 3"	38’ 6"
Transport Width	13’ 11"	13’ 11"	14’ 10"	17’ 2"	15’ 10"	15’ 10"
Transport Height	12’ 10"	13’ 6"	14’ 2"	15’ 6"	15’ 9"	17’ 9"
Number of Blades F®	24 / 26	26 / 28	28 / 30	32 / 34	36 / 38	42 / 44

1810 SERIES RIGID FRAME, 13" BLADE SPACING		
Model Number	**SF1810-14**	**SF1810-16**
Cutting Width	14’ 4"	16’ 4"
Transport Width	15’ 11"	18’ 5"
Transport Height	7’ 0"	7’ 0"
Number of Blades F®	12 / 14	14 / 16

1830 SERIES FLEXIBLE FRAME, 13" BLADE SPACING					
Model Number	**SF1830-22**	**SF1830-26**	**SF1830-30**	**SF1830-34**	**SF1830-38**
Cutting Width	22’ 6"	26’ 8"	30’ 9"	34’ 11"	39’ 0"
Transport Width	13’ 11"	14’ 10"	17’ 2"	16’ 0"	16’ 0"
Transport Height	12’ 10"	14’ 2"	15’ 10"	15’ 9"	17’ 9"
Number of Blades F®	20 / 22	24 / 26	28 / 30	32 / 34	36 / 38

SUNFLOWER

Mississippi State Contract Discount: 5%

1810 and 1830 SERIES TANDEM DISC

ORDER CODE	CUTTING WIDTH	BLADE DIAMETER	APPROX. WEIGHT (LBS)	5/16" THICK BLADES PLAIN	5/16" THICK BLADES NOTCHED	NOTCHED FRONT PLAIN REAR

For Quotation Purposes Only – Please Order Items from the Groups on the Next Pages

Rigid Bearing Gangs - 11" Blade Spacing (Non-Folding Models)						
SF1810-18	17' 17"	28"	12,661	43,983.00	44,591.00	44,271.00
SF1810-18	17' 17"	30"	12,661	45,237.00	45,921.00	45,561.00
Spring Cushion Gangs - 11" Blade Spacing (Non-Folding Models)						
SF1810-14	14' 2"	28"	12,702	46,085.00	46,565.00	46,309.00
SF1810-14	14' 2"	30"	12,702	47,075.00	47,615.00	47,327.00
SF1810-16	15' 10"	28"	13,580	49,052.00	49,596.00	49,308.00
SF1810-16	15' 10"	30"	13,580	50,174.00	50,786.00	50,462.00
Rigid Bearing Gangs - 11" Blade Spacing (Folding Models)						
SF1830-24	24' 7"	28"	23,771	83,600.00	83,752.00	83,304.00
SF1830-24	24' 7"	30"	23,771	84,670.00	85,642.00	85,138.00
SF1830-26	26' 4"	28"	24,209	84,123.00	85,051.00	84,571.00
SF1830-26	26' 4"	30"	24,209	86,037.00	87,081.00	86,541.00
SF1830-30	29' 9"	28"	26,546	92,033.00	93,089.00	92,545.00
SF1830-30	29' 9"	30"	26,546	94,211.00	95,399.00	94,787.00
Spring Cushion Gangs - 11" Blade Spacing (Folding Models)						
SF1830-22	22' 10"	28"	26,934	98,830.00	99,630.00	99,214.00
SF1830-22	22' 10"	30"	26,934	100,480.00	101,380.00	100,912.00
SF1830-24	24' 7"	28"	28,228	100,192.00	101,056.00	100,608.00
SF1830-24	24' 7"	30"	28,228	101,974.00	102,946.00	102,442.00
SF1830-26	26' 4"	28"	28,823	101,426.00	102,354.00	101,874.00
SF1830-26	26' 4"	30"	28,823	103,340.00	104,384.00	103,844.00
SF1830-30	29' 9"	28"	31,559	110,574.00	111,630.00	111,086.00
SF1830-30	29' 9"	30"	31,559	112,752.00	113,940.00	113,328.00
SF1830-34	33' 3"	28"	37,014	131,586.00	132,770.00	132,162.00
SF1830-34	33' 3"	30"	37,014	134,028.00	135,360.00	134,676.00
SF1830-38	38' 6"	28"	38,425	136,281.00	137,657.00	136,953.00
SF1830-38	38' 6"	30"	38,425	139,119.00	140,667.00	139,875.00

1810 and 1830 SERIES TANDEM DISC

ORDER CODE	CUTTING WIDTH	BLADE DIAMETER	APPROX. WEIGHT (LBS)	5/16" THICK BLADES PLAIN	5/16" THICK BLADES NOTCHED	NOTCHED FRONT PLAIN REAR
For Quotation Purposes Only – Please Order Items from the Groups on the Next Pages						
Rigid Bearing Gangs - 13" Blade Spacing (Non-Folding Models)						
SF1810-14	14' 4"	30"	11,152	38,916.00	39,332.00	39,108.00
SF1810-16	16' 4"	30"	11,695	40,523.00	41,003.00	40,747.00
Spring Cushion Gangs - 13" Blade Spacing (Non-Folding Models)						
SF1810-14	14' 4"	30"	11,152	46,085.00	46,501.00	46,227.00
SF1810-16	16' 4"	30"	11,695	49,052.00	49,532.00	49,276.00
Spring Cushion Gangs - 13" Blade Spacing (Folding Models)						
SF1830-22	22' 6"	30"	26,669	98,830.00	99,502.00	99,150.00
SF1830-26	26' 8"	30"	28,666	101,426.00	102,226.00	101,810.00
SF1830-30	30' 9"	30"	31,235	110,574.00	111,502.00	111,022.00
SF1830-34	34' 11"	30"	36,777	131,586.00	132,642.00	132,098.00
SF1830-38	39' 0"	30"	37,568	136,281.00	137,465.00	136,857.00

Mississippi State Contract Discount: 5%

1810 and 1830 SERIES TANDEM DISCS

ORDER CODE	DESCRIPTION	APPROX. WEIGHT (LBS)	LIST PRICE
	Select One Order Code from Each Group, 01 through 03 as Required.		
Group 01	**Base Machine**		
Rigid Bearing Gangs - 11" Blade Spacing with 28" x 5/16" Blades			
109116RAW	SF1810-18 Non-Folding Model		42,764.00
245482RAW	SF1830-24 Folding Model		80,957.00
244661RAW	SF1830-26 Folding Model		82,192.00
245727RAW	SF1830-30 Folding Model		90,102.00
Spring Cushion Gangs - 11" Blade Spacing (Non-Folding Models)			
245441RAW	SF1810-14 Non-Folding Model		44,866.00
245454RAW	SF1810-16 Non-Folding Model		47,833.00
108984RAW	SF1830-22 Folding Model		96,899.00
245463RAW	SF1830-24 Folding Model		98,261.00
243274RAW	SF1830-26 Folding Model		99,495.00
242961RAW	SF1830-30 Folding Model		108,643.00
245403RAW	SF1830-34 Folding Model		129,655.00
245190RAW	SF1830-38 Folding Model		134,350.00
Rigid Bearing Gangs - 13" Blade Spacing with 30" x 5/16" Blades			
245734RAW	SF1810-14 Non-Folding Model		37,697.00
245740RAW	SF1810-16 Non-Folding Model		39,304.00
Spring Cushion Gangs - 13" Blade Spacing with 30" x 5/16" Blades			
245348RAW	SF1810-14 Non-Folding Model		44,866.00
109124RAW	SF1810-16 Non-Folding Model		47,833.00
109018RAW	SF1830-22 Folding Model		96,899.00
243273RAW	SF1830-26 Folding Model		99,495.00
243200RAW	SF1830-30 Folding Model		108,643.00
244648RAW	SF1830-34 Folding Model		129,655.00
245173RAW	SF1830-38 Folding Model		134,350.00
Group 02	**Blades - Order one per Chart on page 48**		
106075AW	Blade, 28" x 5/16" Plain (in base on 11" Blade Spacing)	57.9	No Charge
107773AW	Blade, 28" x 5/16" Notched (for 11" Blade Spacing)	52.7	16.00
107774AW	Blade, 30" x 5/16" Plain (for 11" Blade Spacing)	65.8	33.00
107775AW	Blade, 30" x 5/16" Notched (for 11" Blade Spacing)	60.5	51.00
	13" Blade Spacing		
106021AW	Blade, 30" x 5/16" Plain (in base on 13" Blade Spacing)	65.8	No Charge
108044AW	Blade, 30" x 5/16" Notched (for 13" Blade Spacing)	60.5	16.00
Group 03	**Tires**		
22'-30'			
354820AW	385/65R 22.50 / Used Tires with 8 Bolt Hubs		In Base
354536AW	385/65R 22.50 / New Tires with 8 Bolt Hubs		4,924.00
34'+			
354821AW	385/65R 22.50 / Used Tires with 10 Bolt Hubs		In Base
354337AW	385/65R 22.50 / New Tires with 10 Bolt Hubs		4,924.00
Group 04	**Depth Control - in price of built up units on page 49 (Optional)**		
244654AW	Single Point Depth Control	49	712.00
Group 05	**Hydraulic Leveler - in price of built up units on page 49 (Optional)**		
107440AW	Hydraulic Leveler	85	1,219.00

1810 and 1830 SERIES TANDEM DISCS

Configuration	Model	Front and Rear Bearings Right/Left	Total Number of Blades	Scrapers Bearing Standard Right/Left	Scrapers Clean Spool Right/Left Front/Rear	Scrapers Rotary Front/Rear Total	Blades Notched Front / Plain Rear
Rigid Bearing Gangs 11" Spacing	SF1810-18	8/8	38	8/8	10/12	32	18/20
	SF1830-24	10/10	54	10/10	16/18	48	26/28
	SF1830-26	10/10	58	10/10	18/20	52	28/30
	SF1830-30	12/12	66	12/12	20/22	60	32/34
Spring Cushion Gangs 11" Spacing	SF1810-14	6/6	30	6/6	8/10	24	14/16
	SF1810-16	7/7	34	7/7	10/10	28	16/18
	SF1830-22	11/11	50	11/11	14/14	44	24/26
	SF1830-24	11/11	54	11/11	16/16	48	26/28
	SF1830-26	12/12	58	12/12	17/17	52	28/30
	SF1830-30	14/14	66	14/14	19/19	60	32/34
	SF1830-34	17/17	74	17/17	20/20	68	36/38
	SF1830-38	19/19	86	19/19	24/24	80	42/44
Rigid Bearing Gangs 13" Spacing	SF1810-14	6/6	26	6/6	7/7	20	12/14
	SF1810-16	6/6	30	6/6	9/9	24	14/16
Spring Cushion Gangs 13" Spacing	SF1810-14	6/6	26	6/6	7/7	20	12/14
	SF1810-16	6/6	30	6/6	9/9	24	14/16
	SF1830-22	10/10	42	10/10	10/12	36	20/22
	SF1830-26	11/11	50	11/11	14/14	44	24/26
	SF1830-30	13/13	58	13/13	16/16	52	28/30
	SF1830-34	15/15	66	15/15	18/18	60	32/34
	SF1830-38	17/17	74	17/17	20/20	68	36/38

ORDER CODE	DESCRIPTION	APPROX. WEIGHT (LBS)	LIST PRICE

SCRAPER OPTIONS **(in Lieu of Standard Solid Mount Single Scrapers)**

Order Right and Left Hand for a Complete Set (Order 1 per Bearing Indicated for the Right and Left from Above Chart)

107444-11RAW	Scraper, RH for Bearing Standard, for 11" Blade Spacing . .	23	72.00
107444-11LAW	Scraper, LH for Bearing Standard, for 11" Blade Spacing . .	23	72.00
107444-13RAW	Scraper, RH for Bearing Standard, for 13" Blade Spacing . .	25	72.00
107444-13LAW	Scraper, LH for Bearing Standard, for 13" Blade Spacing . .	25	72.00

Order Right and Left Hand for a Complete Set (Order 1 per Blade Indicated for the Right and Left from Above Chart)

108571AW	Scraper, RH to Clean Spool and Blade	8	31.00
108572AW	Scraper, LH to Clean Spool and Blade	8	31.00
108063AW	Scraper, Rotary (Order one per Blade minus 6)	9	114.00

Note: To order the Rotary Scraper options refer to page 1000-40 for the number of blades on the front and rear gangs.
To order Rotary Scrapers for the front & rear gangs OR the rear gang only; reduce the blade count (order quantity) by (6).

ORDER CODE	DESCRIPTION	APPROX. WEIGHT (LBS)	LIST PRICE

OPTIONAL EQUIPMENT

Bearing Options

109820AW	Bearing Guard (Order one for each Bearing)	8	43.00
104884AW	Washer, Bearing Guard (Order two for each Bearing)	.41	4.00

Miscellaneous Options

350194AW	Rear Hitch, Single Lip for 1" Dia Pin (12' to 18' models) . . .	112	542.00
350195AW	Rear Hitch, Double Lip for 1" Dia Pin (12 ' to 18' models) . .	129	542.00
350192AW	Rear Hitch, Single Lip for 1" Dia Pin (22' to 30' models) . . .	120	542.00
350193AW	Rear Hitch, Double Lip for 1" Dia Pin (22' to 30' models) . .	137	542.00
238778AW	Rear Hydraulic Extension Package (18' and smaller)	27	478.00
247597AW	Rear Hydraulic Extension Package (22' and larger)	50	478.00
236099AW	Safety Light Extension	3	211.00

3 Row Heavy Duty Coil Tine Harrows

Spring Loaded Drag Arms with all Required Hardware and Mounting Brackets
Three rows of 5/8" x 26" Coil Tines on 12" Centers, 4" Spacing Overall, with Angle Adjustments and Backup Protection and 12" Spacing Between Rows

Model Number	Overlap Each Side	Harrow Section Size			Number of Mounting Arms
		4' 0"	6' 0"	8' 0"	
SF1810-14	11' 0"	N/A	N/A	2	2
SF1810-16	13' 0"	N/A	3	N/A	3
SF1810-18	14' 6"	N/A	2	1	4
SF1830-22	7' 0"	N/A	N/A	3	6
SF1830-24	8' 6"	1	1	2	6
SF1830-26	10' 0"	N/A	2	2	6
SF1830-30	13' 6"	N/A	N/A	4	6
SF1830-34	16' 6"	N/A	6	N/A	9
SF1830-38	21' 0"	N/A	3	3	9

245875AW	SF1810-14	1,130	4,655.00
245876AW	SF1810-16	1,356	5,615.00
245877AW	SF1810-18	1,536	6,304.00
245878AW	SF1810-22	2,201	8,488.00
245879AW	SF1810-24	2,336	9,269.00
245880AW	SF1810-26	2,406	9,388.00
245881AW	SF1830-30	2,606	10,018.00
245882AW	SF1830-34	3,162	12,464.00
245884AW	SF1830-38	3,413	13,288.00

1810 and 1830 SERIES TANDEM DISCS

ORDER CODE	DESCRIPTION	APPROX. WEIGHT (LBS)	LIST PRICE

OPTIONAL EQUIPMENT

2 Row Heavy Duty Coil Tine Harrow with Flat Bar Basket

Spring Loaded Drag Arms with all Required Hardware and Mounting Brackets
Two rows of 5/8" x 26" Coil Tines on 12" Centers, 6" Spacing Overall,
with Angle Adjustments and Backup Protection and 12" Spacing Between Rows
13" Diameter Basket with Eight 1/4" x 1-1/4" Flat Blades and Triple Lip Sealed
Flange Bearings with Lube Fitting. Basket widths; 4.5', 6' and 7.5'

Model Number	Overlap Each Side	Harrow Section Size			Number of Mounting Arms
		4" 0"	6' 0"	8' 0"	
SF1810-14	11' 0"	N/A	N/A	2	2
SF1810-16	13' 0"	N/A	3	N/A	3
SF1810-18	14' 6"	N/A	2	1	4
SF1830-22	7' 0"	N/A	N/A	3	6
SF1830-24	8' 6"	1	1	2	6
SF1830-26	10' 0"	N/A	2	2	6
SF1830-30	13' 6"	N/A	N/A	4	6
SF1830-34	16' 6"	N/A	6	N/A	9
SF1830-38	21' 0"	N/A	3	3	9

246306AW	SF1810-14	. . . . .	1,455	7,055.00
246307AW	SF1810-16	. . . . .	1,804	9,093.00
246308AW	SF1810-18	. . . . .	1,996	9,915.00
246309AW	SF1810-22	. . . . .	2,690	12,892.00
246310AW	SF1810-24	. . . . .	2,953	14,613.00
246311AW	SF1810-26	. . . . .	3,032	14,852.00
246312AW	SF1830-30	. . . . .	3,256	15,670.00
246313AW	SF1830-34	. . . . .	4,067	20,242.00
246315AW	SF1830-38	. . . . .	4,353	21,408.00

2000 Series

2500 SERIES THREE SECTION FLEXIBLE CHISEL PLOWS

F.O.B. Beloit, KS

STANDARD CONFIGURATION

13’ through 23’ Sizes
4 12R22.5 x 8.25 (used) Tires
4 8-Bolt 10" Rims
2 Walking Tandem Axle with 2-1/2" Spindles

25’ through 47’ Sizes
Level Lift or Floating Hitch (Select One)

Level Lift:
2 Caster Gauge Wheels & Ratchet Jacks
2 9.5L x 15 8-Ply Tires
2 6-Bolt 15 x 8 Rims
8 12R22.5 x 8.25 (Used) Tires
8 8-Bolt 10" Rims
4 Walking Tandems with 2-1/2" Spindles
8 8-Bolt Hubs

Floating Hitch:
4 Hydraulic Controlled Gauge Wheels
4 31 x 13.5 - 15 12Ply Tires
4 6-Bolt 15 x 8 Rims
8 12R22.5 x 8.25 (Used) Tires
8 8-Bolt 10" Rims
4 Walking Tandems with 2-1/2" Spindles
8 8-Bolt Hubs

ALL SIZES
13’ Main Frame
4" x 4" 4-Bar Welded 140" Deep Tube Frame 4-1/2" O.D. Main Lift Axle
2 Main Lift Cylinders and Hose
Single Point Depth Control
Cat V Hitch (for use with 2" pin)
1 Screw Type Tongue Jack
Safety Chain
Transport Warning Light Package
12" or 15" Shank Spacings
Shank Options:
650 Pound 1-1/4" x 2" x 32" Extension Spring Shank
1000 Pound 1-1/4" x 2" x 30" Compression Spring “On-Edge” Shank

Point Options:
Spike 7/8" x 2" x 19-1/2" with Hardware
Twisted Concave Spike, 1/2" x 3" with Hardware (Adapter Plate Required for Twisted Points)

SUNFLOWER

Mississippi State Contract Discount: 5%

2500 SERIES THREE SECTION FLEXIBLE CHISEL PLOWS

Specifications for 12" and 15" Spacing with
1000 Pound Compression Spring Shanks and Level Lift Hitch

13' (3.96m) Main Frame Center

Model	Transport Width ft (m)	Transport Height ft (m)	Stub / Wing Size ft (m)	12" Spacing			15" Spacing		
				Cutting Width ft (m)	Number of Shanks	Weight lbs (kg)	Cutting Width ft (m)	Number of Shanks	Weight lbs (kg)
SF2510-13	13' 6" (4.1)	6' 8" (2.8)	0	13' (3.96)	13	6,694 (3,036)	12' 6" (3.81)	10	6,289 (2853)
SF2510-15	14' 8" (4.37)	6' 8" (2.8)	1' (0.03)	15' (4.6)	15	7,024 (3,186)	15' 0" (4.6)	12	6619 (3,002)
SF2510-17	17' 1" (5.21)	6' 8" (2.8)	2' (0.06)	17' (5.2)	17	7,456 (3,382)	17' 6" (5.3)	14	7051 (3,198)
SF2530-19	14' 1" (4.29)	9' 9" (2.97)	0'/3' (0.91)	19' 0" (5.79)	19	8,652 (3,925)	N/A	N/A	N/A
SF2530-19-21	14' 1" (4.29)	9' 11" (3.02)	1' (0.03)/3' (0.91)	21' 0" (6.40)	21	8,977 (4,072)	20' 0" (6.10)	16	8,302 (3,766)
SF2530-19-23	14' 1" (4.29)	10' 1" (3.07)	2' (0.06)/3' (0.91)	23' 0" (7.01)	23	9,410 (4,268)	22' 6" (6.86)	18	8,735 (3,962)
SF2530-25	14' 1" (4.29)	11' 1" (3.38)	0'/6' (1.83)	25' 0" (7.62)	25	11,404 (5,173)	25' 0"	20	10,729 (4,867)
SF2530-25-27	14' 1" (4.29)	11' 1" (3.38)	1' (0.03)/6' (1.83)	27' 0" (8.23)	27	11,734 (5,325)	27' 6"	22	11,059 (5,016)
SF2530-25-29	14' 1" (4.29)	11' 1" (3.38)	2' (0.06)/6' (1.83)	29' 0" (8.84)	29	12,167 (5,519)	30' 0"	24	11,452 (5,194)
SF2530-31	19' 2" (5.84)	12' 6" (3.81)	0'/9' (2.74)	31' 0" (9.45)	31	15,171 (6,882)	30' 0" (9.14)	24	14,253 (6,465)
SF2530-31-33	19' 2" (5.84)	13' 6" (4.11)	1' (0.03)/9' (2.74)	33' 0" (10.06)	33	15,528 (7,044)	32' 6" (9.91)	26	14,583 (6,615)
SF2530-31-35	19' 2" (5.84)	14' 6" (4.42)	2' (0.06) /9' (2.74)	35' 0" (10.67)	35	15,961 (7,240)	35' 0' (10.67)	28	15,016 (6,811)
SF2530-31-37	19' 2" (5.84)	12' 6" (3.81)	0'/9' (2.74) & 3' (.91)	37' 0" (11.28)	37	17,267 (7,832)	37' 6" (11.43)	30	16,322 (7,404)
SF2530-31-39	19' 2" (5.84)	12' 6" (3.81)	1' (0.03)/9' (2.74) & 3' (0.91)	39' 0" (11.89)	37	17,597 (7,982)	40' 0" (12.19)	32	16,652 (7,553)
SF2530-31-41	19' 2" (5.84)	12' 6" (3.81)	2' (0.06)/9' (2.74) & 3' (0.91)	41' 0" (12.50)	41	18,029 (8,178)	42' 6" (12.95)	34	17,084 (7,749)
SF2530-37	19' 2" (5.84)	15' 6" (4.72)	0'/12' (3.66)	37' 0" (11.23)	37	16,649 (7,552)	37' 6" (11.43)	30	15,704 (7,123)
SF2530-37-39	19' 2" (5.84)	16' 6" (5.03)	1' (0.03)/12' (3.66)	39' 0" (11.89)	39	16,979 (7,702)	40' 0" (12.19)	32	16,034 (7,273)
SF2530-37-43	19' 2" (5.84)	16' 6" (5.03)	0'/12' (3.66) & 3' (0.91)	43' 0" (13.11)	43	18,767 (8,513)	42' 6" (12.95)	34	17,552 (7,962)
SF2530-37-45	19' 2" (5.84)	16' 6" (5.03)	1' (0.03)/12' (3.66) & 3' (0.91)	45' 0" (13.72)	45	19,097 (8,662)	45' 0" (13.72)	36	17,882 (8,111)
SF2530-37-47	19' 2" (5.84)	16' 6" (5.03)	2' (0.06)/12' (3.66) & 3' (0.91)	47' 0" (14.33)	47	19,530 (8,859)	47' 6" (14.49)	38	18,315 (8,308)

2500 SERIES THREE SECTION FLEXIBLE CHISEL PLOWS

These prices reflect the standard configuration. If items other than those listed in the standard configuration are ordered, then the quoted price below will change.

For Quotation Purposes Only – Please Order Items from the Groups on the Next Pages

MODEL NUMBER	FRAME DESCRIPTION	EST. WT.	LIST PRICE
LEVEL LIFT TONGUE, 12" SHANK SPACING -			
with 1000 Pound "On-Edge" Compression Spring Shanks (1-1/4" X 2" X 30")			
SF2510-13	Three Section 13 Shank Chisel Plow	8035	25,943.00
SF2510-15	Three Section 15 Shank Chisel Plow	8181	27,482.00
SF2510-17	Three Section 17 Shank Chisel Plow	8553	29,276.00
SF2530-19	Three Section 19 Shank Chisel Plow	8699	35,001.00
SF2530-21	Three Section 21 Shank Chisel Plow	8925	36,541.00
SF2530-23	Three Section 23 Shank Chisel Plow	9411	38,336.00
SF2530-25	Three Section 25 Shank Chisel Plow	9557	47,387.00
SF2530-27	Three Section 27 Shank Chisel Plow	9783	48,926.00
SF2530-29	Three Section 29 Shank Chisel Plow	9135	50,721.00
SF2530-31	Three Section 31 Shank Chisel Plow	9369	60,303.00
SF2530-33	Three Section 33 Shank Chisel Plow	9917	61,842.00
SF2530-35	Three Section 35 Shank Chisel Plow	10151	63,636.00
SF2530-37E	Three Section 37 Shank Chisel Plow	10465	69,429.00
SF2530-37	Three Section 37 Shank Chisel Plow	11039	64,958.00
SF2530-39E	Three Section 39 Shank Chisel Plow	11273	70,968.00
SF2530-39	Three Section 39 Shank Chisel Plow	11587	66,498.00
SF2530-41	Three Section 41 Shank Chisel Plow	11587	72,763.00
SF2530-43	Three Section 43 Shank Chisel Plow	11587	74,084.00
SF2530-45	Three Section 45 Shank Chisel Plow	11587	75,687.00
SF2530-47	Three Section 47 Shank Chisel Plow	11587	77,482.00

SUNFLOWER

Mississippi State Contract Discount: 5%

2500 SERIES THREE SECTION FLEXIBLE CHISEL PLOWS

ORDER CODE	DESCRIPTION	APPROX. WEIGHT (LBS)	LIST PRICE
	Select One Order Code from Each Group, 01 through 05.		
Group 01	**Base Machine (12" or 15" Spacing)**		
SF2510-13	352370AW, Three Section 13/10 Shank Chisel Plow	3961	14,302.00
SF2510-15	352371AW, Three Section 15/12 Shank Chisel Plow	4021	14,515.00
SF2510-17	352372AW, Three Section 17/14 Shank Chisel Plow	4183	14,983.00
SF2530-19	352373AW, Three Section 19 Shank Chisel Plow	5131	19,382.00
SF2530-21	352374AW, Three Section 21/16 Shank Chisel Plow	5191	19,596.00
SF2530-23	352375AW, Three Section 23/18 Shank Chisel Plow	5354	20,065.00
SF2530-25	352376AW, Three Section 25/20 Shank Chisel Plow	6698	24,524.00
SF2530-27	352377AW, Three Section 27/22 Shank Chisel Plow	6758	24,737.00
SF2530-29	352378AW, Three Section 29/24 Shank Chisel Plow	6920	25,206.00
SF2530-31	352379AW, Three Section 31/24 Shank Chisel Plow	8751	31,687.00
SF2530-33	352380AW, Three Section 33/26 Shank Chisel Plow	8812	31,900.00
SF2530-35	352381AW, Three Section 35/28 Shank Chisel Plow	8974	32,368.00
SF2530-37E	352382AW, Three Section 37/30 Shank Chisel Plow Extended	10010	36,835.00
SF2530-37	352384AW, Three Section 37/30 Shank Chisel Plow	9382	32,364.00
SF2530-39E	352399AW, Three Section 39/32 Shank Chisel Plow Extended	10070	37,048.00
SF2530-39	352385AW, Three Section 39/32 Shank Chisel Plow	9443	32,578.00
SF2530-41	352383AW, Three Section 41 Shank Chisel Plow	10232	37,517.00
SF2530-43	352386AW, Three Section 43/34 Shank Chisel Plow	10690	37,512.00
SF2530-45	352387AW, Three Section 45/35 Shank Chisel Plow	10750	37,789.00
SF2530-47	352388AW, Three Section 47/38 Shank Chisel Plow	10913	38,258.00
Group 02	**Shanks Order Quantity Indicated Above**		
354553AW	650 lb Chisel Flow Shank (12" or 15" Spacing)	3441	427.00
353960AW	1000 lb Edge On Spring Shank Assembly (12" or 15" Spacing)	4061	633.00
Group 04	**Tires**		
For 2510, 2530-19, 2530-21 & 2530-23			
353461AW	(4) Used 12R22.5 x 8.25	704	2,188.00
354517AW	(4) New 12R22.5 x 8.25		4,000.00
For 2530-25 through 2530-29			
353460AW	(6) Used 12R22.5 x 8.25	1056	3,283.00
354516AW	(6) New 12R22.5 x 8.25		6,000.00
31' and Larger, for use with Level Lift Hitch			
353458AW	Used Tire Package, (8) 12R22.5 x 8.25 and (2) 9.5L x 15	1524	5,058.00
354514AW	New Tire Package, (8) New 12R22.5 x 8.25 and (2) 9.5L x 15		8,688.00
31' and Larger, for use with Floating Hitch			
353459AW	Used Tire Package, (8) 12R22.5 x 8.25 and (4) 31 x 13.5	1465	6,800.00
354515AW	New Tire Package, (8) 12R22.5 x 8.25 and (4) 31 x 13.5		10,533.00
Group 05	**Front Hitches**		
353443AW	Level Lift Hitch for use with 29' and Smaller	242	834.00
353787AW	Level Lift Hitch for use with 31' and Larger	649	3,005.00
353786AW	Floating Hitch for use with 31' and Larger	2082	9,571.00

2500 SERIES THREE SECTION FLEXIBLE CHISEL PLOWS

ORDER CODE	DESCRIPTION	APPROX. WEIGHT (LBS)	LIST PRICE
OPTIONAL EQUIPMENT - For Current Machines ONLY			
Spikes			
222696AW	Spike, 5/8 x 2 x 15" Reversible with Hardware		30.00
240690AW	Twisted Spike, Concave 3", LH with Hardware (Requires Adapter Plate)		33.00
240691AW	Twisted Spike, Concave 3", RH with Hardware (Requires Adapter Plate)		33.00
352261AW	Adapter Plate LH (Concave Twist)		13.00
352262AW	Adapter Plate RH (Concave Twist)		13.00
Attachments			
2510-13			
236068AW	3-Bar Coil Tine Harrow (5/8" x 26" Tines)	824	3,013.00
353971AW	4-Bar Coil Tine Harrow (5/8" x 26" Tines)		3,578.00
245949AW	2-Bar Coil Tine Harrow (5/8" x 26" Tines) with Flat Bar Basket	1163	5,039.00
2510-15			
236069AW	3-Bar Coil Tine Harrow (5/8" x 26" Tines)	907	3,266.00
353972AW	4-Bar Coil Tine Harrow (5/8" x 26" Tines)		3,802.00
245950AW	2-Bar Coil Tine Harrow (5/8" x 26" Tines) with Flat Bar Basket	1262	5,332.00
2510-17			
353485AW	3-Bar Coil Tine Harrow (5/8" x 26" Tines)	1127	4,089.00
353973AW	4-Bar Coil Tine Harrow (5/8" x 26" Tines)		5,072.00
353905AW	2-Bar Coil Tine Harrow (5/8" x 26" Tines) with Flat Bar Basket	1611	7,168.00
2530-19			
236070AW	3-Bar Coil Tine Harrow (5/8" x 26" Tines)	1344	5,369.00
353974AW	4-Bar Coil Tine Harrow (5/8" x 26" Tines)		6,626.00
245951AW	2-Bar Coil Tine Harrow (5/8" x 26" Tines) with Flat Bar Basket	1969	9,226.00
2530-21			
236071AW	3-Bar Coil Tine Harrow (5/8" x 26" Tines)	1428	5,623.00
353975AW	4-Bar Coil Tine Harrow (5/8" x 26" Tines)		6,852.00
245952AW	2-Bar Coil Tine Harrow (5/8" x 26" Tines) with Flat Bar Basket	2069	9,518.00
2530-23			
236072AW	3-Bar Coil Tine Harrow (5/8" x 26" Tines)	1771	6,588.00
353976AW	4-Bar Coil Tine Harrow (5/8" x 26" Tines)		7,428.00
245953AW	2-Bar Coil Tine Harrow (5/8" x 26" Tines) with Flat Bar Basket	2320	10,303.00
2530-25			
236075AW	3-Bar Coil Tine Harrow (5/8" x 26" Tines)	1868	6,949.00
353977AW	4-Bar Coil Tine Harrow (5/8" x 26" Tines)		8,065.00
245958AW	2-Bar Coil Tine Harrow (5/8" x 26" Tines) with Flat Bar Basket	2513	11,215.00
2530-27			
236076AW	3-Bar Coil Tine Harrow (5/8" x 26" Tines)	2028	7,473.00
353945AW	4-Bar Coil Tine Harrow (5/8" x 26" Tines)		8,290.00
245959AW	2-Bar Coil Tine Harrow (5/8" x 26" Tines) with Flat Bar Basket	2609	11,502.00
2530-29			
236077AW	3-Bar Coil Tine Harrow (5/8" x 26" Tines)	2112	7,727.00
353978AW	4-Bar Coil Tine Harrow (5/8" x 26" Tines)		8,515.00
245960AW	2-Bar Coil Tine Harrow (5/8" x 26" Tines) with Flat Bar Basket	2709	11,795.00

2500 SERIES THREE SECTION FLEXIBLE CHISEL PLOWS

ORDER CODE	DESCRIPTION	APPROX. WEIGHT (LBS)	LIST PRICE
OPTIONAL EQUIPMENT - For Current Machines ONLY			
Attachments			
2530-31			
236078AW	3-Bar Coil Tine Harrow (5/8" x 26" Tines)	2081	7,616.00
353946AW	4-Bar Coil Tine Harrow (5/8" x 26" Tines)		8,741.00
245961AW	2-Bar Coil Tine Harrow (5/8" x 26" Tines) with Flat Bar Basket	2818	11,887.00
2530-33			
236079AW	3-Bar Coil Tine Harrow (5/8" x 26" Tines)	2295	8,787.00
353979AW	4-Bar Coil Tine Harrow (5/8" x 26" Tines)		10,701.00
245962AW	2-Bar Coil Tine Harrow (5/8" x 26" Tines) with Flat Bar Basket	3262	14,701.00
2530-35			
236080AW	3-Bar Coil Tine Harrow (5/8" x 26" Tines)	2415	9,131.00
353980AW	4-Bar Coil Tine Harrow (5/8" x 26" Tines)		10,926.00
245963AW	2-Bar Coil Tine Harrow (5/8" x 26" Tines) with Flat Bar Basket	3361	14,993.00
2530-37E			
236081AW	3-Bar Coil Tine Harrow (5/8" x 26" Tines)	2630	10,215.00
353982AW	4-Bar Coil Tine Harrow (5/8" x 26" Tines)		11,838.00
245964AW	2-Bar Coil Tine Harrow (5/8" x 26" Tines) with Flat Bar Basket	3654	16,158.00
2530-37			
236083AW	3-Bar Coil Tine Harrow (5/8" x 26" Tines)	2640	9,823.00
353981AW	4-Bar Coil Tine Harrow (5/8" x 26" Tines)		11,838.00
245966AW	2-Bar Coil Tine Harrow (5/8" x 26" Tines) with Flat Bar Basket	3639	15,874.00
2530-39E			
236082AW	3-Bar Coil Tine Harrow (5/8" x 26" Tines)	2686	10,230.00
353983AW	4-Bar Coil Tine Harrow (5/8" x 26" Tines)		11,734.00
245965AW	2-Bar Coil Tine Harrow (5/8" x 26" Tines) with Flat Bar Basket	3724	16,366.00
2530-39			
236084AW	3-Bar Coil Tine Harrow (5/8" x 26" Tines)	2724	10,068.00
353948AW	4-Bar Coil Tine Harrow (5/8" x 26" Tines)		12,064.00
245967AW	2-Bar Coil Tine Harrow (5/8" x 26" Tines) with Flat Bar Basket	3738	16,165.00
2530-41			
351793AW	3-Bar Coil Tine Harrow (5/8" x 26" Tines)	2957	10,792.00
353947AW	4-Bar Coil Tine Harrow (5/8" x 26" Tines)		12,641.00
353906AW	2-Bar Coil Tine Harrow (5/8" x 26" Tines) with Flat Bar Basket	3975	17,143.00
2530-43			
236086AW	3-Bar Coil Tine Harrow (5/8" x 26" Tines)	3157	12,342.00
353984AW	4-Bar Coil Tine Harrow (5/8" x 26" Tines)		16,033.00
245968AW	2-Bar Coil Tine Harrow (5/8" x 26" Tines) with Flat Bar Basket	4481	20,335.00
2530-45			
236091AW	3-Bar Coil Tine Harrow (5/8" x 26" Tines)	3213	12,281.00
353985AW	4-Bar Coil Tine Harrow (5/8" x 26" Tines)		15,793.00
245969AW	2-Bar Coil Tine Harrow (5/8" x 26" Tines) with Flat Bar Basket	4540	20,340.00
2530-47			
353486AW	3-Bar Coil Tine Harrow (5/8" x 26" Tines)	3449	12,731.00
353986AW	4-Bar Coil Tine Harrow (5/8" x 26" Tines)		15,549.00
353909AW	2-Bar Coil Tine Harrow (5/8" x 26" Tines) with Flat Bar Basket	4781	21,124.00

Mississippi State Contract Discount: 5%

2500 SERIES THREE SECTION FLEXIBLE CHISEL PLOWS

ORDER CODE	DESCRIPTION	APPROX. WEIGHT (LBS)	LIST PRICE

OPTIONAL EQUIPMENT - For Current Machines ONLY

Miscellaneous

For 2530-31- 2530-47

353900AW	Rear Hitch.	850	2,130.00
238778AW	Hydraulic Extension Package (Pair)	24	478.00
236099AW	Safety Light Extension (Connects to Light Kit on Unit)	3	211.00

FACTORY OR DEALERSHIP ASSEMBLY AMOUNTS ON 3000 SERIES
(DISCOUNTS DO NOT APPLY)

The factory or dealership set-up amounts will be charged for machines set-up by Sunflower. Set-up amounts are the same whether machines are shipped via our truck (gangs off wings, etc.) or set-up completely and picked up by dealer's truck. Factory assembly charge includes hydraulic hose, hydraulic oil, and tips (hydraulic system is charged). Dealer location assembly charge includes hydraulic hose, and tips. (Hydraulic oil is not included) See note below.

MODEL NUMBER	FACTORY ORDER CODE	FACTORY SET-UP RATE	DEALER LOCATION ORDER CODE	DEALER LOCATION SET-UP RATE
SF3030-21 (Base Machine)	SET0062S	**1,091.00**	SET0062DS	**1,143.00**
SF3030-25 (Base Machine)	SET0063S	**1,204.00**	SET0063DS	**1,262.00**
SF3040-28 (Base Machine)	SET0064S	**1,402.00**	SET0064DS	**1,469.00**
SF3040-32 (Base Machine)	SET0065S	**1,516.00**	SET0065DS	**1,588.00**
SF3050-35 (Base Machine)	SET0066S	**1,725.00**	SET0066DS	**1,807.00**
SF3060-42 (Base Machine)	SET0067S	**2,188.00**	SET0067DS	**2,292.00**
SF3070-49 (Base Machine)	SET0068S	**2,606.00**	SET0068DS	**2,730.00**
SF3372-40 (Base Machine)	SET0056S	**2,217.00**	SET0056DS	**2,322.00**
SF3392-52 (Base Machine)	SET0057S	**2,918.00**	SET0057DS	**3,057.00**
SF3662-30 (Base Machine)	SET0058S	**1,887.00**	SET0058DS	**1,977.00**
SF3672-35 (Base Machine)	SET0059S	**2,188.00**	SET0059DS	**2,292.00**
SF3692-45 (Base Machine)	SET0060S	**2,900.00**	SET0060DS	**3,038.00**
SF3612-55 (Base Machine)	SET0061S	**3,593.00**	SET0061DS	**3,764.00**
SF3030-21 (with Treaders)	SET0075S	**1,261.00**	SET0075DS	**1,321.00**
SF3030-25 (with Treaders)	SET0076S	**1,392.00**	SET0076DS	**1,459.00**
SF3040-28 (with Treaders)	SET0077S	**1,631.00**	SET0077DS	**1,708.00**
SF3040-32 (with Treaders)	SET0078S	**1,754.00**	SET0078DS	**1,837.00**
SF3050-35 (with Treaders)	SET0079S	**2,010.00**	SET0079DS	**2,105.00**
SF3060-42 (with Treaders)	SET0080S	**2,531.00**	SET0080DS	**2,651.00**
SF3070-49 (with Treaders)	SET0081S	**3,004.00**	SET0081DS	**3,147.00**
SF3372-40 (with Treaders)	SET0069S	**2,616.00**	SET0069DS	**2,740.00**
SF3392-52 (with Treaders)	SET0070S	**3,431.00**	SET0070DS	**3,595.00**
SF3662-30 (with Treaders)	SET0071S	**2,228.00**	SET0071DS	**2,334.00**
SF3672-35 (with Treaders)	SET0072S	**2,588.00**	SET0072DS	**2,712.00**
SF3692-45 (with Treaders)	SET0073S	**3,410.00**	SET0073DS	**3,573.00**
SF3612-55 (with Treaders)	SET0074S	**4,217.00**	SET0074DS	**4,418.00**
SF3030-21 (Coulters)	SET0082S	**370.00**	SET0082DS	**387.00**
SF3030-25 (Coulters)	SET0083S	**407.00**	SET0083DS	**427.00**
SF3040-28 (Coulters)	SET0084S	**492.00**	SET0084DS	**516.00**
SF3040-32 (Coulters)	SET0085S	**530.00**	SET0085DS	**556.00**
SF3050-35 (Coulters)	SET0086S	**616.00**	SET0086DS	**646.00**
SF3060-42 (Coulters)	SET0087S	**739.00**	SET0087DS	**774.00**
SF3060-49 (Coulters)	SET0088S	**862.00**	SET0088DS	**903.00**

SUNFLOWER RECOMMENDS THESE SET-UP FIGURES BE USED BY DEALERS WHEN TRANSFERRING EQUIPMENT

Dealership Assembly requirements:

1. The dealership assembly service must be ordered separately from the implement. (initiates scheduling of service) Please order dealership assembly service from the field installed options tab in e-ordering.
2. Include in the dealership assembly order request the order and/or invoice number of the implement to be assembled.
3. Dealer supplies hydraulic oil (oil is not included).
4. Dealer supplies a fork lift of sufficient size to be used by AGCO's assembly crew.

3000 SERIES FALLOW-KING

F.O.B. Beloit, KS

STANDARD EQUIPMENT

3 Section Model 3030

8 15" x 6" Six Bolt Wheels and Hubs with Zerks, 2" Spindles and Triple Lip Seals
4 Walking Beams with Greaseable Tapered Roller Bearings
1 Rephasing Lift System with two 3-1/2 x 10 and two 3-1/4 x 10 Hydraulic Cylinders
1 Fold System with two 4 x 24 Hydraulic Cylinders

4 Section Model 3040

10 15" x 6" Six Bolt Wheels and Hubs with Zerks, 2" Spindles and Triple Lip Seals
5 Walking Beams with Greaseable Tapered Roller Bearings
1 Rephasing Lift System with two 3-3/4 x 10, two 3-1/2 x 10 and one 3-1/4 x 10 Hydraulic Cylinders
1 Fold System with two 4 x 24 Hydraulic Cylinders
2 Gauge Wheels, 8.00 x 10 New Tires and Tubes, Five Bolt Hubs and Triple Lip Seals

5 Section Model 3050

12 15" x 6" Six Bolt Wheels and Hubs with Zerks, 2" Spindles and Triple Lip Seals
6 Walking Beams with Greaseable Tapered Roller Bearings
1 Rephasing Lift System with two 4 x 10, two 3-3/4 x 10, and two 3-1/2 x 10 Hydraulic Cylinders
1 Fold System with two 4 x 24 and one 4 x 30 Hydraulic Cylinders
2 Gauge Wheels, 8.00 x 10 New Tires and Tubes, Five Bolt Hubs and Triple Lip Seals

6 Section Model 3060

14 15" x 6" Six Bolt Wheels and Hubs with Zerks, 2" Spindles and Triple Lip Seals
7 Walking Beams with Greaseable Tapered Roller Bearings
1 Rephasing Lift System with two 4 x 10, two 3-3/4 x 10, two 3-1/2 x 10 and one 3-1/4 x 10 Hydraulic Cylinders
1 Fold System with two 4 x 24 and two 4 x 30 Hydraulic Cylinders
2 Gauge Wheels, 8.00 x 10 New Tires and Tubes, Five Bolt Hubs and Triple Lip Seals

7 Section Model 3070

16 15" x 6" Six Bolt Wheels and Hubs with Zerks, 2" Spindles and Triple Lip Seals
8 Walking Beams with Greaseable Tapered Roller Bearings
1 Rephasing Lift System with two 4 x 10, two 3-3/4 x 10, two 3-1/2 x 10 and two 3-1/4 x 10 Hydraulic Cylinders
1 Fold System with three 4 x 24, one 4 x 30, one 5 x 30 and one 3 x 8 Hydraulic Cylinders
2 Gauge Wheels, 8.00 x 10 New Tires and Tubes, Five Bolt Hubs and Triple Lip Seals

All Models

1 Single Point Depth Control
1 Hitch Leveling Ratchet Jack
1 Tongue Jack
1 SMV Emblem
Single Lip Hitch with 2" Oblong Pin Hole (1-1/2" Hole on 21')
1-1/2" x 2" x 30" On-edge Shanks with Shear Bolt Protection, 20" Shank Spacing
5/16" x 26" Hard-faced Bottom Sweeps
Warning Light Kit, Complete with Wiring to Tractor
See Previous Page for Standard Tires

MODEL NO.	TILLAGE WIDTH	NO. OF SHANKS	TRANSPORT HEIGHT	TRANSPORT WIDTH	WING FOLD POSITION
SF3030-21	21’	13	10’ 8"	14’ 5"	1 - 1
SF3030-25	25’	15	12’ 4"	14’ 5"	1 - 1
SF3040-28	28’	17	10’ 8"	21’ 2"	1 - 1
SF3040-32	32’	19	12’ 4"	21’ 2"	1 - 1
SF3050-35	35’	21	12’ 8"	21’ 3"	2 - 1
SF3060-42	42’	25	13’	22’ 8"	2 - 2
SF3070-49	49’	29	15’ 6"	24’	3 - 2

3000 SERIES FALLOW-KING

These prices reflect the standard configuration. If items other than those listed in the standard configuration are ordered, then the quoted price below will change.

For Quotation Purposes Only – Please Order Items from the Groups Below

MODEL NUMBER		EST. WEIGHT	LIST PRICE
SF3030-21	3030-21 Fallow-King with 13 shanks	5944	26,050.00
SF3030-25	3030-25 Fallow-King with 15 shanks	6160	28,164.00
SF3040-28	3040-28 Fallow-King with 17 shanks	8044	37,173.00
SF3040-32	3040-32 Fallow-King with 19 shanks	8274	39,287.00
SF3050-35	3050-35 Fallow-King with 21 shanks	9759	43,797.00
SF3060-42	3060-42 Fallow-King with 25 shanks	11874	51,621.00
SF3070-49	3070-49 Fallow-King with 29 shanks	13650	60,665.00

ORDER CODE	DESCRIPTION	APPROX. WEIGHT (LBS)	LIST PRICE
	Select One Order Code from Each Group, 01 through 05.		
Group 01	**Base Machine**		
SF3030-21	30302101, Three Section, 21' Fallow-King	5944	21,867.00
SF3030-25	30302101, Three Section, 25' Fallow-King	5944	21,867.00
SF3040-28	30402801, Four Section, 28' Fallow-King	8044	31,750.00
SF3040-32	30402801, Four Section, 32' Fallow-King	8044	31,750.00
SF3050-35	30503501, Five Section, 35' Fallow-King	9759	37,134.00
SF3060-42	30604201, Six Section, 42' Fallow-King	11874	43,718.00
SF3070-49	30704901, Seven Section, 49' Fallow-King	13650	51,522.00
Group 02	**Shanks** **Order Quantity Indicated Above from Quotation Section**		
5556RS	Rigid Shear Bolt Mount Shank (1-1/2" x 2" x 30")	41	226.00
Group 03	**Sweeps** **Order One per Shank**		
1400055S	26" Hard-faced Sweep, Straight Wing	16	84.00
1400165S	32" Hard-faced Sweep, Straight Wing, 5/16" Thick.	19	100.00
Group 04	**Extension Kit** **For SF3030-25 and SF3040-32**		
12900321RS	Extension Kit (includes 2 Shanks) (Required on 3030-25 and 3040-32)	184	1,494.00
Group 05	**Hitches**		
5334RS	Single Lip Hitch with 1-1/2" Pin Hole (21')	26	153.00
4781RS	Single Lip Hitch with 2" Pin Hole (25', 28', 32', 35', 42', 49')	29	153.00
7500103RS	Double Lip Hitch with 1-9/16" Pin Hole (21', 28', 32', and 35')	20	153.00

3000 SERIES FALLOW-KING

ORDER CODE	DESCRIPTION	APPROX. WEIGHT (LBS)	LIST PRICE
OPTIONAL EQUIPMENT - For Current Machines ONLY			
Rear Tow Hitch for 3 Section			
7462RS	Rear Tow Hitch with Ball Joint	414	1,966.00
7461RS	Rear Tow Hitch with Hitch Slide and Ball Joint	435	2,180.00
Rear Tow Hitch for 4 and 6 Section			
5686RS	Rear Tow Hitch with Ball Joint	345	1,490.00
5687RS	Rear Tow Hitch with Hitch Slide and Ball Joint	365	1,703.00
Rear Tow Hitch for 5 and 7 Section			
6058RS	Rear Tow Hitch with Ball Joint	397	2,002.00
6057RS	Rear Tow Hitch with Hitch Slide and Ball Joint	405	2,212.00
17000636BS	Standard Rolling Treader Extension Kit (Converts 28' to 32')	125	1,051.00
16000040RS	Rigid Coulters for SF3030-21	1250	7,440.00
16000047RS	Rigid Coulters for SF3030-25	1425	8,577.00
16000042RS	Rigid Coulters for SF3040-28	1778	9,649.00
16000043RS	Rigid Coulters for SF3040-32	1985	10,994.00
16000044RS	Rigid Coulters for SF3050-35	2085	11,095.00
16000045RS	Rigid Coulters for SF3060-42	2328	13,432.00
16000046RS	Rigid Coulters for SF3070-49	2575	14,911.00
17000545RS	Standard Rolling Treader for SF3030-21	1700	9,634.00
17001210RS	Standard Rolling Treader for SF3030-25	1780	10,568.00
17000528RS	Standard Rolling Treader for SF3040-28	1992	11,038.00
17000691RS	Standard Rolling Treader for SF3040-32	2080	11,526.00
17000527RS	Standard Rolling Treader for SF3050-35	2586	14,960.00
17000529RS	Standard Rolling Treader for SF3060-42	2988	16,807.00
17000530RS	Standard Rolling Treader for SF3070-49	3582	20,044.00
12000657BS	Stripper Kit for Rolling Treaders for SF3030-21	229	1,292.00
12000715BS	Stripper Kit for Rolling Treaders for SF3030-25	232	1,327.00
12000658BS	Stripper Kit for Rolling Treaders for SF3040-28	314	1,704.00
12000711BS	Stripper Kit for Rolling Treaders for SF3040-32	339	1,866.00
12000654BS	Stripper Kit for Rolling Treaders for SF3050-35	387	2,140.00
12000655BS	Stripper Kit for Rolling Treaders for SF3060-42	471	2,596.00
12000656BS	Stripper Kit for Rolling Treaders for SF3070-49	544	2,984.00
17001405RS	Three Row Coil Tine Harrow for SF3030-21	847	4,093.00
17001406RS	Three Row Coil Tine Harrow for SF3030-25	883	4,254.00
17001407RS	Three Row Coil Tine Harrow for SF3040-28	1096	5,329.00
17001408RS	Three Row Coil Tine Harrow for SF3040-32	1146	5,470.00
17001409RS	Three Row Coil Tine Harrow for SF3050-35	1370	6,558.00
17001410RS	Three Row Coil Tine Harrow for SF3060-42	1626	7,799.00
17001411RS	Three Row Coil Tine Harrow for SF3070-49	1881	8,930.00

Mississippi State Contract Discount: 5%

3300 SERIES SUNFLOWER BLADE PLOWS

F.O.B. Beloit, KS

STANDARD CONFIGURATION

Coulters, Frame Hinges and Lift System Pivot on UHMW Polymer, Zero Maintenance
4 New 12 Ply, 12.5L x 15 Tubeless Tires on 40' Wings
6 New 12 Ply, 12.5L x 15 Tubeless Tires on 52' Wings
4 New 12.5L x 15 (GY FI) Load Range F Tubeless Tires on Center
4 15" x 10" Six Bolt Wheels and Hubs with Zerks, 2" Spindles and Triple Lip Seals 40'
6 15" x 10" Six Bolt Wheels and Hubs with Zerks, 2" Spindles and Triple Lip Seals 52'
4 15" x 10" Eight Bolt Wheels and Hubs with Zerks, 2-3/4" Spindles and Triple Lip Seals
4 4" x 10" Lift Cylinders, 1/2" Hydraulic Hose
2 4" x 36" Fold Cylinders, 1/2" Hydraulic Hose – 40'
4 4" x 24" Fold Cylinders, 1/2" Hydraulic Hose – 52'
1 Tongue Jack
1 Cast Single Lip Hitch with 2" Pin Hole (4781RS)
Rigid Coulter Assemblies, 22" Plain Blades, five Bolt Hubs and Triple Lip Seals
75º Hard-faced Blades, either Top or Bottom Hard-facing (specify)
Regular 75º Welded Standards, 1-1/4" Upright
Warning Light Kit, Complete with Wiring to Tractor
SMV Emblem

These prices reflect the standard configuration. If items other than those listed in the standard configuration are ordered, then the quoted price below will change.

For Quotation Purposes Only – Please Order Items from the Groups on the Next Pages

MODEL NO.	CUTTING WIDTH	NO. OF BLADES AND SIZE	EST. WT.	LIST PRICE
3372-40	40'	7 – 6'	12718	57,610.00
3392-52	52'	9 – 6'	15280	78,659.00

3300 SERIES SUNFLOWER BLADE PLOWS

ORDER CODE	DESCRIPTION	APPROX. WEIGHT (LBS)	LIST PRICE

Select One Order Code from Each Group, 01 through 06.

Group 01 Base Machine

SF3372-40	33724000, 40’ Sunflower Blade Plow	11163	43,171.00
SF3392-52	33925200, 52’ Sunflower Blade Plow	9465	60,431.00

Group 02 Blade Standards Order Qty 7 on 40’ and Qty 9 on 52’

15000061RS	Regular 75º Welded Standards, 1-1/4" Upright, 6’	234	950.00

Group 03 Blades

SF3372-40

1400080S	Set of Seven, 6’ Blades, Top Hard-faced	385	1,634.00
1400081S	Set of Seven, 6’ Blades, Bottom Hard-faced	385	1,634.00

SF3392-52

1400083S	Set of Nine, 6’ Blades, Top Hard-faced	495	2,103.00
1400084S	Set of Nine, 6’ Blades, Bottom Hard-faced	495	2,103.00

Group 04 Rigid Coulters 22” Blades, Five Bolt Hubs and Triple Lip Seals

16000049S	Set of Seven, Rigid Coulter Assemblies for SF3372-40	441	2,398.00
16000048S	Set of Nine, Rigid Coulter Assemblies for SF3392-52	567	3,084.00

Group 05 Tires

MODEL	ORDER QUANTITY	
	CENTER	WINGS
SF3372-40	(4) 5579YS	(4) 3588S
SF3392-52	(4) 5579YS	(6) 3588S

3588S	(1) New 12 Ply, 12.5L x 15 Tubeless Tire for Wings	80	367.00
5579YS	(1) New 12.5L x 15 (GY FI) Load Range F Tubeless Tire for Centers	110	534.00

Group 06 Hitches

4781RS	Cast Single Lip Hitch with 2” Pin Hole	29	153.00
7500103RS	Double Lip Hitch with 1-9/16" Pin Hole	20	153.00

3300 SERIES SUNFLOWER BLADE PLOWS

ORDER CODE	DESCRIPTION	APPROX. WEIGHT (LBS)	LIST PRICE

OPTIONAL EQUIPMENT - For Current Machines ONLY

9545RS	Rear Tow Hitch with Ball Joint	560	2,302.00
9546RS	Rear Tow Hitch with Hitch Slide and Ball Joint	560	2,516.00

Rear Back Stand (Included with Rolling Treader)

9353RS	Rear Back Stand for SF3372-40	80	602.00
9273RS	Rear Back Stand for SF3392-52	70	410.00

STANDARD ROLLING TREADERS FOR 3300 SERIES BLADE PLOWS

7/16" x 1-1/2" High Carbon Steel Teeth, 18" Diameter and 8 Teeth per Row
1-1/2" Square Gang Shafts with Triple Sealed Greaseable Bearings
Universal Modular Mounts with Hardware (Includes Rear Back Stand Kit)

MODEL	RECOMMENDED GANGS
SF3372-40	4 - RT12-55R / 3 - RT12-55L
SF3392-52	5 - RT12-55R / 4 - RT12-55L

17001504RS	SF3372-40	3219	18,172.00
17001501RS	SF3392-52	4093	23,363.00

CONSERVATION ROLLING TREADERS WITH HARD-FACED TEETH

3/8" x 1-1/2" High Carbon Steel Teeth, Hard-faced, 20-1/2" Diameter and 7 Teeth per Row
1-1/2" Square Gang Shafts with Triple Sealed Greaseable Bearings Square Bore
All Required Hardware and Mounting Brackets (Includes Rear Back Stand Kit)

MODEL	RECOMMENDED GANGS
SF3372-40	4 - RT12-55R / 3 - RT12-55L
SF3392-52	5 - RT12-55R / 4 - RT12-55L

17001506RS	SF3372-40	3219	23,186.00
17001503RS	SF3392-52	4093	27,142.00

STRIPPER KITS FOR 3300 SERIES BLADE PLOW ROLLING TREADERS

All Mounting Hardware and Components

12000668BS	SF3372-40	337	1,642.00
12000670BS	SF3392-52	433	2,023.00

3300 SERIES SUNFLOWER BLADE PLOWS

ORDER CODE	DESCRIPTION	APPROX. WEIGHT (LBS)	LIST PRICE

STANDARD ROLLING TREADERS FOR 3300 SERIES BLADE PLOWS

7/16" x 1-1/2" High Carbon Steel Teeth, 18" Diameter and 8 Teeth per Row
1-1/2" Square Gang Shafts with Triple Sealed Greaseable Bearings
Universal Modular Mounts with Hardware (Includes Rear Back Stand Kit)

ATTACHMENTS NUMBER	ADAPTS TO	RECOMMENDED GANG
17000391RS	SF3351-23	3 - RSRT10-45R / 2 - RT-45L198
17000394RS	SF3371-33	4 - RT10-45R / 3 - RT10-45L

17000391RS	SF3351-23	1985	11,944.00
17000394RS	SF3371-33	2779	16,694.00

STRIPPER KITS FOR 3300 SERIES BLADE PLOW ROLLING TREADERS

All Mounting Hardware and Components

12000664BS	SF3351-23	212	863.00
12000665BS	SF3351-28	241	1,064.00

Mississippi State Contract Discount: 5%

3600 SERIES SUNFLOWER/RICHARDSON BLADE PLOWS

F.O.B. Beloit, KS

STANDARD CONFIGURATION

Coulters, Frame Hinges and Lift system Pivot on UHMW Polymer, Maintenance Free
Rigid Coulter Assemblies, 22" Plain Blades, Five Bolt Hubs, and Triple Lip Seals
2" Spindles, Six Bolt Hubs with Zerks and Triple Lip Seals (6 and 7 Section)
2-1/8" Spindles, Six Bolt Hubs with Zerks and Double Lip Seals (9 and 11 Section Plows)
75 Hard-faced Blades, Choice of Top or Bottom Hard-facing (specify)
Blade Sizes per Model:

3662 – (2) 5’, (1) 5-1/4’, (3) 5-1/2’
3672 – (3) 5’, (4) 5-1/2’
3692 – (3) 5’, (2) 5-1/4’, (4) 5-1/2’
3612 – (3) 5’, (4) 5-1/4’, (4) 5-1/2’

75 Welded Standards, 1-1/4" Upright
Plumbing to Front of Plow
Tongue Jack, All Models
Single Lip Hitch with 2-1/4" Pin Hole
Warning Light Kit, Complete with Wiring to Tractor
SMV Emblem

These prices reflect the standard configuration. If items other than those listed in the standard configuration are ordered, then the quoted price below will change.

For Quotation Purposes Only – Please Order Items from the Groups on the Next Pages

MODEL NO.	WIDTH OF CUT	TYPE OF FOLD	NO. OF BLADES	EST. WT.	LIST PRICE
SF3662-30	30’ 6"	2 - 2	6	9294	44,503.00
SF3672-35	35’ 6"	2 - 2	7	10557	49,706.00
SF3692-45	45’ 6"	3 - 3	9	16511	75,824.00
SF3612-55	55’ 6"	4 - 4	11	21058	92,417.00

3600 SERIES SUNFLOWER/RICHARDSON BLADE PLOWS

ORDER CODE	DESCRIPTION	APPROX. WEIGHT (LBS)	LIST PRICE

Select One Order Code from Each Group, 01 through 06.

Group 01 Base Machine

SF3662-30	36623000, 30' Sunflower/Richardson Blade Plow	6181	33,303.00
SF3672-35	36723500, 35' Sunflower/Richardson Blade Plow	6954	36,724.00
SF3692-45	36924500, 45' Sunflower/Richardson Blade Plow	11725	58,542.00
SF3612-55	36125500, 55' Sunflower/Richardson Blade Plow	15256	71,568.00

Group 02 Blade Standards Regular 75º Welded Standards, 1¼" Upright

15000149RS	Regular 75º Welded Standards for SF3662-30.	1319	5,606.00
15000151RS	Regular 75º Welded Standards for SF3672-35.	1533	6,540.00
15000153RS	Regular 75º Welded Standards for SF3692-45.	1978	8,407.00
15000155RS	Regular 75º Welded Standards for SF3612-55.	2424	10,277.00

Group 03 Blades

MODEL	TOTAL QUANTITY OF BLADES	QTY AND BLADE SIZES
SF3662-30	6	Two 5', One 5 ¼', Three 5 ½'
SF3672-35	7	Three 5', Four 5 ½'
SF3692-45	9	Three 5', Two 5 ¼', Four 5 ½'
SF3612-55	11	Three 5', Four 5 ¼', Four 5 ½'

1400149S	Set of Top Hard-faced for SF3662-30	306	1,169.00
1400150S	Set of Bottom Hard-faced for SF3662-30.	306	1,169.00
1400152S	Set of Top Hard-faced for SF3672-35	351	1,362.00
1400153S	Set of Bottom Hard-faced for SF3672-35.	351	1,362.00
1400155S	Set of Top Hard-faced SF3692-45	459	1,753.00
1400156S	Set of Bottom Hard-faced SF3692-45	459	1,753.00
1400158S	Set of Top Hard-faced for SF3612-55	567	2,140.00
1400159S	Set of Bottom Hard-faced for SF3612-55.	567	2,140.00

Group 04 Rigid Coulters Order One per Blade

16000052RS	Rigid Coulter Assemblies	162	313.00
	22" Blades, Five Bolt Hubs and Triple Lip Seals		

Mississippi State Contract Discount: 5%

3600 SERIES SUNFLOWER/RICHARDSON BLADE PLOWS

ORDER CODE	DESCRIPTION	APPROX. WEIGHT (LBS)	LIST PRICE

Select One Order Code from Each Group, 01 through 06.

Group 05 Tires

MODEL	ORDER QUANTITY	
	CENTERS	WINGS
SF3662-30	(3) 6190YS	(4) 6190YS
SF3672-35	(4) 6190YS	(4) 6190YS
SF3692-45	(6) 3587YS	(6) 6190YS
SF3612-55	(8) 3587YS	(6) 6190YS

6190YS	(1) New 12 Ply, 11 L x 15 Tubeless Tire, 8 Bolt Wheel	69	342.00
3587YS	(1) New 12 Ply, 11 L x 15 Tubeless Tire, 8 Bolt Wheel . . . . For use on SF3692-45 and SF3612-55 Centers	74	350.00

Group 06 Hitches

9689RS	Cast Single Lip Hitch with 2-1/4" Pin Hole	33	153.00
9656RS	Double Lip Hitch with 1-9/16" Pin Hole . . . . . . For use on SF3662-30 and SF3672-35 Only	17	153.00

OPTIONAL EQUIPMENT - For Current Machines ONLY

9594RS	Rear Jack Mount Kit (Included with Rolling Treader).	48	244.00
7500031RS	NH3 Reacher Hitch with Parts Box	278	1,809.00

3600 SERIES SUNFLOWER/RICHARDSON BLADE PLOWS

MODEL	RECOMMENDED GANGS For Std Rolling Treaders and Conservation Rolling Treaders
SF3662-30	1 - RT10-45R / 1 - RT10-45L 2 - RT11-50R / 2 - RT11-50L
SF3672-35	2 - RT10-45R / 1 - RT10-45L 2 - RT11-50R / 2 - RT11-50L
SF3692-45	2 - RT10-45R / 2 - RT10-45L 3 - RT11-50R / 2 - RT11-50L
SF3612-55	3 - RT10-45R / 2 - RT10-45L 3 - RT11-50R / 3 - RT11-50L

ORDER CODE	DESCRIPTION	APPROX. WEIGHT (LBS)	LIST PRICE

STANDARD ROLLING TREADERS FOR 3600 SERIES BLADE PLOWS

7/16" x 1-1/2" High Carbon Steel Teeth, 18" Diameter and 8 Teeth per Row
1-1/2" Square Gang Shafts with Triple Sealed Greaseable Bearings
All Required Hardware and Mounting Brackets (Includes Rear Back Stand Kit)

17000463RS	SF3662-30 (2 - 2 Type of Fold)	2462	14,365.00
17000464RS	SF3672-35 (2 - 2 Type of Fold)	2859	16,758.00
17000465RS	SF3692-45 (3 - 3 Type of Fold)	3673	21,547.00
17000466RS	SF3612-55 (4 - 4 Type of Fold)	4487	26,336.00

CONSERVATION ROLLING TREADERS WITH HARD-FACED TEETH

3/8" x 1-1/2" High Carbon Steel Teeth, Hard-faced, 20-1/2" Diameter and 7 Teeth per Row
1-1/2" Square Gang Shafts with Triple Sealed Greaseable Bearings
All Required Hardware and Mounting Brackets (Includes Rear Back Stand Kit)

17001197RS	SF3662-30 (2 - 2 Type of Fold)	2462	16,884.00
17001198RS	SF3672-35 (2 - 2 Type of Fold)	2859	19,698.00
17001199RS	SF3692-45 (3 - 3 Type of Fold)	3673	25,328.00
17001200RS	SF3612-55 (4 - 4 Type of Fold)	4487	30,955.00

STRIPPER KITS FOR 3600 SERIES BLADE PLOW ROLLING TREADERS

All Mounting Hardware and Components

12000675BS	SF 3662-30	267	1,530.00
12000677BS	SF 3672-35	309	1,766.00
12000679BS	SF 3692-45	397	2,233.00
12000683BS	SF 3612-55	485	2,723.00

SUNFLOWER

FACTORY OR DEALERSHIP ASSEMBLY AMOUNTS ON 4000 SERIES

(DISCOUNTS DO NOT APPLY)

The factory or dealership set-up amounts will be charged for machines set-up by Sunflower. Set-up amounts are the same whether machines are shipped via our truck (gangs off wings, etc.) or set-up completely and picked up by dealer's truck. Factory assembly charge includes hydraulic hose, hydraulic oil, and tips (hydraulic system is charged). Dealer location assembly charge includes hydraulic hose, and tips. (Hydraulic oil is not included) See note below.

MODEL NUMBER	FACTORY ORDER CODE	FACTORY SET-UP RATES	DEALER LOCATION ORDER CODE	DEALER LOCATION SET-UP RATE
SF4213-07 (manual reset or shear bolt) ♦	SET0199S	920.00	SET0199DS	964.00
SF4213-09 (manual reset or shear bolt) ♦	SET0200S	967.00	SET0200DS	1,013.00
SF4213-11 (manual reset or shear bolt) ♦	SET0201S	1,091.00	SET0201DS	1,143.00
SF4213-13 (manual reset or shear bolt) ♦	SET0202S	1,147.00	SET0202DS	1,201.00
SF4213-15 (manual reset or shear bolt) ♦	SET0203S	1,212.00	SET0203DS	1,269.00
SF4233-17 (manual reset or shear bolt) ♦	SET0213S	1,705.00	SET0213DS	1,786.00
SF4233-19 (manual reset or shear bolt) ♦	SET0214S	1,764.00	SET0214DS	1,848.00
SF4233-21 (manual reset or shear bolt) ♦	SET0215S	1,875.00	SET0215DS	1,965.00
SF4233-23 (manual reset or shear bolt) ♦	SET0216S	1,944.00	SET0216DS	2,036.00
SF4511-09 (manual reset or shear bolt)	SET0117S	1,516.00	SET0117DS	1,588.00
SF4511-11 (manual reset or shear bolt)	SET0118S	1,603.00	SET0118DS	1,680.00
SF4511-13 (manual reset or shear bolt)	SET0119S	1,743.00	SET0119DS	1,826.00
SF4511-15 (manual reset or shear bolt)	SET0120S	1,875.00	SET0120DS	1,965.00
SF4530-19 (manual reset or shear bolt)	SET0121S	2,349.00	SET0121DS	2,461.00
SF4213-07 (auto reset)	SET0204S	1,091.00	SET0204DS	1,143.00
SF4213-09 (auto reset)	SET0205S	1,175.00	SET0205DS	1,231.00
SF4213-11 (auto reset)	SET0206S	1,299.00	SET0206DS	1,361.00
SF4213-13 (auto reset)	SET0207S	1,384.00	SET0207DS	1,450.00
SF4213-15 (auto reset)	SET0208S	1,458.00	SET0208DS	1,528.00
SF4233-17 (auto reset)	SET0209S	1,961.00	SET0209DS	2,055.00
SF4233-19 (auto reset)	SET0210S	2,048.00	SET0210DS	2,145.00
SF4233-21 (auto reset)	SET0211S	2,217.00	SET0211DS	2,322.00
SF4233-23 (auto reset)	SET0212S	2,294.00	SET0212DS	2,404.00
SF4412-05 (auto reset)	SET0100S	1,705.00	SET0100DS	1,786.00
SF4412-07 (auto reset)	SET0101S	1,857.00	SET0101DS	1,946.00
SF4511-09 (auto reset)	SET0103S	1,705.00	SET0103DS	1,786.00
SF4511-11 (auto reset)	SET0104S	1,849.00	SET0104DS	1,937.00
SF4511-13 (auto reset)	SET0105S	2,010.00	SET0105DS	2,105.00
SF4511-15 (auto reset)	SET0106S	2,180.00	SET0106DS	2,284.00
SF4530-19 (auto reset)	SET0107S	2,728.00	SET0107DS	2,858.00
Coil Tine Harrow	SET0033S	22.00 per foot	SET0033DS	23.00 per foot
Rolling Treaders	SET0123S	53.00 per gang	SET0123DS	55.00 per gang
Chopper Reels	SET0124S	9.00 per foot	SET0124DS	10.00 per foot
Five Row Spike Drag	SET0125S	18.00 per foot	SET0125DS	20.00 per foot

SUNFLOWER RECOMMENDS THESE SET-UP FIGURES BE USED BY DEALERS WHEN TRANSFERRING EQUIPMENT

♦ *Frames are over-width (9' 6") and will require special handling and/or permits.*

Dealership Assembly requirements:

1. The dealership assembly service must be ordered separately from the implement. (initiates scheduling of service) Please order dealership assembly service from the field installed options tab in e-ordering.
2. Include in the dealership assembly order request the order and/or invoice number of the implement to be assembled.
3. Dealer supplies hydraulic oil (oil is not included).
4. Dealer supplies a fork lift of sufficient size to be used by AGCO's assembly crew.

4213 SERIES RIGID COULTER CHISEL

F.O.B. Beloit, KS

7 THROUGH 15 SHANK MODEL

STANDARD CONFIGURATION

4 New 12 Ply, 11L x 15 Tubeless Tires on 7 and 9 Shank Machines
4 New 12 Ply, 12.5L x 15 Tubeless Tires on 11-15 Shank Machines
4 15" x 10" Six Bolt Wheels and Hubs with 2" Slip-in Spindles and Triple Lip Seals
2 Walking Beams with Greaseable Tapered Roller Bearings
1 Double Lip Hitch with 1-1/4" Pin Hole (7 and 9 shank) (7500112S)
1 Cast Single Lip Hitch with 2" Oblong Pin Hole (11, 13 and 15 shank) (7500114S)
1 4" x 16" Lift Cylinder with Hoses and Hardware
1 Single Point Front Mounted Hydraulic Depth Control
1 Hydraulic Coulter Gang Adjustment with 2 Rephasing Cylinders, Hoses, Hardware and Depth Gauge
1 Tongue Jack
Maintenance Free Lift Axles using UHMW Polymer
15" Shank Spacing
1-3/4" Coulter Gang Shafts with Triple Sealed Greaseable Bearings
C-Flex Coulter Gang Hangers
Channel Iron Trash Bars Between Coulter Blades
20" Plain Coulter Blades 1/4" Thick on 7-1/2" Centers
4" One Piece Twisted Shovels, 1/2" Thick
Rear Back Stand (Less Jack)
Safety Chain and Light Kit, Complete with Wiring to Tractor
SMV Emblem

MODEL	4213-7	4213-9	4213-11	4213-13	4213-15
NUMBER OF SECTIONS	1	1	1	1	1
TRANSPORT WIDTH	9’ 8”	10’ 11”	14’ 3”	16’ 2”	18’ 8”
COULTER BLADE SPACING	7 ½”	7 ½”	7 ½”	7 ½”	7 ½”
NUMBER OF COULTER GANGS	2	2	2	2	4
NUMBER OF BEARINGS	4	4	6	6	8

These prices reflect the standard configuration. If items other than those listed in the standard configuration are ordered, then the quoted price below will change.

For Quotation Purposes Only – Please Order Items from the Groups on the Next Pages

MODEL NUMBER	CUTTING WIDTH	NUMBER OF SHANKS	NUMBER OF COULTERS	EST WTS	20" ¼" THICK BLADES
RIGID SHEAR BOLT MOUNT SHANKS (1½" x 2" x 30" ON-EDGE)					
SF4213-07	8’ 9"	7	14	6068	24,047.00
SF4213-09	11’ 3"	9	18	6632	26,262.00
SF4213-11	13’ 9"	11	22	7602	30,604.00
SF4213-13	16’ 3"	13	26	8162	32,869.00
SF4213-15	18’ 9"	15	30	9209	36,243.00
AUTO RESET MOUNT SHANKS (1¼" x 2½" x 30" ON-EDGE)					
SF4213-07	8’ 9"	7	14	6760	28,814.00
SF4213-09	11’ 3"	9	18	7522	32,391.00
SF4213-11	13’ 9"	11	22	8690	38,095.00
SF4213-13	16’ 3"	13	26	9448	41,722.00
SF4213-15	18’ 9"	15	30	10692	46,458.00

Mississippi State Contract Discount: 5%

4213 SERIES RIGID COULTER CHISEL

ORDER CODE	DESCRIPTION	APPROX. WEIGHT (LBS)	LIST PRICE
	Select One Order Code from Each Group, 01 through 06.		
Group 01	**Base Machine**		
SF4213-07	42130700, 7 Shank Rigid Coulter Chisel	4417	15,876.00
SF4213-09	42130900, 9 Shank Rigid Coulter Chisel	4552	16,661.00
SF4213-11	42131100, 11 Shank Rigid Coulter Chisel	5123	19,045.00
SF4213-13	42131300, 13 Shank Rigid Coulter Chisel	5253	19,804.00
SF4213-15	42131500, 15 Shank Rigid Coulter Chisel	5973	21,212.00
Group 02	**Coulter Gangs 20" PLAIN COULTER BLADES ON 7½" CENTERS**		
SF4213-07			
12301550S	20" 4 Gauge, Blades	882	4,185.00
SF4213-09			
12301551S	20" 4 Gauge, Blades	1174	4,919.00
SF4213-11			
12301552S	20" 4 Gauge, Blades	1430	6,113.00
SF4213-13			
12301553S	20" 4 Gauge, Blades	1722	6,923.00
SF4213-15			
12301554S	20" 4 Gauge, Blades	1910	8,193.00
Group 03	**Shanks Order Quantity Indicated Above (one per shank)**		
9503RS	Shank Assy, Rigid Shear Bolt, 1-1/2" x 2" x 30" on Edge	56	302.00
12574RS	Shank Assy, Auto Reset, 1-1/4" x 2-1/2" x 30" on Edge	155	983.00

4213 SERIES RIGID COULTER CHISEL

ORDER CODE	DESCRIPTION	APPROX. WEIGHT (LBS)	LIST PRICE

Select One Order Code from Each Group, 01 through 06.

Group 04 Shovels / Points

MODEL	ORDER QUANTITY (LEFT & RIGHT)		ORDER QTY
	RIGHT TWISTED	LEFT TWISTED	POINTS
SF4213-07	4	3	7
SF4213-09	5	4	9
SF4213-11	6	5	11
SF4213-13	7	6	13
SF4213-15	8	7	15

Right Twisted

1400041S	1/2" x 4" x 22" One Piece Twisted Shovel	13	46.00
1400005S	1/2" x 3" x 22" One Piece Twisted Shovel	9	46.00

Left Twisted

1400042S	1/2" x 4" x 22" One Piece Twisted Shovel	13	46.00
1400006S	1/2" x 3" x 22" One Piece Twisted Shovel	9	46.00

Points

1400163S	1” x 2" x 18" Heavy Duty Reversible Point	9	36.00

Group 05 Tires Order Quantity of 4

7 & 9 shanks order 3587YS, all others order 3588S

3587YS	(1) New 11L x 15 Tubeless Tire, 12 Ply . . . . . 6 Bolt Wheel (15" x 10")		350.00
3588S	(1) New 12.5L Tubeless Tire, 12 Ply, 6 Bolt Wheel (15" x 10") .	80	367.00

Group 06 Hitches

7 & 9 Shank Models

7500112S	Double Lip Hitch with 1-1/4" Pin Hole	20	150.00
7500111S	Double Lip Hitch with 1-13/16" Pin Hole	20	150.00
7500113S	Cast Single Lip Hitch with 1-1/2” Pin Hole	20	150.00

11, 13, 15 Shank Models

7500114S	Cast Single Lip Hitch with 2” Pin Hole	29	150.00
7500111S	Double Lip Hitch with 1-13/16" Pin Hole	20	150.00

OPTIONAL EQUIPMENT - For Current Machines ONLY

5945RS	Offset Shank Extension Kit (To Stagger Rear Row of Shanks) . . (Order 2 on 7 and 9 shank models. Order 3 on 11 to 15 shank models.) Recommended In Heavy Residue Conditions	49	292.00
18663BS	Gang Wrench, 2 3/4"	20	89.00

4213 SERIES RIGID COULTER CHISEL

ORDER CODE	DESCRIPTION	APPROX. WEIGHT (LBS)	LIST PRICE

FIVE ROW SPIKE DRAGS

All Required Hardware and Mounting Brackets
Five Rows of 3/4" x 11" Square Spikes on 9" Centers, 3" Spacing Overall

MODEL	SECTION SIZE	ARMS
SF4213-07	9 ½'	3
SF4213-09	12 ½'	3
SF4213-11	6 ½' 8'	4
SF4213-13	8' 8'	4
SF4213-15	9 ½' 9 ½'	4

17001680RS	SF4213-07	673	2,615.00
17001681RS	SF4213-09	783	2,928.00
17001682RS	SF4213-11	966	3,591.00
17001683RS	SF4213-13	1021	3,703.00
17001684RS	SF4213-15	1329	4,706.00

The Following Arm Extensions Must Be Ordered with Five Row Spike Drags on SF4213's Equipped with Auto-Reset Shanks

7045RS	Harrow Arm Extension (Order One per Arm)	22	76.00

THREE ROW COIL TINE HARROW - HEAVY DUTY

Spring Loaded Parallel Drag Arms with all Required Hardware and Mounting Brackets
Three Rows of 5/8" x 30" Coil Tines on 12" Centers, 4" Spacing Overall, with Angle Adjustment and Backup Protection
13" Spacing

MODEL	SECTION SIZE	ARMS
SF4213-07	10'	2
SF4213-09	6' 6'	4
SF4213-11	8' 8'	4
SF4213-13	10' 8'	4
SF4213-15	10' 10'	4

17001737RS	SF4213-07	952	3,382.00
17001738RS	SF4213-09	1135	5,088.00
17001739RS	SF4213-11	1315	5,676.00
17001740RS	SF4213-13	1540	6,029.00
17001741RS	SF4213-15	1615	6,676.00

The Following Arm Extensions Must Be Ordered with 3 Row Coil Tine Harrow on SF4213's Equipped with Auto-Reset Shanks and Offset Shank Mount Kit (5945RS). These Arm Extensions are not required with Rigid Shear Bolt Shanks and Offset Shank Mount.

16562RS	Harrow Arm Extension for 7 shank (Order One per Attachment)	146.00
16563RS	Harrow Arm Extension for 9 to 15 shank (Order One per Attachment)	301.00

4213 SERIES RIGID COULTER CHISEL ATTACHMENTS

ORDER CODE	DESCRIPTION	APPROX. WEIGHT (LBS)	LIST PRICE

REAR CHOPPER REELS

16" Diameter Reel with 15" Offset Blades
Two Trunnion Bearings, Triple Sealed and Greaseable, per Reel
All Mounting Arms and Hardware

MODEL	SECTION SIZE	ARMS
SF4213-07	60" 75"	4
SF4213-09	75" 75"	4
SF4213-11	60" 60" 60"	6
SF4213-13	60" 90" 60"	6
SF4213-15	75" 90" 75"	6

17001675RS	SF4213-07	1054	5,244.00
17001676RS	SF4213-09	1146	5,725.00
17001677RS	SF4213-11	1536	7,716.00
17001678RS	SF4213-13	1860	8,959.00
17001679RS	SF4213-15	1975	9,353.00

ROLLING TREADERS - (Not Recommended in Rocky Conditions)

7/16" x 1-1/2" High Carbon Steel Teeth, 18" Diameter and 8 Teeth per Row
1-1/2" Square Gang Shafts with Triple Sealed Greaseable Bearings, Square Bore
Universal Modular Mounts with Hardware

MODEL	RECOMMENDED GANGS
SF4213-07	1 - RT10-45R / 1 - RT10-45L
SF4213-09	1 - RT12-55R / 1 - RT12-55L
SF4213-11	1 - RT15-70R / 1 - RT15-70L
SF4213-13	1 - RT8-35R / 1 - RT8-35L 1 - RT10-45R / 1 - RT10-45L
SF4213-15	2 - RT10-45R / 2 - RT10-45L

17001670RS	SF4213-07	794	4,983.00
17001671RS	SF4213-09	1034	6,077.00
17001672RS	SF4213-11	1156	6,557.00
17001673RS	SF4213-13	1563	10,115.00
17001674RS	SF4213-15	1688	10,462.00

STRIPPER KITS FOR 4213 SERIES TRASH MULCHER ROLLING TREADERS

12000720BS	4213-07	85	510.00
12000721BS	4213-09	96	585.00
12000722BS	4213-11	157	869.00
12000723BS	4213-13	157	892.00
12000724BS	4213-15	169	974.00

SUNFLOWER

Mississippi State Contract Discount: 5%

4233 SERIES 3 SECTION FLEXIBLE COULTER CHISEL

F.O.B. Beloit, KS

STANDARD CONFIGURATION

4 New 12.5L x 15 (GY - FI) Load Range F, Tubeless Tires (Center) (5555YS)
4 New 12 Ply, 12.5L x 15 Tubeless Tires (Wings) (3588S)
4 15" x 10" Eight Bolt Wheels and Hubs with 2-1/4" Slip-in Spindles and Triple Lip Seals (Center)
4 15" x 10" Six Bolt Wheels and Hubs with 2" Slip-in Spindles and Triple Lip Seals (Wings)
4 Walking Beams with Greaseable Tapered Roller Bearings
1 Hydraulic Coulter Gang Adjustment with 4 Rephasing Cylinders, Hoses, and Hardware
2 4" x 24" Fold Cylinders with Hoses and Hardware (17 and 19 Shank Models)
4 4" x 24" Fold Cylinders with Hoses and Hardware (21 and 23 Shank Models)
1 Rephasing Lift System Consisting of two 4" x 16" and two 3-3/4" x 16" Hydraulic Cylinders with Hoses and Hardware
1 Single Point Front Mounted Hydraulic Depth Control
1 Tongue Jack
1 Cast Single Lip Hitch with 2" Oblong Hole
1 Rear Back Stand (Auto Reset Shank Models Only)
Maintenance Free 5-1/2" Lift Axle Using UHMW Polymer
15" Shank Spacing
1-3/4" Coulter Gang Shafts with Tripled Sealed Greaseable Trunnion Style Bearings
C-Flex Coulter Gang Hangers
Channel Iron Trash Bars Between Coulter Blades
20" Plain Coulter Blades 1/4" Thick on 7-1/2" Centers
4" One Piece Twisted Shovels, 1/2" Thick
Safety Chain and Warning Light Kit, Complete with Wiring to Tractor
SMV Emblem

MODEL	4233-17	4233-19	4233-21	4233-23
Number of Sections	3	3	3	3
Cutting Width	21' 3"	23' 9"	26' 3"	28' 9"
Transport Width	14' 6"	14' 6"	14' 6"	14' 6"
Transport Height	10' 3"	11' 7"	13' 1"	14'
Number of Shanks	17	19	21	23
Shank Spacing	15"	15"	15"	15"
No. of Coulter Gangs	4	4	4	4
Coulter Blade Spacing	7.5"	7.5"	7.5"	7.5"
Number of Bearings	8	10	10	12

These prices reflect the standard configuration. If items other than those listed in the standard configuration are ordered, then the quoted price below will change.

For Quotation Purposes Only – Please Order Items from the Groups on the Next Pages

MODEL NUMBER	CUTTING WIDTH	NUMBER OF SHANKS	NUMBER OF COULTERS	EST WTS	20" ¼" THICK BLADES
RIGID SHEAR BOLT MOUNT SHANKS (1½" x 2" x 30" ON-EDGE)					
SF4233-17	21' 3"	17	34	12804	55,095.00
SF4233-19	23' 9"	19	38	13410	58,366.00
SF4233-21	26' 3"	21	42	14364	62,480.00
SF4233-23	28' 9"	23	46	14770	65,118.00
AUTO RESET MOUNT SHANKS (1¼" x 2½" x 30" ON-EDGE)					
SF4233-17	21' 3"	17	34	14487	66,672.00
SF4233-19	23' 9"	19	38	15291	71,305.00
SF4233-21	26' 3"	21	42	16443	76,781.00
SF4233-23	28' 9"	23	46	17047	80,781.00

Auto Reset Shanks Feature Maximum Point Load Of 1,500 Lbs. And Maximum Vertical Trip Height Of 13".
These Shanks Are Recommended In Rock Or Hard Ground Conditions.

4233 SERIES 3 SECTION FLEXIBLE COULTER CHISEL

ORDER CODE	DESCRIPTION	APPROX. WEIGHT (LBS)	LIST PRICE

Select One Order Code from Each Group, 01 through 06.

Group 01 Base Machine

SF4233-17	42331700, 17 Shank Rigid 3 Section Trash Mulcher.	9370	36,182.00
SF4233-19	42331900, 19 Shank Rigid 3 Section Trash Mulcher.	9575	37,592.00
SF4233-21	42332100, 21 Shank Rigid 3 Section Trash Mulcher.	10099	40,221.00
SF4233-23	42332300, 23 Shank Rigid 3 Section Trash Mulcher.	9128	40,904.00

Group 02 Gangs 20" PLAIN COULTER BLADES ON 7½" CENTERS

SF4233-17

12301555S	20" 4 Gauge, C-Flex	2232	9,457.00

SF4233-19

12301556S	20" 4 Gauge, C-Flex	2495	10,622.00

SF4233-21

12301557S	20" 4 Gauge, C-Flex	2787	11,411.00

SF4233-23

12301558S	20" 4 Gauge, C-Flex	4026	12,670.00

Group 03 Shanks Order Quantity Indicated Above

9503RS	Shank Assy, Rigid Shear Bolt, 1-1/2" x 2" x 30" on Edge . . .	56	302.00
12574RS	Shank Assy, Auto Reset, 1-1/4" x 2-1/2" x 30" on Edge	155	983.00

Mississippi State Contract Discount: 5%

4233 SERIES 3 SECTION FLEXIBLE COULTER CHISEL

ORDER CODE	DESCRIPTION	APPROX. WEIGHT (LBS)	LIST PRICE

Select One Order Code from Each Group, 01 through 06.

Group 04 Shovels / Points

MODEL	ORDER QUANTITY (LEFT & RIGHT)		ORDER QTY
	RIGHT TWISTED	LEFT TWISTED	POINTS
SF4233-17	9	8	17
SF4233-19	10	9	19
SF4233-21	11	10	21
SF4233-23	12	11	23

Right Twisted

1400041S	1/2" x 4" x 22" One Piece Twisted Shovel	13	46.00
1400005S	1/2" x 3" x 22" One Piece Twisted Shovel	9	46.00

Left Twisted

1400042S	1/2" x 4" x 22" One Piece Twisted Shovel	13	46.00
1400006S	1/2" x 3" x 22" One Piece Twisted Shovel	9	46.00

Points

1400163S	1” x 2" x 18" Heavy Duty Reversible Point	9	36.00

Group 05 Tires, Wings – Must order 4

3588S	(1) New 12 Ply, 12.5L x 15 Tubeless Tire, 6 Bolt Wheel	80	367.00

Group 06 Tires, Centers – Must order 4

5555YS	(1) New 12.5L (GY - FI - F) Tubeless Tire, 8 Bolt Wheel . . .	100	518.00

OPTIONAL EQUIPMENT

5945RS	Offset Shank Extension Kit . . . . . (To Stagger Rear Row of Shanks) (Order 5 on 17, 19 and 21 shank models. (Order 6 on 23 shank models) *Recommended For Heavy Residue Conditions	49	292.00
18663BS	Gang Wrench, 2-3/4"	20	89.00

4233 SERIES 3 SECTION FLEXIBLE COULTER CHISEL ATTACHMENTS

ORDER CODE	DESCRIPTION	APPROX. WEIGHT (LBS)	LIST PRICE

FIVE ROW SPIKE DRAGS

All Required Hardware and Mounting Brackets
Five Rows of 3/4" x 11" Square Spikes on 9" Centers, 3" Spacing Overall

MODEL	SECTION SIZE	ARMS
SF4233-17	5½' 10¼' 5½'	6
SF4233-19	7' 10¼' 7'	6
SF4233-21	8' 10¼' 8'	6
SF4233-23	9½' 10¼' 9½'	6

17001687RS	SF4233-17	1450	5,499.00
17001690RS	SF4233-19	1561	5,762.00
17001694RS	SF4233-21	1579	5,845.00
17001698RS	SF4233-23	1664	6,093.00

The Following Arm Extensions Must Be Ordered with Five Row Spike Drags on SF4233's Equipped with Auto-Reset Shanks

7045RS	Harrow Arm Extension (Order One per Arm)	22	76.00

THREE ROW COIL TINE HARROW - HEAVY DUTY

Spring Loaded Parallel Drag Arms with all Required Hardware and Mounting Brackets
Three Rows of 5/8" x 30" Coil Tines on 12" Centers, 4" Spacing Overall, with Angle Adjustment and Backup Protection
13" Spacing

MODEL	SECTION SIZE	ARMS
SF4233-17	6' 10' 6'	6
SF4233-19	8' 10' 8'	6
SF4233-21	10' 8' 10'	6
SF4233-23	10' 10' 10'	6

17001742RS	SF4233-17	1675	8,087.00
17001743RS	SF4233-19	1825	8,676.00
17001744RS	SF4233-21	1845	9,088.00
17001745RS	SF4233-23	1865	9,323.00

The Following Arm Extensions Must Be Ordered with 3 Row Coil Tine Harrow on SF4233's Equipped with Auto-Reset Shanks and Offset Shank Mount Kit (5945RS). These Arm Extensions are not required with Rigid Shear Bolt Shanks and Offset Shank Mount.

16566RS	Harrow Arm Extension (Order One per Attachment)		453.00

Mississippi State Contract Discount: 5%

4233 SERIES 3 SECTION FLEXIBLE COULTER CHISEL ATTACHMENTS

ORDER CODE	DESCRIPTION	APPROX. WEIGHT (LBS)	LIST PRICE

REAR CHOPPER REELS

16" Diameter Reel with 15" Offset Blades
Two Trunnion Bearings, Triple Sealed and Greaseable, per Reel
All Mounting Arms and Hardware

MODEL	SECTION SIZE	ARMS
SF4233-17	90" 90" 90"	6
SF4233-19	90" 60" 60" 90"	8
SF4233-21	45" 75" 90" 75" 45"	10
SF4233-23	60" 75" 90" 75" 60"	10

17001685RS	SF4233-17	2002	9,411.00
17001688RS	SF4233-19	2332	11,376.00
17001691RS	SF4233-21	2731	13,032.00
17001695RS	SF4233-23	2842	13,728.00

ROLLING TREADERS - (Not Recommended in Rocky Conditions)

7/16" x 1-1/2" High Carbon Steel Teeth, 18" Diameter and 8 Teeth per Row
1-1/2" Square Gang Shafts with Triple Sealed Greaseable Bearings, Square Bore
Universal Modular Mounts with Hardware

MODEL	RECOMMENDED GANGS
SF4233-17	1 - RT8-35R / 1 - RT8-35L & 1 - RT15-70R / 1 - RT15-70L
SF4233-19	1 - RT8-35R / 1 - RT8-35L & 1 - RT17-80R / 1 - RT17-80L
SF4233-21 (Rigid)	1 - RT8-35R / 1 - RT8-35L & 1 - RT9-40R / 1 - RT9-40L & 1 - RT11-50R / 1 - RT11-50L
SF4233-21 (Auto)	2 - RT8-35R / 2 - RT8-35L & 1 - RT13-60R / 1 - RT13-60L
SF4233-23 (Rigid)	1 - RT8-35R / 1 - RT8-35L & 1 - RT9-40R / 1 - RT9-40L & 1 - RT13-60R / 1 - RT13-60L
SF4233-23 (Auto)	1 - RT8-35R / 1 - RT8-35L & 1 - RT13-60R / 1 - RT13-60L & 1 - RT9-40R / 1 - RT9-40L

17001686RS	SF4233-17	1817	10,798.00
17001689RS	SF4233-19	1785	11,037.00
17001692RS	SF4233-21 (for use with Rigid Shear Bolt)	2330	14,042.00
17001693RS	SF4233-21 (for use with Auto Reset)	2330	14,626.00
17001696RS	SF4233-23 (for use with Rigid Shear Bolt)	2523	15,219.00
17001697RS	SF4233-23 (for use with Auto Reset)	2523	15,944.00

STRIPPER KITS FOR ROLLING TREADERS

12000725BS	SF4233-17	229	1,268.00
12000726BS	SF4233-19	232	1,303.00
12000727BS	SF4233-21	243	1,589.00
12000728BS	SF4233-23	255	1,603.00

4412 SERIES DISC RIPPER

F.O.B. Beloit, KS

STANDARD CONFIGURATION

4 New 12 Ply, 12.5L Tubeless Tires
4 2” Slip-in Spindles with 6 Bolt Hub and 15 x 10 Wheels
2 Walking Beams with Greaseable Tapered Roller Bearings
2 3-1/2” x 16" Lift Cylinders with Hoses and Hardware
1 Single Point Front Mounted Depth Control for Main Depth Control
1 Single Lip Hitch with 2” Pin Hole and Hardened Bushing (7500287RS)
1 Adjustment Wrench
1 Tongue Jack
Hydraulic Disc Blade Adjustment with Travel 5-1/2” to 13-1/2” Above Points
Auto Reset Shank Assemblies (1-1/4” x 4") with 16" Vertical Trip Height and 40" Under Frame Clearance
1" x 2-1/2” x 12" Points (5288S)
Individual Front Blades - 22.33" x 4 Gauge Disc Blades with 12” Front Blade Spacing
Rear Gangs – 22” x 4 Gauge Disc Blades with 10-1/2” Rear Blade Spacing
C-Flex Mounted Disc Blades with 5 Bolt Hub, 1-3/4” Spindle, and Triple Lip Seals (Front Only)
C-Flex Bearing Standards (1” x 2-1/2”) on Individual Front Blades
High Strength 1-3/4” Round Stress Proof Gang Shafts (Gangs Only)
Triple Sealed Greaseable Trunnion Gang Bearings (Gangs Only)
C-Flex Bearing Standards (1-1/4” x 2-1/2”) on Gangs
4" Wide Rigid Scrapers Mounted to C-Flex Bearing Hangers (Gangs Only)
Stroke Control Segments for Front Disc Blade Adjustment
Depth Indicator for Rear Gang
Maintenance Free Lift System with UHMW Sleeves
Self-leveling Hitch
Warning Light Kit, Complete with Wiring
SMV Emblem and Safety Chain

MODEL NUMBER	SF4412-05	SF4412-07
CUTTING WIDTH	12’ 6”	17’ 6”
TRANSPORT WIDTH	15’ 9”	17’ 4”
NUMBER OF SHANKS	5	7
SHANK SPACING	30”	30”
NUMBER OF BLADES	12 / 18	18 / 24
BLADE SPACING	12” / 10 ½”	12” / 10 ½”

These prices reflect the standard configuration. If items other than those listed in the standard configuration are ordered, then the quoted price below will change.

For Quotation Purposes Only – Please Order Items from the Groups on the Next Pages

MODEL NUMBER	CUTTING WIDTH	SHANK SPACING	EST. WT.	LIST PRICE
Individual Front Blades, 22.33” x 4 Ga. and Rear Gangs, 22” x 4 Ga.				
SF4412-05	12’ 6"	30"	13615	49,894.00
SF4412-07	17’ 6"	30"	16200	59,721.00

4412 SERIES DISC RIPPER

ORDER CODE	DESCRIPTION	APPROX. WEIGHT (LBS)	LIST PRICE

Select One Order Code from Each Group, 01 through 08.

Group 01 Base Machine

SF4412-05	44120500, 5 Shank Disc Ripper	4764	22,534.00
SF4412-07	44120700, 7 Shank Disc Ripper	6381	26,731.00

Group 02 Individual Blades

Individual Front Blades - 22.33" x 4 Gauge Disc Blades with 12” Front Blade Spacing

12301563S	Disc Blades for SF4412-05	1550	8,691.00
12301565S	Disc Blades for SF4412-07	1806	10,521.00

Group 03 Rear Gangs

Rear Gangs – 22” x 4 Gauge Disc Blades with 10 ½” Rear Blade Spacing

12301564S	Rear Gangs for SF4412-05	1800	6,221.00
12301566S	Rear Gangs for SF4412-07	2000	6,894.00

Group 04 Shanks

Auto Reset Shank Assemblies (1¼” x 4") with 16" Vertical Trip Height and 40" Under Frame Clearance

7500331RS	Shank Assy for SF4412-05	1425	7,682.00
7500336RS	Shank Assy for SF4412-07	2565	10,749.00

Group 05 Points - 1" x 2½” x 12" Order 1 per Shank

5288S	Plain Ripper Point	10	30.00
12763BS	Ripper Point with 6” Chrome Cap	10	46.00
12765BS	Ripper Point with Dorsal Fin and Chrome Cap	10	69.00
12626BS	Ripper Point with Wing and Chrome Cap	15	129.00

(Note - Points with Chrome Cap, Dorsal Fin and/or Wings Are Not Recommended for Rocky Conditions.)

Group 06 Tires — Order Qty 4

3588S	(1) New 12 Ply, 12.5L x 15 Tubeless Tire, 6 Bolt Wheel	80	367.00

Group 07 Lift Assemblies

Two 3½” x 16" Lift Cylinders with Hoses and Hardware

7500447RS	Lift Assembly	745	2,998.00

Group 08 Hitches

7500430RS	Cast Single Lip Hitch with 2” Pin Hole	29	150.00

4412 SERIES DISC RIPPER

ORDER CODE	DESCRIPTION	APPROX. WEIGHT (LBS)	LIST PRICE

OPTIONAL EQUIPMENT

13734RS	Rear Tow Hitch with Hitch Slide and Ball Joint	364	1,862.00
2500165RS	Hydraulic Tow Package	16	394.00
6278BS	Shin Guard for (order 1 per Shank)	11	158.00
18663BS	Gang Wrench, 2-3/4"	20	89.00

3 ROW HEAVY DUTY COIL TINE HARROW

Spring Loaded Parallel Drag Arms with all Required Hardware and Mounting Brackets
Three Rows of 5/8” x 30” Coil Tines on 12” Centers, 4” spacing overall, with Angle Adjustment and Backup Protection
13” Spacing

17001746RS	SF4412-05	1045	5,001.00
17001747RS	SF4412-07	1650	7,353.00

MODEL	SECTION SIZE	ARMS
SF4412-05	8' 8'	4
SF4412-07	6' 8' 6'	6

Mississippi State Contract Discount: 5%

4511 and 4530 DISC CHISEL

F.O.B. Beloit, KS

STANDARD CONFIGURATION

2 Walking Tandems with Greaseable Tapered Roller Bearings 4511
4 Walking Tandems with Greaseable Tapered Roller Bearings 4530
1 Single Point Front Mounted Depth Control for Main Depth Control
1 Cast Single Lip Hitch with Oblong Hole for 2” Pin (7500430RS)
1 Adjustment Wrench
1 Tongue Jack
Independent Hydraulic Disc Blade Adjustment Front and Rear
1" x 2” x 18" Reversible Points (1400163S)
Individual Front Blades - 22.33" x 4 Gauge Disc Blades 12” Spacing
C-Flex Mounted Disc Blades with Five Bolt Hub, 1-3/4” Spindle, and Triple Lip Seals (Front Only)
C-Flex Bearing Standards (1” X 2-1/2”) on Individual Front Blades
High Strength 1-3/4” Round Stress Proof Gang Shafts on Rear Gangs with Greaseable Trunnion Bearings
C-Flex Bearing Standards (1-1/4” x 2-1/2”) on Rear Gangs
22" x 4 Gauge Disc Blades on Rear Gang with 10-1/2” Spacing and 4” Scrapers Mounted to C-Flex Hangers
2 Piece Shield on Each Individually Front Mounted C-Flex Hanger
Depth Indicator for Front and Rear Gangs
Maintenance Free Lift System with UHMW Sleeves
Self-leveling Hitch
Warning Light Kit, Complete with Wiring, SMV Emblem and Safety Chain

MODEL NUMBER	SF4511-09	SF4511-11	SF4511-13	SF4511-15	SF4530-19
CUTTING WIDTH of SHANKS	11’ 3”	13’ 9”	16’ 3”	18’ 9”	23’ 9”
TRANSPORT WIDTH	13’ 9”	17’ 2”	16’ 9”	18’ 8”	18’ 1”
TRANSPORT HEIGHT	6’ 8”	6’ 8”	8’ 9”	10’ 3”	11’ 7”
NUMBER OF SHANKS	9	11	13	15	19
SHANK SPACING	15”	15”	15”	15”	15”
NUMBER OF BLADES F®	12 / 16	14 / 20	18 / 22	20 / 26	24 / 32
BLADE SPACING F®	12”/10 ½”	12”/10 ½”	12”/10 ½”	12”/10 ½”	12”/10 ½”
TIRES AND SIZE (center)	(4) 12.5Lx15” 12 ply	(4) 12.5Lx15” 12 ply	(4) 12.5Lx15” Load range F	(4) 12.5Lx15” Load range F	(4) 12.5Lx15” Load range F
TIRES AND SIZE (wings)	N/A	N/A	N/A	N/A	(4) 12.5Lx15” 12 ply

4511 and 4530 DISC CHISEL

These prices reflect the standard configuration. If items other than those listed in the standard configuration are ordered, then the quoted price below will change.

For Quotation Purposes Only – Please Order Items from the Groups Below

MODEL NUMBER	CUTTING WIDTH	SHANK SPACING	EST. WT.	LIST PRICE
RIGID SHEAR BOLT SHANKS (1½" x 2" x 30")				
SF4511-09	11' 3"	15"	12,010	47,597.00
SF4511-11	13' 9"	15"	13,015	50,776.00
SF4511-13	16' 3"	15"	15,065	57,152.00
SF4511-15	18' 9"	15"	16,065	59,935.00
SF4530-19	23' 9"	15"	22,000	89,961.00
AUTO RESET SHANKS (1 ¼" x 2 ½" x 30")				
SF4511-09	11' 3"	15"	13,160	53,726.00
SF4511-11	13' 9"	15"	14,385	58,267.00
SF4511-13	16' 3"	15"	16,680	66,005.00
SF4511-15	18' 9"	15"	17,900	70,150.00
SF4530-19	23' 9"	15"	24,360	102,900.00

Auto Reset Shanks Feature Maximum Point Load Of 1,500 Lbs. And Maximum Vertical Trip Height Of 13". These Shanks Are Recommended In Rock Or Hard Ground Conditions.

Select One Order Code from Each Group, 01 through 06.

Group 01 Base Machine

ORDER CODE	DESCRIPTION	APPROX. WEIGHT (LBS)	LIST PRICE
SF4511-09	45110900, 9 Shank Disc Chisel	9500	30,490.00
SF4511-11	45111100, 11 Shank Disc Chisel	10625	30,943.00
SF4511-13	45111300, 13 Shank Disc Chisel	11250	31,342.00
SF4511-15	45111500, 15 Shank Disc Chisel	11950	32,176.00
SF4530-19	45301900, 19 Shank Disc Chisel	17000	52,402.00

Group 02 Front Gangs

Individual Front Blades - 22.33" x 4 Gauge Disc Blades with 12" Spacing

12301535S	Disc Blades for SF4511-09	6,841.00
12301537S	Disc Blades for SF4511-11	7,964.00
12301539S	Disc Blades for SF4511-13	9,440.00
12301541S	Disc Blades for SF4511-15	10,555.00
12301543S	Disc Blades for SF4530-19	13,374.00

Group 03 Rear Gangs

Rear Gangs – 22" x 4 Gauge Disc Blades with 10 ½" Spacing

12301534S	Rear Gangs for SF4511-09	5,606.00
12301536S	Rear Gangs for SF4511-11	6,533.00
12301538S	Rear Gangs for SF4511-13	9,754.00
12301540S	Rear Gangs for SF4511-15	9,912.00
12301542S	Rear Gangs for SF4530-19	10,326.00

4511 and 4530 DISC CHISEL

ORDER CODE	DESCRIPTION	APPROX. WEIGHT (LBS)	LIST PRICE

Select One Order Code from Each Group, 01 through 08.

Group 04 Shanks Order Quantity Indicated Above from Group 1

9503RS	Shank Assy, Rigid Shear Bolt, 1-1/2" x 2" x 30" on Edge . . .	56	302.00
12574RS	Shank Assy, Auto Reset, 1-1/4" x 2-1/2" x 30" on Edge	155	983.00

Group 05 Points / Shovels

MODEL	ORDER QTY	ORDER QUANTITY (LEFT & RIGHT)	
	POINTS	RIGHT TWISTED	LEFT TWISTED
SF4511-09	9	5	4
SF4511-11	11	6	5
SF4511-13	13	7	6
SF4511-15	15	8	7
SF4530-19	19	10	9

Points

1400163S	1” x 2" x 18" Heavy Duty Reversible Point	9	36.00

Right Twisted

1400005S	1/2" x 3" x 22" One Piece Twisted Shovel	9	46.00

Left Twisted

1400006S	1/2" x 3" x 22" One Piece Twisted Shovel	9	46.00

Group 06 Tires

MODEL	ORDER QUANTITY	
	CENTERS	WINGS
SF4511-09 SF4511-11	(4) 3588S	N / A
SF4511-13 SF4511-15	(4) 5555YS	N / A
SF4530-19	(4) 5555YS	(4) 3588S

SF4511-09, SF4511-11 and SF4530-19 Wings

3588S	(1) New 12 Ply, 12.5L x 15 Tubeless Tire . . . . . . 6 Bolt Wheel (15" x 10")	80	367.00

SF4511-13, SF4511-15 and SF4530-19 Center

5555YS	(1) New 12.5L x 15 (GY FI) Load Range F Tubeless Tire . . . 8 Bolt Wheel (15" x 10")	100	518.00

4511 and 4530 DISC CHISEL

ORDER CODE	DESCRIPTION	APPROX. WEIGHT (LBS)	LIST PRICE
	Select One Order Code from Each Group, 01 through 08.		
Group 07	**Hitch**		
7500430RS	Cast Single Lip Hitch with 2” Pin Hole	29	150.00
Group 08	**Lift Assemblies For 4530-19 Only**		
7500429RS	Lift Assembly for SF4530-19 Only	475	3,747.00
OPTIONAL EQUIPMENT			
12799RS	Rear Tow Hitch with Hitch Slide and Ball Joint	524	2,197.00
2500145RS	Hydraulic Tow Package		394.00
18663BS	Gang Wrench, 2-3/4"	20	89.00

3 ROW HEAVY DUTY COIL TINE HARROW

Spring Loaded Parallel Drag Arms with all Required Hardware and Mounting Brackets
Three Rows of 5/8” x 30” Coil Tines on 12” Centers, 4” spacing overall, with Angle Adjustment and Backup Protection
13” Spacing

SF4511 SERIES TOOLS

17001748RS	SF4511-09	985	5,001.00
17001749RS	SF4511-11	1135	5,118.00
17001750RS	SF4511-13	1315	7,235.00
17001751RS	SF4511-15	1540	7,617.00
17001752RS	SF4530-19	1715	8,175.00

MODEL	SECTION SIZE	ARMS
SF4511-09	8’ 6’	4
SF4511-11	10’ 8’	4
SF4511-13	6’ 6’ 6’	6
SF4511-15	6’ 10’ 6’	6
SF4530-19	8’ 10’ 8’	6

Mississippi State Contract Discount: 5%

4610 and 4630 DISC RIPPER

F.O.B. Wahpeton, ND

STANDARD CONFIGURATION

4610

2 Walking Tandems with Greaseable Tapered Roller Bearings
4 385/65R 22.50 Used Tires with 8 Bolt Hubs
2 Depth Collar Kit
2 Main Lift Cylinders 4.5" x 12"
2 Disc Lift Cylinders 4" x 8"
Complete with Hoses, Fittings and Hose Docking Station
1 Cast Single Lip Cat V Hitch for 2-3/4" Diameter Pin
1 Adjustment Wrench
1 Hydraulic Tongue Jack
Independent Hydraulic Disc Blade Adjustment
Spring Reset Parabolic Shanks, 1-1/4" High Strength Abrasion Resistant Steel with Chromium Carbide Shin Guards
Self-leveling Hitch
Warning Light Kit, Complete with Wiring, SMV Emblem and Safety Chain

4630

4 Walking Tandems with Greaseable Tapered Roller Bearings
8 385/65R 22.50 Used Tires with 8 Bolt Hubs
4 Depth Collar Kit
2 Main Lift Cylinders 5" x 12"
2 Wing Lift Cylinders 4.5" x 12"
2 Main Disc Lift Cylinders 4" x 8"
2 Wing Disc Lift Cylinders 3.75" x 8"
4 Fold Cylinders 4" x 36"
Complete with Hoses, Fittings and Hose Docking Station
1 Cast Single Lip Cat V Hitch for 2-3/4" Diameter Pin
1 Adjustment Wrench
1 Hydraulic Tongue Jack
Independent Hydraulic Disc Blade Adjustment
Spring Reset Parabolic Shanks, 1-1/4" High Strength Abrasion Resistant Steel with Chromium Carbide Shin Guards
Self-leveling Hitch
Warning Light Kit, Complete with Wiring, SMV Emblem and Safety Chain

Model Number	SF4610-7	SF4610-9	SF4630-11	SF4630-13
Cutting Width	14' 0"	18' 0"	22' 0"	26' 0"
Transport Width	14' 5"	19' 7"	19' 3"	19' 3"
Transport Height	7' 0"	7' 0"	13' 6"	14' 6"
Number of Shanks	7	9	11	13
Shank Spacing	24"	24"	24"	24"
Number of Blades	20	28	36	40
Blade Spacing (Cut)	15" (7.5")	15" (7.5")	15" (7.5")	15" (7.5")
Tires and Size (Center)	(4) 385/65R 22.50	(4) 385/65R 22.50	(4) 385/65R 22.50	(4) 385/65R 22.50
Tires and Size (Wings)	N/A	N/A	(4) 385/65R 22.50	(4) 385/65R 22.50

4610 and 4630 DISC RIPPER

These prices reflect the standard configuration. If items other than those listed in the standard configuration are ordered, then the quoted price below will change.

For Quotation Purposes Only – Please Order Items from the Groups Below

MODEL	DESCRIPTION	NUMBER OF SHANKS	ESTIMATED WEIGHT	LIST PRICE WITH 7" POINTS
SF4610-7	7 Shank (24") Disc Ripper	7	16078	56,866.00
SF4610-9	9 Shank (24") Disc Ripper	9	18779	68,443.00
SF4630-11	11 Shank (24") Disc Ripper	11	30656	99,327.00
SF4630-13	13 Shank (24") Disc Ripper	13	32011	112,945.00

ORDER CODE	DESCRIPTION	APPROX. WEIGHT (LBS)	LIST PRICE

Select One Order Code from Each Group, 01 through 02.

Group 01 Base Machine

Non-Folding Models

SF4610-7	247215AW, 7 Shank (24") Disc Ripper	17036	56,061.00
SF4610-9	247216AW, 9 Shank (24") Disc Ripper	20118	67,408.00

Folding Models

SF4630-11	247217AW, 11 Shank (24") Disc Ripper	31255	98,062.00
SF4630-13	247218AW, 13 Shank (24") Disc Ripper	32663	111,450.00

Group 02 Points - Order 1 per Shank

351152AW	7" Wide Cast Wing Point	21	115.00
221353AW	3" Wide Ductile Iron Straight Point with 10" Wide Wings	23	122.00
233409AW	3" Wide Ductile Iron Straight Point	20	84.00

Group 02 Tires

350282AW	4-385/65R22.50 (Used) for 4610	1025	2,371.00
354068AW	4-385/65R22.50 (NEW) for 4610	1112	4,849.00
350286AW	8-385/65R22.50 (used) for 4630	2050	4,687.00
354072AW	8-385/65R22.50 (NEW) for 4630	2224	9,646.00

Optional Equipment

351446AW	Rear Tow Hitch (Straight Tongue 1" Pin)	1011	2,227.00
238407AW	Hydraulic Extension Package	53	416.00
236099AW	Safety Light Extension Package	3	211.00

4610 and 4630 DISC RIPPER ATTACHMENTS

ORDER CODE	DESCRIPTION	APPROX. WEIGHT (LBS)	LIST PRICE

OPTIONAL EQUIPMENT

3 & 4 Bar Heavy Duty Coil Tine Harrow (5/8" x 30" Tines)

Model	Overlap (Each Side)	Section Size
SF4610-7	12"	8' 8'
SF4610-9	12"	6' 8' 6'
SF4630-11	12"	6' 6' 6' 6'
SF4630-13	12"	6' 8' 8' 6'

	3 Bar HD Coil Tine Harrow		
247951AW	SF4610-7	1113	3,968.00
247952AW	SF4610-9	1583	5,724.00
247953AW	SF4630-11	2003	7,365.00
247954AW	SF4630-13	2805	7,861.00
	4 Bar HD Coil Tine Harrow		
351116AW	SF4610-7	1364	4,701.00
350658AW	SF4610-9	1916	6,625.00
351117AW	SF4630-11	2530	8,820.00
351118AW	SF4630-13	2639	9,149.00

2-Bar Heavy Duty Coil Tine Harrow (5/8" x 26" Tines) with 13" diameter Flat Bar Basket

Model	Overlap (Each Side)	Section Size
SF4610-7	12"	8' 8'
SF4610-9	12"	6' 8' 6'
SF4630-11	12"	6' 6' 6' 6'
SF4630-13	12"	6' 8' 8' 6'

247955AW	SF4610-7	1399	6,131.00
247956AW	SF4610-9	1981	8,801.00
247957AW	SF4630-11	2517	11,366.00
247259AW	SF4630-13	2717	12,041.00

5-Bar Spike Tooth Harrow (3/4" x 11" Spikes)

Model	Overlap (Each Side)	Section Size	Arms
SF4610-7	6"	7' 6" 7' 6"	4
SF4610-9	7"	5' 10" 7' 6" 5' 10"	5
SF4630-11	16"	5' 10" 6' 8" 6' 8" 5' 10"	8
SF4630-13	14"	6' 8" 7' 6" 7' 6" 6' 8"	8

351182AW	SF4610-7	1214	4,132.00
351183AW	SF4610-9	1582	5,477.00
351184AW	SF4630-11	2203	7,561.00
351185AW	SF4630-13	2426	8,213.00

4700 SERIES IN LINE RIPPER
F.O.B. Wahpeton, ND

4" x 6" x 3/8" 2-Bar Frame, Rigid, Flat-fold or Over Center Fold
Available in: 5, 7, 8 and 12 Row Models
3-Point Hitch 5, 7 and 8 Row Models (Optional Pull-type Conversion)
Pull-type - 12 Row Model
30" Shank Spacing
35" Under Frame Clearance
16" Maximum Shank Working Depth
Parabolic or Minimal Disturbance Shank
Rigid or Spring Reset Shank Holders
Parabolic Shanks: 1-1/4" x 3" Abrasion Resistant Steel
Minimal Disturbance Shanks: 1-1/4" x 4" Abrasion Resistance Steel
Transport Warning Lights
(2) Parking Stands
20" Rippled Coulter Blades (Optional)
Shank Staggering Brackets (Optional)
(2) 20.5 x 10; 10 Ply Gauge Wheels and Tires (Optional 3-Point Models)
(6) 11L x 15, 12 Ply Tires with 6 Bolt Wheels (12 Row)
(2) 4" x 24" Wing Fold Cylinders with Hoses (8 Row)
(2) 5" x 24" Wing Fold Cylinders with Hoses (12 Row)
(6) 12" Hydraulic Lift Cylinders (12 Row)
Pull-hitch (Optional)
(1) Cast Single Lip Hitch for 2" Diameter Pin
Safety Chain
Fore and Aft Adjustment Turnbuckle
(2) 4" x 12" Hydraulic Lift Cylinders with Hoses
(2) 11L x 15, 12 Ply Tires with 6 Bolt Wheels

Model Number	SF4710-5	SF4710-7	SF4710-8 (Rigid)	SF4730-8 (FF)	SF4730-12
Cutting Width	12' 5"	17' 5"	20' 0"	20' 0"	30' 0"
Transport Width	10' 10"	16' 2"	20' 2"	12' 0"	16' 5"
Transport Height	N/A	N/A	N/A	14' 6"	14' 6"
Number of Shanks	5	7	8	8	12
Shank Spacing	30"	30"	30"	30"	30"
Number of Coulters	5	7	8	8	12
Coulter Spacing	30"	30"	30"	30"	30"
Tires and Size (Center)	N/A	N/A	N/A	N/A	(4) 11L x 15, 12 Ply
Tires and Size (Wings)	N/A	N/A	N/A	N/A	(2) 11L x 15, 12 Ply

4700 SERIES IN LINE RIPPER

ORDER CODE	DESCRIPTION	APPROX. WEIGHT (LBS)	LIST PRICE

Select One Order Code from Each Group, 01 through 05

Group 01 Base Machine

Non-Folding 3-Point Models

SF4710-5	352411AW, 5 Shank (30") In Line Ripper	1189	3,836.00
SF4710-7	235594AW, 7 Shank (30") In Line Ripper	1608	5,043.00
SF4710-8	235598AW, 8 Shank (30") In Line Ripper	1716	4,689.00

Folding 3-Point Models

SF4730-8	236548AW, 8 Shank (30") In Line Ripper	2592	8,824.00

Pull Type Models (with Pull Type Hitch, (6) Hydraulic Gauge Wheels, Hydraulic Fold Cylinders with Hoses)

SF4730-12	235993AW, 12 Shank (30") In Line Ripper	6864	25,629.00

Note: 3-Point Models Require Gauge Wheels. Gauge Wheels are Optional on Pull Type.

Group 02 Shank Holder - Order 1 per Shank

235584AW	Rigid Shank Holder	93	416.00
350625AW	Spring Reset Shank Holder	289	1,432.00

Group 03 Shank Selection - Order 1 per Shank Holder

233739AW	Minimal Disturbance Shank	59	283.00
240024AW	Parabolic Shank	45	212.00

Group 04 Ripper Point Selection - Order 1 per Shank

237333AW	Point 7" Wing Cast and Guard with Hardware	21	134.00
237334AW	Point 2" Straight Cast and Guard with Hardware	17	100.00
234196AW	Point 2" Straight Cast and Guard with Hardware (Fits Minimal Disturbance Shank Only)	25	149.00
237332AW	Point 7" Wing Cast and Guard with Hardware (Fits Minimal Disturbance Shank Only)	29	184.00

Group 05 Parking Stand - (Two Required for 3-Point Units)

59165AW	Parking Stand with Hardware	36	92.00

4700 SERIES IN LINE RIPPER

ORDER CODE	DESCRIPTION	APPROX. WEIGHT (LBS)	LIST PRICE
OPTIONAL EQUIPMENT			
Coulter Attachment (In Sets - Order 1 Set per Unit)			
234224AW	20" Rippled Coulter with Compression Spring (Set of 5) . . . (For SF4710-5)	393	2,728.00
234226AW	20" Rippled Coulter with Compression Spring (Set of 7) . . . (For SF4710-7)	550	3,819.00
234227AW	20" Rippled Coulter with Compression Spring (Set of 8) . . . (For SF4710-8 and SF4730-8)	628	4,364.00
234229AW	20" Rippled Coulter with Compression Spring (Set of 12) . . . (For SF4730-12)	942	6,546.00
Disc Leveler Attachment - Order One Per Shank (Fits Parabolic Shank Only)			
223232AW	Disc Leveler	210	882.00
Row Sealer "Slot Tillage" (For Spring Reset Shank Only)			
240762AW	Row Sealer, Wave Coulter (Order One Per Shank)	229	880.00
Reel Buster "Slot Tillage" (Requires Row Sealer Above)			
234049AW	Reel Buster 14-1/4" D x 14-1/16" W (Order one Per Row) . . .	99	409.00
Pull Type Hitch (Converts 3-Point Units to Pull Type)			
351468AW	Pull Type Hitch with Hinged Tongue, Cast Hitch for 2" Pin. . . (2) 11L x 15" 12-Ply Tires, Safety Chain (2) 4" x 12" Hydraulic Cylinders with Hoses and Fittings (In Base on SF4730-12)	1863	6,978.00
Shank Staggering Bracket (Extends the Shank Rearward)			
62324AW	12" Shank Staggering Bracket with Attaching Hardware	68	268.00
Furrower Attachment (For Parabolic Shank Only)			
60920AW	7" Furrower with Hardware (Requires 60789AW Bracket) . . .	6	21.00
60789AW	Attaching Bracket and Hardware for 7" Furrower	5	27.00
Gauge Wheel (Required with 3-Point Units - Not Required with Pull Hitch)			
351467AW	Pair of Gauge Wheels with 20.5 x 10, 10-Ply Rated . . . . . (Includes Hardware)	196	1,139.00

FACTORY OR DEALERSHIP ASSEMBLY AMOUNTS ON 5000 SERIES
(DISCOUNTS DO NOT APPLY)

The factory or dealership set-up amounts will be charged for machines set-up by Sunflower. Set-up amounts are the same whether machines are shipped via our truck (gangs off wings, etc.) or set-up completely and picked up by dealer's truck. Factory assembly charge includes hydraulic hose, hydraulic oil, and tips (hydraulic system is charged). Dealer location assembly charge includes hydraulic hose, and tips. (Hydraulic oil is not included) See note below.

MODEL NUMBER	FACTORY ORDER CODE	FACTORY SET-UP RATE	DEALER LOCATION ORDER CODE	DEALER LOCATION SET-UP RATE
SF5035-18 ♦	SET0126S	**1,071.00**	SET0126DS	**1,122.00**
SF5035-20 ♦	SET0127S	**1,129.00**	SET0127DS	**1,183.00**
SF5035-22 ♦	SET0128S	**1,204.00**	SET0128DS	**1,262.00**
SF5035-24 ♦	SET0129S	**1,252.00**	SET0129DS	**1,311.00**
SF5035-26 ♦	SET0130S	**1,307.00**	SET0130DS	**1,370.00**
SF5035-28 ♦	SET0131S	**1,356.00**	SET0131DS	**1,420.00**
SF5035-30 ♦	SET0132S	**1,458.00**	SET0132DS	**1,528.00**
SF5035-32 ♦	SET0133S	**1,516.00**	SET0133DS	**1,588.00**
SF5035-34 ♦	SET0134S	**1,565.00**	SET0134DS	**1,639.00**
SF5035-36 ♦	SET0135S	**1,620.00**	SET0135DS	**1,697.00**
SF5135-36	SET0136S	**1,867.00**	SET0136DS	**1,956.00**
SF5135-38	SET0137S	**1,926.00**	SET0137DS	**2,017.00**
SF5135-40	SET0138S	**2,028.00**	SET0138DS	**2,124.00**
SF5135-42	SET0139S	**2,076.00**	SET0139DS	**2,175.00**
SF5056-45 ♦	SET0140S	**2,398.00**	SET0140DS	**2,512.00**
SF5056-49 ♦	SET0141S	**2,559.00**	SET0141DS	**2,681.00**
SF5056-55 ♦	SET0143S	**2,872.00**	SET0143DS	**3,009.00**
SF5056-59 ♦	SET0144S	**3,024.00**	SET0144DS	**3,168.00**
SF5056-63♦	SET0145S	**3,185.00**	SET0145DS	**3,336.00**
Coil Tine Harrow	SET0146S	**22.00 per foot**	SET0146DS	**23.00 per foot**
Spike Drag	SET0147S	**19.00 per foot**	SET0147DS	**20.00 per foot**
Three Row Tine and Reel	SET0148S	**24.00 per foot**	SET0148DS	**25.00 per foot**
Three Row Spike and Reel	SET0149S	**21.00 per foot**	SET0149DS	**22.00 per foot**

Sunflower Recommends These Set-Up Figures Be Used By Dealers When Transferring Equipment

♦ ***Frames are over-width and will require special handling and/or permits.***

Dealership Assembly requirements:

1. The dealership assembly service must be ordered separately from the implement. (initiates scheduling of service) Please order dealership assembly service from the field installed options tab in e-ordering.
2. Include in the dealership assembly order request the order and/or invoice number of the implement to be assembled.
3. Dealer supplies hydraulic oil (oil is not included).
4. Dealer supplies a fork lift of sufficient size to be used by AGCO's assembly crew.

5035 and 5135 SERIES THREE SECTION FIELD CULTIVATORS

F.O.B. Beloit, KS

STANDARD CONFIGURATION

8 New 8 Ply, 11L x 15 Tires on 15” x 8” Six Bolt Wheels and Hubs with 2” Slip-in Spindles (18’-28’)
4 New 12 Ply, 11L x 15 Tires on Six Bolt Wheels and Hubs with 2” Slip-in Spindles on Center (30’-36’)
4 New 11L x 15 GY - FI Tires (Load F) with Eight Bolt Wheels and Hubs with 2-1/4” Slip-in Spindles on Center of All 5135’s
4 New 8 Ply, 11L x 15 Tires on 15" x 8" Six Bolt Wheels and Hubs with 2” Slip-in Spindles on Wings (30’-36’)
4 New 8 Ply, 11L x 15 Tires on 15" x 10" Six Bolt Wheels and Hubs with 2” Slip-in Spindles on Wings (5135’s)
4 Walking Beams with Greaseable Tapered Roller Bearings (18’ to 42’)
2 Front Mounted Adjustable Non-swivel Gauge Wheels on 26’ through 42’ (7500348RS)
1 Single Point Front Mounted Depth Control
1 Double Lip Hitch with 1-1/4" Hole, on 18’ through 24’ (7500017S)
1 Single Lip Hitch with 1-7/8” Hole, on 26’ through 28’ (7500016S)
1 Cast Single Lip Hitch with 2" Oblong Pin Hole, 30’ through 42’
1 Tongue Jack
Self-leveling Tongue
Spring Tension Shank Assemblies (190 lb. Point Load) or 2 Piece S-tine Shank Assemblies (160 lb. Point Load)
Shanks are on 6” Spacing with 9” Plain Sweeps (47º) and have 24” Vertical Clearance
Safety Equipment Including: Light Kit, SMV Emblem, and Safety Chain

MODEL NO.	TRANSPORT WIDTH	TRANSPORT. HEIGHT
SF5035-18	14’	8’ 5”
SF5035-20	14’	9’ 4”
SF5035-22	13’	10’ 4”
SF5035-24	13’	11’ 3”
SF5035-26	13’	12’ 1”
SF5035-28	13’	13’ 2”
SF5035-30	17’	12’ 1”
SF5035-32	17’	13’ 2”
SF5035-34	17’	14’ 2”
SF5035-36	17’	15’ 1”
SF5135-36 ♦	15’ 9”	13’ 6”
SF5135-38 ♦	15’ 9”	13’ 6”
SF5135-40 ♦	17’ 9”	13’ 6”
SF5135-42 ♦	17’ 9”	13’ 6”

◆ Note: Model 5135 is a Split Wing Design, Which Reduces Transport Height and Width.
In the Field, It is a True Three-Section w/ the Lift Wheels Located Near the Outside for Good Depth Control.
It Will Require 2500 PSI to Operate the Fold Cylinders.

Mississippi State Contract Discount: 5%

5035 and 5135 SERIES THREE SECTION FIELD CULTIVATORS

These prices reflect the standard configuration. If items other than those listed in the standard configuration are ordered, then the quoted price below will change.

For Quotation Purposes Only – Please Order Items from the Groups on the Next Pages

MODEL NUMBER	CUTTING WIDTH	FRAME SIZE	NO. OF SHANKS	SHANK SPACING	EST. WT.	LIST PRICE
SPRING TENSION SHANKS ON 6” SPACING						
SF5035-18	18’ 6"	4’ - 10’ 6”- 4’	37	6"	6000	28,689.00
SF5035-20	20’ 6"	5’ - 10’ 6”- 5’	41	6"	6350	30,349.00
SF5035-22	22’ 6"	6’ - 10’ 6”- 6’	45	6"	7100	31,459.00
SF5035-24	24’ 6"	7’ - 10’ 6”- 7’	49	6"	7450	32,076.00
SF5035-26	26’ 6"	8’ - 10’ 6”- 8’	53	6"	7900	34,194.00
SF5035-28	28’ 6"	9’ - 10’ 6”- 9’	57	6"	8250	35,191.00
SF5035-30	30’ 6"	8’ - 14’ 6”- 8’	61	6"	9300	38,821.00
SF5035-32	32’ 6"	9’ - 14’ 6”- 9’	65	6"	9650	39,771.00
SF5035-34	34’ 6"	10’ - 14’ 6”- 10’	69	6"	10100	43,029.00
SF5035-36	36’ 6"	11’ - 14’ 6”- 11’	73	6"	10450	44,159.00
SF5135-36SW	36’ 6"	11’ 6”- 12’- 11’ 6”	73	6"	10800	51,457.00
SF5135-38SW	38’ 6"	12’ 6”- 12’- 12’ 6”	77	6"	11150	52,767.00
SF5135-40SW	40’ 6"	12’ 6”- 14’- 12’ 6”	81	6"	11500	54,539.00
SF5135-42SW	42’ 6"	13’ 6”- 14’- 13’ 6”	85	6"	11950	55,864.00
2 PIECE S-TINE SHANKS ON 6” SPACING						
SF5035-18	18’ 6"	4’ - 10’ 6”- 4’	37	6"	5815	27,431.00
SF5035-20	20’ 6"	5’ - 10’ 6”- 5’	41	6"	6145	28,955.00
SF5035-22	22’ 6"	6’ - 10’ 6”- 6’	45	6"	6875	29,929.00
SF5035-24	24’ 6"	7’ - 10’ 6”- 7’	49	6"	7205	30,410.00
SF5035-26	26’ 6"	8’ - 10’ 6”- 8’	53	6"	7635	32,389.00
SF5035-28	28’ 6"	9’ - 10’ 6”- 9’	57	6"	7965	33,250.00
SF5035-30	30’ 6"	8’ - 14’ 6”- 8’	61	6"	8995	36,747.00
SF5035-32	32’ 6"	9’ - 14’ 6”- 9’	65	6"	9325	37,561.00
SF5035-34	34’ 6"	10’ - 14’ 6”- 10’	69	6"	9755	40,683.00
SF5035-36	36’ 6"	11’ - 14’ 6”- 11’	73	6"	10085	41,677.00
SF5135-36SW	36’ 6"	11’ 6”- 12’ - 11’ 6”	73	6"	10435	48,975.00
SF5135-38SW	38’ 6"	12’ 6”- 12’ - 12’ 6”	77	6"	10765	50,149.00
SF5135-40SW	40’ 6"	12’ 6”- 14’ - 12’ 6”	81	6"	11095	51,785.00
SF5135-42SW	42’ 6"	13’ 6”- 14’ - 13’ 6”	85	6"	11525	52,974.00

5035 and 5135 SERIES THREE SECTION FIELD CULTIVATORS

ORDER CODE	DESCRIPTION	APPROX. WEIGHT (LBS)	LIST PRICE

Select One Order Code from Each Group, 01 through 07.

Group 01 Base Machine

SF5035-18	50351800, 37 Shank Field Cultivator, 18'	3800	18,643.00
SF5035-20	50352000, 41 Shank Field Cultivator, 20'	3990	19,655.00
SF5035-22	50352200, 45 Shank Field Cultivator, 22'	4580	20,117.00
SF5035-24	50352400, 49 Shank Field Cultivator, 24'	4770	20,086.00
SF5035-26	50352600, 53 Shank Field Cultivator, 26'	3952	20,521.00
SF5035-28	50352800, 57 Shank Field Cultivator, 28'	4478	20,870.00
SF5035-30	50353000, 61 Shank Field Cultivator, 30'	5996	23,707.00
SF5035-32	50353200, 65 Shank Field Cultivator, 32'	6186	24,009.00
SF5035-34	50353400, 69 Shank Field Cultivator, 34'	6476	26,619.00
SF5035-36	50353600, 73 Shank Field Cultivator, 36'	6666	27,101.00
SF5135-36SW	51353600, Split Wing, 73 Shank Field Cultivator, 36'	6952	33,755.00
SF5135-38SW	51353800, Split Wing, 77 Shank Field Cultivator, 38'	7142	34,417.00
SF5135-40SW	51354000, Split Wing, 81 Shank Field Cultivator, 40'	7332	35,541.00
SF5135-42SW	51354200, Split Wing, 85 Shank Field Cultivator, 42'	7622	36,218.00

Group 02 Shanks Order Quantity Indicated Above (5/8" x 1¾" Shank, 24" Vertical Clearance)

18749BS	Spring Tension Shank Assembly (190 lb Point Load)	37	149.00
12375BS	2 Piece S-Tine Shank Assembly (160 lb Initial Point Load) . .	25	115.00

Group 03 Sweeps Order 1 per Shank

1400161S	9" Plain Sweeps (47º).	4	13.00

5035 and 5135 SERIES THREE SECTION FIELD CULTIVATORS

ORDER CODE	DESCRIPTION	APPROX. WEIGHT (LBS)	LIST PRICE

Select One Order Code from Each Group, 01 through 07.

Group 04 Tires

MODEL SIZE	ORDER QUANTITY	
	CENTERS	WINGS
18' through 28'	(4) 6191YS or 6190YS	(4) 6191YS or 6190YS
30' through 36'	(4) 6190YS	(4) 6191YS or 6190YS
SF5135 36' through 42'	(4) 5552YS	(4) 3058YS or 3587YS or 5552YS if HD Wing Lift is ordered (7500395RS)

All Wheels Are 15" x 8"

6191YS	(1) New 8 Ply, 11L x 15 Tubeless Tire, 6 Bolt Wheel.	63	265.00
6190YS	(1) New 12 Ply, 11L x 15 Tubeless Tire, 6 Bolt Wheel	69	342.00

All Wheels Are 15" x 10"

3058YS	(1) New 8 Ply, 11L Tubeless Tire, 6 Bolt Wheel	65	319.00
3587YS	(1) New 12 Ply, 11L Tubeless Tire, 6 Bolt Wheel	74	350.00
5552YS	(1) New 11L x 15 (GY - FI) Load Range F Tubeless Tire . . . 8 Bolt Wheel (15" x 10") **Required** if Ordering 7500395RS from Group 5 Below	85	449.00

Group 05 Lift Assemblies

7500394RS	Walking Tandems 2" Spindle for 5035, 5135 Wing.	192	1,772.00
7500395RS	Heavy Duty Walking Tandems 2-1/4" Spindle for 5135 Wings. (To Match Center Section) **Requires** 5552YS from Group 4 Above	198	2,334.00

Group 06 Gauge Wheels – Optional 18' – 24' / Required 26' – 42'

7500348RS	Two Front Mounted Adjustable Rigid Gauge Wheels	136	1,032.00
7500393RS	Two Front Mounted Adjustable Swivel Gauge Wheels.	463	2,069.00

Rigid Gauge Wheels Used in Standard Configuration Price

5035 and 5135 SERIES THREE SECTION FIELD CULTIVATORS

ORDER CODE	DESCRIPTION	APPROX. WEIGHT (LBS)	LIST PRICE

Select One Order Code from Each Group, 01 through 07.

Group 07 Hitches for 18’ through 28’ Only

18’ through 24’

7500017S	Double Lip Hitch with 1-1/4” Pin Hole	20	160.00
7500015S	Double Lip Hitch with 1-13/16” Pin Hole	20	163.00
7500018S	Single Lip Hitch with 1-1/4" Pin Hole	20	160.00
7500016S	Single Lip Hitch with 1-7/8" Pin Hole	20	163.00

26’ through 28’

7500016S	Single Lip Hitch with 1-7/8" Pin Hole	20	163.00
7500083S	Single Lip Hitch with 2-1/4” Pin Hole	20	163.00
7500015S	Double Lip Hitch with 1-13/16” Pin Hole	20	163.00

OPTIONAL EQUIPMENT

12603RS	Rear Tow Hitch with Hitch Slide and Ball Joint (not available with 3 Row Coil Tine & Reel and 3 Row Spike & Reel)	415	1,961.00
12634PLS	Wiring Harness to Plug Soil Conditioner Lights into Implement Lights		223.00

Hydraulic Tow Package – Hoses to Accommodate 7200 Series Soil Conditioner

2500141RS	SF5035-18’ through 28’	25	406.00
2500142RS	SF5035-30’ through 36’	25	406.00
2500140RS	SF5135-36’ through 42’	25	406.00

5035 and 5135 SERIES THREE SECTION FIELD CULTIVATORS

THREE ROW COIL TINE FINISHING HARROWS FOR SF5035 and SF5135

Spring Loaded Drag Arms with all Required Hardware and Mounting Brackets
Three Rows of 3/8" x 16" Coil Tines on 7½" Centers, 2½" Spacing Overall, with Angle Adjustment and Backup Protection

ORDER CODE	ADAPTS TO	LEFT WING	CENTER SECTION	RIGHT WING	EST. WEIGHT	LIST PRICE
17001314RS	5035-18	52 ½"	52 ½" & 52 ½"	52 ½"	855	4,111.00
17001316RS	5035-20	67 ½"	97 ½"	67 ½"	933	4,267.00
17001317RS	5035-22	82 ½"	97 ½"	82 ½"	837	4,229.00
17001319RS	5035-24	97 ½"	97 ½"	97 ½"	886	4,406.00
17001320RS	5035-26	97 ½"	52 ½" & 52 ½"	97 ½"	1018	4,540.00
17001322RS	5035-28	52 ½" & 52 ½"	52 ½" & 52 ½"	52 ½" & 52 ½"	1282	4,802.00
17001327RS	5035-30	97 ½"	82 ½" & 67 ½"	97 ½"	1040	5,207.00
17001329RS	5035-32	52 ½" & 52 ½"	67 ½" & 82 ½"	52 ½" & 52 ½"	1289	5,474.00
17001331RS	5035-34	52 ½" & 67 ½"	52 ½" & 82 ½"	67 ½" & 52 ½"	1340	6,433.00
17001333RS	5035-36	67 ½" & 67 ½"	52 ½" & 82 ½"	67 ½" & 67 ½"	1365	6,592.00
17001559RS	5135-36	52 ½" & 82 ½"	82 ½" & 52 ½"	82 ½" & 52 ½"	1425	7,293.00
17001562RS	5135-38	67 ½" & 82 ½"	82 ½" & 52 ½"	82 ½" & 67 ½"	1482	7,472.00
17001565RS	5135-40	82 ½" & 67 ½"	97 ½" & 67 ½"	67 ½" & 82 ½"	1495	8,563.00
17001556RS	5135-42	82 ½" & 82 ½"	82 ½" & 67 ½"	82 ½" & 82 ½"	1530	8,631.00

THREE ROW COIL TINE AND FINISHING REEL FOR SF5035 and SF5135

Spring Loaded Drag Arms with all Required Hardware and Mounting Brackets
Three Rows of 3/8" x 16" Coil Tines on 7½" Centers, 2½" Spacing Overall, with Angle Adjustment and Backup Protection
11" Diameter Reels with Five Spiral Blades and Two 1-3/4" Greaseable Bearings on Each Reel

ORDER CODE	ADAPTS TO	LEFT WING	CENTER SECTION	RIGHT WING	EST. WEIGHT	LIST PRICE
17000789RS	5035-18	52 ½"	52 ½" & 52 ½"	52 ½"	1878	10,967.00
17000790RS	5035-20	67 ½"	97 ½"	67 ½"	1896	10,994.00
17000792RS	5035-22	82 ½"	97 ½"	82 ½"	1977	11,301.00
17000794RS	5035-24	97 ½"	97 ½"	97 ½"	2141	12,340.00
17000795RS	5035-26	97 ½"	52 ½" & 52 ½"	97 ½"	2195	12,560.00
17000797RS	5035-28	52 ½" & 52 ½"	52 ½" & 52 ½"	52 ½" & 52 ½"	2310	13,000.00
17000993RS	5035-30	97 ½"	67 ½" & 82 ½"	97 ½"	2430	14,221.00
17000995RS	5035-32	52 ½" & 52 ½"	67 ½" & 82 ½"	52 ½" & 52 ½"	2695	15,518.00
17000996RS	5035-34	52 ½" & 67 ½"	82 ½" & 52 ½"	67 ½" & 52 ½"	2985	17,084.00
17000998RS	5035-36	67 ½" & 67 ½"	82 ½" & 52 ½"	67 ½" & 67 ½"	3080	17,399.00
17001769RS	5135-36SW	52 ½" & 82 ½"	82 ½" & 52 ½"	82 ½" & 52 ½"	3575	18,131.00
17001761RS	5135-38SW	57 ½" & 82 ½"	82 ½" & 52 ½"	82 ½" & 67 ½"	3625	18,463.00
17001770RS	5135-40SW	82 ½" & 67 ½"	97 ½" & 67 ½"	67 ½" & 28 ½"	3675	19,101.00
17001719RS	5135-42SW	82 ½" & 82 ½"	82 ½" & 67 ½"	82 ½" & 82 ½"	3725	19,794.00

NOTE: Rear Tow Hitches are not Available with 3 Row Coil Tine and Reel.

5035 and 5135 SERIES THREE SECTION FIELD CULTIVATORS

FOUR ROW HIGH RESIDUE SPIKE DRAG FOR SF5035 and SF5135

Four Rows of 3/4” x 15" Round Teeth on 3" Overall Spacing, 12" Spacing on Each Row, and All Required Hardware

ORDER CODE	ADAPTS TO	LEFT WING	CENTER SECTION	RIGHT WING	EST. WEIGHT	LIST PRICE
17001526RS	5035-18	6’	9’	6’	1093	4,750.00
17001544RS	5035-20	7’	9’	7’	1143	4,774.00
17001527RS	5035-22	8’	9’	8’	1193	4,945.00
17001528RS	5035-24	9’	9’	9’	1253	5,108.00
17001529RS	5035-26	10’	9’	10’	1293	5,274.00
17001568RS	5035-28	11’	9’	11’	1318	5,446.00
17001569RS	5035-30	9’	15’	9’	1392	6,050.00
17001570RS	5035-32	10’	15’	10’	1442	6,217.00
17001571RS	5035-34	11’	15’	11’	1503	6,367.00
17001572RS	5035-36	12’	15’	12’	1560	6,549.00
17001560RS	5135-36	6’ & 7’	13’	7’ & 6’	1970	7,919.00
17001563RS	5135-38	7’ & 7’	13’	7’ & 7’	1995	8,070.00
17001566RS	5135-40	7’ & 7’	15’	7’ & 7’	2055	8,655.00
17001554RS	5135-42	8’ & 7’	15’	7’ & 8’	2120	8,835.00

FIVE ROW SPIKE DRAG FOR SF5035 and SF5135

Five Rows of 3/4" x 11" Square Spikes on 9" Centers, 1-3/4" Spacing Overall, and All Required Hardware

ORDER CODE	ADAPTS TO	LEFT WING	CENTER SECTION	RIGHT WING	EST. WEIGHT	LIST PRICE
17000817RS	5035-18	5’	8 ¾’	5’	1121	4,845.00
17000819RS	5035-20	5’	10 ¼’	5’	1176	4,911.00
17000821RS	5035-22	6 ½’	9 ½’	6 ½’	1265	5,026.00
17000823RS	5035-24	8’	8 ¾’	8’	1342	5,013.00
17000825RS	5035-26	8 ¾’	9 ½’	8 ¾’	1418	5,390.00
17000827RS	5035-28	9 ½’	9 ½’	9 ½’	1485	5,515.00
17000987RS	5035-30	9 ½’	11 ¾’	9 ½’	1628	6,188.00
17000988RS	5035-32	10 ¼’	12 ½’	10 ¼’	1704	6,496.00
17001132RS	5035-34	11’	12 ½’	11’	1923	7,302.00
17000566RS	5035-36	12 ½’	12 ½’	12 ½’	2051	7,528.00
17001561RS	5135-36	5’ & 7 ¼’	6 ½’ & 5’	7 ¼’ & 5’	2340	8,786.00
17001564RS	5135-38	6 ½’ & 7 ¼’	6 ½’ & 5’	7 ¼’ & 6 ½’	2370	9,660.00
17001567RS	5135-40	6 ½’ & 6 ½’	8’ & 6 ½’	6 ½’ & 6 ½’	2521	9,857.00
17001555RS	5135-42	7 ¼’ & 6 ½’	8’ & 6 ½’	6 ½’ & 7 ¼’	2605	9,976.00

5035 and 5135 SERIES THREE SECTION FIELD CULTIVATORS

FIVE ROW SPIKE DRAG (SPLIT SECTION) FOR SF5035

This Attachment Utilizes Smaller Sections and Will Not be as Aggressive as Spike Drags with Larger Sections
Five Rows of 3/4" x 11" Square Spikes on 9" Centers, 1-3/4" Spacing Overall
All Required Hardware and Mounting Brackets

ORDER CODE	ADAPTS TO	LEFT WING	CENTER SECTION	RIGHT WING	EST. WEIGHT	LIST PRICE
17001573RS	5035-30	9 ½'	6 ½' & 5 ½'	9 ½'	1756	6,546.00
17001574RS	5035-32	10 ¼'	6 ½' & 5 ½'	10 ¼'	1862	6,809.00
17001575RS	5035-34	10 ¼'	7 ¼' & 6 ½'	10 ¼'	2288	7,180.00
17001576RS	5035-36	5' & 6 ½'	7 ¼' & 6 ½'	6 ½' & 5'	2363	8,440.00

THREE ROW SPIKE DRAG AND FINISHING REEL FOR SF5035 and SF5135

All Required Hardware and Mounting Brackets
Three Rows of 3/4" x 11" Square Spikes on 9" Centers, 3" Spacing Overall
11" Diameter Reels with Six Spiral Blades and Two 1-3/4" Greaseable Bearings on Each Reel

ORDER CODE	ADAPTS TO	LEFT WING	CENTER SECTION	RIGHT WING	EST. WEIGHT	LIST PRICE
17000832RS	5035-18	5'	8 ¾'	5'	1525	8,649.00
17000834RS	5035-20	5'	10 ¼'	5'	1783	9,316.00
17000836RS	5035-22	6 ½'	9 ½'	6 ½'	1884	9,819.00
17000838RS	5035-24	8'	8 ¾'	8'	2051	10,679.00
17000840RS	5035-26	8 ¾'	9 ½'	8 ¾'	2230	10,999.00
17000842RS	5035-28	9 ½'	9 ½'	9 ½'	2416	12,278.00
17001004RS	5035-30	9 ½'	11 ¾'	9 ½'	2286	12,876.00
17001006RS	5035-32	10 ¼'	12 ½'	10 ¼'	2776	14,172.00
17001008RS	5035-34	11'	12 ½'	11'	2867	14,404.00
17001010RS	5035-36	12 ½'	11 ¾'	12 ½'	2931	14,509.00
17001651RS	5135-36	5' & 7 ¼'	11 ¾'	7 ¼' & 5'	3077	15,355.00
17001650RS	5135-38	7 ¼' & 6'	11 ¾'	6' & 7 ¼'	3264	15,994.00
17001649RS	5135-40	6 ½' & 6 ½'	14 ½'	6 ½' & 6 ½'	3441	16,599.00
17001648RS	5135-42	7 ¼' & 6 ½'	14 ½'	6 ½' & 7 ¼'	3570	17,674.00

NOTE: Rear Tow Hitches are not Available with 3 Row Spike and Reel.

5056 SERIES FIVE SECTION FIELD CULTIVATORS

F.O.B. Beloit, KS

STANDARD CONFIGURATION

4 New 12.5L x 15, GY - FI, Load Range F tubeless tires (Center Section - 45’ and 49’)
4 New 380/55R x 16.5 Tubeless Tire (Center Section 55', 59' & 63')
8 New 8 ply, 11L x 15 tubeless tires (Wings - 45’ to 63’)
4 15" x 10" Eight bolt wheels and hubs with triple lip seals (Center Section 45' and 49')
4 16.5" x 12" 8 Eight bolt wheels and hubs with triple lip seals (Center Section 55', 59' and 63')
8 5" x 10" Six bolt wheels and hubs with triple lip seals and grease zerks (Wings)
4 2 ¾" Diameter slip-in spindles (Center Section - 45' and 49')
4 3” Diameter slip-in spindles (Center Section - 55', 59' and 63')
8 2" Diameter slip-in spindles (Wings)
6 Walking beams with greaseable tapered roller bearings
4 Swivel type gauge wheels with 8.00 x 10 new tires and tubes, five bolt hubs and triple lip seals
1 Cast Single Lip Hitch, 2 ¾" hole, Cat V
Self-Leveling Hitch or (OPTIONAL) Floating Hitch
Single point front mounted depth stop
9" Plain cultivator sweeps (47º) on 6" spacing with 24” under frame clearance
Spring tension shank assemblies (190 lb. point load) or 2 piece S-tine shank assemblies (160 lb. point load)
Safety equipment including: light kit, SMV emblem, and safety chain
Minimum Horsepower Required - 6 HP per foot

MODEL NUMBER	TRANSPORT WIDTH	TRANSPORT HEIGHT
SF5056-45	17' 6"	12' 5"
SF5056-49	17' 6"	14' 5"
SF5056-55	19' 6"	14' 5"
SF5056-59	19' 6"	16' 6"
SF5056-63	19' 6"	16' 6"

These prices reflect the standard configuration. If items other than those listed in the standard configuration are ordered, then the quoted price below will change.
For Quotation Purposes Only – Please Order Items from the Groups on the Next Pages

MODEL NUMBER	CUTTING WIDTH	FRAME SIZES	NO. OF SHANKS	EST. WT.	LIST PRICE
SELF-LEVELING HITCH WITH SPRING TENSION SHANKS ON 6” SPACING					
SF5056-45	45' 0"	8' 8' 12' 8' 8'	91	17,677	72,652.00
SF5056-49	49' 0"	8' 10' 12' 10' 8'	99	18,508	76,081.00
SF5056-55	55' 0"	10' 10' 14' 10' 10'	111	20,336	85,173.00
SF5056-59	59' 0"	10' 12' 14' 12' 10'	119	21,074	88,601.00
SF5056-63	63' 0"	12' 12' 14' 12' 12'	127	21,823	92,029.00
SELF-LEVELING HITCH WITH 2-PIECE S-TINE SHANKS ON 6” SPACING					
SF5056-45	45' 0"	8' 8' 12' 8' 8'	91	16,585	69,558.00
SF5056-49	49' 0"	8' 10' 12' 10' 8'	99	17,320	72,715.00
SF5056-55	55' 0"	10' 10' 14' 10' 10'	111	19,004	81,399.00
SF5056-59	59' 0"	10' 12' 14' 12' 10'	119	19,646	84,555.00
SF5056-63	63' 0"	12' 12' 14' 12' 12'	127	20,299	87,711.00

SUNFLOWER

Mississippi State Contract Discount: 5%

5056 SERIES FIVE SECTION FIELD CULTIVATORS

ORDER CODE	DESCRIPTION	APPROX. WEIGHT (LBS)	LIST PRICE

Select One Order Code from Each Group, 01 through 08.

Group 01 Base Machine

SF5056-45	50564500, 91 Shank Field Cultivator, 45'	12,642	45,242.00
SF5056-49	50564900, 99 Shank Field Cultivator, 49'	13,145	47,375.00
SF5056-55	50565500, 111 Shank Field Cultivator, 55'	14,441	50,974.00
SF5056-59	50565900, 119 Shank Field Cultivator, 59'	15,179	53,106.00
SF5056-63	50566300, 127 Shank Field Cultivator, 63'	15,272	55,238.00

Group 02 Shanks - Order Quantity Indicated Above (5/8" x 1¾" Shank, 24" Vertical Clearance)

18749BS	Spring Tension Shank Assembly (190 lb Point Load)	37	149.00
12375BS	2 Piece S-Tine Shank Assembly (160 lb Point Load)	25	115.00

Group 03 Sweeps - Order 1 per Shank

1400161S	9" Plain Sweep (47 degree)	4	13.00

Group 04 Tires

Model Size	Center (Order Quantity)	Wings (Order Quantity)
45 & 49	5555YS (4)	3058YS or 3587YS (8)
55, 59 and 63	16949YS (4)	3058YS or 3587YS (8)

Center Tires

5555YS	New 12.5L, GY - FI (Load F) Tire, 8 Bolt Wheel (45' - 49')	100	518.00
16949YS	New 380/55R-16.5 Tubeless Tire, 8 Bolt Wheel (55' - 63')	110	839.00

Wing Tires

3058YS	New 8 Ply, 11L Tubeless Tire, 6 Bolt Wheel	65	319.00
3587YS	New 12 Ply, 11L Tire, 6 Bolt Wheel	74	350.00

Group 05 Center Section Lift Assemblies - Order 1

7500547RS	Walking Tandems 2 3/4" Spindles for 45' & 49'	295	2,613.00
7500544RS	Walking Tandems 3" Spindles for 55', 59' & 63'	850	4,878.00

Group 06 Wing Lift (Inner & Outer) Assemblies - Order 2

7500394RS	Walking Tandems 2" Spindles for 5056 Wing	192	1,772.00

Group 07 Tongue

7500546RS	Self-Leveling Tongue		1,647.00
7500540RS	Floating Tongue		3,732.00

Group 08 Tongue Hitch

16785RS	Cat V Single Lip Hitch, Adjustable for 2" or 2-3/4" Pin		240.00

5056 SERIES FIVE SECTION FIELD CULTIVATORS

ORDER CODE	DESCRIPTION	APPROX. WEIGHT (LBS)	LIST PRICE
OPTIONAL EQUIPMENT			
12603RS	Rear Tow Hitch with Hitch Slide and Ball Joint for 55'-63' . . . (Not available with Combo-Type Finishing Attachments, i.e. coil tine and reel)	415	1,961.00
18879RS	Rear Tow Hitch with Hitch Slide and Ball Joint for 45' and 49' . (Not available with Combo-Type Finishing Attachments, i.e. coil tine and reel)	415	1,896.00
2500140RS	Hydraulic Tow Package. . . . . Hoses to Accommodate 7200 Series Soil Conditioner	26	406.00
12634PLS	Wiring Harness to Plug Soil Conditioner Lights into . . . . . Implement Lights		223.00

FOUR ROW HIGH RESIDUE SPIKE DRAG

Four Rows of 3/4” x 15" Round Teeth on 3" Overall Spacing, 12" Spacing on Each Row, and All Required Hardware

ORDER CODE	ADAPTS TO	OUTER WING	INNER WING	CENTER SECTION	EST. WEIGHT	LIST PRICE
17001794RS	5056-45	9’	8’	13’	2458	8,868.00
17001793RS	5056-49	9’	10’	13’	2458	9.367.00
17001792RS	5056-55	11’	10’	15’	2829	10,205.00
17001791RS	5056-59	11’	12’	15’	2829	10,534.00
17001786RS	5056-63	13’	13’	13’	2829	10,882.00

FIVE ROW SPIKE DRAG (SINGLE SECTION)

Five Rows of 3/4" x 11" Square Spikes on 9" Centers, 1-3/4" Spacing Overall
All Required Hardware and Mounting Brackets

ORDER CODE	ADAPTS TO	OUTER WING	INNER WING	CENTER SECTION	EST. WEIGHT	LIST PRICE
17001802RS	5056-45	8’	8’	12 ½’	2553	9,272.00
17001801RS	5056-49	8’	10 ¼’	11 ¾’	2693	9,976.00
17001800RS	5056-55	11’	10 ¼’	7 ¼’ & 5 ½’	2875	11,523.00
17001799RS	5056-59	11’	11 ¾’	8’ & 5 ½’	3367	12,664.00
17001790RS	5056-63	12 ½’	12 ½’	7 ¼’ & 5 ½’	3506	12,942.00

FIVE ROW SPIKE DRAG (SPLIT SECTION)

This Attachment Utilizes Smaller Sections and Will Not be as Aggressive as Spike Drags with Larger Sections

Five Rows of 3/4" x 11" Square Spikes on 9" Centers, 1-3/4" Spacing Overall
All Required Hardware and Mounting Brackets

ORDER CODE	ADAPTS TO	OUTER WING	INNER WING	CENTER SECTION	EST. WEIGHT	LIST PRICE
17001806RS	5056-45	8’	8’	5 ½’ & 6 ½’	2547	9,661.00
17001805RS	5056-49	8’	10 ¼’	5 ½’ & 5 ½’	2687	10,389.00
17001804RS	5056-55	5’ & 5 ½’	10 ¼’	7 ¼’ & 5 ½	2850	12,893.00
17001803RS	5056-59	5’ & 5 ½’	6 ½’ & 4 ¼’	8’ & 7 ¼’	3725	14,907.00
17001789RS	5056-63	5 ½’ & 6 ½’	5 & 6 ½’’	8’ & 5 ½’	3865	15,113.00

5056 SERIES FIVE SECTION FIELD CULTIVATORS

THREE ROW SPIKE DRAG AND FINISHING REEL

All Required Hardware and Mounting Brackets
Three Rows of 3/4" x 11" Square Spikes on 9" Centers, 3" Spacing Overall
11" Diameter Reels with Six Spiral Blades and Two 1-3/4" Greaseable Bearings on Each Reel

ORDER CODE	ADAPTS TO	LEFT WING	CENTER SECTION	RIGHT WING	EST. WEIGHT	LIST PRICE
17001814RS	5056-45	8' & 8'	12 ½'	8' & 8'	3922	20,765.00
17001813RS	5056-49	8' & 10 ¼'	11 ¾'	8' & 10 ¼'	4070	23,230.00
17001812RS	5056-55	10 ¼' & 11'	13 ¼'	10 ¼' & 11'	4338	23,526.00
17001811RS	5056-59	10' & 12 ½'	14'	10' & 12 ½'	4734	24,747.00
17001785RS	5056-63	12 ½' & 12 ½'	13 ¼'	12 ½' & 12 ½'	5081	26,670.00

NOTE: Rear Tow Hitches are not Available with 3 Row Spike and Reel.

THREE ROW COIL TINE FINISHING HARROWS

Spring Loaded Drag Arms with all Required Hardware and Mounting Brackets
Three Rows of 3/8" x 16" Coil Tines on 7½" Centers, 2½" Spacing Overall, with Angle Adjustment and Backup Protection
15" Spacing Between Rows

ORDER CODE	ADAPTS TO	OUTER WING	INNER WING	CENTER SECTION	EST. WEIGHT	LIST PRICE
17001798RS	5056-45	97 ½"	82 ½"	97 ½" & 52 ½"	1442	7,792.00
17001797RS	5056-49	97 ½"	52 ½" & 52 ½"	67 ½" & 67 ½"	1584	8,457.00
17001796RS	5056-55	52 ½" & 67 ½"	52 ½" & 52 ½"	82 ½" & 67 ½"	1848	9,528.00
17001795RS	5056-59	52 ½" & 67 ½"	52 ½" & 67 ½"	97 ½" & 67 ½"	2050	10,632.00
17001787RS	5056-63	52 ½" & 82 ½"	52 ½" & 82 ½"	67 ½" & 82 ½"	2091	10,816.00

THREE ROW COIL TINE AND FINISHING REEL

Spring Loaded Drag Arms with all Required Hardware and Mounting Brackets
Three Rows of 3/8" x 16" Coil Tines on 7½" Centers, 2½" Spacing Overall, with Angle Adjustment and Backup Protection
11" Diameter Reels with Five Spiral Blades and Two 1-3/4" Greaseable Bearings on Each Reel

ORDER CODE	ADAPTS TO	OUTER WING	INNER WING	CENTER SECTION	EST. WEIGHT	LIST PRICE
17001810RS	5056-45	97 ½"	82 ½"	97 ½" & 52 ½"	3725	21,959.00
17001809RS	5056-49	97 ½"	52 ½" & 52 ½"	67 ½" & 67 ½"	3869	23,748.00
17001808RS	5056-55	52 ½" & 67 ½"	52 ½" & 52 ½"	82 ½" & 67 ½"	4614	24,805.00
17001807RS	5056-59	52 ½" & 67 ½"	52 ½" & 67 ½"	97 ½" & 67 ½"	4876	27,085.00
17001788RS	5056-63	52 ½" & 82 ½"	52 ½" & 82 ½"	67 ½" & 82 ½"	5002	28,511.00

RESERVED

FACTORY OR DEALERSHIP ASSEMBLY AMOUNTS ON 6000 SERIES
(DISCOUNTS DO NOT APPLY)

The factory or dealership set-up amounts will be charged for machines set-up by Sunflower. Set-up amounts are the same whether machines are shipped via our truck (gangs off wings, etc.) or set-up completely and picked up by dealer's truck. Factory assembly charge includes hydraulic hose, hydraulic oil, and tips (hydraulic system is charged). Dealer location assembly charge includes hydraulic hose, and tips. (Hydraulic oil is not included) See note below.

Please Note: SF6630 Set-up rates include reel set-up. SF6631 and SF6650 does not include reel set-up.

MODEL NUMBER	FACTORY ORDER CODE	FACTORY SET-UP RATE	DEALER LOCATION ORDER CODE	DEALER LOCATION SET-UP RATE
SF6221-17 ♦	SET0152S	**1,365.00**	SET0152DS	**1,430.00**
SF6221-20 ♦	SET0153S	**1,442.00**	SET0153DS	**1,510.00**
SF6333-22 ♦	SET0154S	**1,516.00**	SET0154DS	**1,588.00**
SF6333-25 ♦	SET0155S	**1,591.00**	SET0155DS	**1,667.00**
SF6333-28 ♦	SET0156S	**1,667.00**	SET0156DS	**1,747.00**
SF6333-31 ♦	SET0157S	**2,180.00**	SET0157DS	**2,284.00**
SF6333-34 ♦	SET0158S	**2,266.00**	SET0158DS	**2,374.00**
SF6333-37 ♦	SET0159S	**2,444.00**	SET0159DS	**2,561.00**
SF6433-37 ♦	SET0160S	**3,316.00**	SET0160DS	**3,474.00**
SF6433-40 ♦	SET0161S	**3,410.00**	SET0161DS	**3,573.00**
SF6433-43 ♦	SET0162S	**3,506.00**	SET0162DS	**3,673.00**
SF6630-21 ♦	SET0219S	**1,562.00**	SET0219DS	**1,637.00**
SF6630-24 ♦	SET0220S	**1,751.00**	SET0220DS	**1,835.00**
SF6630-27 ♦	SET0221S	**1,941.00**	SET0221DS	**2,034.00**
SF6630-29 ♦	SET0222S	**2,067.00**	SET0222DS	**2,166.00**
SF6630-32 ♦	SET0223S	**2,256.00**	SET0223DS	**2,364.00**
SF6631-21	SET0018S	**1,137.00**	SET0018DS	**1,191.00**
SF6631-24	SET0019S	**1,232.00**	SET0019DS	**1,290.00**
SF6631-27	SET0020S	**1,327.00**	SET0020DS	**1,390.00**
SF6631-29	SET0021S	**1,365.00**	SET0021DS	**1,430.00**
SF6631-31	SET0022S	**1,527.00**	SET0022DS	**1,599.00**
SF6631-33	SET0023S	**1,649.00**	SET0023DS	**1,727.00**
SF6631-36	SET0024S	**1,800.00**	SET0024DS	**1,885.00**
SF6631-35 ♦	SET0225S	**2,840.00**	SET0225DS	**2,976.00**
SF6631-40 ♦	SET0226S	**2,945.00**	SET0226DS	**3,086.00**
SF6650-48	SET0218S	**4,249.00**	SET0218DS	**4,452.00**
♦ Frames are over-width and will require special handling and/or permits.				
Hydraulic (Lift, Self Leveler or Fold Kit) 6631	SET0031S	**47.00**	SET0031DS	**50.00**
C-Flex Bearing Shield 6630/6631 VT	N/A	N/A	SET0228DS	**7.00 ea.**
Finishing Reels	SET0227S	**11.00 per foot**	SET0227DS	**12.00 per foot**
Hydraulic Disc Gang Adjustment, Add	SET0164S	**21.00 per foot**	SET0164DS	**22.00 per foot**
Hydraulic Self Leveling for 6630 & 6631	SET0224S	**50.00 per foot**	SET0224DS	**52.00 per foot**
Six Row Spike Drag	SET0164S	**21.00 per foot**	SET0164DS	**22.00 per foot**
Three Row Spike and Reel	SET0165S	**21.00 per foot**	SET0165DS	**22.00 per foot**
Three Row Tine and Reel	SET0166S	**24.00 per foot**	SET0166DS	**25.00 per foot**
Four Row Coil Tine Harrow	SET0217S	**22.00 per foot**	SET0217DS	**23.00 per foot**

SUNFLOWER RECOMMENDS THESE SET-UP FIGURES BE USED BY DEALERS WHEN TRANSFERRING EQUIPMENT

Dealership Assembly requirements:

1. The dealership assembly service must be ordered separately from the implement. (initiates scheduling of service) Please order dealership assembly service from the field installed options tab in e-ordering.
2. Include in the dealership assembly order request the order and/or invoice number of the implement to be assembled.
3. Dealer supplies hydraulic oil (oil is not included).
4. Dealer supplies a fork lift of sufficient size to be used by AGCO's assembly crew.

6000 SERIES LAND FINISHERS

F.O.B. Beloit, KS

STANDARD CONFIGURATION

All 6000 Series

Tongue Jack (Front)
Disc Gang Reels and Mechanical Disc Gang Depth Adjustment
1-3/4" Gang Shafts with Triple Sealed Greaseable Bearings
19.69" Low Concavity Disc Blades, 6 Gauge or 1/4" Thick with 7-1/2" Spacing and Steel Spools
10” Plain Sweeps (47°) on 9” Spacing with 24” Under Frame Clearance
Spring Tension Shank Assemblies (190 lb. Point Load) or 2 Piece S-tine Shank (160 lb. Point Load)
Rephasing Lift System with Front Mounted Single Point Depth Control
Warning Light Kit, Complete with Wiring to Tractor and an SMV Emblem

Model 6221

6 New 12 Ply, 11L x 15 Tires
6 15" x 10" Six Bolt Wheels and Hubs with 2" Spindles and Triple Lip Seals
3 Walking Beams with Greaseable Tapered Roller Bearings
Adjustable Hitch with Cylinder and Hoses for Centering Tongue in Transport
Cast Single Lip Hitch with 1-7/8" Oblong Hole (7921RS)

Model 6333

4 New 11L x 15 (GY - FI, Load Range F) Tubeless Tires on Center Section; 22-28
4 New 12.5L x 15 (GY - FI, Load Range F) Tubeless Tires on Center Section; 31-37
4 New 8 Ply, 11L x 15 Tubeless Tires on Wings (22’-28’), 12 Ply, 12.5L x 15 on Wings (31’-37’)
4 15" x 10" Eight Bolt Wheels and Hubs with 2-1/4" Spindles and Triple Lip Seals on Center (22'-28')
4 15" x 10" Eight Bolt Wheels and Hubs with 2-3/4” Spindles and Triple Lip Seals on Center (31'-37')
4 15" x 10" Six Bolt Wheels and Hubs with 2" Spindles and Triple Lip Seals on Wings
4 Walking Beams with Greaseable Tapered Roller Bearings
1 Cast Single Lip Hitch with an 1-7/8" Oblong Hole (22’-28’, 7921RS)
1 Cast Single Lip Hitch with an 2” Pin Oblong Hole (31’-37’)

Model 6433 SW

4 New 380/55RX16.5 Wheel and Tire Assembly (Center)
4 New 12 Ply, 12.5L x 15 Tubeless Tires (Wings)
4 15" x 10" Eight Bolt Wheels and Hubs with 2-3/4" Spindles and Triple Lip Seals (Center)
4 15" x 10" Six Bolt Wheels and Hubs with 2" Spindles and Triple Lip Seals (Wings)
4 Walking Beams with Greaseable Tapered Roller Bearings
1 Cast Single Lip Hitch with an 2” Pin Oblong Hole

MODEL NUMBER	SWEEP CUT-TING WIDTH	DISC CUTTING WIDTH	NO. OF SHANKS	NO. OF DISCS	TRANSPORT HEIGHT	TRANSPORT WIDTH
SF6221-17♦	17’ 4"	17’ 5"	23	28	11’ 6"	13’ 6"
SF6221-20♦	20’ 4"	21’ 0"	27	34	13’ 1"	15’ 4"
SF6333-22♦	21’ 9"	22’ 10"	29	36	11’ 0"	13’ 4"
SF6333-25♦	24’ 9"	25’ 2"	33	40	12’ 4"	13’ 4"
SF6333-28♦	27’ 9"	29’ 0"	37	46	14’ 2"	13’ 4"
SF6333-31♦	30’ 9"	31’ 6"	41	50	14’ 1"	14’ 6"
SF6333-34♦	33’ 9"	34’ 1"	45	54	14’ 0"	17’ 6"
SF6333-37♦	36’ 9"	36’ 7"	49	58	15’ 1"	17’ 6"
SF6433-37 SW♦	36’ 9”	37’ 3”	49	58	14’ 0”	14’ 6”
SF6433-40 SW♦	39’ 9"	40’ 4"	53	64	14’ 0"	17’ 6"
SF6433-43 SW♦	42’ 9"	42’ 9"	57	68	14’ 0"	17’ 6"

♦ Frames are over-width and will require special handling and/or permits.

Mississippi State Contract Discount: 5%

6000 SERIES LAND FINISHERS

These prices reflect the standard configuration. If items other than those listed in the standard configuration are ordered, then the quoted price below will change.

For Quotation Purposes Only – Please Order Items from the Groups on the Next Pages

Prices below are listed less Finishing Attachment – See Page 6000-09

WITH SPRING TENSION SHANKS

MODEL NUMBER	SWEEP CUTTING WIDTH	DISC GANG REEL WT.*	DISC GANG REEL PRICE *	EST. WT.	LIST PRICE 19.69" 6 GAUGE BLADES	LIST PRICE 19.69" ¼" THICK BLADES
SF6221-17	17’ 4"	390	1,617.00	8772	39,209.00	39,387.00
SF6221-20	20’ 4"	455	1,902.00	9315	41,923.00	42,181.00
SF6333-22	21’ 9"	550	2,093.00	12250	48,833.00	49,189.00
SF6333-25	24’ 9"	625	2,377.00	12932	51,930.00	52,316.00
SF6333-28	27’ 9"	700	2,663.00	14135	57,909.00	58,344.00
SF6333-31	30’ 9"	775	2,949.00	15970	68,073.00	68,554.00
SF6333-34	33’ 9"	850	3,235.00	16895	73,679.00	74,228.00
SF6333-37	36’ 9"	925	3,519.00	17290	75,698.00	76,312.00
SF6433-37 SW	36’ 9”	925	3,519.00	21175	86,306.00	86,920.00
SF6433-40 SW	39’ 9”	1000	3,805.00	22100	90,309.00	91,095.00
SF6433-43 SW	42’ 9”	1075	4,091.00	22500	92,362.00	93,214.00
		⇧	⇧			

**** Deduct Disc Gang Reel Price and Weight If Not Wanted***
See Page 6000-11 for Separate Disc Gang Reel Pricing
The Above Prices Are for Deduction Only

WITH S-TINE SHANKS

SF6221-17	17’ 4"	390	1,617.00	8496	38,427.00	38,605.00
SF6221-20	20’ 4"	455	1,902.00	8991	41,005.00	41,263.00
SF6333-22	21’ 9"	500	2,093.00	11902	47,847.00	48,203.00
SF6333-25	24’ 9"	575	2,377.00	12535	50,808.00	51,194.00
SF6333-28	27’ 9"	650	2,663.00	13690	56,651.00	57,086.00
SF6333-31	30’ 9"	750	2,949.00	15477	66,679.00	67,160.00
SF6333-34	33’ 9"	825	3,235.00	16354	72,149.00	72,698.00
SF6333-37	36’ 9"	900	3,519.00	16701	74,032.00	74,646.00
SF6433-37 SW	36’ 9”	925	3,519.00	19131	84,640.00	85,254.00
SF6433-40 SW	39’ 9”	1000	3,805.00	21463	88,507.00	89,293.00
SF6433-43 SW	42’ 9”	1075	4,091.00	21815	90,424.00	91,276.00
		⇧	⇧			

**** Deduct Disc Gang Reel Price and Weight If Not Wanted***
See Page 6000-11 for Separate Disc Gang Reel Pricing
The Above Prices Are for Deduction Only

6000 SERIES LAND FINISHERS

ORDER CODE	DESCRIPTION	APPROX. WEIGHT (LBS)	LIST PRICE

Select One Order Code from Each Group, 01 through 09.
Also Order Harrows from Page 6000-9

Group 01 Base Machine

SF6221-17	62211700, 23 Shank Land Finisher, 17'	3925	22,407.00
SF6221-20	62212000, 27 Shank Land Finisher, 20'	3973	23,240.00
SF6333-22	63332200, 29 Shank Land Finisher, 22'	7774	24,640.00
SF6333-25	63332500, 33 Shank Land Finisher, 25'	8163	24,865.00
SF6333-28	63332800, 37 Shank Land Finisher, 28'	8851	29,391.00
SF6333-31	63333100, 41 Shank Land Finisher, 31'	10053	36,157.00
SF6333-34	63333400, 45 Shank Land Finisher, 34'	10673	37,960.00
SF6333-37	63333700, 49 Shank Land Finisher, 37'	10561	38,819.00
SF6433-37 SW	64333700, Split Wing, 49 Shank Land Finisher, 37'	13200	48,787.00
SF6433-40 SW	64334000, Split Wing, 53 Shank Land Finisher, 40'	13700	50,648.00
SF6433-43 SW	64334300, Split Wing, 57 Shank Land Finisher, 43'	14200	51,340.00

Group 02 Shanks **Order Quantity Indicated Above**

5/8" x 1¾" Shank, 24" Vertical Clearance

18749BS	Spring Tension Shank Assembly (190 lb Point Load)	37	149.00
12375BS	2 Piece S-Tine Shank Assembly (160 lb Point Load)	25	115.00

Group 03 Sweeps **Order 1 per Shank**

1400009S	10" Plain Sweeps (47º)	4	16.00

Group 04 Disc Gang Reels

17001658RS	Disc Gang Reel for SF6221-17	390	1,617.00
17001659RS	Disc Gang Reel for SF6221-20	455	1,902.00
17001637RS	Disc Gang Reel for SF6333-22	550	2,093.00
17001638RS	Disc Gang Reel for SF6333-25	625	2,377.00
17001639RS	Disc Gang Reel for SF6333-28	700	2,663.00
17001622RS	Disc Gang Reel for SF6333-31	775	2,949.00
17001629RS	Disc Gang Reel for SF6333-34	850	3,235.00
17001630RS	Disc Gang Reel for SF6333-37	925	3,519.00
17001666RS	Disc Gang Reel for SF6433-37	925	3,519.00
17001602RS	Disc Gang Reel for SF6433-40	1000	3,805.00
17001601RS	Disc Gang Reel for SF6433-43	1075	4,091.00

6000 SERIES LAND FINISHERS

ORDER CODE	DESCRIPTION	APPROX. WEIGHT (LBS)	LIST PRICE

Select One Order Code from Each Group, 01 through 09.

Group 05 Gangs 19.69“ LOW CONCAVITY BLADES ON 7½” SPACING & STEEL SPOOLS

SF6221-17			
12301544S	19.69” 4 Gauge.		4,623.00
12301545S	19.69" 6 Gauge		4,445.00
SF6221-20			
12301546S	19.69” 4 Gauge.		5,639.00
12301547S	19.69" 6 Gauge		5,381.00
SF6333-22			
12301526S	19.69” 4 Gauge.	988	7,005.00
12301529S	19.69" 6 Gauge	988	6,649.00
SF6333-25			
12301527S	19.69” 4 Gauge.	1042	8,963.00
12301530S	19.69" 6 Gauge	1042	8,577.00
SF6333-28			
12301528S	19.69” 4 Gauge.	1317	9,519.00
12301531S	19.69" 6 Gauge	1317	9,084.00
SF6333-31			
12301520S	19.69” 4 Gauge.	1416	10,039.00
12301521S	19.69" 6 Gauge	1416	9,558.00
SF6333-34			
12301522S	19.69” 4 Gauge.	1482	12,237.00
12301523S	19.69" 6 Gauge	1482	11,688.00
SF6333-37			
12301524S	19.69” 4 Gauge.	1605	12,518.00
12301525S	19.69" 6 Gauge	1605	11,904.00
SF6433-37 SW			
12301548S	19.69” 4 Gauge.	1605	12,518.00
12301549S	19.69" 6 Gauge	1605	11,904.00
SF6433-40 SW			
12301518S	19.69” 4 Gauge.	3909	12,393.00
12301519S	19.69" 6 Gauge	3604	11,607.00
SF6433-43 SW			
12301516S	19.69” 4 Gauge.	4093	12,874.00
12301517S	19.69" 6 Gauge	3768	12,022.00

6000 SERIES LAND FINISHERS

ORDER CODE	DESCRIPTION	APPROX. WEIGHT (LBS)	LIST PRICE

Select One Order Code from Each Group, 01 through 09.

Group 06 Disc Gang Adjustment

SF6221			
7500431RS	Standard Disc Gang Option	150	1,188.00
7500432RS	Hydraulic Disc Gang Adjustment	320	3,192.00
SF6333-22' and 25'			
7500424RS	Standard Disc Gang Option	190	1,483.00
7500421RS	Hydraulic Disc Gang Adjustment	840	4,809.00
SF6333-28'			
7500424RS	Standard Disc Gang Option	190	1,483.00
7500425RS	Hydraulic Disc Gang Adjustment	650	4,809.00
SF6333-31'			
7500416RS	Standard Disc Gang Option	247	2,080.00
7500417RS	Hydraulic Disc Gang Adjustment	1250	6,381.00
SF6333-34'			
7500416RS	Standard Disc Gang Option	247	2,080.00
7500401RS	Hydraulic Disc Gang Adjustment	1250	6,381.00
SF6333-37'			
7500422RS	Standard Disc Gang Option	306	2,080.00
7500423RS	Hydraulic Disc Gang Adjustment	1250	6,381.00
SF6433-37'			
7500435RS	Standard Disc Gang Option	330	2,227.00
7500436RS	Hydraulic Disc Gang Adjustment	1055	8,602.00
SF6433-40' and 43'			
7500406RS	Standard Disc Gang Option	396	2,523.00
7500407RS	Hydraulic Disc Gang Adjustment	1130	8,897.00

6000 SERIES LAND FINISHERS

ORDER CODE	DESCRIPTION	APPROX. WEIGHT (LBS)	LIST PRICE

Select One Order Code from Each Group, 01 through 09.

Group 07 Tires

MODEL SIZE	ORDER QUANTITY	
	CENTERS	WINGS
SF6221	(4) 3587YS	(2) 3587YS
SF6333 22' through 28	(4) 5552YS	(4) 3058YS
SF6333 31' through 37'	(4) 5579YS	(4) 3588S
SF6433 SW 37' through 43'	(4) 16949YS	(4) 3588S

3587YS	(1) New 12 Ply, 11L Tubeless Tire, 6 Bolt Wheel	74	350.00
3058YS	(1) New 8 Ply, 11L Tubeless Tire, 6 Bolt Wheel	65	319.00
5552YS	(1) New 11L x 15 (GY - FI) Load Range F Tubeless Tire . . . 8 Bolt Wheel (15" x 10")	85	449.00
3588S	(1) New 12 Ply, 12.5L x 15 Tubeless Tire . . . . . 6 Bolt Wheel (15" x 10")	80	367.00
5579YS	(1) New 12.5L, GY - FI, Load Range F Tire, 8 Bolt Wheel, . . (2-3/4" Spindle)	110	534.00
16949YS	(1) New 380/55R-16.5 Tubeless Tire, 8 Bolt Wheel	110	839.00

Group 08 Lift Assemblies

SF6221

7500434RS	Two Standard Walking Tandems	985	3,497.00

SF6333-22' through 28'

7500420RS	Two Heavy Duty and Two Standard Walking Tandems	930	5,951.00

SF6333-31'

7500418RS	Two Heavy Duty and Two Standard Walking Tandems	1008	6,960.00

SF6333-34' and 37'

7500419RS	Two Heavy Duty and Two Standard Walking Tandems	1008	7,687.00

SF6433-37'

7500437RS	Two Heavy Duty and Two Standard Walking Tandems	1008	6,960.00

SF6433-40' and 43'

7500400RS	Two Heavy Duty and Two Standard Walking Tandems	1587	8,157.00

6000 SERIES LAND FINISHERS

ORDER CODE	DESCRIPTION	APPROX. WEIGHT (LBS)	LIST PRICE

Select One Order Code from Each Group, 01 through 09.

Group 09 Hitches for SF 6221 and SF 6333-22' through 28' Only

SF6221

7921RS	Cast Single Lip Hitch with 1-7/8" Pin Hole	29	160.00
7960RS	Double Lip Hitch with 1-7/8" Pin Hole	29	160.00
7924RS	Double Lip Hitch with 1-9/16" Pin Hole	29	160.00

SF 6333-22' through 28

7921RS	Cast Single Lip Hitch with 1-7/8" Pin Hole	29	160.00
6933RS	Cast Single Lip Hitch 2" Pin Hole	29	160.00
7960RS	Double Lip Hitch with 1-7/8" Pin Hole	29	160.00

OPTIONAL EQUIPMENT - For Current Machines ONLY

Rear Tow Hitches with Hitch Slide & Ball Joint

13017RS	Rear Tow Hitch For SF6221	415	1,576.00
12632RS	Rear Tow Hitch For SF6333-22 through 28'	415	2,782.00
12616RS	Rear Tow Hitch For SF6333-31 and 6433-37	415	2,782.00
12617RS	Rear Tow Hitch For SF6333-34 and 37' and 6433-40 and 43'	415	2,948.00

Hydraulic Tow Package – Hoses to Accommodate 7200 Series Soil Conditioner

2500144RS	SF6333-22 through 28'		446.00
2500143RS	SF6221 and SF6333-31 through 6433-43'	26	446.00
12634PLS	Wiring Harness to Plug Soil Conditioner Lights into Implement Lights		223.00
18663BS	Gang Wrench, 2-3/4"	35	89.00

ATTACHMENTS FOR 6000 SERIES LAND FINISHERS

SIX ROW HIGH RESIDUE SPIKE DRAG

Six Rows of 3/4” x 16" Round Teeth on 2.2" Overall Spacing
12" Spacing Each Row for the First Four Bars, and 9" Spacing Each Row for the Last Two Bars
All Required Hardware

ORDER CODE	ADAPTS TO	LEFT WING	CENTER SECTION	RIGHT WING	EST. WEIGHT	LIST PRICE
17001660RS	SF6221-17	8’	11’		943	6,763.00
17001661RS	SF6221-20	9’	12 ½’		993	7,045.00
17001640RS	SF6333-22	7’	8 ½’	7’	1765	8,358.00
17001641RS	SF6333-25	8 ½’	8 ½’	8 ½’	2007	8,505.00
17001642RS	SF6333-28	10’	8 ½’	10’	2247	9,279.00
17001624RS	SF6333-31	11 ½’	8 ½’	11 ½’	2488	10,034.00
17001627RS	SF6333-34	10 ¼’	14’	10 ¼’	2729	10,131.00
17001628RS	SF6333-37	11 ¾’	14’	11 ¾’	2970	10,415.00
17001668RS	SF6433-37	6’ & 7’	8 ½’	7’ & 6’	3210	10,930.00
17001604RS	SF6433-40	6’ & 7’	14’	7’ & 6’	3210	11,358.00
17001603RS	SF6433-43	7’ 6” & 7’	14’	7’ & 7’ 6”	3450	11,570.00

THREE ROW SPIKE DRAG AND FINISHING REEL

Spring Loaded Drag Arms with all Required Hardware and Mounting Brackets
Three Rows of 3/4" x 11" Square Spikes on 9" Centers, 3" Spacing Overall
11" Diameter Reels with Six Spiral Blades and Two 1-3/4" Greaseable Bearings on Each Reel

ORDER CODE	ADAPTS TO	LEFT WING	CENTER SECTION	RIGHT WING	EST. WEIGHT	LIST PRICE
17001662RS	SF6221-17	7 ¼’	4 ½’ & 6 ½’		1385	7,653.00
17001663RS	SF6221-20	8’	4 ½’ & 8’		1511	8,606.00
17001634RS	SF6333-22	7 ¼'	8’	7 ¼'	1639	9,248.00
17001635RS	SF6333-25	8 ¾’	8’	8 ¾’	1863	11,000.00
17001636RS	SF6333-28	10 ¼'	8’	10 ¼'	2086	13,306.00
17001623RS	SF6333-31	11’	9 ½'	11’	2310	14,749.00
17001625RS	SF6333-34	11’	12 ½’	11’	2533	15,278.00
17001626RS	SF6333-37	12 ½’	12 ½'	12 ½’	2757	15,725.00
17001667RS	SF6433-37	5’ & 8’	9 ½'	8’ & 5’	3210	16,447.00
17001606RS	SF6433-40	5’ & 8’	6 ½’ & 6 ½’	8’ & 5’	3695	17,604.00
17001605RS	SF6433-43	6 ½’ & 8’	6 ½’ & 6 ½’	8’ & 6 ½’	3840	17,960.00

ATTACHMENTS FOR 6000 SERIES LAND FINISHERS

THREE ROW COIL TINE AND FINISHING REEL

Spring Loaded Drag Arms with all Required Hardware and Mounting Brackets
Three Rows of 3/8" x 16" Coil Tines with Angle Adjustment & Backup Protection
11" Diameter Reels with Six Spiral Blades and Two 1-3/4" Greaseable Bearings on Each Reel
Independent Operating and Adjustable Tine and Reel Sections

ORDER CODE	ADAPTS TO	LEFT WING	CENTER SECTION	RIGHT WING	EST. WEIGHT	LIST PRICE
17001664RS	6221-17	82 ½”	52 ½” & 67 ½”		1828	9,817.00
17001665RS	6221-20	97 ½”	52 ½” & 97 ½”		1979	10,913.00
17001643RS	6333-22	82 ½”	97 ½”	82 ½”	2070	11,364.00
17001644RS	6333-25	97 ½”	97 ½”	97 ½”	2356	12,851.00
17001645RS	6333-28	52 ½” & 52 ½”	97 ½”	52 ½” & 52 ½”	2386	15,447.00
17001631RS	6333-31	52 ½” & 67 ½”	52 ½” & 52 ½”	67 ½” & 52 ½”	2512	16,923.00
17001632RS	6333-34	52 ½” & 67 ½”	67 ½” & 67 ½”	67 ½” & 52 ½”	3378	17,245.00
17001633RS	6333-37	67 ½” & 67 ½”	67 ½” & 67 ½”	67 ½” & 67 ½”	3528	17,680.00
17001767RS	6433-37	67 ½” & 82 ½”	52 ½” & 52 ½”	82 ½” & 67 ½”	3460	18,332.00
17001768RS	6433-40	67 ½” & 82 ½”	82 ½” & 67 ½”	82 ½” & 67 ½”	3650	19,195.00
17001699RS	6433-43	82 ½” & 82 ½”	82 ½” & 67 ½”	82 ½” & 82 ½”	4100	20,643.00

CHOPPER REEL & THREE ROW SPIKE DRAG

All Required Hardware and Mounting Brackets
Two Trunnion Bearings per Reel
16" Diameter Reel with Offset Chopper Blades in 15" Lengths
Three Rows of 3/4" x 11" Square Spikes on 1-3/4" Centers
Rear Jack

ORDER CODE	ADAPTS TO	LEFT WING	CENTER SECTION	RIGHT WING	EST. WEIGHT	LIST PRICE
17001708RS	6221-17	7¼'	11 ¾'		2635	11,433.00
17001709RS	6221-20	8'	12 ½'		3100	12,114.00
17001710RS	6333-22	6 ½'	9 ½'	6 ½'	3410	14,062.00
17001711RS	6333-25	8'	9 ½'	8'	3875	14,803.00
17001712RS	6333-28	9 ½'	9 ½'	9 ½'	4340	19,480.00
17001713RS	6333-31	11'	10 ¼'	11'	4805	20,778.00
17001714RS	6333-34	11'	6 ½' & 6 ½'	11'	5270	23,136.00
17001715RS	6333-37	11 ¾'	6 ½' & 6 ½'	11 ¾'	5735	23,593.00
17001716RS	6433-37	5 ¾' & 5 ¾'	6 ½' & 6 ½'	5 ¾' & 5 ¾'	5735	21,942.00
17001717RS	6433-40	5 ¾' & 7 ¼'	6 ½' & 6 ½'	7 ¼' & 5 ¾'	6200	24,425.00
17001718RS	6433-43	6 ½' & 7 ¼'	6 ½' & 6 ½'	7 ¼' & 6 ½'	6665	23,594.00

FOUR ROW COIL TINE HARROW

Spring Loaded Drag Arms with all Required Hardware and Mounting Brackets
Four Rows of 3/8" x 16" Coil Tines on 7-1/2" Centers, 1.88" Spacing Overall, with Angle Adjustment and Backup Protection 15" Spacing Between Rows

ORDER CODE	ADAPTS TO	LEFT WING	CENTER SECTION	RIGHT WING	EST. WEIGHT	LIST PRICE
17001669RS	6433-37	67 ½” 82 ½”	52 ½” 52 ½”	82 ½” 67 ½”	1649	8,152.00
17001608RS	6433-40	67 ½” 82 ½”	82 ½” 67 ½”	82 ½” 67 ½”	1832	8,474.00
17001607RS	6433-43	82 ½” 82 ½”	82 ½” 67 ½”	82 ½” 82 ½”	1954	8,596.00

Mississippi State Contract Discount: 5%

ATTACHMENTS FOR 6000 SERIES LAND FINISHERS

ORDER CODE	DESCRIPTION	APPROX. WEIGHT (LBS)	LIST PRICE
ATTACHMENTS FOR 6000 SERIES LAND FINISHERS DISC GANG REELS ** (For Field Installation)			
17001658RFS	Disc Gang Reel for SF6221-17	390	4,569.00
17001659RFS	Disc Gang Reel for SF6221-20	455	5,372.00
17001637RFS	Disc Gang Reel for SF6333-22	550	5,446.00
17001638RFS	Disc Gang Reel for SF6333-25	625	6,257.00
17001639RFS	Disc Gang Reel for SF6333-28	700	6,318.00
17001622RFS	Disc Gang Reel for SF6333-31	775	6,682.00
17001629RFS	Disc Gang Reel for SF6333-34	850	7,514.00
17001630RFS	Disc Gang Reel for SF6333-37	925	7,554.00
17001666RFS	Disc Gang Reel for SF6433-37	925	7,554.00
17001602RFS	Disc Gang Reel for SF6433-40	1000	8,132.00
17001601RFS	Disc Gang Reel for SF6433-43	1075	8,241.00

***** Note: Will Not Adapt To Older Model Numbered Machines***

DO NOT USE THESE PRICES TO DEDUCT DISC GANG REEL

6630 SERIES VERTICAL TILLAGE TOOL

F.O.B. Beloit, KS

STANDARD CONFIGURATION

6 15” x 10” Eight Bolt Wheels and Hubs, 2-1/4” Spindles and Triple Lip Seals on 21’
6 New 11L GY - FI - F Tires on 21’ (5552YS)
8 15” x 10” Eight Bolt Wheels and Hubs, 2-1.4” Spindles and Triple Lip Seals on 24’, 27’, 29’ and 32’
8 New 11L GY - FI - F Tires on 24’, 27’, 29’ and 32’ (5552YS)
1 Single Point Depth Control with Rephasing Lift System
1 Hydraulic Self-leveling System with Level Indicator
1 Cast Single Lip Hitch with 1-7/8” Pin on 21 and 24’ and a 2” Pin on 27’, 29 and 32’
2 Heavy-duty Gauge Wheels with 8.00 x 10 Tires
22” x 6 ga Sunflower Saber ™ Blades, 7-1/2” Blade Spacing
18° Gang Angles Front and Rear
Channel Iron Trash Bars Between Disc Blades
High Strength 1-3/4” Round Stress Proof Gang Shafts
C-Flex Bearing Standards with Triple Sealed Trunnion Bearings
Maintenance Free Lift and Fold Systems
Automatic Transport Lock with Relief Valve
11” Diameter Finishing Reel with Six Carbon Blades
Safety Equipment Including: Light Kit, SMV Emblem and Safety Chain

These prices reflect the standard configuration. If items other than those listed in the standard configuration are ordered, then the quoted price below will change.

For Quotation Purposes Only – Please Order Items from the Groups on the Next Pages

MODEL NUMBER	CUTTING WIDTH	BLADE DIAMETER	BLADE THICKNESS *	EST. WT.	LIST PRICE
6630-21	21' 8"	22"	6 ga	12192	55,482.00
6630-24	24' 5"	22"	6 ga	12578	57,991.00
6630-27	27' 2"	22"	6 ga	13583	61,283.00
6630-29	29' 11"	22"	6 ga	17348	69,070.00
6630-32	32' 8"	22"	6 ga	21090	74,937.00

Wing Frames on 6630-29 and 6630-32 are over-width (10' 4" and 11' 4") and will require special handling and/or permits.

The 6630-21 through 6630-32 are Subject to Availability

SUNFLOWER

Mississippi State Contract Discount: 5%

6630 SERIES VERTICAL TILLAGE TOOL

ORDER CODE		DESCRIPTION	APPROX. WEIGHT (LBS)	LIST PRICE

Select One Order Code from Each Group, 01 through 09.

Group 01 Base Machine

SF6630-21WC	66302100	6630-21WC Vertical Tillage Tool	5221	25,308.00
SF6630-24WC	66302400	6630-24WC Vertical Tillage Tool	5929	26,053.00
SF6630-27	66302700	6630-27 Vertical Tillage Tool	6689	26,857.00
SF6630-29	66302900	6630-29 Vertical Tillage Tool	8027	30,782.00
SF6630-32	66303200	6630-32 Vertical Tillage Tool	7867	31,916.00

Group 02 Lifts - Center

7500497RS		Standard Lift Assembly for All Sizes, (2-1/4" Spindle)		3,052.00

Group 03 Lifts - Wings

7500498RS		Standard Lift Assembly for 21' - 24' (2-1/4" Spindle		1,684.00
7500499RS		Standard Lift Assembly for 27' (2-1/4" Spindle)		1,742.00
7500500RS		Standard Lift Assembly for 29' -32' (2-1/4" Spindle)		1,896.00

Group 04 Gangs

12301654S		22" 6 Gauge, 7.5" Spacing, C-Flex for 21'		15,325.00
12301655S		22" 6 Gauge, 7.5" Spacing, C-Flex for 24'		15,844.00
12301656S		22" 6 Gauge, 7.5" Spacing, C-Flex for 27'		17,756.00
12301657S		22" 6 Gauge, 7.5" Spacing, C-Flex for 29'		20,054.00
12301658S		22" 6 Gauge, 7.5" Spacing, C-Flex for 32'		23,453.00

Group 05 Tires - (Order Qty 6 on 21' through 27', Order Qty 8 on 29' and 32')

5552YS		(1) New 11L x 15 (GY - FI) Load Range F Tubeless Tire . . . 8 Bolt Wheel (15" x 10")	85	449.00

Group 06 Dual Wheel Kit - Required on 24' & 27' (optional on 21' - see Optional Equipment)

7500501YS		Dual Wheel Kit with Two New, 11L x 15 Tubeless Tires		1,121.00

Group 07 Levelers

2500116RS		Hydraulic Self-Leveling System with Level Indicator	155	1,513.00

The 6630-21 through 6630-32 are Subject to Availability

Mississippi State Contract Discount: 5%

6630 SERIES VERTICAL TILLAGE TOOL

ORDER CODE	DESCRIPTION	APPROX. WEIGHT (LBS)	LIST PRICE

Select One Order Code from Each Group, 01 through 08.

Group 08 Hitches

For Use with 21' through 24'

7921RS	Cast Single Lip Hitch for 1-7/8" Pin Hole, Category III	29	160.00
7924RS	Double Lip Hitch with 1-9/16" Pin Hole	29	160.00

For Use with 27'

6933RS	Cast Single Lip Hitch for 2" Pin Hole, Category IV	29	160.00
7960RS	Double Lip Hitch with 1-7/8" Pin Hole	29	160.00

For Use with 29' through 32'

6933RS	Cast Single Lip Hitch for 2" Pin Hole, Category IV	29	160.00
7960RS	Double Lip Hitch with 1-7/8" Pin Hole	29	160.00
7921RS	Cast Single Lip Hitch for 1-7/8" Pin Hole, Category III	29	160.00
7924RS	Double Lip Hitch with 1-9/16" Pin Hole	29	160.00

Group 09 Attachments - Optional

17001756RS	Finishing Reel for 6630-21WC	1140	5,746.00
17001757RS	Finishing Reel for 6630-24WC	1251	5,870.00
17001758RS	Finishing Reel for 6630-27	1288	6,388.00
17001759RS	Finishing Reel for 6630-29	1590	8,021.00
17001760RS	Finishing Reel for 6630-32	1636	9,355.00

Group 10 - Heavy Duty Three Row Coil Tine - Optional

17001776RS	Heavy Duty 3 Row Coil Tine for 6630-21	1650	7,374.00
17001778RS	Heavy Duty 3 Row Coil Tine for 6630-24	1750	7,815.00
17001779RS	Heavy Duty 3 Row Coil Tine for 6630-27	2000	8,042.00
17001780RS	Heavy Duty 3 Row Coil Tine for 6630-29	1900	7,929.00
17001781RS	Heavy Duty 3 Row Coil Tine for 6630-32	2550	9,593.00

OPTIONAL EQUIPMENT - For Current Machines ONLY

7500501YS	Dual Wheel Kit with Two New, 11L x 15 Tubeless Tires for 6630-21		1,121.00
18663BS	Gang Wrench, 2-3/4"	35	89.00
7500502BS	Wheel Seal Protector Kit (Delta Special)	100	347.00

The 6630-21 through 6630-32 are Subject to Availability

Mississippi State Contract Discount: 5%

6631 SERIES VERTICAL TILLAGE TOOL

F.O.B. Beloit, KS

STANDARD CONFIGURATION

6 New 11l GY - FI Tires with Eight Bolt Wheels and 2 1/4" Slip in Spindles (21') (5552YS)
8 New 11l GY - FI Tires with Eight Bolt Wheels and 2 1/4" Slip in Spindles (24') (5552YS)
8 New 12.5L (GY - FI - I) Tubeless Tires with Eight Bolt Wheel and 2-1/4" Slip in Spindles (27' and 29') (5555YS)
4 New 380/55R x 16.5 Tubeless Tires with Eight Bolt Wheels and 2-3/4" Slip in Spindles (Centers 31' through 36') (16949YS)
4 New 12.5L (GY - FI - I) Tubeless Tires with Eight Bolt Wheel and 2-1/4" Slip in Spindles (Wings 31' through 40') (5555YS)
1 Single Point Depth Control with Rephasing Lift System
1 Hydraulic Self-Leveling System with Level Indicator (21' through 29') (2500193RS)
2 Hydraulic Self-Leveling System with Level Indicator (31' and 36') (2500192RS)
2 Hydraulic Self-Leveling System with Level Indicator (35' and 40') (2500192RS)
Center Lifts (2 3/4" Spindle) (For Split Wing Models 6631-35 and 6631-40)
Wing Lifts (2 1/4" Spindle) (For Split Wing Models 6631-35 and 6631-40)
1 Cast Single Lip Hitch, 2 3/4" Hole, Cat V
2 Heavy Duty Gauge Wheels with 8.00 x 10 tires
22” x 6 ga Sunflower Saber ™ Blades, 7½” blade spacing
18° Gang Angles Front and Rear
Channel Iron Trash Bars between Disc Blades
High Strength 1-3/4” Round Stress Proof Gang Shafts
C-Flex Bearing Standards with Triple Sealed Trunnion Bearings
Maintenance Free Lift and Fold Systems
1 2 ¾" Disc Gang Wrench
11” Diameter Flat Bar Finishing Reel with Six Carbon Blades
Safety Equipment including: Light Kit, SMV Emblem and Safety Chain

MODEL	TRANSPORT WIDTH	TRANSPORT HEIGHT	TRUE CUTTING WIDTH	FRAME SIZE	WEIGHT (KG) w/o ATTACH	GANG BEARING QTY	BLADE FRONT/REAR QTY
SF6631-21	13' 5" (4.1)	10' 10" (3.3)	20' 2" (6.1)	6 - 9 - 6	14,405 (6,289)	10/10	34/38
SF6631-24	13' 5" (4.1)	12' 2" (3.7)	22' 7" (6.9)	7 ½ - 9 - 7 ½	15,683 (7,114)	10/12	38/42
SF6631-27	13' 5" (4.1)	13' 10" (4.2)	26' 3" (8.0)	9 - 9 - 9	17,633 (7,998)	12/12	44/48
SF6631-29	13' 5" (4.1)	15' 0" (4.6)	28' 8" (8.7)	10 - 9 - 10	18,705 (8,485)	12/14	48/52
SF6631-31	17' 5" (5.3)	13' 10" (4.2)	30' 0" (9.1)	9 - 13 - 9	19,885 (9,020)	14/14	50/54
SF6631-33	17' 5" (5.3)	15' 0" (4.6)	32' 6" (9.9)	10 - 13 - 10	20,957 (9,506)	14/16	54/58
SF6631-36	17' 5" (5.3)	16' 1" (4.9)	34' 9" (10.6)	11½ -13 - 11½	21,986 (9,973)	16/16	58/62
Split Wing							
SF6631-35	15' 4" (4.7)	13' 7" (4.1)	32' 7" (9.9)	5 - 7½ - 10 - 7½ -5	24,749 (11,226)	16/18	54/58
SF6631-40	17' 8" (5.4)	13' 7" (4.1)	37' 5" (11.4)	6 -7½ -13-7½ - 6	28,824 (13,075)	18/18	62/66

These prices reflect the standard configuration. If items other than those listed in the standard configuration are ordered, then the quoted price below will change.

For Quotation Purposes Only – Please Order Items from the Groups on the Next Pages

MODEL NUMBER	CUTTING WIDTH	BLADE DIAMETER	BLADE THICKNESS *	EST. WT.	LIST PRICE
6631-21	20' 2"	22"	6 GA	14,405	57,092.00
6631-24	22' 7"	22"	6 GA	15,683	63,020.00
6631-27	26' 3"	22"	6 GA	17,633	69,738.00
6631-29	28' 8"	22"	6 GA	18,705	74,138.00
6631-31	30' 0"	22"	6 GA	19,885	78,550.00
6631-33	32' 6"	22"	6 GA	20,957	80,880.00
6631-36	32' 7"	22"	6 GA	24,749	85,798.00
Split Wing					
6631-35	34' 9"	22"	6 GA	21,986	94,944.00
6631-40	37' 5"	22"	6 GA	28,824	102,409.00

6631 SERIES VERTICAL TILLAGE TOOL

ORDER CODE		DESCRIPTION	APPROX. WEIGHT (LBS)	LIST PRICE

Select One Order Code from Each Group, 01 through 06.

Group 01 Base Machine

SF6631-21	66312100	6631-21 Vertical Tillage Tool	7384	26,361.00
SF6631-24	66312400	6631-24 Vertical Tillage Tool	7846	28,524.00
SF6631-27	66312700	6631-27 Vertical Tillage Tool	8778	31,969.00
SF6631-29	66312900	6631-29 Vertical Tillage Tool	9199	34,298.00
SF6631-31	66313100	6631-31 Vertical Tillage Tool	8660	34,877.00
SF6631-33	66313300	6631-33 Vertical Tillage Tool	9070	35,913.00
SF6631-36	66313600	6631-36 Vertical Tillage Tool	9548	36,948.00
SF6631-35	66313500	6631-35 Split-Wing Vertical Tillage Tool	9507	46,498.00
SF6631-40	66314000	6631-40 Split-Wing Vertical Tillage Tool	12070	50,764.00

Group 02 Gang Saber Blades, 7-1/2" Blade Spacing

12301681S	22" 6 Gauge, 7.5" Spacing, C-Flex for 21'	6102	19,360.00
12301682S	22" 6 Gauge, 7.5" Spacing, C-Flex for 24'	6769	21,223.00
12301683S	22" 6 Gauge, 7.5" Spacing, C-Flex for 27'	7620	22,919.00
12301684S	22" 6 Gauge, 7.5" Spacing, C-Flex for 29'	8271	24,638.00
12301676S	22" 6 Gauge, 7.5" Spacing, C-Flex for 31'	8712	25,447.00
12301670S	22" 6 Gauge, 7.5" Spacing, C-Flex for 33'	9363	26,482.00
12301664S	22" 6 Gauge, 7.5" Spacing, C-Flex for 36'	10018	30,002.00
12301653S	22" 6 Gauge, 7.5" Spacing, C-Flex for 35' Split Wing	9577	26,497.00
12301652S	22" 6 Gauge, 7.5" Spacing, C-Flex for 40' Split Wing	10717	29,023.00

Group 03 Tires

	For 6631-21 & 6631-24		
5552YS	(1) New 11L x 15 (GY - FI) Load Range F Tubeless Tire 8 Bolt Wheel (15" x 10")	85	449.00
	For 6631-27 through 6631-40		
5555YS	(1) New 12.5L, GY - FI, Load Range F Tire 8 Bolt, 15 x 10 Wheel	100	518.00
16949YS	(1) New 380/55R-16.5 Tire, 8 Bolt, 16 x 12 Wheel	110	839.00

MODEL	CENTERS	ORDER QTY	WINGS	ORDER QTY
SF6631-21	5552YS	4	5552YS	2
SF6631-24	5552YS	4	5552YS	4
SF6631-27	5555YS	4	5555YS	4
SF6631-29	5555YS	4	5555YS	4
SF6631-31	16949YS	4	5555YS	4
SF6631-33	16949YS	4	5555YS	4
SF6631-35	16949YS	4	5555YS	4
SF6631-36	16949YS	4	5555YS	4
SF6631-40	16949YS	4	5555YS	4

6631 SERIES VERTICAL TILLAGE TOOL

ORDER CODE	DESCRIPTION	APPROX. WEIGHT (LBS)	LIST PRICE
Group 04	**Lifts - Center (For Split Wing Only)**		
7500542RS	Standard Lift Assembly for 35' (2-3/4" Spindle)	935	4,196.00
7500539RS	Standard Lift Assembly for 40' (2-3/4" Spindle)	1020	4,196.00
Group 05	**Lifts - Wings (For Split Wing Only)**		
7500538RS	Standard Wing Lift Assembly for 35' (2-1/4" Spindles)	660	2,231.00
7500548RS	Standard Wing Lift Assembly for 40' (2-1/4" Spindles)	660	2,541.00
Group 06	**Hitches**		
7921GS	Cast Single Lip Hitch, 1 7/8” hole Category III		160.00
7924GS	Hitch Clevis, 4” double 1 9/16” Hole		160.00
6933GS	Cast Single Lip Hitch, 2” Hole Category IV		160.00
7960GS	Hitch Clevis, 4” Double 1 7/8” Hole		160.00
16785GS	Cast Single Lip Hitch, 2 ¾” Hole Category V		240.00
Group 07	**Levelers (Not Available for 35' or 40')**		
2500193RS	Hydraulic Self Leveler Assembly 21' through 29'		1,482.00
2500192RS	Hydraulic Self Leveler Assembly 31' through 36'		2,963.00
(Note: Hydraulic Self Leveler Assembly is Standard on 35' and 40')			
Group 08	**Shields (Enhances Material Flow in Adverse Field Conditions)**		
19220BS	C-Flex Standard Shields for 6631-21	120	388.00
19219BS	C-Flex Standard Shields for 6631-24	132	414.00
19218BS	C-Flex Standard Shields for 6631-27	144	450.00
19217BS	C-Flex Standard Shields for 6631-29	156	492.00
19216BS	C-Flex Standard Shields for 6631-31	168	543.00
19215BS	C-Flex Standard Shields for 6631-33	180	570.00
19214BS	C-Flex Standard Shields for 6631-36	192	606.00
19213BS	C-Flex Standard Shields for 6631-35	204	647.00
19212BS	C-Flex Standard Shields for 6631-40	216	673.00

6631 SERIES VERTICAL TILLAGE TOOL

ORDER CODE	DESCRIPTION	APPROX. WEIGHT (LBS)	LIST PRICE
Group 09 Finishing Attachments			
Flat Bar Reel - Overlapping Spiral Reels - 11" or 14" Diameters with Six Flat Carbon Blades, Tripled Lipped Sealed Bearings and Spring Loaded Parallel Mounting Arms			
For 21'			
17001832RS	11" Diameter Flat Bar Reel	1470	7,195.00
17001830RS	14" Diameter Flat Bar Reel	1660	7,505.00
For 24'			
17001835RS	11" Diameter Flat Bar Reel	1675	8,199.00
17001833RS	14" Diameter Flat Bar Reel	1910	8,572.00
For 27'			
17001838RS	11" Diameter Flat Bar Reel	2130	9,224.00
17001836RS	14" Diameter Flat Bar Reel	2380	9,643.00
For 29'			
17001841RS	11" Diameter Flat Bar Reel	2205	9,576.00
17001839RS	14" Diameter Flat Bar Reel	2475	10,358.00
For 31'			
17001823RS	11" Diameter Flat Bar Reel	2230	9,835.00
17001821RS	14" Diameter Flat Bar Reel	2490	10,611.00
For 33'			
17001826RS	11" Diameter Flat Bar Reel	2395	10,094.00
17001824RS	14" Diameter Flat Bar Reel	2655	10,871.00
Flat Bar Reel - Overlapping Spiral Reels - 11" or 14" Diameters with Six Flat Carbon Blades, Tripled Lipped Sealed Bearings and Spring Loaded Parallel Mounting Arms			
For 35'			
17001784RS	11" Diameter Flat Bar Reel	1756	10,094.00
17001782RS	14" Diameter Flat Bar Reel	2655	10,871.00
For 36'			
17001829RS	11" Diameter Flat Bar Reel	2370	10,457.00
17001827RS	14" Diameter Flat Bar Reel	2670	11,232.00
For 40'			
17001773RS	11" Diameter Flat Bar Reel	2370	10,457.00
17001771RS	14" Diameter Flat Bar Reel	2670	11,232.00
Chevron Round Bar Reel - Overlapping Chevron Reel -14" Diameter with Ten Round Carbon Chevron Formed Rods, Tripled Lipped Sealed Bearings and Spring Loaded Parallel Mounting Arms			
17001831RS	14" Chevron Round Bar Reel for 21'	1775	8,023.00
17001834RS	14" Chevron Round Bar Reel for 24'	2040	9,168.00
17001837RS	14" Chevron Round Bar Reel for 27'	2525	10,314.00
17001840RS	14" Chevron Round Bar Reel for 29'	2635	11,079.00
17001822RS	14" Chevron Round Bar Reel for 31'	2650	10,871.00
17001825RS	14" Chevron Round Bar Reel for 33'	2830	11,078.00
17001828RS	14" Chevron Round Bar Reel for 36'	2850	11,388.00
17001783RS	14" Chevron Round Bar Reel for 35'	2264	11,078.00
17001772RS	14" Chevron Round Bar Reel for 40'	2413	11,388.00

Mississippi State Contract Discount: 5%

6631 SERIES VERTICAL TILLAGE TOOL

ORDER CODE	DESCRIPTION	APPROX. WEIGHT (LBS)	LIST PRICE
Three Row Spike Drag - Optional			
17001842RS	Three Row Spike Drag for 6631-21	1015	5,176.00
17001844RS	Three Row Spike Drag for 6631-24	1110	5,280.00
17001846RS	Three Row Spike Drag for 6631-27	1200	5,408.00
17001848RS	Three Row Spike Drag for 6631-29	1445	5,714.00
17001820RS	Three Row Spike Drag for 6631-31	1520	6,133.00
17001818RS	Three Row Spike Drag for 6631-33	1615	6,398.00
17001816RS	Three Row Spike Drag for 6631-36	1870	8,583.00
Heavy Duty Three Row Coil Tine - Optional			
17001843RS	HD 3 Row Coil Tine for 6631-21	1305	7,343.00
17001845RS	HD 3 Row Coil Tine for 6631-24	1540	7,373.00
17001847RS	HD 3 Row Coil Tine for 6631-27	1705	7,782.00
17001849RS	HD 3 Row Coil Tine for 6631-29	2150	7,926.00
17001819RS	HD 3 Row Coil Tine for 6631-31	1850	9,539.00
17001817RS	HD 3 Row Coil Tine for 6631-33	2455	9,597.00
17001815RS	HD 3 Row Coil Tine for 6631-36	2555	11,746.00
17001735RS	HD 3 Row Coil Tine for 6631-35 Split-Wing	2895	12,756.00
17001736RS	HD 3 Row Coil Tine for 6631-40 Split-Wing	2903	11,806.00
Optional			
18663BS	Gang Wrench, 2-3/4"	35	89.00
19068RS	Hitch, Rear Tow Assembly for 21’-29’ and 33’	350	1,039.00
19069RS	Hitch, Rear Tow Assembly for 31’ 35’ and 40’ Split-Wing	350	1,039.00

Mississippi State Contract Discount: 5%

6650 FIVE SECTION VERTICAL TILLAGE TOOL

F.O.B. Beloit, KS

STANDARD CONFIGURATION

22” x 6 ga Sunflower Saber™ Blades, 7½” blade spacing
18° Front and Rear Gang Angles
6 380/55 x 16.5 Tubeless Tire, Load Range F with 15” x 10” Eight Bolt Wheels and 2-3/4” Slip in Spindles (Centers)
8 12.5L x 15 12 Ply Tubeless Tires with 15” x 10” Six Bolt Wheels and 2” Slip in Spindles (Wings)
High Strength 1-3/4” Round Stress Proof Gang Shafts
Triple Sealed, Greaseable, Trunnion Style Gang Bearings
C-Flex Bearing Standards (1-1/4” x 2-1/2”)
4" wide Rigid Scraper Assemblies Mounted to C-Flex Standards
Maintenance Free Lift System with 5-1/2” Lift Axle on Center Section
1 CAT 5 Hitch 2” or 2-3/4” Pin
Rephasing Lift System with Single Point Depth Control
Twin Leveler System with Adjusting Hydraulic Cylinders
2 Walking Triples with Greaseable Tapered Roller Bearings (Center)
4 Walking Tandems with Greaseable Tapered Roller Bearings (Wings)
4 Heavy-duty Gauge Wheels with 20.5 x 8 -10 New Tires and Tubes, Five Bolt Hub and Triple Lip Seal
1 Adjustment Wrench
1 Tongue Jack
Safety Equipment Including: Light Kit, SMV Emblem and Safety Tow Chain
11” Diameter Flat Bar Finishing Reel with Six Carbon Blades

MODEL	TRANSPORT WIDTH	TRANSPORT HEIGHT	GANG SHAFTS	GANG STANDARDS FRONT/REAR	DISC BLADES FRONT/REAR	FRAME SIZE
6650-48	18'0"	13'5"	12	20/20	80/82	8.5'-10'-13'-10'-8.5'

These prices reflect the standard configuration. If items other than those listed in the standard configuration are ordered, then the quoted price below will change.

For Quotation Purposes Only – Please Order Items from the Groups on the Next Pages

MODEL NUMBER	CUTTING WIDTH	BLADE DIAMETER	BLADE THICKNESS *	EST. WT.	LIST PRICE
SF6650-48	47'11"	22"	6 GA	36,330	134,648.00

Mississippi State Contract Discount: 5%

6650 SERIES VERTICAL TILLAGE TOOL

ORDER CODE	DESCRIPTION	APPROX. WEIGHT (lbs)	LIST PRICE
	Select One Order Code from Each Group, 01 through 06.		
	Group 01 Base Machine		
66504800	48' Five Section Vertical Tillage Tool		59,815.00
	Group 02 Gangs Saber Blades, 8-1/2" Blade Spacing		
12301711S	22" 6 GA, 7.5" Spacing, C-Flex with Trash Bars		38,722.00
	Group 03 Center Lifts		
7500549RS	Lift Assembly, Center, 2-3/4" Spindle, Walking Tandem		7,941.00
	Group 04 Wing Lifts		
7500550RS	Lift Assembly, Wings, 2" Spindle, Walking Tandem		4,949.00
	Group 05 Tires (order Qty 8 for Wings and 6 for Center)		
3588S	(1) New 12 Ply, 12.5L x 15 Tubeless Tire for Wings		367.00
16949YS	New 380/55R-16.5 Tubeless Tire, 8 Bolt Wheel		839.00
	Group 06 Finishing Attachments		
17001855RS	11" Diameter Flat Bar Finishing Reel Overlapping Spiral Reels 11" Diameter with Six Flat Carbon Blades, Tripled Lipped Sealed Bearings and Spring Loaded Parallel Mounting Arms		15,251.00
17001854RS	3 Row Coil Tine Finishing Harrow - Heavy Duty Spring Loaded Drag Arms with all Required Hardware and Mounting Brackets Three Rows of 1/2" x 22" Coil Tines on 12" Centers, 4" Spacing Overall, with Angle Adjustment and Backup Protection 13" Spacing Between Rows	3236	14,515.00

Dimensions: 3 Row Coil Tine Finishing Harrow	OUTER LEFT WING	INNER LEFT WING	CENTER	INNER RIGHT WING	OUTER RIGHT WING
	8'	10'	6' & 6'	10'	8'

OPTIONAL

19293BS	C-Flex Standard Shields (Enhances Material Flow in Adverse Field Conditions)		758.00
13767RS	Rear Tow Hitch with Hitch Slide and Ball Joint	199	1,008.00
2500182RS	Rear Tow Hitch Hydraulic Package	45	395.00
18663BS	Gang Wrench, 2 3/4"	20	89.00
12634PLS	Wiring Harness to Plug Soil Conditioner Lights into Implement Lights		223.00

RESERVED

FACTORY OR DEALERSHIP ASSEMBLY AMOUNTS ON 7200 SERIES
(DISCOUNTS DO NOT APPLY)

The factory or dealership set-up amounts will be charged for machines set-up by Sunflower. Set-up amounts are the same whether machines are shipped via our truck (gangs off wings, etc.) or set-up completely and picked up by dealer's truck. Factory assembly charge includes hydraulic hose, hydraulic oil, and tips (hydraulic system is charged). Dealer location assembly charge includes hydraulic hose, and tips. (Hydraulic oil is not included) See note below.

MODEL NUMBER	FACTORY ORDER CODE	FACTORY SET-UP RATE	DEALER LOCATION ORDER CODE	DEALER LOCATION SET-UP RATE
SF7212-15	SET0167S	**474.00**	SET0167DS	**496.00**
SF7212-17	SET0168S	**474.00**	SET0168DS	**496.00**
SF7212-20	SET0169S	**474.00**	SET0169DS	**496.00**
SF7212-22	SET0170S	**474.00**	SET0170DS	**496.00**
SF7232-18	SET0171S	**890.00**	SET0171DS	**933.00**
SF7232-20	SET0172S	**890.00**	SET0172DS	**933.00**
SF7232-23	SET0173S	**890.00**	SET0173DS	**933.00**
SF7232-25	SET0174S	**890.00**	SET0174DS	**933.00**
SF7232-28	SET0175S	**890.00**	SET0175DS	**933.00**
SF7232-30	SET0176S	**890.00**	SET0176DS	**933.00**
SF7232-32	SET0179S	**998.00**	SET0179DS	**1,045.00**
SF7232-32NC	SET0177S	**998.00**	SET0177DS	**1,045.00**
SF7232-35	SET0180S	**998.00**	SET0180DS	**1,045.00**
SF7232-35NC	SET0178S	**998.00**	SET0178DS	**1,045.00**
SF7232-37	SET0181S	**998.00**	SET0181DS	**1,045.00**
SF7252-32	SET0182S	**1,307.00**	SET0182DS	**1,370.00**
SF7252-35	SET0183S	**1,307.00**	SET0183DS	**1,370.00**
SF7252-37	SET0184S	**1,307.00**	SET0184DS	**1,370.00**
SF7252-40	SET0185S	**1,413.00**	SET0185DS	**1,481.00**
SF7252-42	SET0186S	**1,413.00**	SET0186DS	**1,481.00**
SF7252-45	SET0187S	**1,413.00**	SET0187DS	**1,481.00**
SF7252-47	SET0189S	**1,516.00**	SET0189DS	**1,588.00**
SF7252-50	SET190S	**1,516.00**	SET190DS	**1,588.00**
SF7252-52	SET0191S	**1,620.00**	SET0191DS	**1,697.00**
SF7252-54	SET0192S	**1,620.00**	SET0192DS	**1,697.00**
SF7252-56	SET0193S	**1,620.00**	SET0193DS	**1,697.00**

SUNFLOWER RECOMMENDS THESE SET-UP FIGURES BE USED BY DEALERS WHEN TRANSFERRING EQUIPMENT

7600 Series Strip-Till Units are Factory Assembled - Including Optional Equipment such as Trail Hitch and Row Markers.

Dealership Assembly requirements:

1. The dealership assembly service must be ordered separately from the implement. (initiates scheduling of service) Please order dealership assembly service from the field installed options tab in e-ordering.
2. Include in the dealership assembly order request the order and/or invoice number of the implement to be assembled.
3. Dealer supplies hydraulic oil (oil is not included).
4. Dealer supplies a fork lift of sufficient size to be used by AGCO's assembly crew.

7200 SERIES SOIL CONDITIONER SPECIFICATIONS

MODEL NUMBER	CUTTING WIDTH	NUMBER OF SECTIONS	NUMBER & SIZE OF REELS	TRANSPORT WIDTH	TRANSPORT HEIGHT
SF7212-15	15’	1	3 – 60”	16’	N/A
SF7212-17 *	17’ 6”	1	1 – 60” & 2 – 75”	18’ 6”	N/A
SF7212-20 *	20’	1	1 – 60” & 2 – 90”	21’	N/A
SF7212-22 *	22’ 6”	1	1 – 60” & 2 – 105”	23’ 6”	N/A
SF7232-18	18’	3	5 – 45”	13’ 6”	8’ 10”
SF7232-20 **	20’ 6”	3	2 – 60” & 3 – 45”	13’ 6”	9’ 10”
SF7232-23 **	23’	3	2 – 75” & 3 – 45”	13’ 6”	10’ 10”
SF7232-25 **	25’ 6”	3	2 – 90” & 3 – 45”	13’ 6”	11’ 10”
SF7232-28	28’	3	1 – 45”, 2 – 60” & 2 – 90”	15’ 10”	11’ 10”
SF7232-30 **	30’ 6”	3	1 – 45”, 2 – 60” & 2 – 105”	15’ 10”	12’ 10”
SF7232-32(NC) *	32’ 6”	3	1 – 45” & 6 – 60”	16’ 4”	14’ 3”
SF7232-35(NC) *	35’	3	1 – 45”, 4 – 60” & 2 – 75”	16’ 4”	15’ 6”
SF7232-32 *	32’ 6”	3	2 – 45”, 4 – 60” & 1 – 75”	18’ 10”	12’ 9”
SF7232-35 *	35’	3	1 – 75” & 6 – 60”	18’ 10”	14’ 3”
SF7232-37 *	37’ 6”	3	3 – 75” & 4 – 60”	18’ 10”	15’ 6”
SF7252-32	32’ 6”	5	3 – 45”, 2 – 60” & 2 – 75”	17’ 4”	11’ 3”
SF7252-35 **	35’	5	1 – 45”, 4 – 60” & 2 – 75”	17’ 4”	11’ 3”
SF7252-37 ***	37’ 6”	5	1 – 45”, 2 – 60” & 4 – 75”	17’ 4”	11’ 3”
SF7252-40	40’	5	4 – 60”, 1 – 75” & 2 – 90”	19’ 10”	12’ 6”
SF7252-42 **	42’ 6”	5	2 – 60”, 3 – 75” & 2 – 90”	19’ 10”	12’ 6”
SF7252-45 ***	45’	5	2 – 60”, 1 – 75” & 4 – 90”	19’ 10”	12’ 6”
SF7252-47	47’ 6”	5	6 – 60” & 3 – 75”	19’ 10”	15’
SF7252-50 ***	50’	5	6 – 60”, & 1 – 75” & 2 – 90”	19’ 10”	15’
SF7252-52	52’	5	8 – 60” & 3 – 75”	19’ 10”	15’
SF7252-54 **	54’	5	10 – 60” & 1 – 75”	19’ 10”	15’
SF7252-56 ***	56’	5	8 – 60”, 3 – 75”	19’ 10”	15’

NC = Narrow Center
* Cutting width can be decreased as much as 15” on each end of the machine for a total of 30”
** Cutting width can be decreased as much as 6” on each end of the machine for a total of 12”
***Cutting width can be decreased as much as 12” on each end of the machine for a total of 24”

Mississippi State Contract Discount: 5%

7200 SERIES SOIL CONDITIONER

F.O.B. Beloit, KS

STANDARD CONFIGURATION

2 New 8 Ply, 9.5L x 15 Tubeless Tires (15’ through 25’)
2 15" x 6" Six Bolt Wheels and Hubs with Zerk, 2" Spindles and Triple Lip Seals (15’ through 25’)
4 New 8 Ply, 9.5L x 15 tubeless tires (28’ through 56’)
4 15" x 6" Six Bolt Wheels and Hubs with Zerk, 2" Spindles and Triple Lip Seals (28’ through 56’)
Adjustable Telescoping Tongue with Clevis
Dropped Hitch with Spring Cushioned Leveler
17" Diameter Chevron Reels with Ten 7/8” Round Blades
C-Flex Cushion Reel Mounts with Trunnion Bearings
Maintenance Free Rockshaft Bearings
1 Tongue Jack
Warning Light Kit, SMV Emblem and Safety Chain
Adjustment Wrench

Some outer wing reels can slide in up to 15" per side to form a better match to implement width (see pg. 7000-2).

7200 SERIES SOIL CONDITIONER

These prices reflect the standard configuration. If items other than those listed in the standard configuration are ordered, then the quoted price below will change.

For Quotation Purposes Only – Please Order Items from the Groups on the Next Pages

MODEL NUMBER	CUTTING WIDTH	REEL SIZES	EST. WEIGHT	LIST PRICE
SINGLE SECTION SOIL CONDITIONERS				
SF7212-15	15’	60 – 60 – 60	2781	13,625.00
SF7212-17	17’ 6"	75 – 60 – 75	2927	14,000.00
SF7212-20	20’	90 – 60 – 90	3072	14,375.00
SF7212-22	22’ 6"	105 – 60 – 105	3224	15,018.00
THREE SECTION SOIL CONDITIONERS				
SF7232-18	18’	45 – 45 – 45 – 45 – 45	3890	19,205.00
SF7232-20	20’ 6"	60 – 45 – 45 – 45 – 60	4120	19,716.00
SF7232-23	23’	75 – 45 – 45 – 45 – 75	4264	20,435.00
SF7232-25	25’ 6"	90 – 45 – 45 – 45 – 90	4520	20,795.00
SF7232-28	28’	90 – 60 – 45 – 60 – 90	4930	22,512.00
SF7232-30	30’ 6"	105 – 60 – 45 – 60 – 105	5075	22,711.00
SF7232-32NC	32’ 6”	60 – 60 – 60 – 45 – 60 – 60 – 60	5945	25,701.00
SF7232-35NC	35’	60 – 75 – 60 – 45 – 60 – 75 – 60	6615	25,978.00
SF7232-32	32’ 6”	45 – 60 – 60 – 75 – 60 – 60 – 45	5945	25,836.00
SF7232-35	35’	60 – 60 – 60 – 75 – 60 – 60 – 60	6615	26,113.00
SF7232-37	37’ 6”	60 – 75 – 60 – 75 – 60 – 75 – 60	6920	26,780.00

These prices reflect the standard configuration. If items other than those above are ordered then the quoted price below will change.

For Quotation Purposes Only – Please Order Items from the Groups on the Next Pages

MODEL NUMBER	CUTTING WIDTH	REEL SIZES	EST. WEIGHT	LIST PRICE
7200 SERIES FIVE SECTION SOIL CONDITIONERS				
SF7252-32	32’ 6"	45 – 75 – 60 – 45 – 60 – 75 – 45	6220	28,302.00
SF7252-35	35’	60 – 75 – 60 – 45 – 60 – 75 – 60	6790	29,015.00
SF7252-37	37’ 6"	75 – 75 – 60 – 45 – 60 – 75 – 75	7170	29,390.00
SF7252-40	40’	60 – 90 – 60 – 75 – 60 – 90 – 60	7740	30,900.00
SF7252-42	42’ 6"	75 – 90 – 60 – 75 – 60 – 90 – 75	8120	31,184.00
SF7252-45	45’	90 – 90 – 60 – 75 – 60 – 90 – 90	8690	31,389.00
SF7252-47	47’ 6"	75 – 60 – 60 – 60 – 75 – 60 – 60 – 60 – 75	9140	33,937.00
SF7252-50	50’	90 – 60 – 60 – 60 – 75 – 60 – 60 – 60 – 90	9580	34,429.00
SF7252-52	52’	45 – 60 – 60 – 60 – 60 – 75 – 60 – 60 – 60 – 60 – 45	9672	43,348.00
SF7252-54	54’	60 – 60 – 60 – 60 – 60 – 75 – 60 – 60 – 60 – 60 – 60	9936	43,865.00
SF7252-56	56’	75 – 60 – 60 – 60 – 60 – 75 – 60 – 60 – 60 – 60 – 75	10192	44,315.00

Mississippi State Contract Discount: 5%

7200 SERIES SOIL CONDITIONER

ORDER CODE	DESCRIPTION	APPROX. WEIGHT (LBS)	LIST PRICE

Select One Order Code from Each Group, 01 through 02.

Group 01 Base Machine

Single Section Soil Conditioners

SF7212-15	72120000, 15’ Cutting Width Soil Conditioner	1541	9,587.00
SF7212-17	72120000, 17’ 6" Cutting Width Soil Conditioner	1541	9,587.00
SF7212-20	72120000, 20’ Cutting Width Soil Conditioner	1541	9,587.00
SF7212-22	72120000, 22’ 6" Cutting Width Soil Conditioner	1541	9,587.00

Three Section Soil Conditioners

SF7232-18	72320000, 18’ Cutting Width Soil Conditioner	2410	15,333.00
SF7232-20	72320000, 20’ 6" Cutting Width Soil Conditioner	2410	15,333.00
SF7232-23	72320000, 23’ Cutting Width Soil Conditioner	2410	15,333.00
SF7232-25	72320000, 25’ 6" Cutting Width Soil Conditioner	2410	15,333.00
SF7232-28	72320001, 28’ Cutting Width Soil Conditioner	2340	17,030.00
SF7232-30	72320001, 30’ 6" Cutting Width Soil Conditioner	2340	17,030.00
SF7232-32NC	72320002, 32’ 6” Cutting Width Soil Conditioner	3780	19,122.00
SF7232-35NC	72320002, 35’ Cutting Width Soil Conditioner	3780	19,122.00
SF7232-32	72320003, 32’ 6” Cutting Width Soil Conditioner	3780	19,257.00
SF7232-35	72320003, 35’ Cutting Width Soil Conditioner	3780	19,257.00
SF7232-37	72320003, 37’ 6” Cutting Width Soil Conditioner	3780	19,157.00

Five Section Soil Conditioners

SF7252-32	72520000, 32’ 6” Cutting Width Soil Conditioner	4030	21,328.00
SF7252-35	72520000, 35’ Cutting Width Soil Conditioner	4030	21,328.00
SF7252-37	72520000, 37’ 6” Cutting Width Soil Conditioner	4030	21,328.00
SF7252-40	72520001, 40’ Cutting Width Soil Conditioner	4500	22,703.00
SF7252-42	72520001, 42’ 6" Cutting Width Soil Conditioner	4500	22,703.00
SF7252-45	72520001, 45’ Cutting Width Soil Conditioner	4500	22,703.00
SF7252-47	72520002, 47’ 6" Cutting Width Soil Conditioner	4500	24,793.00
SF7252-50	72520002, 50’ Cutting Width Soil Conditioner	4500	24,793.00
SF7252-52	72520003, 52’ Cutting Width Soil Conditioner	7230	27,793.00
SF7252-54	72520003, 54’ Cutting Width Soil Conditioner	7230	27,793.00
SF7252-56	72520003, 56’ Cutting Width Soil Conditioner	7230	27,793.00

7200 SERIES SOIL CONDITIONER

ORDER CODE	DESCRIPTION	APPROX. WEIGHT (LBS)	LIST PRICE

Select One Order Code from Each Group, 01 through 02.

Group 02 Reel Assembly 17" Diameter Chevron Reels with Ten 7/8" Round Blades

7500357RS	Reel Assembly for SF7212-15	1240	4,038.00
7500358RS	Reel Assembly for SF7212-17	1386	4,413.00
7500359RS	Reel Assembly for SF7212-20	1531	4,788.00
7500360RS	Reel Assembly for SF7212-22	1683	5,431.00
7500361RS	Reel Assembly for SF7232-18	1480	3,872.00
7500362RS	Reel Assembly for SF7232-20	1710	4,383.00
7500363RS	Reel Assembly for SF7232-23	1854	5,102.00
7500364RS	Reel Assembly for SF7232-25	2110	5,462.00
7500365RS	Reel Assembly for SF7232-28	2590	5,482.00
7500366RS	Reel Assembly for SF7232-30	2735	5,681.00
7500367RS	Reel Assembly for SF7232-32NC	2165	6,579.00
7500369RS	Reel Assembly for SF7232-35NC	2835	6,856.00
7500368RS	Reel Assembly for SF7232-32	2165	6,579.00
7500372RS	Reel Assembly for SF7232-35	2835	6,856.00
7500373RS	Reel Assembly for SF7232-37	3140	7,523.00
7500374RS	Reel Assembly for SF7252-32	2190	6,974.00
7500375RS	Reel Assembly for SF7252-35	2760	7,687.00
7500377RS	Reel Assembly for SF7252-37	3140	8,062.00
7500378RS	Reel Assembly for SF7252-40	3240	8,197.00
7500379RS	Reel Assembly for SF7252-42	3620	8,481.00
7500380RS	Reel Assembly for SF7252-45	5785	8,686.00
7500386RS	Reel Assembly for SF7252-47	6285	9,144.00
7500387RS	Reel Assembly for SF7252-50	6285	9,636.00
7500426RS	Reel Assembly for SF7252-52	4200	15,555.00
7500427RS	Reel Assembly for SF7252-54	4400	16,072.00
7500428RS	Reel Assembly for SF7252-56	4500	16,522.00

OPTIONAL EQUIPMENT - For Current Machines ONLY

12634PLS	Wiring Harness to Plug Soil Conditioner Lights into Implement Lights	223.00

Mississippi State Contract Discount: 5%

7600 SERIES STRIP-TILL

F.O.B. Beloit, KS

STANDARD CONFIGURATION

ROW UNIT
7" x 7" (179 x 179 mm) Four Point Wrap-a-Round the Tool Bar Mounted Row Units
Parallel Linkage with 10" (254 mm) of Vertical Travel
(2) Adjustable Springs Down Pressure
24" x 1/4" (610 x .24 mm) Coulter Blade with Depth Band and Adjustable Scrapers (16393BS and 16719BS)
(2) 13" (330 mm) Tapered Spoke Wheel Row Cleaners (16708BS)
(2) 16" (406 mm) Eight Wave Berm Blades (16718BS)

TOOL BAR
3-Point Hitch - Cat III and IV
7610-20 - Eight Rows (30"), 7" x 7" Tool Bar
7630-30NT - Twelve Rows (30"), 7" x 7", 150 Folding Tool Bar (Narrow Transport)
7630-30 - Twelve Rows (30"), 7" x 7", 95 Folding Tool Bar (Accommodates Hydraulic Row Markers)
Folding Tool Bars: (2) 4" x 30" (102 x 762 mm) Hydraulic Fold Cylinders and Hoses
Warning Light Kit, Complete to Tractor
SMV Emblem
Rear Tow Hitch with Ball Joint and Parking Stand (18573RS)

OPTIONAL EQUIPMENT
Shear Bolt Protected NH3 Knife with Mole Point
12" x 12" (533 x 533 mm) Berm Reel with Adjustable Spring Down Pressure
8 Row Marker Set
12 Row Marker Set
2 Gauge Wheels and Mounting Kit (Includes (2) 9.5L x 15 8-ply Tires)

These prices reflect the standard configuration. If items other than those above are ordered then the quoted price below will change.

For Quotation Purposes Only – Please Order Items from the Groups on the Next Pages

MODEL NUMBER	NUMBER OF ROWS	ROW SPACING	WORKING WIDTH	EST. WEIGHT	SHEAR BOLT ROW UNIT	SPRING TRIP ROW UNIT
SF7610-20	8	30"	20'	7250	38,735.00	45,943.00
SF7630-30NT	12	30"	30'	11700	62,932.00	73,744.00
SF7630-30	12	30"	30'	11700	62,932.00	73,744.00

7600 SERIES STRIP-TILL

ORDER CODE	DESCRIPTION	APPROX. WEIGHT (LBS)	LIST PRICE

Select One Order Code from Each Group, 01 through 07.

Group 01 Base Machine

SF7610-20	76102001, 7610 Strip-Till	1276	8,632.00
SF7630-30-150DEG	76303002, 7630 Strip-Till, Narrow Transport, 150 fold	4877	18,481.00
SF7630-30-95DEG	76303003, 7630 Strip-Till, 95 fold	4877	18,481.00

Group 02 Strip-Till Row Unit – Order 1 per Row

16933RS	Shear-Bolt Row Unit for 7600 Series	400	2,064.00
18000RS	Spring-Trip Row Unit for 7600 Series	490	2,965.00

Group 03 Coulter Blade – Order 1 per Row

16393BS	24" Coulter Blade with Depth Band	80	348.00
16720BS	22" Coulter Blade with Depth Band	78	337.00

Group 04 Row Cleaner – Order 1 per Row

16708BS	Row Cleaner	52	337.00
16721BS	Shark Tooth Wheel Row Cleaner		337.00

Group 05 Wavy Berm Blades Order 1 per Row

16718BS	16" Wavy Fluted Blades	128	794.00

Group 06 Coulter Blade and Depth Band Scrapers

16719BS	Scrapers	4	44.00

Group 07 Rear Tow Hitch / Jackstand

18573RS	Rear Tow Hitch with Ball Joint	352	1,407.00
18570RS	Rear Tow Hitch Slide and Ball Joint		1,596.00

OPTIONAL EQUIPMENT

2500179RS	8 Row Marker Set for 7610-20		4,180.00
2500180RS	12 Row Marker Set for 7630-30 (not available for 7630 NT)		4,291.00
16399PS	NH3 Knife with Mole Point (Order One per Row)	8	41.00
16717BS	12" Berm Reels (Order One per Row)	81	513.00
18304RS	(2) Gauge Wheels, Mounting Kit and (2) 9.5L x 15 Tires		3,142.00

Note: To order Row Units Only - Please order from group 2 through 7 and optional equipment, if desired.

For Row Unit Only Orders - (not to be Ordered with base machines)

18033PLS	Row Unit Shipping Stand (Order One per Row)	66	57.00
18305PLS	Plate, Serial No. - Individual Row Unit (1 per each Row Unit Sold)		No Charge

FACTORY OR DEALERSHIP ASSEMBLY AMOUNTS on 8000 SERIES
(DISCOUNTS DO NOT APPLY)

The factory or dealership set-up amounts will be charged for machines set-up by Sunflower. Set-up amounts are the same whether machines are shipped via our truck (gangs off wings, etc.) or set-up completely and picked up by dealer's truck. Factory assembly charge includes hydraulic hose, hydraulic oil, and tips (hydraulic system is charged). Dealer location assembly charge includes hydraulic hose, and tips. (Hydraulic oil is not included) See note below.

MODEL NUMBER	FACTORY ORDER CODE	FACTORY SET-UP RATE	DEALER LOCATION ORDER CODE	DEALER LOCATION SET-UP RATE
SF8010	SET0195S	**1,281.00**	SET0195DS	**1,342.00**
SF8020	SET0196S	**1,281.00**	SET0196DS	**1,342.00**
SF8210	SET0194S	**1,800.00**	SET0194DS	**1,885.00**

Dealership Assembly requirements:

1. The dealership assembly service must be ordered separately from the implement. (initiates scheduling of service) Please order dealership assembly service from the field installed options tab in e-ordering.
2. Include in the dealership assembly order request the order and/or invoice number of the implement to be assembled.
3. Dealer supplies hydraulic oil (oil is not included).
4. Dealer supplies a fork lift of sufficient size to be used by AGCO's assembly crew.

8010 and 8020 SERIES RICHARDTON DUMP WAGONS

F.O.B. New Hampton, IA

STANDARD CONFIGURATION

Low Profile Box
Roof Assembly
45° Dumping Angle
Patented Dump Box Lock Cylinders
Warning Light Kit and SMV Emblem
Safety Chain

8010 Single Axle
Adjustable Tread width 112”-120”
18 x 38 Wheels, Tires Not Included
Right Hand Dump Standard

8020 Auto-Steer
Used 11.00 x 20” Military Tires on 8 x 20 Heavy-duty Wheels
120” Standard Tread Width
Left Hand Dump Standard

SPECIFICATIONS	SF8010-750 (Single Axle)	SF8020-750 (Auto-Steer)
Length of Box	12’	12’
Capacity with Roof	750 cubic feet	750 cubic feet
Capacity without Roof	550 cubic feet	550 cubic feet
Rated Load Capacity	20,000 lbs.	20,000 lbs.
Dumping Clearance Can flip spindle over to raise or lower on SF8010)	11’ 4” – 11’ 10” *	10’ 9”
Dumping Clearance with 6” Riser (SF8020 only)	N/A	11’ 3”
Ground Clearance	24”	15”
Loading Height	10’ 7”	9’ 10”
Height with Forage Roof	13’ 6½”	12’ 9½”
Forage Roof Height	30”	30”
Lift Cylinders	4” x 78”	4” x 78”
Lock Cylinders	2” x 30”	2” x 30”
Recommended Hydraulic Fluid Flow	15.8 GPM	16.1 GPM
Dump Cycle	1 minute	1 minute

Above Specifications May Vary Slightly Based on Tires, Hydraulic System, or Other Possible Variables.

These prices reflect the standard configuration. If items other than those listed in the standard configuration are ordered, then the quoted price below will change.

For Quotation Purposes Only – Please Order Items from the Groups on the Next Pages

MODEL NUMBER	DESCRIPTION	EST. WT.	LIST PRICE
SF8010-750	12’ Single Axle, Left or Right Hand Dump	6796	43,999.00
SF8020-750	12’ Auto-Steer, Left Hand Dump, 120” Tread Width	6550	43,534.00
SF8020-750	12’ Auto-Steer, Left Hand Dump, 109” Tread Width	6514	44,376.00

SUNFLOWER

Mississippi State Contract Discount: 5%

8010 and 8020 SERIES RICHARDTON DUMP WAGONS

ORDER CODE	DESCRIPTION	APPROX. WEIGHT (LBS)	LIST PRICE

Select One Order Code from Each Group, 01 through 05.

Group 01 Base Machine

SF8010-750-RH	80107501, 12' Single Axle, Right Hand Dump	4626	32,315.00
SF8010-750-LH	80107500, 12' Single Axle, Left Hand Dump	4626	32,315.00
8020 – Left Hand Dump Only			
SF8020-750-120	80207500, 12' Auto-Steer, 120" Tread Width	4494	31,665.00
SF8020-750-109	80207501, 12' Auto-Steer, 109" Tread Width	4458	32,507.00

Group 02 Roof

7500384S	Right Hand Mechanical Roof for SF8010	365	2,422.00
7500352S	Left Hand Mechanical Roof for SF8010 and 8020	365	2,422.00

Group 03 Undercarriage

For SF8010			
7500355S	Single Axle Running Gear for SF8010	1208	7,580.00
For SF8020, 120" Tread Width			
7500350S	Auto-Steer, 120" Without 6" Risers for SF8020	1260	6,942.00
7500351S	Auto-Steer, 120" With 6" Risers for SF8020	1412	8,229.00
For SF8020, 109" Tread Width			
7500353S	Auto-Steer, 109" Without 6" Risers for SF8020	1296	6,942.00
7500354S	Auto-Steer, 109" With 6" Risers for SF8020	1417	8,229.00

Group 04 Tires and Wheels

For SF8010			
10220YS	(1) 18 x 38 Wheels, Single Axle, No Tires (Order Qty 2)	290	739.00
12468YS	Pair of New 20.8 x 38 R1, 10 Ply Tires on 18 x 38 Wheels (Order Qty 1)		6,142.00
For SF8020			
10080YS	(1) Used 11.00 x 20 Military Tire on 8 x 20 Heavy Duty Wheel (Order Qty 4)	143	373.00
10081YS	(1) Used 16.5 x 22.5" High Flotation Tire on 13 x 22.5 Wheel (Order Qty 4)	330	1,013.00

8010 and 8020 SERIES RICHARDTON DUMP WAGONS

ORDER CODE	DESCRIPTION	APPROX. WEIGHT (LBS)	LIST PRICE

Select One Order Code from Each Group, 01 through 05.

Group 05 Hitches

For SF8010

RT01-1026S	Double Lip Hitch with 1-1/16” Pin Hole	18	204.00

For SF8020

7500402S	Hitch Assembly for 120” Tread Width		1,013.00
7500404S	Hitch Assembly for 109” Tread Width		1,013.00

OPTIONAL EQUIPMENT

10078S	6” Dumping Extension Lip	44	645.00
10076S	6” Riser (Includes Hardware) for SF8020	245	1,539.00

Mississippi State Contract Discount: 5%

8210 SERIES RICHARDTON DUMP WAGON

F.O.B. New Hampton, IA

STANDARD CONFIGURATION

Single Axle Wagon with a Low Profile Box
Right Hand Dump with a 48° Dumping Angle
Variable Dump Height
27 x 32 Wheels on 8210 (Tires Not Included)
Swivel Type Single Lip Hitch
Warning Light Kit, SMV Emblem and Safety Chain

SPECIFICATIONS	SF8210-900
Length of Box	15’
Capacity with Roof	N/A
Capacity without Roof	900 cubic feet
Rated Load Capacity	40,000 lbs.
Variable Dump Height (Min.-Max.)	9’ 6” – 15’
Ground Clearance	16”
Loading Height	11’
Tread Width	120”
Lift Cylinders	4” x 72”
Dump Cylinders	5” x 72”
Recommended Hydraulic Fluid Flow	25.7 GPM
Dump Cycle	1 minute

Above Specifications May Vary Slightly Based on Tires, Hydraulic System, or Other Possible Variables.

These prices reflect the standard configuration. If items other than those listed in the standard configuration are ordered, then the quoted price below will change.

For Quotation Purposes Only – Please Order Items from the Groups on the Next Pages

MODEL NUMBER	DESCRIPTION	EST. WT.	LIST PRICE
SF8210-900	Single Axle, Multi-Purpose Dump Wagon	12570	66,789.00

Mississippi State Contract Discount: 5%

8210 SERIES RICHARDTON DUMP WAGON

ORDER CODE	DESCRIPTION	APPROX. WEIGHT (LBS)	LIST PRICE

Select One Order Code from Each Group, 01 through 03.

Group 01 Base Machine

SF8210-900	82109000, Single Axle, Multi-Purpose Dump Wagon	12350	62,592.00

Group 02 Tires and Wheels

RT555-014S	27 x 32 Wheels, No Tires (Order Qty 2)	290	694.00
RT555-010S	21 x 32 Wheels, No Tires (Order Qty 2)	290	694.00
10721YS	Set of New 30.5 x 32 R1 12 Ply Tires on 27 x 32 Wheels . . . (Order Qty 1)		7,563.00
10720YS	Set of New 24.5 x 32 R1 12 Ply Tires on 21 x 32 Wheels . . . (Order Qty 1)		6,889.00

Group 03 Hitches

For SF8010

10612S	Swivel Type Single Lip Hitch	220	2,809.00
10613S	Swivel Type Double Lip Hitch.	230	2,809.00

OPTIONAL EQUIPMENT

10617S	18” Dumping Lip Extension	167	1,249.00
10618S	18” Wall Extension with Dumping Lip Extension . . . . . (adds approximately 100 bushels to the holding capacity of the wagon)	309	2,400.00
12841RS	18” Peanut Lip Extension with Catch Tray	336	2,767.00
16028RS	Flare Extension Kit . . . . . (Reduces End-Plate Spillage) (Use with (10617S) Dumping Lip Extension but in Lieu of (16028RS) Flare Extension Kit)	375	4,408.00

9000 Series

9312 SERIES SUNFLOWER PULL TYPE END WHEEL GRAIN DRILL
(PASTURE DRILL)
F.O.B. Beloit, KS

STANDARD CONFIGURATION

7-1/2" or 10" Row Spacing
Walk Boards
Staggered Double Disc Openers with 15" Smooth Blades
Sight Glasses (2 per Box)
Floating Drives with 8 Ply, 9.5L x 15 Tires
50 Drive Chain
Hydraulic Cylinders with Hoses
Cut Steel Sprockets
2.4 Bushel per Foot Boxes
Six Internal Fluted Meters
(2) 12 Ply, 9.5L x 15 Tires
Heavy-duty Bearings
Chain Idlers
Heavy-duty Down Pressure Springs
Acremeter
Warning Light Kit
SMV Emblem

All purpose openers with parallel links, adjustable for no-till, min-till and conventional seeding.
Choice of press wheels: 2” x 13” Smooth Crown, 3" x 13" Center Rib, 3" x 13" Double Rib or 4" x 12" Double Rib Press Wheels

These prices reflect the standard configuration. If items other than those listed in the standard configuration are ordered, then the quoted price below will change.

For Quotation Purposes Only – Please Order Items from the Groups on the Next Pages

MODEL NUMBER	DRILL WIDTH	HOPPER SIZE (#)	ROW SPACING	NUMBER OF OPENERS	ESTIMATED WEIGHT	LIST PRICE
SF9312-07	7 ½’	7½’ (1)	7½”	12	3859	28,086.00
SF9312-07	7 ½’	7½’ (1)	10”	9	3481	25,188.00
SF9312-10	10’	10’ (1)	7½”	16	4840	33,744.00
SF9312-10	10’	10’ (1)	10”	12	4290	29,867.00
SF9312-15	15’	7½’ (2)	7½”	24	7222	45,029.00
SF9312-15	15’	7½’ (2)	10”	18	6406	39,213.00

9312 SERIES SUNFLOWER PULL TYPE END WHEEL GRAIN DRILL

ORDER CODE	DESCRIPTION	APPROX. WEIGHT (LBS)	LIST PRICE

Select One Order Code from Each Group, 01 through 03.

Group 01 Base Machine PT End Wheel Grain Drill

SF9312-07-75INCH	93120700, 7½" Spacing	2209	17,378.00
SF9312-07-10INCH	93120701, 10" Spacing	2209	17,156.00
SF9312-10-75INCH	93121000, 7½" Spacing	2640	19,467.00
SF9312-10-10INCH	93121001, 10" Spacing	2640	19,159.00
SF9312-15-75INCH	93121500, 7½" Spacing	3922	23,614.00
SF9312-15-10INCH	93121501, 10" Spacing	3922	23,153.00

Group 02 Openers 15" Smooth Blade
(All Purpose with Parallel Links, Adjustable for No-Till, Min-Till & Conventional Seeding)

For SF9312-07

18000161S	12 Staggered Double Disc Openers, 7½" Spacing	1530	9,796.00
18000162S	9 Staggered Double Disc Openers, 10" Spacing	1152	7,348.00

For SF9312-10

18000144S	16 Staggered Double Disc Openers, 7½" Spacing	2040	13,061.00
18000146S	12 Staggered Double Disc Openers, 10" Spacing	1530	9,796.00

For SF9312-15

18000148S	24 Staggered Double Disc Openers, 7½" Spacing	3060	19,591.00
18000150S	18 Staggered Double Disc Openers, 10" Spacing	2304	14,692.00

Group 03 Press Wheels Order 1 per Opener

7500341BS	2" x 13" Smooth Crown	10	76.00
7500343BS	3" x 13" Center Rib	10	76.00
7500344BS	3" x 13" Double Rib	10	76.00
7500340BS	4" x 12" Double Rib	10	76.00

9312 SERIES SUNFLOWER PULL TYPE END WHEEL GRAIN DRILL

ORDER CODE	DESCRIPTION	APPROX. WEIGHT (LBS)	LIST PRICE

OPTIONAL EQUIPMENT - For Current Machines ONLY

Legume / Grass Seed Box – Order Box plus ONE Attachment, either 7½" or 10" spacing

For SF9312-07

7500165RS	Legume / Grass Seed Box for SF9312-07	123	3,347.00
18000045S	Attachment for 7½" Spacing	42	936.00
18000047S	Attachment for 10" Spacing	31	763.00

For SF9312-10

7500166RS	Legume / Grass Seed Box for SF9312-10	163	3,586.00
18000048S	Attachment for 7½" Spacing	56	1,232.00
18000050S	Attachment for 10" Spacing	42	1,009.00

For SF9312-15

7500167RS	Legume / Grass Seed Box for SF9312-15	245	4,785.00
18000051S	Attachment for 7½" Spacing	84	1,831.00
18000053S	Attachment for 10" Spacing	63	1,483.00

Opener Shields

18254BS	Opener Shield for SF9312-07	61	232.00
18255BS	Opener Shield for SF9312-10	81	278.00
18257BS	Opener Shield for SF9312-15	123	461.00

Seed Cup Dividers (Tents) **(Order Number of Openers Minus 1 Per Hopper)**

12397YDS	Seed Cup Dividers, 7½" Spacing	1	6.00
12398YDS	Seed Cup Dividers, 10" Spacing	1	8.00

Weight Brackets (Pair)

7500162RS	Weight Brackets for SF9312-07	90	424.00
7500163RS	Weight Brackets for SF9312-10	90	424.00
7500164RS	Weight Brackets for SF9312-15	90	424.00

Miscellaneous

2500097RS	Hydraulic Row Markers for SF9312-15	495	3,570.00
204-134S	Alfalfa Reducer ORDER ONE PER ROW		6.00
DR12017S	Seed Cup Plug (Order One Per Two Rows - Recommended)	1	1.00

Mississippi State Contract Discount: 5%

9412 SERIES SUNFLOWER 3-POINT GRAIN DRILL
F.O.B. Beloit, KS

STANDARD CONFIGURATION

7-1/2", 10"
Double Disc Openers with 15" Smooth Blades
Heavy-duty Down Pressure Springs
Floating Drives with 8 Ply, 9.5L x 15 Tires
50 Drive Chain
2.4 Bushel per Foot Low Profile Boxes (10')
3.0 Bushel per Foot Low Profile Boxes (12.5')
Acremeter
Hex Jack Shafts
Walk Boards
Sight Glasses (2 per Box)
Chain Idlers
Quick Change Cut Steel Hex Sprockets
Six Internal Fluted Meters
Heavy-duty Bearings
Warning Light Kit
SMV Emblem

All purpose openers with parallel links, adjustable for no-till, min-till and conventional seeding.
Choice of press wheels:
2" x 13" Smooth Crown, 3" x 13" Center Rib, 3" x 13" Double Rib or 4" x 12" Double Rib Press Wheels

These prices reflect the standard configuration. If items other than those listed in the standard configuration are ordered, then the quoted price below will change.

For Quotation Purposes Only – Please Order Items from the Groups on the Next Pages

MODEL NUMBER	DRILL WIDTH	HOPPER SIZE (#)	ROW SPACING	NUMBER OF OPENERS	ESTIMATED WEIGHT	LIST PRICE
SF9412-10	10'	10' (1)	7½"	16	3876	29,934.00
SF9412-10	10'	10' (1)	10"	12	3326	25,532.00
SF9412-12	12½'	12½' (1)	7½"	20	5110	36,878.00
SF9412-12	12½'	12½' (1)	10"	15	4423	31,348.00

9412 SERIES SUNFLOWER 3-POINT GRAIN DRILL

ORDER CODE	DESCRIPTION	APPROX. WEIGHT (LBS)	LIST PRICE
	Select One Order Code from Each Group, 01 through 03.		
Group 01 Base Machine	**3-Point Grain Drill**		
SF9412-10-75INCH	94121000, 7½” Spacing	1676	15,657.00
SF9412-10-10INCH	94121002, 10” Spacing	1676	14,824.00
SF9412-12-75INCH	94121200, 7½” Spacing	2360	19,033.00
SF9412-12-10INCH	94121201, 10” Spacing	2360	17,962.00
Group 02 Openers	**15" Smooth Blade**		
	(All Purpose with Parallel Links, Adjustable for No-Till, Min-Till & Conventional Seeding)		
For SF9412-10			
18000144S	16 Staggered Double Disc Openers, 7½” Spacing	2040	13,061.00
18000146S	12 Staggered Double Disc Openers, 10” Spacing	1530	9,796.00
For SF9412-12			
18000147S	20 Staggered Double Disc Openers, 7½” Spacing	2550	16,325.00
18000145S	15 Staggered Double Disc Openers, 10” Spacing	1913	12,246.00
Group 03 Press Wheels	**Order 1 per Opener**		
7500341BS	2" x 13" Smooth Crown	10	76.00
7500343BS	3" x 13" Center Rib	10	76.00
7500344BS	3" x 13" Double Rib	10	76.00
7500340BS	4" x 12" Double Rib	10	76.00

Mississippi State Contract Discount: 5%

9412 SERIES SUNFLOWER 3-POINT GRAIN DRILL

OPTIONAL EQUIPMENT - For Current Machines ONLY

Legume / Grass Seed Box – Order Box plus ONE Attachment, either 7½" or 10" spacing

ORDER CODE	DESCRIPTION	APPROX. WEIGHT (LBS)	LIST PRICE
For SF9412-10			
7500288RS	Legume / Grass Seed Box for SF9412-10	163	3,668.00
18000048S	Attachment for 7½" Spacing	56	1,232.00
18000050S	Attachment for 10" Spacing	42	1,009.00
For SF9412-12			
7500347RS	Legume / Grass Seed Box for SF9412-12	244	4,200.00
18000149S	Attachment for 7½" Spacing	56	1,701.00
18000152S	Attachment for 10" Spacing	42	1,664.00
Opener Shields			
18255BS	Opener Shield for SF9412-10	81	278.00
18256BS	Opener Shield for SF9412-12	102	401.00
Seed Cup Dividers (Tents) (Order Number of Openers Minus 1 Per Hopper)			
12397YDS	Seed Cup Dividers, 7½" Spacing	1	6.00
12398YDS	Seed Cup Dividers, 10" Spacing	1	8.00
Hydraulic Row Markers			
2500092RS	Hydraulic Row Markers SF9412-12	500	4,215.00
Transport Pull Hitches			
2500138RS	Transport Pull Hitch for SF9412-10	1650	7,274.00
2500136RS	Transport Pull Hitch for SF9412-12	1650	7,570.00
Weight Brackets (Pair)			
7500163RS	Weight Brackets for SF9412-10	90	424.00
7500179RS	Weight Brackets for SF9412-12	90	631.00
Miscellaneous			
204-134S	Alfalfa Reducer ORDER ONE PER ROW		6.00
DR12017S	Seed Cup Plug (Order One Per Two Rows - Recommended)	1	1.00

9413 SERIES SUNFLOWER 3-POINT GRAIN DRILL

F.O.B. Beloit, KS

STANDARD CONFIGURATION

7-1/2" or 10" Row Spacing
Double Disc "Heads Up Openers" with 15" Smooth Blades
Heavy-duty Down Pressure Springs
Floating Drives with 8 Ply, 9.5L x 15 Tires
50 Drive Chain with Spring Loaded Idlers
3.75 Bushel per Foot Boxes
Acremeter
Walk Boards
Sight Glasses (2 per Box)
Internal Fluted (6 Flutes) Seed Meters
Seed Cup Dividers (Tents)
Hex Jack Shafts with Quick Change Sprockets
SMV Emblem
Warning Light Kit

All purpose openers with parallel links are adjustable for no-till, min-till and conventional seeding.
Choice of press wheels: 2” x 13” Smooth Crown, 3" x 13" Center Rib, 3" x 13" Double Rib or 4" x 12" Double Rib

These prices reflect the standard configuration. If items other than those listed in the standard configuration are ordered, then the quoted price below will change.

For Quotation Purposes Only – Please Order Items from the Groups on the Next Pages

MODEL NUMBER	DRILL WIDTH	HOPPER SIZE (#)	ROW SPACING	NUMBER OF OPENERS	ESTIMATED WEIGHT	LIST PRICE
SF9413-15	15’	7½’ (2)	7½”	24	6219	41,796.00
SF9413-15	15’	7½’ (2)	10”	18	5403	35,188.00
SF9413-20	20’	10’ (2)	7½”	32	8063	55,286.00
SF9413-20	20’	10’ (2)	10”	24	6963	46,651.00

SUNFLOWER

Mississippi State Contract Discount: 5%

9413 SERIES SUNFLOWER 3-POINT GRAIN DRILL

ORDER CODE	DESCRIPTION	APPROX. WEIGHT (LBS)	LIST PRICE

Select One Order Code from Each Group, 01 through 03.

Group 01 Base Machine 3-Point Grain Drill

SF9413-15	94131500, 7½" Spacing	2919	20,381.00
SF9413-15	94131501, 10" Spacing	2919	19,128.00
SF9413-20	94132000, 7½" Spacing	3663	26,732.00
SF9413-20	94132001, 10" Spacing	3663	25,236.00

Group 02 Openers 15" Smooth Blade

(All Purpose with Parallel Links, Adjustable for No-Till, Min-Till & Conventional Seeding)

For SF9413-15

18000206S	24 Staggered Double Disc Openers, 7½" Spacing	3060	19,591.00
18000207S	18 Staggered Double Disc Openers, 10" Spacing	2304	14,692.00

For SF9413-20

18000208S	32 Staggered Double Disc Openers, 7½" Spacing	4080	26,112.00
18000209S	24 Staggered Double Disc Openers, 10" Spacing	3060	19,591.00

Group 03 Press Wheels Order 1 per Opener

7500341BS	2" x 13" Smooth Crown	10	76.00
7500343BS	3" x 13" Center Rib	10	76.00
7500344BS	3" x 13" Double Rib	10	76.00
7500340BS	4" x 12" Double Rib	10	76.00

9413 SERIES SUNFLOWER 3-POINT GRAIN DRILL

ORDER CODE	DESCRIPTION	APPROX. WEIGHT (LBS)	LIST PRICE
OPTIONAL EQUIPMENT - For Current Machines ONLY			
Legume / Grass Seed Box – Order Box plus ONE Attachment, either 7½" or 10" spacing			
For SF9413-15			
7500482RS	Legume / Grass Seed Box for SF9413-15	245	4,880.00
18000194S	Mounting Hardware for 7½" Spacing	84	1,831.00
18000195S	Mounting Hardware for 10" Spacing	63	1,483.00
For SF9413-20			
7500483RS	Legume / Grass Seed Box for SF9413-20	326	5,930.00
18000196S	Mounting Hardware for 7½" Spacing	112	2,420.00
18000197S	Mounting Hardware for 10" Spacing	84	1,967.00
Opener Shields			
18257BS	Opener Shield for SF9413-15	123	461.00
18258BS	Opener Shield for SF9413-20	164	534.00
Hydraulic Row Markers			
2500174RS	Hydraulic Row Markers SF9413-15	500	4,215.00
2500176RS	Hydraulic Row Markers SF9413-20	525	4,230.00
Transport Pull Hitches			
2500100RS	Transport Pull Hitch for SF9413-15 and SF9413-20	1850	8,148.00
Weight Brackets (Pair)			
7500479RS	Weight Brackets for SF9413-15 and -20	90	631.00
Miscellaneous			
204-134S	Alfalfa Reducer ORDER ONE PER ROW		6.00
DR12017S	Seed Cup Plug (Order One Per Two Rows - Recommended)		1.00

Mississippi State Contract Discount: 5%

9510 SERIES SUNFLOWER FERTILIZER GRAIN DRILL

F.O.B. Beloit, KS

STANDARD CONFIGURATION

7-1/2" or 10" Row Spacing
Double Disc "Heads Up Openers" with 15" Smooth Blades
Heavy-duty Down Pressure Springs
Floating Drives with 8 Ply, 9.5L x 15 Tires
50 Drive Chain with Spring Loaded Idlers
3.75 Bushel per Foot Total Capacity
Hopper Capacity : 2.4 Bushel per Foot (Seed)
and 120 lb per Foot (Dry Fertilizer)
Acremeter
Walk Boards
Sight Glasses (2 per Box)
Internal Fluted (6 Flutes) Seed Meters
Seed Cup Dividers (Tents)
External Fluted Meter (Fertilizer)
Hex Jack Shafts, with Quick Change Sprockets
SMV Emblem
Warning Light Kit

All purpose openers with parallel links are adjustable for no-till, min-till and conventional seeding.
Choice of press wheels: 2” x 13” Smooth Crown, 3" x 13" Center Rib, 3" x 13" Double Rib or 4" x 12" Double Rib

These prices reflect the standard configuration. If items other than those listed in the standard configuration are ordered, then the quoted price below will change.

For Quotation Purposes Only – Please Order Items from the Groups on the Next Pages

MODEL NUMBER	DRILL WIDTH	HOPPER SIZE (#)	ROW SPACING	NUMBER OF OPENERS	ESTIMATED WEIGHT	LIST PRICE
SF9510-15	15’	7½’ (2)	7½”	24	6630	46,409.00
SF9510-15	15’	7½’ (2)	10”	18	5418	39,158.00
SF9510-20	20’	10’ (2)	7½”	32	8652	60,579.00
SF9510-20	20’	10’ (2)	10”	24	7552	50,937.00

9510 SERIES SUNFLOWER FERTILIZER GRAIN DRILL

ORDER CODE	DESCRIPTION	APPROX. WEIGHT (LBS)	LIST PRICE

Select One Order Code from Each Group, 01 through 03.

Group 01 Base Machine 3-Point Grain Drill

SF9510-15	95101500, 7½” Spacing	3330	24,994.00
SF9510-15	95101501, 10” Spacing	3330	23,098.00
SF9510-20	95102000, 7½” Spacing	4252	32,025.00
SF9510-20	95102001, 10” Spacing	4252	29,522.00

Group 02 Openers 15" Smooth Blade

(All Purpose with Parallel Links, Adjustable for No-Till, Min-Till & Conventional Seeding)

For SF9510-15

18000206S	24 Staggered Double Disc Openers, 7½” Spacing	3060	19,591.00
18000207S	18 Staggered Double Disc Openers, 10” Spacing	2304	14,692.00

For SF9510-20

18000208S	32 Staggered Double Disc Openers, 7½” Spacing	4080	26,122.00
18000209S	24 Staggered Double Disc Openers, 10” Spacing	3060	19,591.00

Group 03 Press Wheels Order 1 per Opener

7500341BS	2" x 13" Smooth Crown	10	76.00
7500343BS	3" x 13" Center Rib	10	76.00
7500344BS	3" x 13" Double Rib	10	76.00
7500340BS	4" x 12" Double Rib	10	76.00

9510 SERIES SUNFLOWER FERTILIZER GRAIN DRILL

ORDER CODE	DESCRIPTION	APPROX. WEIGHT (LBS)	LIST PRICE

OPTIONAL EQUIPMENT - For Current Machines ONLY

Legume / Grass Seed Box – Order Box plus ONE Attachment, either 7½" or 10" spacing

For SF9510-15

7500489RS	Legume / Grass Seed Box for SF9510-15	245	4,880.00
18000198S	Attachment for 7½" Spacing		1,831.00
18000199S	Attachment for 10" Spacing		1,483.00

For SF9510-20

7500490RS	Legume / Grass Seed Box for SF9510-20	326	5,930.00
18000200S	Attachment for 7½" Spacing		2,420.00
18000201S	Attachment for 10" Spacing		1,967.00

Opener Shields

18257BS	Opener Shield for SF9510-15	123	461.00
18258BS	Opener Shield for SF9510-20	164	534.00

Hydraulic Row Markers

2500174RS	Hydraulic Row Markers SF9510-15	500	4,215.00
2500176RS	Hydraulic Row Markers SF9510-20	525	4,230.00

Transport Pull Hitches

2500100RS	Transport Pull Hitch for SF9510-15 and SF9510-20	1850	8,148.00

Weight Brackets (Pair)

7500479RS	Weight Brackets for SF9510-15 and -20	90	631.00

Miscellaneous

204-134S	Alfalfa Reducer ORDER ONE PER ROW		6.00
DR12017S	Seed Cup Plug (Order One Per Two Rows - Recommended)		1.00

9421 SERIES SUNFLOWER TWO SECTION FOLDING GRAIN DRILL

F.O.B. Beloit, KS

STANDARD CONFIGURATION

7-1/2" or 10" Row Spacing
Walk Boards
Double Disc Openers with 15" Smooth Blades
Sight Glasses (2 per Box)
Single Lip Hitch with 2” Pin Hole
Chain Idlers
Floating Drives with (2) 8 Ply, 9.5L x 15 Tires
Quick Change Cut Steel Hex Sprockets
Hydraulic Cylinders with Hoses
Internal Fluted Meter
3.0 Bushel per Foot Boxes
Heavy-duty 205 Bearings
50 Drive Chain
Heavy-duty Down Pressure Springs
(4) 12 Ply, 11L x 15 and (4) 8 Ply, 9.5L x 15 Tires
Warning Light Kit
Hex Jack Shafts
Acremeter
SMV Emblem

All purpose openers with parallel links, adjustable for no-till, min-till and conventional seeding.
Choice of Press Wheels:
2" x 13" Smooth Crown, 3" x 13" Center Rib, 3" x 13" Double Rib or 4" x 12" Double Rib

These prices reflect the standard configuration. If items other than those listed in the standard configuration are ordered, then the quoted price below will change.

For Quotation Purposes Only – Please Order Items from the Groups on the Next Pages

MODEL NUMBER	DRILL WIDTH	HOPPER SIZE (#)	ROW SPACING	NUMBER OF OPENERS	ESTIMATED WEIGHT	LIST PRICE
SF9421-20	20’	10’ (2)	7½”	32	11300	76,959.00
SF9421-20	20’	10’ (2)	10”	24	10200	68,964.00
SF9421-25	25’	12½’ (2)	7½”	40	14041	91,653.00
SF9421-25	25’	12½ (2)	10”	30	12666	81,195.00
SF9421-30	30’	7½’ (4)	7½”	48	17479	105,202.00
SF9421-30	30’	7½’ (4)	10”	36	15829	92,661.00

SUNFLOWER

Mississippi State Contract Discount: 5%

9421 SERIES SUNFLOWER TWO SECTION FOLDING GRAIN DRILL

ORDER CODE	DESCRIPTION	APPROX. WEIGHT (LBS)	LIST PRICE

Select One Order Code from Each Group, 01 through 03.

Group 01 Base Machine 2- Section Folding Grain Drill

SF9421-20-75INCH	94212000, 7½” Spacing	6900	48,405.00
SF9421-20-10INCH	94212001, 10” Spacing	6900	47,549.00
SF9421-25-75INCH	94212500, 7½” Spacing	8541	55,963.00
SF9421-25-10INCH	94212501, 10” Spacing	8541	54,428.00
SF9421-30-75INCH	94213000, 7½” Spacing	10879	62,373.00
SF9421-30-10INCH	94213001, 10” Spacing	10879	60,539.00

Group 02 Openers 15" Smooth Blade

(All Purpose with Parallel Links, Adjustable for No-Till, Min-Till & Conventional Seeding)

For SF9421-20

18000151S	32 Staggered Double Disc Openers, 7½” Spacing	4080	26,122.00
18000153S	24 Staggered Double Disc Openers, 10” Spacing	3060	19,591.00

For SF9421-25

18000154S	40 Staggered Double Disc Openers, 7½” Spacing	5100	32,650.00
18000155S	30 Staggered Double Disc Openers, 10” Spacing	3825	24,487.00

For SF9421-30

18000156S	48 Staggered Double Disc Openers, 7½” Spacing	6120	39,181.00
18000157S	36 Staggered Double Disc Openers, 10” Spacing	4590	29,386.00

Group 03 Press Wheels Order 1 per Opener

7500341BS	2" x 13" Smooth Crown	10	76.00
7500343BS	3" x 13" Center Rib	10	76.00
7500344BS	3" x 13" Double Rib	10	76.00
7500340BS	4" x 12" Double Rib	10	76.00

9421 SERIES SUNFLOWER TWO SECTION FOLDING GRAIN DRILL

OPTIONAL EQUIPMENT - For Current Machines ONLY

Legume / Grass Seed Box – Order Box plus ONE Attachment, either 7½" or 10" spacing

ORDER CODE	DESCRIPTION	APPROX. WEIGHT (LBS)	LIST PRICE
For SF9421-20			
7500290RS	Legume / Grass Seed Box for SF9421-20	326	5,930.00
18000054S	Attachment for 7½" Spacing	112	2,420.00
18000056S	Attachment for 10" Spacing	84	1,967.00
For SF9421-25			
7500389RS	Legume / Grass Seed Box for SF9421-25	488	6,865.00
18000170S	Attachment for 7½" Spacing	112	3,130.00
18000171S	Attachment for 10" Spacing	84	2,516.00
For SF9421-30			
7500390RS	Legume / Grass Seed Box for SF9421-30	437	8,421.00
18000172S	Attachment for 7½" Spacing	168	3,727.00
18000173S	Attachment for 10" Spacing	128	3,029.00
Opener Shields			
18258BS	Opener Shield for SF9421-20	164	534.00
18259BS	Opener Shield for SF9421-25	152	779.00
19320BS	Opener Shield for SF9421-30	176	832.00
Seed Cup Dividers (Tents) (Order Number of Openers Minus 1 Per Hopper)			
12397YDS	Seed Cup Dividers, 7½" Spacing	1	6.00
12398YDS	Seed Cup Dividers, 10" Spacing	1	8.00
Hydraulic Row Markers			
2500128RS	Hydraulic Row Markers SF9421-20		5,878.00
2500127RS	Hydraulic Row Markers SF9421-25	1020	5,878.00
2500126RS	Hydraulic Row Markers SF9421-30	700	5,878.00
Miscellaneous			
2500124RS	Selector Valve Assembly for Tractors with Less Than 4 Hydraulic Outlets	20	371.00
12446RS	Shaft and Bin Level Monitors (Includes one per section)		1,794.00
204-134S	Alfalfa Reducer ORDER ONE PER ROW		6.00
DR12017S	Seed Cup Plug (Order One Per Two Rows - Recommended)	1	1.00

Mississippi State Contract Discount: 5%

9435 SERIES SUNFLOWER THREE-SECTION FOLDING GRAIN DRILL

F.O.B. Beloit, KS

STANDARD CONFIGURATION

7-1/2" or 10" Row Spacing
Walk Boards
All-Purpose "Heads Up" Double Disc Openers with 15" Smooth Blades
Sight Glasses (2 per Box)
Floating Drives with 8 Ply, 9.5L x 15 Tires on Each Section
Heavy-duty Down Pressure Springs
Heavy-duty Main Lift with Four Cylinders (Two 4" Main Lift Cylinders, Two 3-1/2" Assist Lift Cylinders)
Internal Fluted Meter
Easy Adjust Seed Rate Adjustment Handle (1 per Section, 1/16" Increments)
3.75 Bushel per Foot Total Capacity
Seed Cup Dividers (Tents)
Maintenance Free Lift System (UHMW)
50 Drive Chain with Spring Loaded Idlers
Automatic Road Lock on Transport
Hex Jack Shafts with Quick Change Cut Steel Sprockets
Warning Light Kit
(4) 3" Spindle and Eight Bolt Hubs (8,000 lb Capacity, Main Frame)
(4) New 380/55R 16.5 Wheel and Tire Assembly (Main Frame)
(4) New 12 Ply 9.5L x 15 Tubeless Tires (Wings)
Acremeter
SMV Emblem

All purpose openers with parallel links, adjustable for no-till, min-till and conventional seeding.
Press Wheels:
Choice of 2" x 13" Smooth Crown, 3" x 13" Center Rib, 3" x 13" Double Rib or 4" x 12" Double Rib

These prices reflect the standard configuration. If items other than those listed in the standard configuration are ordered, then the quoted price below will change.

For Quotation Purposes Only – Please Order Items from the Groups on the Next Pages

MODEL NUMBER	DRILL WIDTH	HOPPER SIZE (#)	ROW SPACING	NUMBER OF OPENERS	ESTIMATED WEIGHT	LIST PRICE
Three-Axis Hitch (2 pt Hitch)						
SF9435-30	30’	10’ (3)	7½”	48	19917	104,913.00
SF9435-30	30’	10’ (3)	10”	36	18267	92,904.00
SF9435-40	40’	10’ (1) & 7½’ (4)	7½”	64	24536	135,074.00
SF9435-40	40’	10’ (1) & 7½’ (4)	10”	48	22336	119,763.00
Draw Bar Hitch						
SF9435-30	30’	10’ (3)	7½”	48	19917	105,498.00
SF9435-30	30’	10’ (3)	10”	36	18267	94,605.00
SF9435-40	40’	10’ (1) & 7½’ (4)	7½”	64	24536	136,157.00
SF9435-40	40’	10’ (1) & 7½’ (4)	10”	48	22336	120,843.00

9435 SERIES SUNFLOWER THREE-SECTION FOLDING GRAIN DRILL

ORDER CODE	DESCRIPTION	APPROX. WEIGHT (LBS)	LIST PRICE

Select One Order Code from Each Group, 01 through 03.

Group 01 Base Machine 3-Section Folding Grain Drill

Three-Axis Hitch (2-Point Hitch)

SF9435-30-75INCH	94353000, 7½” Spacing	13317	62,084.00
SF9435-30-10INCH	94353001, 10” Spacing	13317	60,782.00
SF9435-40-75INCH	94354000, 7½” Spacing	15736	77,970.00
SF9435-40-10INCH	94354001, 10” Spacing	15736	76,934.00

Draw Bar Hitch

SF9435-30-75INCHDBH	94353002, 7½” Spacing	11950	62,669.00
SF9435-30-10INCHDBH	94353003, 10” Spacing.	11950	62,483.00
SF9435-40-75INCHDBH	94354002, 7½” Spacing	15050	79,053.00
SF9435-40-10INCHDBH	94354003, 10” Spacing.	15050	78,014.00

Group 02 Openers 15" Smooth Blade
(All Purpose with Parallel Links, Adjustable for No-Till, Min-Till & Conventional Seeding)

For SF9435-30

18000186S	48 Staggered Double Disc Openers 7½” Spacing	6120	39,181.00
18000187S	36 Staggered Double Disc Openers 10” Spacing	4590	29,386.00

For SF9435-40

18000188S	64 Staggered Double Disc Openers 7½” Spacing	8160	52,240.00
18000189S	48 Staggered Double Disc Openers 10” Spacing	6120	39,181.00

Group 03 Press Wheels Order 1 per Opener

7500341BS	2" x 13" Smooth Crown	10	76.00
7500343BS	3" x 13" Center Rib	10	76.00
7500344BS	3" x 13" Double Rib	10	76.00
7500340BS	4" x 12" Double Rib	10	76.00

9435 SERIES SUNFLOWER THREE-SECTION FOLDING GRAIN DRILL

ORDER CODE	DESCRIPTION	APPROX. WEIGHT (LBS)	LIST PRICE

OPTIONAL EQUIPMENT - For Current Machines ONLY

Legume / Grass Seed Box – Order Box plus ONE Attachment, either 7½" or 10" spacing

For SF9435-30

7500477RS	Legume / Grass Seed Box -SF9435-30	489	8,164.00
18000192S	Attachment for 7 ½" Spacing	168	3,718.00
18000193S	Attachment for 10" Spacing	126	3,021.00

For SF9435-40

7500476RS	Legume / Grass Seed Box -SF9435-40	651	10,692.00
18000190S	Attachment for 7 ½" Spacing	331	4,877.00
18000191S	Attachment for 10" Spacing	170	3,961.00

Opener Shields

18260BS	Opener Shield for SF9435-30	176	832.00
18261BS	Opener Shield for SF9435-40	304	1,032.00

Hydraulic Row Markers

2500172RS	Hydraulic Row Marker, SF9435-30	1020	6,545.00
2500170RS	Hydraulic Row Marker, SF9435-40	1070	7,161.00

Miscellaneous

18052RS	500 Gallon Elliptical, Liquid Fertilizer Tank & Saddle Assembly		2,224.00
2500164RS	Selector Valve Assembly (for Tractors with Less than 4 Hydraulic Outlets)	20	598.00
10854RS	Shaft and Bin Level Monitors (Includes one per section)		1,857.00
204-134S	Alfalfa Reducer ORDER ONE PER ROW		6.00
DR12017S	Seed Cup Plug (Order One Per Two Rows - Recommended)	1	1.00

9531 SERIES SUNFLOWER FOLDING FERTILIZER GRAIN DRILL

F.O.B. Beloit, KS

STANDARD CONFIGURATION

7-1/2" or 10" Row Spacing
Walk Boards
All-Purpose "Heads Up" Double Disc Openers with 15" Smooth Blades
Sight Glasses (2 per Box)
Floating Drives with 8 Ply, 9.5L x 15 Tires on Each Section
Heavy-duty Down Pressure Springs
Heavy-duty Main Lift with Four Cylinders (Two 4" Main Lift Cylinders, Two 3-1/2" Assist Lift Cylinders)
Internal Fluted Meter
Easy Adjust Seed Rate Adjustment Handle (1 per Section, 1/16" Increments)
3.75 Bushel per Foot Total Capacity
Hopper Capacity: 2.4 Bushel per Foot (Seed) and 120 lb. per Foot (Dry Fertilizer)
Seed Cup Dividers (Tents)
Maintenance Free Lift System (UHMW)
50 Drive Chain, with Spring Loaded Idlers
Automatic Road Lock on Transport
Hex Jack Shafts with Quick Change Cut Steel Sprockets
Warning Light Kit
(4) 3" Spindle and Eight Bolt Hubs (8,000 lb. Capacity, Main Frame)
(4) New 380/55R 16.5 Wheel and Tire Assembly (Main Frame)
(4) New 12 Ply 9.5L x 15 Tubeless Tires (Wings)
Acremeter
SMV Emblem

Press Wheels:
Choice of 2" x 13" smooth crown, 3" x 13" center rib, 3" x 13" double rib or 4" x 12" double rib
All purpose openers with parallel links, adjustable for no-till, min-till and conventional seeding.

These prices reflect the standard configuration. If items other than those listed in the standard configuration are ordered, then the quoted price below will change.

For Quotation Purposes Only – Please Order Items from the Groups on the Next Pages

MODEL NUMBER	DRILL WIDTH	HOPPER SIZE (#)	ROW SPACING	NUMBER OF OPENERS	ESTIMATED WEIGHT	LIST PRICE
Three-Axis Hitch (2-Point Hitch)						
SF9531-30	30’	10’ (3)	7½”	48	21059	113,513.00
SF9531-30	30’	10’ (3)	10”	36	19409	102,253.00
SF9531-40	40’	10’ (1) & 7½’ (4)	7½”	64	25679	144,524.00
SF9531-40	40’	10’ (1) & 7½’ (4)	10”	48	23479	129,141.00
Draw Bar Hitch						
SF9531-30	30’	10’ (3)	7½”	48	21059	116,298.00
SF9531-30	30’	10’ (3)	10”	36	19409	105,040.00
SF9531-40	40’	10’ (1) & 7½’ (4)	7½”	64	25679	145,750.00
SF9531-40	40’	10’ (1) & 7½’ (4)	10”	48	23479	130,367.00

SUNFLOWER

Mississippi State Contract Discount: 5%

9531 SERIES SUNFLOWER THREE-SECTION FOLDING GRAIN DRILL

ORDER CODE	DESCRIPTION	APPROX. WEIGHT (LBS)	LIST PRICE

Select One Order Code from Each Group, 01 through 03.

Group 01 Base Machine 3-Section Folding Grain Drill

Three-Axis Hitch (2-Point Hitch)

SF9531-30-75INCH	95313000, 7½” Spacing	14459	70,684.00
SF9531-30-10INCH	95313001, 10” Spacing	14459	70,131.00
SF9531-40-75INCH	95314000, 7½” Spacing	16879	87,420.00
SF9531-40-10INCH	95314001, 10” Spacing	16879	86,312.00

Draw Bar Hitch

SF9531-30-75INCHDBH	95313002, 7½” Spacing	14459	73,469.00
SF9531-30-10INCHDBH	95313003, 10” Spacing	14459	72,918.00
SF9531-40-75INCHDBH	95314002, 7½” Spacing	16879	88,646.00
SF9531-40-10INCHDBH	95314003, 10” Spacing	16879	87,538.00

Group 02 Openers 15" Smooth Blade Disc Openers

(All Purpose with Parallel Links, Adjustable for No-Till, Min-Till & Conventional Seeding)

For SF9531-30

18000186S	48 Staggered Double Disc Openers 7½” Spacing	6120	39,181.00
18000187S	36 Staggered Double Disc Openers 10” Spacing	4590	29,386.00

For SF9531-40

18000188S	64 Staggered Double Disc Openers 7½” Spacing	8160	52,240.00
18000189S	48 Staggered Double Disc Openers 10” Spacing	6120	39,181.00

Group 03 Press Wheels Order 1 per Opener

7500341BS	2" x 13" Smooth Crown	10	76.00
7500343BS	3" x 13" Center Rib	10	76.00
7500344BS	3" x 13" Double Rib	10	76.00
7500340BS	4" x 12" Double Rib	10	76.00

9531 SERIES SUNFLOWER THREE-SECTION FOLDING GRAIN DRILL

OPTIONAL EQUIPMENT - For Current Machines ONLY

Legume / Grass Seed Box – Order Box plus ONE Attachment, either 7½" or 10" spacing

ORDER CODE	DESCRIPTION	APPROX. WEIGHT (LBS)	LIST PRICE
For SF9531-30			
7500491RS	Legume / Grass Seed Box for SF9531-30	489	8,164.00
18000202S	Attachment for 7½" Spacing	168	3,718.00
18000203S	Attachment for 10" Spacing	126	3,021.00
For SF9531-40			
7500492RS	Legume / Grass Seed Box for SF9531-40	651	10,692.00
18000204S	Attachment for 7½" Spacing	331	4,877.00
18000205S	Attachment for 10" Spacing	170	3,961.00
Opener Shields			
19320BS	Opener Shield for SF9531-30	176	832.00
18261BS	Opener Shield for SF9531-40	304	1,032.00
Hydraulic Row Markers			
2500172RS	Hydraulic Row Marker, SF9531-30	1020	6,545.00
2500170RS	Hydraulic Row Marker, SF9531-40	1070	7,161.00
Miscellaneous			
18052RS	500 Gallon Elliptical, Liquid Fertilizer Tank & Saddle Assembly		2,224.00
2500164RS	Selector Valve Assembly (for Tractors with Less than 4 Hydraulic Outlets)	20	598.00
10854RS	Shaft and Bin Level Monitors (Includes one per section)		1,857.00
204-134S	Alfalfa Reducer ORDER ONE PER ROW		6.00
DR12017S	Seed Cup Plug (Order One Per Two Rows - Recommended)	1	1.00

Mississippi State Contract Discount: 5%

9610 SERIES MIN-TILL 3-POINT GRAIN DRILL

F.O.B. BELOIT, KS

STANDARD CONFIGURATION

6", 7-1/2" or 10" Row Spacing
Double Disc "Heads Up" Openers with 15" Smooth Blades
Soil Control Devices
Heavy-duty Pneumatic Down Pressure System
Floating Drives with 8 Ply, 9.5L x 15 Tires
50 Drive Chain with Spring Loaded Idlers
3.0 Bushel per Foot Boxes
Acremeter
Folding Walk Boards with Boarding Assist Handle
Front Mounted Seed Adjustment
Internal Fluted (6 Flutes) Seed Meters
Seed Cup Dividers (Tents)
Seed Level Indicator and Sight Window in Each Hopper
Hex Jack Shafts with Quick Change Sprockets
SMV Emblem
Warning Light Kit

Choice of press wheels: 2” x 13” smooth crown, 3" x 13" center rib, 3" x 13" double rib or 4" x 12" double rib

These prices reflect the standard configuration. If items other than those listed in the standard configuration are ordered, then the quoted price below will change.

For Quotation Purposes Only – Please Order Items from the Groups on the Next Pages

MODEL NUMBER	DRILL WIDTH	HOPPER SIZE (#)	ROW SPACING	NUMBER OF OPENERS	ESTIMATED WEIGHT	LIST PRICE
SF9610-15	15'	7 ½' (2)	6"	30	6800	45,694.00
SF9610-15	15'	7 ½' (2)	7 ½"	24		40,966.00
SF9610-15	15'	7 ½' (2)	10"	18		35,746.00
SF9610-20	20'	10' (2)	6"	40	8900	57,954.00
SF9610-20	20'	10' (2)	7 ½"	32		51,322.00
SF9610-20	20'	10' (2)	10"	24		44,475.00

9610 SERIES MIN-TILL 3-POINT GRAIN DRILL

ORDER CODE	DESCRIPTION	APPROX. WEIGHT (LBS)	LIST PRICE
	Select One Order Code from Each Group, 01 through 04.		
Group 01 Base Machine - 3-Point Grain Drill			
SF9610-15-6INCH	96101500, 6” Spacing	1614	22,008.00
SF9610-15-75INCH	96101501, 7.5" Spacing	1614	21,814.00
SF9610-15-10INCH	96101502, 10" Spacing	1614	21,173.00
SF9610-20-6INCH	96102000, 6" Spacing	2000	26,799.00
SF9610-20-75INCH	96102001, 7.5" Spacing	2000	26,186.00
SF9610-20-10INCH	96102002, 10" Spacing	2000	25,463.00
Group 02 Openers 15" Smooth Blade Conventional Seeding			
For SF9610-15			
18000213S	30 Conventional Opener, 6" Spacing		20,320.00
18000214S	24 Conventional Opener, 7.5" Spacing		16,242.00
18000215S	18 Conventional Opener, 10" Spacing		12,119.00
For SF9610-20			
18000210S	40 Conventional Opener, 6" Spacing		27,029.00
18000211S	32 Conventional Opener, 7.5" Spacing		21,618.00
18000212S	24 Conventional Opener, 10" Spacing		16,102.00
Group 03 Air System			
7500509RS	Air Compressor / Tank Assembly without TPH		1,086.00
7500510RS	Air Compressor / Tank Assembly with TPH		1,142.00
Group 04 Press Wheels (Order One per Opener)			
7500512BS	4" x 12" Double Rib Nylon Rim, Press Wheel		76.00
7500513BS	2" X 13" SM Nylon Rim, Press Wheel		76.00
7500514BS	3" x 13" Center Rib Nylon Rim, Press Wheel		76.00
7500515BS	3" x 13" Double Rib Nylon Rim, Press Wheel		76.00

9610 SERIES MIN-TILL 3-POINT GRAIN DRILL

ORDER CODE	DESCRIPTION	APPROX. WEIGHT (LBS)	LIST PRICE
Seed Boxes and Attachments			**Optional**
Small Seed/Legume Seed Box - Order Box plus ONE Mounting Attachment, either 6", 7 ½" or 10" spacing			
For SF9610-15			
7500526RS	Small Seed/Legume Grass Seed Box	297	8,830.00
18000223S	Mounting Attachment for 6" Spacing	96	1,438.00
18000224S	Mounting Attachment for 7½" Spacing	84	1,253.00
18000225S	Mounting Attachment for 10" Spacing	63	1,109.00
For SF9610-20			
7500523RS	Small Seed/Legume Grass Seed Box	434	8,804.00
18000220S	Mounting Attachment for 6" Spacing	124	1,838.00
18000221S	Mounting Attachment for 7½" Spacing	112	1,700.00
18000222S	Mounting Attachment for 10" Spacing	84	1,477.00
Native Grass Seed Box - Order Box plus ONE Mounting Attachment, either 7 ½" or 10" spacing			
For SF9610-15			
7500532RS	Native Grass Box	892	10,169.00
18000228S	24 Native Grass Attach, 7.5" Spacing		4,440.00
18000229S	18 Native Grass Attach, 10" Spacing		3,511.00
For SF9610-20			
7500529RS	Native Grass Box	1168	11,979.00
18000226S	32 Native Grass Attach, 7.5" Spacing		5,990.00
18000227S	24 Native Grass Attach, 10" Spacing		4,513.00
Small Seed & Native Grass Seed Box - Order Box plus ONE Mounting Attachment either 7 ½" or 10" spacing			
For SF9610-15			
7500520RS	Small Seed and Native Grass Box	1171	18,108.00
18000218S	24 Small Seed and Native Grass Attach, 7.5" Spacing		5,432.00
18000219S	18 Small Seed and Native Grass Attach, 10" Spacing		4,262.00
For SF9610-20			
7500517RS	Small Seed and Native Grass Box	1555	19,780.00
18000216S	32 Small Seed and Native Grass Attach, 7.5" Spacing		7,298.00
18000217S	24 Small Seed and Native Grass Attach, 10" Spacing		5,683.00
OPTIONAL EQUIPMENT - For Current Machines ONLY			
Hydraulic Row Markers			
2500183RS	Hydraulic Row Markers for SF9610-15	500	4,215.00
2500185RS	Hydraulic Row Markers for SF9610-20	525	4,230.00
Transport Pull Hitches			
2500100RS	Transport Pull Hitch		8,148.00
Miscellaneous			
204-134S	Alfalfa Reducer ORDER ONE PER ROW		6.00
DR12017S	Seed Cup Plug (Order One Per Two Rows - Recommended)		1.00

9700 SERIES AIR-TILL DRILLS
F.O.B. WAHPETON, ND

STANDARD CONFIGURATION

Air Till Drills
High Strength All Welded 4" x 4" x 3/8" Tube Frame
(4) 13.5 x 31 12 ply Tires with Eight Bolt Wheels (Main Frame Front 9730-40)
(4) 13.5 x 31 12 ply Tires with Six Bolt Wheels (Wings 9730-40)
(4) 440 /55R18 Tires with Eight Bolt Wheels (Main Frame Front 9750-50 and 60)
(8) 13.5 x 31 12 ply Tires with Six Bolt Wheels (Wings 9750-50 and 60)
(4) 13.5 x 31 12 ply Tires with Eight Bolt Wheels (Main Frame Rear 9730-40, 50 and 60)
Waking Beam Mounted 26/6.50-15 Pneumatic Packer Tires
650 lb. Edge-On Release Shanks - 10" or 15" Shank Spacing
Heavy Duty Screw Type Jack
Stop Collar Depth Control
Safety Chain
Transport Warning Lights
Wing Locks

Dimensions	9730-40	9750-50	9750-60
Sections	3	5	5
10" Row Spacing in (cm)	10 (25.4)	10 (25.4)	10 (25.4)
10" Row Spacing # Seed Openers	48	60	72
15" Row Spacing in (cm)	N/A	15 (38.1)	15 (38.1)
15" Row Spacing # Seed Openers	N/A	40	48
Working Width ft (m)	40 (12.2)	50 (15.2)	60 (18.3)
Transport Width ft (m)	21 (6.4)	21 (6.4)	21 (6.4)
Transport Height ft (m)	17 (5.2)	15.5 (4.7)	17 (5.2)
Weight lbs (kg) 10" Spacing	29500 (13,381)	38,500 (17,463)	41,500 (18,824)
Weight lbs (kg) 15" Spacing	N/A	33,500 (15,331)	36,500 (16,556)
Tractor Requirement	360 HP	450 HP	540 HP

9700 SERIES AIR-TILL DRILLS

ORDER CODE		DESCRIPTION	APPROX. WEIGHT (LBS)	LIST PRICE

Select One Order Code from Each Group, 01 through 07 as Required.

Group 01 Base Machine - Air-Till Drill with 10" Spacing

SF9730-4010	243998AW	40 ft. 10" Spacing Air-Till Drill	29,500	118,632.00
SF9750-5010	66720AW	50 ft. 10" Spacing Air-Till Drill	38,500	153,263.00
SF9750-5015	245678AW	50 ft. 15" Spacing Air-Till Drill	33,500	137,318.00
SF9750-6010	247900AW	60 ft. 10" Spacing Air-Till Drill	41,500	165,904.00
SF9750-6015	67460AW	60 ft. 15" Spacing Air-Till Drill	36,500	148,315.00

Group 02 Shank Assembly (Shanks only, less seed boots and openers)

	9730-4010	
66536AW	(48) Edge-on Shank	In Base
66535AW	(48) C-Shank	No Charge
	9750-5010	
66721AW	(60) Edge-on Shank	In Base
66722AW	(60) C-Shank	No Charge
	9750-5015	
246799AW	(40) Edge-on Shank	In Base
246800AW	(40) C-Shank	No Charge
	9750-6010	
66532AW	(72) Edge-on Shank	In Base
66531AW	(72) C-Shank	No Charge
	9750-6015	
66536AW	(48) Edge-on Shank	In Base

Group 03 Manifold Kit

	For 9730-4010	
35713AW	No Manifold Kit	No Charge
36173AW	Manifold Kit - Single Shoot	3,649.00
344139AW	Manifold Kit - Dual Shoot (Includes Single Shoot)	7,303.00
	For 9750-5010	
35713AW	No Manifold Kit	No Charge
344132AW	Manifold Kit - Single Shoot	8,351.00
344133AW	Manifold Kit - Dual Shoot (Includes Single Shoot)	16,375.00
	For 9750-5015	
35713AW	No Manifold Kit	No Charge
344134AW	Manifold Kit - Single Shoot	7,800.00
344135AW	Manifold Kit - Dual Shoot (Includes Single Shoot)	15,057.00
	For 9750-6010	
35713AW	No Manifold Kit	No Charge
344136AW	Manifold Kit - Single Shoot	9,450.00
344137AW	Manifold Kit - Dual Shoot (Includes Single Shoot)	19,455.00
	For 9750-6015	
35713AW	No Manifold Kit	No Charge
344138AW	Manifold Kit - Single Shoot	8,020.00
344156AW	Manifold Kit - Dual Shoot (Includes Single Shoot)	15,937.00

9700 SERIES AIR-TILL DRILLS

ORDER CODE	DESCRIPTION	APPROX. WEIGHT (LBS)	LIST PRICE

Select One Order Code from Each Group, 01 through 06 as Required.

Group 04 Air Cart Configuration (Select One)

	For 9730 Series		
344068AW	Single Fan - Tow Behind (280 bu. Cart only) (5")		3,685.00
344069AW	Single Fan - Tow Behind (335 bu. Cart only) (6")		4,043.00
344070AW	Single Fan - Tow Behind (380 and 525 bu. Cart only) *(Requires Dolly Kit)		3,675.00
344071AW	Single Fan - Tow Between (380 and 525 bu. Cart only)		2,780.00
344072AW	Dual Fan - Tow Behind (380 and 525 bu. Cart only) *(Requires Dolly Kit)		6,874.00
344073AW	Dual Fan - Tow Between (380 and 525 bu. Cart only)		4,850.00
	For 9750 Series		
344074AW	Single Fan - Tow Behind (280 bu. Cart only) (5")		3,675.00
344075AW	Single Fan - Tow Behind (335 bu. Cart only) (6")		4,043.00
344076AW	Single Fan - Tow Behind (380 and 525 bu. Cart only) *(Requires Dolly Kit)		3,685.00
344077AW	Single Fan - Tow Between (380 and 525 bu. Cart only)		2,780.00
344078AW	Dual Fan - Tow Behind (380 and 525 bu. Cart only) *(Requires Dolly Kit)		6,874.00
344079AW	Dual Fan - Tow Between (380 and 525 bu. Cart only)		4,850.00

Note: * Requires Dolly Kit (See 9930 Series Options)

Group 05 Wireless Blockage Monitor (Optional)

	All Models		
320848AW	No Blockage Monitor		In Base
	For 9730-4010		
344084AW	All Run Blockage-Single Shoot (2-Head, 48-1.25" Sensors)		6,372.00
344140AW	All Run Blockage-Dual Shoot (Includes Single)		12,252.00
344141AW	Zone Blockage Dual Shoot (Includes Single)		8,199.00
	For 9750-5010		
344157AW	All Run Blockage-Single Shoot (6-Head, 60-1.25" Sensors)		10,769.00
344142AW	All Run Blockage-Dual Shoot (Includes Single)		16,375.00
344143AW	Zone Blockage-Dual Shoot (Includes Single)		11,869.00
	For 9750-5015		
344158AW	All Run Blockage-Single Shoot (6-Head, 40-1.25" Sensors)		7,800.00
344144AW	All Run Blockage-Dual Shoot (includes Single)		12,528.00
344145AW	Zone Blockage Dual Shoot (includes Single)		8,900.00
	For 9750-6010		
344052AW	All Run Blockage-Single Shoot (6-Head, 72-1.25" Sensors)		11,869.00
344146AW	All Run Blockage-Dual Shoot (Includes Single)		18,685.00
344147AW	Zone Blockage-Dual Shoot (Includes Single)		14,067.00
	For 9750-6015		
344159AW	All Run Blockage-Single Shoot (6-Head, 48-1.25" Sensors)		9,560.00
344148AW	All Run Blockage-Dual Shoot (includes Single)		14,176.00
344149AW	Zone Blockage Dual Shoot (includes Single)		10,769.00

9700 SERIES AIR-TILL DRILLS

ORDER CODE	DESCRIPTION	APPROX. WEIGHT (LBS)	LIST PRICE
Group 06 Display for Wireless Blockage Monitor			
320849AW	No Display for Wireless Blockage Monitor		No Charge
320435AW	Display for Wireless Blockage Monitor		606.00
Group 07 Shipping Configuration (Select One)			
344062AW	Haul Out (Freight not Included) for 9730 Series		388.00
344064AW	Haul Out (Freight not Included) for 9750 Series		388.00
OPTIONAL EQUIPMENT			
36152AW	NH3 Electronics Kit **ALL MODELS**		1,269.00

Note: SB4 Seed Boots fit Edge Shanks Only. C-Shank Openers and Seed Boots must be sourced locally.

	For 9730-4010		
66909AW	Disc Levelers (back two ranks + 1)		8,360.00
66726AW	Disc Leveler (every shank)		16,052.00
34799AW	7" LDC Sweeps		3,696.00
66992AW	SB4 Boots with Splitters		6,599.00
	For 9750-5010		
66910AW	Disc Levelers (back two ranks + 1)		10,363.00
66727AW	Disc Levelers (every shank)		20,053.00
34800AW	7" LDC Sweeps		4,618.00
66993AW	SB4 Boots with Splitters		8,246.00
	For 9750-5015		
67923AW	Disc Levelers (back two ranks + 1)		7,037.00
67919AW	Disc Levelers (every shank)		13,413.00
344017AW	Coulter Kit (every shank)		18,035.00
67927AW	7" LDC Sweeps		3,079.00
67928AW	SB4 Boots with Splitters		5,497.00
	For 9750-6010		
66911AW	Disc Levelers (back two ranks + 1)		12,371.00
66728AW	Disc Levelers (every shank)		24,080.00
34801AW	7" LDC Sweeps		5,544.00
66994AW	SB4 Boots with Splitters		9,897.00
	For 9750-6015		
66909AW	Disc Levelers (back two ranks + 1)		8,360.00
66726AW	Disc Levelers (every shank)		16,052.00
344018AW	Coulter Kit (every shank)		21,637.00
34799AW	7" LDC Sweeps		3,696.00
66992AW	SB4 Boots with Splitters		6,599.00

9700 SERIES AIR-TILL DRILLS

ORDER CODE	DESCRIPTION	APPROX. WEIGHT (LBS)	LIST PRICE
Factory Assembly (Net prices on assembly - discounts do not apply)			
	For 9730-4010		
35154AW	Base Unit		6,599.00
67467AW	Dual Shoot Manifold		606.00
67466AW	All Run Blockage - Single Shoot		497.00
344088AW	Zone Blockage - Dual Shoot		745.00
344089AW	All Run Blockage - Dual Shoot		989.00
	For 9750-5010		
35155AW	Base Unit		8,908.00
67470AW	Dual Shoot Manifold		1,429.00
67469AW	All Run Blockage - Single Shoot		606.00
344085AW	Zone Blockage - Dual Shoot		911.00
344086AW	All Run Blockage - Dual Shoot		1,211.00
	For 9750-5015		
67929AW	Base Unit		7,915.00
344160AW	Dual Shoot Manifold		1,209.00
67931AW	All Run Blockage - Single Shoot		495.00
344152AW	Zone Blockage - Dual Shoot		605.00
344153AW	All Run Blockage - Dual Shoot		990.00
	For 9750-6010		
35156AW	Base Unit		9,897.00
67473AW	Dual Shoot Manifold		1,542.00
67472AW	All Run Blockage - Single Shoot		663.00
344150AW	Zone Blockage - Dual Shoot		962.00
344087AW	All Run Blockage - Dual Shoot		1,320.00
	For 9750-6015		
67464AW	Base Unit		8,576.00
344161AW	Dual Shoot Manifold		1,319.00
67474AW	All Run Blockage - Single Shoot		549.00
344154AW	Zone Blockage - Dual Shoot		660.00
344155AW	All Run Blockage - Dual Shoot		1,100.00

Mississippi State Contract Discount: 5%

9800 SERIES SINGLE DISC DRILLS

F.O.B. WAHPETON, ND

STANDARD CONFIGURATION

Air Drills
High Strength All Welded 6" x 8" and 4" x 8" Tube Frame; 3" x 5" Steel Tube Toolbars
Tires - 440/55R 18IMP Main, 17.5 8ply Wing
4 Walking Tandems with 3" Walking Beam Pivots and 3" Slip-in Spindles
4 5" x 30" Wing Fold Cylinders
Rephasing Lift System with Depth Control Collars and Chart
Toolbars Spaced at 30 inches
Toolbar and Wing Lock-ups
Pneumatic Packer Tires with Three Position Lateral Adjustment; Each Tire Packs 2 Seed Rows
6-9" (15-23cm) or 6-24" (15-61cm) Paired Seed Rows
18" Opener Disc Blades
Hydraulic Row Unit Down Pressure with Control Box
Air Cart Hydraulic and Electrical Connection Bulkhead
Heavy Duty Screw Type Jack
Safety Chain
Transport Warning Lights
Caster Lock on Rear Hydraulic Lift Assist

Dimensions	9830-30	9830-40F	9830-40HLA	9850-50	9850-60
Sections	3	3	3	5	5
Number of Seed Openers 6-9" / 6-24" Spacing	48 / 24	64 / 32	64 / 32	80 / 40	96 / 48
Toolbars	12	16	16	20	24
Mid-Row Banders - Optional	Yes	No	Yes	Yes	Yes
Working Width - ft (m)	30 (9.1)	40 (12.2)	40 (12.2)	50 (15.2)	60 (18.3)
Transport Width - ft (m)	14' 3" (4.3)	18' 11" (5.8)	18' 11" (5.8)	21' 6" (15.2)	21' 6" (15.2)
Transport Height - ft (m) Min - Max	14'-15' 6" (4.42-4.72)	16'-17' 10" (5.13-5.44)	16'-17' 10" (5.13-5.44)	16' 4"-18' 4" (4.98-5.59)	16'-17' 10" (5.13-5.43)
Weight - lbs (kg)	21,200 (9,616)	26,500 (12,020)	29,500 (13,380)	39,000 (17,690)	42,500 (19,278)
Tractor Requirement	200-300 HP	250-350 HP	300-400 HP	350-450 HP	400-500 HP

9800 SERIES SINGLE DISC DRILLS

ORDER CODE		DESCRIPTION	APPROX. WEIGHT (LBS)	LIST PRICE

Select One Order Code from Each Group, 01 through 07 as Required.

Group 01 Base Machine - Single Disc Drill

SF9830-30	67441AW	30 ft. Single Disc Drill	21200	75,597.00
SF9830-40F	66551AW	40 ft. Single Disc Drill	26500	82,154.00
SF9830-40HLA	320845AW	40 ft. Single Disc Drill with Hydraulic Lift Assist	26500	97,001.00
SF9850-50	320846AW	50 ft. Single Disc Drill with Hydraulic Lift Assist	39000	129,378.00
SF9850-60	320847AW	60 ft. Single Disc Drill with Hydraulic Lift Assist	42500	134,730.00

Group 02 Rear Hitch - for SF9830-30 and SF9830-40F

35969AW	Light Package, Without Rear Hitch (for Tow Between Cart Only).	(3,557.00)
35966AW	Rear Hitch - Floating, with Pintle Receiver	In Base
320668AW	Heavy Rear Hitch. (Required for Tow Behind 3800 or 5250)	18,326.00
36134AW	Rear Hitch - Non Sunflower Cart 9830-30. (Tow Behind Cart with Front Caster)	No Charge
36074AW	Rear Hitch - Non Sunflower Cart 9830-40F (Tow Behind Cart with Front Caster)	No Charge

Group 03 Rear Toolbar Assembly

For 9830-30

320166AW	Rear Toolbars - 6-9" Paired Row (48 Seed Openers).	35,835.00
320571AW	Rear Toolbars - 6-9" Paired Row with Mid-Row Banders (48 Seed / 24 Bander)	55,189.00
321444AW	30’ Rear Toolbars 6-9" Paired Row. (Rock Conditions, increases opener blade fore and aft spacing to 16" will not accommodate Mid-Row Banders) Seed Only Openers	36,143.00
320167AW	Rear Toolbars - 6-24" Paired Row (24 Seed Openers).	19,567.00
320728AW	Rear Toolbars - 6-24" Paired Row w/ Mid-Row Banders (24 Seed / 12 Bander)	31,549.00

For 9830-40F

320180AW	Rear Toolbars - 6-9" Paired Row (64 Seed Openers).	48,264.00
320181AW	Rear Toolbars - 6-24" Paired Row (32 Seed Openers)	26,052.00
321445AW	40’ Rear Toolbars 6-9" Paired Row. (Rock Conditions, increases opener blade fore and aft spacing to 16" will not accommodate Mid-Row Banders) Seed Only Openers	48,051.00

Mississippi State Contract Discount: 5%

9800 SERIES SINGLE DISC DRILLS

ORDER CODE	DESCRIPTION	APPROX. WEIGHT (LBS)	LIST PRICE
	For 9830-40HLA		
320593AW	Rear Toolbars - 6-9" Paired Row (64 Seed Openers).		48,264.00
320572AW	Rear Toolbars - 6-9" Paired Row with Mid-Row Banders . . . . . (64 Seed / 32 Bander)		74,098.00
320594AW	Rear Toolbars - 6-24" Paired Row (32 Seed Openers).		26,600.00
320729AW	Rear Toolbars - 6-24" Paired Row w/ Mid-Row Banders . . . . . (32 Seed / 16 Bander)		42,549.00
	For 9850-50		
320182AW	Rear Toolbars - 6-9" Paired Row (80 Seed Openers).		60,137.00
320573AW	Rear Toolbars - 6-9" Paired Row with Mid-Row Banders . . . . . (80 Seed / 40 Bander)		92,349.00
321130AW	50’ Rear Toolbars 6-9" Paired Row. . . . . (Rock Conditions, increases opener blade fore and aft spacing to 16" will not accommodate Mid-Row Banders) Seed Only Openers		60,600.00
320183AW	Rear Toolbars - 6-24" Paired Row (40 Seed Openers).		33,087.00
320730AW	Rear Toolbars - 6-24" Paired Row w/ Mid-Row Banders . . . . . (40 Seed / 20 Bander)		53,109.00
	For 9850-60		
320185AW	Rear Toolbars - 6-9" Paired Row (96 Seed Openers).		72,121.00
320574AW	Rear Toolbars - 6-9" Paired Row with Mid-Row Banders . . . . . (96 Seed / 48 Bander)		110,818.00
320186AW	Rear Toolbars - 6-24" Paired Row (48 Seed Openers).		39,578.00
321447AW	60’ Rear Toolbars 6-9" Paired Row. . . . . (Rock Conditions, increases opener blade fore and aft spacing to 16" will not accommodate Mid-Row Banders) Seed Only Openers		71,862.00
320731AW	Rear Toolbars - 6-24" Paired Row w/ Mid-Row Banders . . . . . (48 Seed / 24 Bander)		63,668.00

9800 SERIES SINGLE DISC DRILLS

ORDER CODE	DESCRIPTION	APPROX. WEIGHT (LBS)	LIST PRICE
Group 04	**Manifold Kit**		
	For 9830-30		
35713AW	Without Manifold Kit		No Charge
67312AW	SF Manifold Kit - Single Shoot 6-9"		3,293.00
320910AW	SF Manifold Kit - Dual Shoot 6-9"		7,692.00
320233AW	SF Manifold Kit - Single Shoot 6-24"		2,852.00
320911AW	SF Manifold Kit - Dual Shoot 6-24"		6,496.00
35700AW	Non-SF Manifold Kit - Single Shoot 6-9"		6,481.00
320926AW	Non-SF Manifold Kit - Dual Shoot 6-9"		12,749.00
320235AW	Non-SF Manifold Kit - Single Shoot 6-24"		6,263.00
320927AW	Non-SF Manifold Kit - Dual Shoot 6-24"		12,320.00
	For 9830-40F and 9830-40HLA		
35713AW	Without Manifold Kit		No Charge
66683AW	SF Manifold Kit - Single Shoot 6-9"		7,475.00
320912AW	SF Manifold Kit - Dual Shoot 6-9"		12,201.00
320246AW	SF Manifold Kit - Single Shoot 6-24"		5,166.00
320913AW	SF Manifold Kit - Dual Shoot 6-24"		10,332.00
35691AW	Non-SF Manifold Kit - Single Shoot 6-9"		8,350.00
320928AW	Non-SF Manifold Kit - Dual Shoot 6-9"		16,709.00
320248AW	Non-SF Manifold Kit - Single Shoot 6-24"		7,914.00
320929AW	Non-SF Manifold Kit - Dual Shoot 6-24"		16,047.00
	For 9850-50		
35713AW	Without Manifold Kit		No Charge
36320AW	SF Manifold Kit - Single Shoot 6-9"		7,583.00
320914AW	SF Manifold Kit - Dual Shoot 6-9"		12,749.00
320261AW	SF Manifold Kit - Single Shoot 6-24"		5,715.00
320915AW	SF Manifold Kit - Dual Shoot 6-24"		11,336.00
35702AW	Non-SF Manifold Kit - Single Shoot 6-9"		9,670.00
320930AW	Non-SF Manifold Kit - Dual Shoot 6-9"		19,017.00
320262AW	Non-SF Manifold Kit - Single Shoot 6-24"		8,681.00
320931AW	Non-SF Manifold Kit - Dual Shoot 6-24"		17,589.00
	For 9850-60		
35713AW	Without Manifold Kit		No Charge
320272AW	SF Manifold Kit - Single Shoot 6-9"		7,800.00
320916AW	SF Manifold Kit - Dual Shoot 6-9"		12,971.00
320274AW	SF Manifold Kit - Single Shoot 6-24"		6,041.00
320917AW	SF Manifold Kit - Dual Shoot 6-24"		11,776.00
35704AW	Non-SF Manifold Kit - Single Shoot 6-9"		10,109.00
320932AW	Non-SF Manifold Kit - Dual Shoot 6-9"		20,115.00
320276AW	Non-SF Manifold Kit - Single Shoot 6-24"		8,681.00
320933AW	Non-SF Manifold Kit - Dual Shoot 6-24"		18,247.00

Note: Dual Shoot Manifold Kits include Single Shoot

9800 SERIES SINGLE DISC DRILLS

ORDER CODE	DESCRIPTION	APPROX. WEIGHT (LBS)	LIST PRICE
Group 05 Wireless Blockage Monitor (All Models - No Blockage in Base)			
320848AW	No Blockage Monitor		No Charge
	For 9830-30		
320585AW	Single All Run - 6-9" (2-Head, 48-1.25" Sensors)		6,372.00
320918AW	Dual All Run - 6-9" (Includes Single)		10,223.00
320919AW	Dual Zone - 6-9" (Includes Single)		8,350.00
320942AW	Single All Run - 6-24" (2-Head, 24-1.25" Sensors)		4,172.00
320586AW	Non-SF Cart, Single All Run - 6-9" (6-Head, 48-1.25" Sensors)		9,670.00
320934AW	Non-SF Cart, Dual All Run - 6-9" (Includes Single)		11,978.00
320935AW	Non-SF Cart, Dual Zone - 6-9" (includes Single)		10,881.00
320945AW	Non-SF Cart, Single All Run - 6-24" (6-Head, 24-1.25" Sensors)		7,475.00
	For 9830-40F and 9840-40HLA		
320587AW	Single All Run - 6-9" (4-Head, 64-1.25" Sensors)		9,452.00
320920AW	Dual All Run - 6-9" (Includes Single)		12,532.00
320921AW	Dual Zone - 6-9" (includes Single)		10,223.00
320822AW	Single All Run - 6-24" (4-Head, 32-1.25" Sensors)		6,481.00
320588AW	Non-SF Cart, Single All Run - 6-9" (8-Head, 64-1.25" Sensors)		12,309.00
320936AW	Non-SF Cart, Dual All Run - 6-9" (Includes Single)		15,389.00
320937AW	Non-SF Cart, Dual Zone - 6-9" (includes Single)		13,846.00
320946AW	Non-SF Cart, Single All Run - 6-24" (8-Head, 32-1.25" Sensors)		9,344.00
	For 9850-50		
320589AW	Single All Run - 6-9" (4-Head, 80-1.25" Sensors)		10,881.00
320922AW	Dual All Run - 6-9" (Includes Single)		17,697.00
320923AW	Dual Zone - 6-9" (Includes Single)		11,760.00
320943AW	Single All Run - 6-24" (4-Head, 40-1.25" Sensors)		7,252.00
320590AW	Non-SF Cart, Single All Run - 6-9" (8-Head, 80-1.25" Sensors)		13,738.00
320938AW	Non-SF Cart, Dual All Run - 6-9" (Includes Single)		17,589.00
320939AW	Non-SF Cart, Dual Zone - 6-9" (includes Single)		15,389.00
320947AW	Non-SF Cart, Single All Run - 6-24" (8-Head, 40-1.25" Sensors)		10,109.00
	For 9850-60		
320591AW	Single All Run - 6-9" (4-Head, 96-1.25" Sensors)		12,418.00
320924AW	Dual All Run - 6-9" (Includes Single)		19,898.00
320925AW	Dual Zone - 6-9" (Includes Single)		16,160.00
320944AW	Single All Run - 6-24" (4-Head, 48-1.25" Sensors)		8,023.00
320592AW	Non-SF Cart, Single All Run - 6-9" (8-Head, 96-1.25" Sensors)		15,166.00
320940AW	Non-SF Cart, Dual All Run - 6-9" (Includes Single)		19,898.00
320941AW	Non-SF Cart, Dual Zone - 6-9" (includes Single)		16,818.00
320948AW	Non-SF Cart, Single All Run - 6-24" (8-Head, 48-1.25" Sensors)		10,881.00
Group 06 Display for Wireless Monitor			
320849AW	No Display for Wireless Monitor		In Base
320435AW	Blockage Monitor Display		606.00

9800 SERIES SINGLE DISC DRILLS

ORDER CODE	DESCRIPTION	APPROX. WEIGHT (LBS)	LIST PRICE
Group 07	**Air Cart Configuration (Air Cart to Drill Manifold Mating Kits)**		
	For 9830-30		
320579AW	Single Fan - Tow Behind (280 bu. Cart Only) (5")		3,293.00
320580AW	Single Fan - Tow Behind (335 bu. Cart Only (6")		3,659.00
320567AW	Single Fan - Tow Behind (380 and 525 bu. Cart Only)		3,659.00
320569AW	Dual Fan - Tow Behind (380 and 525 bu. Cart Only)		5,109.00
320581AW	Single Fan - Tow Behind (380 and 525 bu. Cart Only)		3,293.00
320582AW	Dual Fan - Tow Between (380 and 525 bu. Cart Only)		5,109.00
320583AW	For Non-Sunflower Cart - Tow Behind		1,206.00
320584AW	For Non-Sunflower Cart - Tow Between		543.00
	For 9830-40F		
320565AW	Single Fan - Tow Behind (280 bu. Cart Only) (5")		3,293.00
320566AW	Single Fan - Tow Behind (335 bu. Cart Only (6")		3,659.00
320568AW	Single Fan - Tow Between (380 and 525 bu. Cart Only)		3,293.00
320570AW	Dual Fan - Tow Between (380 and 525 bu. Cart Only)		5,109.00
320583AW	For Non-Sunflower Cart - Tow Behind		1,206.00
320584AW	For Non-Sunflower Cart - Tow Between		543.00
	For 9830-40HLA		
320577AW	Single Fan - Tow Behind (280 bu. Cart Only) (5")		3,293.00
320578AW	Single Fan - Tow Behind (335 bu. Cart Only (6")		3,659.00
320567AW	Single Fan - Tow Behind (380 and 525 bu. Cart Only)		3,659.00
320569AW	Dual Fan - Tow Behind (380 and 525 bu. Cart Only)		5,109.00
320568AW	Single Fan - Tow Between (380 and 525 bu. Cart Only)		3,293.00
320570AW	Dual Fan - Tow Between (380 and 525 bu. Cart Only)		5,109.00
320583AW	For Non-Sunflower Cart - Tow Behind		1,206.00
320584AW	For Non-Sunflower Cart - Tow Between		543.00
	For 9850-50		
320578AW	Single Fan - Tow Behind (335 bu. Cart Only (6")		3,659.00
320567AW	Single Fan - Tow Behind (380 and 525 bu. Cart Only)		3,659.00
320569AW	Dual Fan - Tow Behind (380 and 525 bu. Cart Only)		5,109.00
320568AW	Single Fan - Tow Between (380 and 525 bu. Cart Only)		3,293.00
320570AW	Dual Fan - Tow Between (380 and 525 bu. Cart Only)		5,109.00
320583AW	For Non-Sunflower Cart - Tow Behind		1,206.00
320584AW	For Non-Sunflower Cart - Tow Between		543.00
	For 9850-60		
320578AW	Single Fan - Tow Behind (335 bu. Cart Only (6")		3,659.00
320567AW	Single Fan - Tow Behind (380 and 525 bu. Cart Only)		3,659.00
320569AW	Dual Fan - Tow Behind (380 and 525 bu. Cart Only)		5,109.00
320583AW	For Non-Sunflower Cart - Tow Behind		1,206.00
Group 08	**Shipping Options - Freight Not Included**		
320178AW	Tow Out for 9830-30 and 9830-40F		585.00
320179AW	Haul Out for 9830-30 and 9830-40F		585.00
320184AW	Tow Out for 9830-40HLA, 9850-50 and 9850-60		585.00
320219AW	Haul Out for 9830-40HLA, 9850-50 and 9850-60		585.00

Mississippi State Contract Discount: 5%

9800 SERIES SINGLE DISC DRILLS

ORDER CODE	DESCRIPTION	APPROX. WEIGHT (LBS)	LIST PRICE
Dry Fertilizer and NH3 Application - Requires Dual Shoot Manifold and Cart			
	9830-30		
36140AW	Dry Fertilizer Tube - No Scraper (For use with Mid-Row Bander) Used without NH3		1,315.00
320240AW	NH3 Scraper and Injector (For use with Mid-Row Bander). . . . . Requires NH3 Electronics (36152AW)		3,732.00
320239AW	Dry Fertilizer Tube (For use with Mid-Row Bander) . . . . . Requires NH3 Scraper (320240AW)		984.00
36152AW	NH3 Electronics Kit		1,269.00
67445AW	Dry Fertilizer Tubes (For use without Mid-Row Bander). . . . . Broadcasts between Seed Openers		714.00
	9830-40HLA		
36142AW	Dry Fertilizer Tube - No Scraper (For use with Mid-Row Bander) Used without NH3		1,754.00
320259AW	NH3 Scraper and Injector (For use with Mid-Row Bander). . . . . Requires NH3 Electronics (36152AW)		4,943.00
320258AW	Dry Fertilizer Tube (For use with Mid-Row Bander) . . . . . Requires NH3 Scraper (320240AW)		1,315.00
36152AW	NH3 Electronics Kit		1,269.00
67042AW	Dry Fertilizer Tubes (For use without Mid-Row Bander). . . . . Broadcasts between Seed Openers		963.00
	9850-50		
36146AW	Dry Fertilizer Tube - No Scraper (For use with Mid-Row Bander) Used without NH3		2,195.00
320270AW	NH3 Scraper and Injector (For use with Mid-Row Bander). . . . . Requires NH3 Electronics (36152AW)		5,824.00
320269AW	Dry Fertilizer Tube (For use with Mid-Row Bander) . . . . . Requires NH3 Scraper (320240AW)		1,646.00
36152AW	NH3 Electronics Kit		1,259.00
67429AW	Dry Fertilizer Tubes (For use without Mid-Row Bander). . . . . Broadcasts between Seed Openers		1,237.00
	9850-60		
36150AW	Dry Fertilizer Tube - No Scraper (For use with Mid-Row Bander) Used without NH3		2,635.00
320283AW	NH3 Scraper and Injector (For use with Mid-Row Bander). . . . . Requires NH3 Electronics (36152AW)		7,361.00
320282AW	Dry Fertilizer Tube (For use with Mid-Row Bander) . . . . . Requires NH3 Scraper (320240AW)		1,978.00
36152AW	NH3 Electronics Kit		1,269.00
35359AW	Dry Fertilizer Tubes (For use without Mid-Row Bander). . . . . Broadcasts between Seed Openers		1,459.00

9800 SERIES SINGLE DISC DRILLS

ORDER CODE	DESCRIPTION	APPROX. WEIGHT (LBS)	LIST PRICE
OPTIONAL EQUIPMENT - For Current Machines ONLY			
Ballast Kit			
66977AW	Ballast Kit for 9830-30		2,226.00
34703AW	Ballast Kit for 9830-40		2,748.00
67430AW	Ballast Kit for 9850-50		3,955.00
35360AW	Ballast Kit for 9850-60		4,974.00
Note: Ballast Kits are recommended with Mid-Row Bander Option)			
	All Models		
36020AW	Rear Hitch Kit (Non-Sunflower Cart) (for 9830-40HLA, 9850-50 and 9850-60)		979.00
36060AW	Uniball Hitch Adapter (For use with Hydraulic Lift Assist or Floating Rear Hitch)		270.00
320575AW	Stalk Shield Kit for Seed Openers (Order One per Toolbar for 6-9" and Two per Toolbar for 6-24" Spacing)		68.00
320576AW	Stalk Shield Kit for Mid-Row Banders (Order One per Toolbar for 6-9" and Two per Toolbar for 6-24" Spacing)		36.00
320125AW	Deep Mid-Row Bander Stop Kit (One per Toolbar) (Not Available for 9840F) (Order One per Toolbar for 6-9" and Two per Toolbar for 6-24" Spacing)		33.00
320553AW	Packer Shim (One per Toolbar)		17.00

9800 SERIES SINGLE DISC DRILLS

ORDER CODE	DESCRIPTION	APPROX. WEIGHT (LBS)	LIST PRICE
Factory Assembly (Net Prices on Assembly - Discounts Do Not Apply)			
	9830-30		
67451AW	Base Unit		2,153.00
67449AW	Dual Shoot Manifold		755.00
320243AW	All Run Blockage - Single Shoot Manifold		383.00
320245AW	All Run Blockage - Dual Shoot Manifold		761.00
320244AW	Zone Blockage - Dual Shoot Manifold		580.00
	9830-40		
67321AW	Base Unit with Floating Hitch		2,583.00
36153AW	Base Unit with Hydraulic Lift Assist		3,215.00
67325AW	Dual Shoot Manifold		880.00
320255AW	All Run Blockage - Single Shoot Manifold		440.00
320257AW	All Run Blockage - Dual Shoot Manifold		880.00
320256AW	Zone Blockage - Dual Shoot Manifold		663.00
	9850-50		
67436AW	Base Unit		5,316.00
67434AW	Dual Shoot Manifold		1,133.00
320290AW	All Run Blockage - Single Shoot Manifold		570.00
320292AW	All Run Blockage - Dual Shoot Manifold		1,133.00
320291AW	Zone Blockage - Dual Shoot Manifold		854.00
	9850-60		
35367AW	Base Unit		5,875.00
35365AW	Dual Shoot Manifold		1,196.00
320286AW	All Run Blockage - Single Shoot Manifold		694.00
320288AW	All Run Blockage - Dual Shoot Manifold		1,388.00
320287AW	Zone Blockage - Dual Shoot Manifold		1,045.00

9900 SERIES AIR CARTS
F.O.B. FARGO, ND

STANDARD CONFIGURATION

Air Carts, Stainless Steel Construction on Tank and Meter and Meter Drive Components
Standard Equipment All Air Tanks
Formed 4" x 8" and 6" x 6" Steel Tube Frame
14 Gauge Stainless Steel Tanks
Stainless Steel Meter Components
Steel Lid Design
130" Wheel Base
Poly Flighting Auger with Hydraulic Drive
Highly Efficient 6" Air Stream
High Capacity Meter Flutes
ISO Electrical Components
Walk Over Tanks with Access Ladders
Safety Chain
Screw Type Jack
Flood Lights
Transport Warning Lights

Dimensions	9920-280	9920-335	9930-380	9930-525
Capacity	280 Bushels	335 Bushels	380 Bushels	525 Bushels
Compartments	2	2	3	3
Split (Front to Back)	112 bu. / 168 bu.	135 bu. / 200 bu.	128 bu. / 158 bu. / 94 bu.	175 bu. / 225 bu. / 125 bu.
Tow Behind	Yes	Yes	Yes	Yes
Tow Between	No	No	Optional	Optional
Drive	Ground/Hydraulic	Ground/Hydraulic	Hydraulic	Hydraulic
Working Height	12' 8" (3.86 m)	13' 4" (4.06 m)	15' (4.8 m)	17' (5.18 m)
Working Width	11' 5" (3.48 m)	11' 5" (3.48 m)	14' 6" (4.4 m)	16' 6" (4.95 m)
Working Length	27' (8.23 m)	27' (8.23 m)	30' 2" (9.54m)	30' 2" (9.54m)
Weight Empty (est.)	8,500 lb. (3,856 kg)	8,750 lb. (3,946 kg)	13,000 lb. (5,897 kg)	15,750 lb. (7,144 kg)
Fill Height	11' 2" (3.40 m)	11' 8" (3.56 m)	11' 2" (3.4 m)	11' 9" (3.58 m)
Shipping Height	9' 6" (2.89 m)	10' 3" (3.12 m)	9' 2" (2.8 m)	10' 5" (3.18 m)
Width	8' 4" (2.54 m)	8' 4" (2.54 m)	7' 6" (2.28 m)	7' 6" (2.28 m)
Length	19' 2" (5.84 m)	19' 2" (5.84 m)	28' 3" (8.61 m)	28' 3" (8.61 m)
Transport Width	14' 5" (4.4 m)	14' 5" (4.4 m)	14' 8" (4.5 m)	17' 6" (5.5 m)
Transport Height	12' 8" (3.9 m)	13' 5" (4.1 m)	14' 0" (4.3 m)	15' 4" (4.7 m)

SUNFLOWER

Mississippi State Contract Discount: 5%

9900 SERIES AIR CARTS

ORDER CODE	DESCRIPTION	APPROX. WEIGHT (LBS)	LIST PRICE
	Select One Order Code from Each Group, 01 through 08 as Required.		
Group 01	**Base Machine - Air Cart**		
9920-280	66401AW 280 bu. Air Cart, Two Compartments, Tow Behind	8500	60,821.00
9920-335	66402AW 335 bu. Air Cart, Two Compartments, Tow Behind	8750	66,877.00
9930-380	331000AW 380 bu. Air Cart, Three Compartments		85,538.00
9930-525	37001AW 525 bu. Air Cart, Three Compartments	15750	91,738.00
Group 02	**Rear Axle Spacing for 9920-280 and 9920-335**		
65941AW	120" (305 cm) for 9920-280 and 9920-335		In Base
65940AW	150" (380 cm) for 9920-280 and 9920-335		565.00
Group 03	**Tow Configuration for 9930-380 and 9930-525**		
37007AW	Tow Behind		In Base
37013AW	Tow Behind-Dual Fan/Dual Air Stream		10,886.00
37006AW	Tow Between		1,310.00
37012AW	Tow Between-Dual Fan/Dual Air Stream		10,172.00
Group 04	**Tires**		
330105AW	Tires, 18.4 x 26 R1 for 9920-280 and 9920-335		5,223.00
330106AW	Tires, 23.1 x 26 R1 for 9920-280 and 9920-335		6,599.00
331161AW	Singles, 800/70R38 173A8 for 9930-380		12,408.00
330104AW	Dual Tires, 620/70R42 for 9930-525		21,223.00
Group 05	**Meter Drives for 9920-280 and 9920-335**		
66446AW	Ground Drive, One Master Clutch for 120" Rear Axle		In Base
66447AW	Ground Drive, One Master Clutch for 150" Rear Axle		No Charge
67218AW	Hydraulic Drive - Two Meters		5,388.00
Group 06	**Monitors**		
330779AW	No Cab Kit (For use with Existing Virtual Terminal)		No Charge
330064AW	Monitor Cab Kit - Virtual Terminal (Full Color) C1000		2,992.00
330534AW	Monitor Cab Kit - Virtual Terminal (Full Color) C3000		5,658.00
Group 07	**Loading Augers with Plastic Flighting**		
330778AW	No Auger		No Charge
66100AW	10" (25 cm) Auger for 9920-280 and 9920-335		7,205.00
37009AW	10" (25 cm) Auger for 9930-380 and 9930-525		9,291.00
Group 08	**Shipping Options - Freight Not Included**		
330115AW	Tow Out for 9920-280 and 9920-335 (Includes Necessary Assembly)		No Charge
330116AW	Haul Out for 9920-280 and 9920-335 (Includes Necessary Assembly)		No Charge
331182AW	Tow Out / Haul Out, Over Width for 9930-380 (Includes Necessary Assembly)		No Charge
330079AW	Haul Out for 9930-380 and 9930-525 (Includes Necessary Assembly)		No Charge
330078AW	Tow Out for 9930-525 (Includes Necessary Assembly)		No Charge
330080AW	Haul Out, Over Width for 9930-525 (Includes Necessary Assembly)		No Charge

9900 SERIES AIR CARTS

ORDER CODE	DESCRIPTION	APPROX. WEIGHT (LBS)	LIST PRICE
OPTIONAL EQUIPMENT - For Current Machines ONLY			
Volume Options			
1012608AW	Medium Volume Meter Roll, 1/4" x 1/4" Bars		358.00
33851AW	Low Volume Meter Roll		311.00
67639AW	Fine Product Meter Roll (Canola)		311.00
66549AW	Low Volume Insert, for 9920-280 and 9930-380		388.00
66550AW	Low Volume Insert, for 9920-335 and 9930-525		419.00
330781AW	GPS Receiver SGR1 (GPS input for stand alone Monitor / Cab Kit)		1,408.00
36380AW	Dolly Kit (Not for Use with Single Disc Drill) (For 9930-380 and 9930-525 Cart)		12,753.00
331323AW	9930 Single Fan to Dual Fan Tow Between Cart		11,262.00
331324AW	9930 Single Fan to Dual Fan Tow Behind Cart		11,640.00
331326AW	9920 Ground Drive Conversion 120 inches to Ground Drive 150 inches		2,525.00
331327AW	9920 Ground Drive Conversion 150 inches to Ground Drive 120 inches		2,096.00
66337AW	Mesh Hopper		177.00
Drill Toolbar Accessories - For Use with Drills Other Than 9800 Series			
66449AW	Female Coupler Set		192.00

WHITE
PLANTERS

PLANTERS

Table of Contents

9000 Series Planters

9100 Pull-Type Rigid Frame Planters 3
9180 Forward Fold Planters 13
9200 Wing Fold Planters 25
9500 Narrow Row Folding Planters 33
9700 Toolbar Mounted Planters 43
9700 Stack-fold Mounted Planters 51
9800 Narrow Transport Folding Planters 61
9831 Narrow Transport, Narrow Row Folding Planter 77
9936 Large Frame Folding Planters on Tracks 83
9000 Series Dealer Installed Equipment 89
8000 Series Dealer Installed Equipment 105

9100 Pull-Type
Rigid Frame Planters

9100 Pull-Type Rigid Frame Planters

F.O.B. Hesston, Kansas

STANDARD EQUIPMENT

- 7" x 7" Rigid Frame
- Hydraulic Lift with all Cylinders, Hoses and Transport Lock-Up
- Planter Units with Air Metering, Chain Drive Seed Meter, 16" Double Disc Openers, 4.5"x 16" Walking Beam Gauge Wheels
- Direct Drive Quick Couplers
- Transport Wheels with 9.5L-15, 6 Ply Tires
- Highway Transport Lighting
- Highway Transport Chain
- Seed Drain Kit
- High Rate Sensors

Ground Drive Planters

- Central Blower, Manifold, Flow Control Valve and Air Pressure Gauge

	# Rows	Spacing	Center Frame	Wings	Transport Width	Transport Wheels	Total Wheels
Rigid Frames							
WP9106	6	30"	173"	—	193"	4	4
WP9108	8	30"	228"	—	249"	4	4

Ordering Instructions:
Planters are now available with many items Factory Installed.
Factory Installed items are not eligible for return to the factory.

1. Select One Order Code from Base, and One Order Code from Each Group as Required.
2. Order Required Seed Discs from 9000 Series Dealer Installed Section.
3. Additional Dealer Installed Items can be Ordered for these Models (such as Fertilizer Attachments) from this Chapter and from 9000 Series Dealer Installed Section.
4. Accepts Row Unit or Frame Mounted Tillage Attachments.

NOTE: Direct Drive requires 2 remote valves.

ORDER CODE	CATALOG NUMBER	DESCRIPTION	APPROX. WEIGHT (lb.)	LIST PRICE
PULL-TYPE RIGID FRAME PLANTERS				
WP9106	9106903	6 Row 30-inch Planter		21,634.00
WP9108	9108903	8 Row 30-inch Planter		26,499.00

ORDER CODE	CATALOG NUMBER	DESCRIPTION	APPROX. WEIGHT (lb.)	LIST PRICE
MARKERS - Order One Set per Planter				**Required**
6 Row Planter				
2-P201	6000263	Rigid Markers - Factory Installed	229	1,128.00
	6100094	Notched Marker Disc - Dealer Installed	41	458.00
2-P202	6000265	Without Markers		No Charge
	6000362	Without Marker Disc		No Charge
8 Row Planter				
2-P211	6000264	Folding Markers - Factory Installed	246	2,525.00
	6100094	Notched Marker Disc - Dealer Installed	41	458.00
	6001159	Flat Folding Break-Away Markers - Dealer Installed with Notched Marker Discs	950	5,554.00
2-P202	6000267	Without Markers		No Charge
	6000362	Without Marker Disc		No Charge
SEED HOPPERS AND METERS - See Order Requirements Below				**Required**
6 Row Planters				
5-HO12	6400866	Set of 6 Two-Bushel Hoppers and Meters - Factory Installed **Order one per Planter**	30	5,720.00
	6001647	Three-Bushel Hopper and Meter - Dealer Installed **Order one per Row**	35	929.00
5-HO10	6400865	Without Hoppers and Meters. **Order one per Planter**		No Charge
8 Row Planters				
5-HO12	6400981	Set of 8 Two-Bushel Hoppers and Meters - Factory Installed **Order one per Planter**	30	6,340.00
	6001647	Three-Bushel Hopper and Meter - Dealer Installed **Order one per Row**	35	929.00
5-HO10	6400880	Without Hoppers and Meters. **Order one per Planter**		No Charge

ORDER CODE	CATALOG NUMBER	DESCRIPTION	APPROX. WEIGHT (lb.)	LIST PRICE
◆◆Dealer Installed◆◆		**HYDRAULIC SUPPLY SYSTEM - Order One per Planter**		**Optional**
	6001047	540 RPM PTO Pump	37	1,524.00
	6001048	1000 RPM PTO Pump with 1-3/8 inch Spline Shaft	34	1,678.00
◆◆Dealer Installed◆◆		**CLOSING SYSTEM - Order One per Row**		**Required**
	6001650	Angled Bracket with Rubber Closing Wheels	19	287.00
	6001651	Angled Bracket with Cast Closing Wheels	54	331.00
	6001653	Single "V" Trench Press Wheel	20	273.00
	6001652	Angled Bracket without Closing Wheels (Order Closing Wheels from 9000 Series Dealer Installed Section)		163.00
	6001649	Without Closing Wheels		No Charge
◆◆Dealer Installed◆◆		**MONITOR SYSTEM - Order One per Planter**		**Required**
	6000806	SM300 Seed Population Monitor (Up to 8 Rows) (Requires Magnetic Ground Speed Sensor or Radar Ground Speed and Distance Sensing Gun)	25	1,625.00
	6000805	SM100 Seed Flow Monitor (Up to 8 Rows)	20	1,194.00
	6000100	Without Monitor		No Charge
◆◆Dealer Installed◆◆		**GROUND SPEED SENSOR - Order One per Planter**		**Required**
	6100059	Magnetic Ground Speed Sensor	4	160.00
	6000923	Radar Ground Speed and Distance Sensing Gun	15	1,049.00
	6000810	Without Ground Speed and Distance Sensing (Uses Existing Radar) (For Use with 6000805)		No Charge
➢➢Factory Installed⮜⮜		**ADDITIONAL EQUIPMENT - Order One per Planter**		**Optional**
33-BZ01	6400755	Blower Inlet Screen		99.00
9-A903	6400768	Transmission Shield		25.00
7-PS01	6400878	Row Unit Gauge Wheel Scrapers for 6 Row Planter		210.00
7-PS01	6400989	Row Unit Gauge Wheel Scrapers for 8 Row Planter		280.00
	71428520W	Ship Safe Preservative Coating (Recommended for Protection When Shipped in Winter Months)		586.00

ORDER CODE	CATALOG NUMBER	DESCRIPTION	APPROX. WEIGHT (lb.)	LIST PRICE
➢➢Factory Installed⮜⮜		**DOWN PRESSURE SYSTEM - Order One per Planter**		**Required**
6 Row Planters				
23-KB12	6400870	Heavy Duty Down Pressure Springs	12	1,215.00
23-KB11	6400869	Standard Duty Down Pressure Springs . . . . . (Not Recommended with Row Unit Mounted Attachments)	7	394.00
23-KB10	6400027	Without Down Pressure Springs		No Charge
8 Row Planters				
23-KB12	6400983	Heavy Duty Down Pressure Springs	12	1,621.00
23-KB11	6400982	Standard Duty Down Pressure Springs . . . . . (Not Recommended with Row Unit Mounted Attachments)	7	526.00
23-KB10	6400027	Without Down Pressure Springs		No Charge
◆◆Dealer Installed◆◆		**PNEUMATIC DOWN PRESSURE - Order One per Planter**		**Optional**
	6001842	Pneumatic Down Pressure (4 Row Set) . . . . . Order One per 4 Rows **Requires Compressor and Hose**		896.00
	6001466	Pneumatic Down Pressure Compressor	20	844.00
	6001370	Pneumatic Down Pressure Hose (100 Feet) . . . . . (Will Plumb Up to 12 Rows)		181.00

ORDER CODE	CATALOG NUMBER	DESCRIPTION	APPROX. WEIGHT (lb.)	LIST PRICE

➢➢Factory Installed⮜⮜ ROW UNIT MOUNTED TILLAGE - Order One per Planter — Required

Heavy Duty Down Pressure Springs or Pneumatic Down Pressure Recommended

6 Row Planters

25-VA10	6400021	Without Unit Mounted Tillage Attachment		No Charge
25-VA13	6400555	Tillage Coulter with Ripple Blade	41	1,897.00
25-VA15	6400571	Tillage Coulter with 13 Flute Blade	41	1,897.00
25-VA18	6400579	Tillage Coulter with 25 Flute Blade	41	1,897.00
25-VA16	6400871	Residue Manager - Finger Wheel 13-inch Steel Wheel with 16 Fingers (For Use without Tillage Coulters)	37	2,304.00
25-VA19	6400872	Residue Manager - SharkTooth® Wheel 13-inch Steel Wheel with 12 Teeth (For Use without Tillage Coulters)		2,488.00
25-VA20	6400873	Floating Residue Manager - SharkTooth® Wheel with Depth Band, 13-inch Steel Wheel with 12 Teeth (For Use without Tillage Coulters)		3,373.00
25-VA11	6400539	Tillage Coulter without Blade (Order Coulter Blades from 9000 Series Dealer Installed Section)		1,636.00

8 Row Planters

25-VA10	6400021	Without Unit Mounted Tillage Attachment		No Charge
25-VA13	6400556	Tillage Coulter with Ripple Blade	41	2,530.00
25-VA15	6400572	Tillage Coulter with 13 Flute Blade	41	2,530.00
25-VA18	6400580	Tillage Coulter with 25 Flute Blade	41	2,530.00
25-VA16	6400984	Residue Manager - Finger Wheel 13-inch Steel Wheel with 16 Fingers (For Use without Tillage Coulters)	37	3,072.00
25-VA19	6400985	Residue Manager - SharkTooth® Wheel 13-inch Steel Wheel with 12 Teeth (For Use without Tillage Coulters)		3,319.00
25-VA20	6400986	Floating Residue Manager - SharkTooth® Wheel with Depth Band, 13-inch Steel Wheel with 12 Teeth (For Use without Tillage Coulters)		4,498.00
25-VA11	6400540	Tillage Coulter without Blade (Order Coulter Blades from 9000 Series Dealer Installed Section)		2,182.00

ORDER CODE	CATALOG NUMBER	DESCRIPTION	APPROX. WEIGHT (lb.)	LIST PRICE

➢➢Factory Installed⮜⮜ COMBINATION RESIDUE MANAGER - Order 1 per Planter — Optional

Requires Factory Installed Row Unit Mounted Tillage Coulter (VA13, VA15, VA18 or VA11)
Recommend Heavy Duty Down Pressure Springs or Pneumatic Down Pressure

6 Row Planters

26-K102	6400595	Residue Manager Attachment . . . . . 10-inch Steel Wheel with 16 Fingers and Bearing Shields	42	2,304.00
26-K103	6400603	Residue Manager Attachment . . . . . 13-inch Steel Wheel with 16 Fingers and Bearing Shields	42	2,304.00
26-K104	6400611	Residue Manager Attachment . . . . . 13-inch Steel SharkTooth® Wheel with 12 Teeth		2,470.00

8 Row Planters

26-K102	6400596	Residue Manager Attachment . . . . . 10-inch Steel Wheel with 16 Fingers and Bearing Shields	42	3,072.00
26-K103	6400604	Residue Manager Attachment . . . . . 13-inch Steel Wheel with 16 Fingers and Bearing Shields	42	3,072.00
26-K104	6400612	Residue Manager Attachment . . . . . 13-inch Steel SharkTooth® Wheel with 12 Teeth		3,047.00

◆◆Dealer Installed◆◆ GRANULAR INSECTICIDE ATTACHMENT — Optional

Granular Insecticide Attachment - Order One Per Two Rows

NOTE: Not for use with Flex Shaft Seed Meter Drive or Row Unit Lock-up Option

	6001843	Granular Insecticide Kit with Brackets . . . . . For use with 2 Bushel Hoppers Only (Not for use with 3 Bushel Hoppers)		1,236.00

◆◆Dealer Installed◆◆ GRANULAR FERTILIZER ATTACHMENT — Optional

Granular Fertilizer Attachment (Without Openers)

How to Order Granular Fertilizer Attachment:
1. Order Granular Fertilizer Attachment
2. Order Fertilizer Openers, if desired. See page 11
3. Order Bar Extension Brackets, if necessary

Granular Fertilizer Attachment (Includes Fertilizer Drive) - Order One Per Planter

	6001272	Granular Fertilizer Attachment for 6 Row Planter . . . . . (Includes 3 Hoppers, 500 lbs each)	369	2,983.00
	6001266	Granular Fertilizer Attachment for 8 Row Planter . . . . . (Includes 4 Hoppers, 500 lbs each)	481	3,673.00

ORDER CODE	CATALOG NUMBER	DESCRIPTION	APPROX. WEIGHT (lb.)	LIST PRICE

◆◆Dealer Installed◆◆ LIQUID FERTILIZER ATTACHMENT — Optional

Liquid Fertilizer Attachment (Without Openers)

How To Order Liquid Fertilizer Attachment:

1. Order Tank Package
2. Order Pump and Drive Parts
3. Order Plumbing Kit
4. For Piston Pump Only, Order Flow Divider or Outlet Manifold
5. Order Opener Hose
6. Order Fertilizer Openers, if desired. See page 11
7. Order Bar Extension Brackets, if necessary

Liquid Fertilizer Tanks and Mounting Brackets - Order One per Planter

6001182	(2) 150 Gallon Tanks and Float Valves for 6 Row and 8 Row Planters	413	2,410.00

Fertilizer Pumps and Drives - Order One per Planter

6000452	Squeeze Pump and Drive for 6 Row Planter	84	1,791.00
6000453	Squeeze Pump and Drive for 8 Row Planter	129	2,050.00
6001221	Single Piston Pump and Contact Wheel Drive		2,983.00

Pump Plumbing Kit - Order One per Planter

Includes Hoses, Fittings, and Quick Fill Coupler
and an Additional Quick Fill Coupler for 8 Row

6001274	Squeeze Pump Plumbing for 6 Row Planter	30	436.00
6001268	Squeeze Pump Plumbing for 8 Row Planter	35	702.00
6001276	Single Piston Pump Plumbing for 6 Row Planter	35	719.00
6001270	Single Piston Pump Plumbing for 8 Row Planter	40	1,014.00

Flow Divider or Outlet Manifold Completing Package - Order One per Planter

Required for Piston Pump Only

6100199	12 Row Flow Divider for 6 Row and 8 Row Planters		1,958.00
6100194	Outlet Manifold (with Orifices and Check Valves) for 6 Row and 8 Row Planters		743.00

Liquid Fertilizer Opener Hose - Order One Roll for 6 Row Planters and Two Rolls for 8 Row Planters

6100200	Roll of Fertilizer Opener Hose, 3/8 inch x 48 Feet		92.00

ORDER CODE	CATALOG NUMBER	DESCRIPTION	APPROX. WEIGHT (lb.)	LIST PRICE
◆◆Dealer Installed◆◆		**FERTILIZER OPENERS**		**Optional**
Fertilizer Openers for Granular Fertilizer - Order One Per Two Row Units				
	6000526	Single Disc Fertilizer Opener - Dry Side Knife		1,308.00
	6000535	Single Disc Fertilizer Opener (25 Wave) Dry Trailing Knife with Multi Wave Blade		1,293.00
	6000356	Single Disc Fertilizer Opener (50 Wave) Dry Trailing Knife with Ripple Blade (Includes One Right and One Left Hand Coulter)	186	1,319.00
Fertilizer Openers for Liquid Fertilizer - Order One Per Two Row Units				
	6000525	Single Disc Fertilizer Opener - Liquid Injector (Requires Orifice Tip or Nozzle to Complete - Source Locally)		1,293.00
	6000527	Single Disc Fertilizer Opener - Liquid Side Knife		1,293.00
	6000534	Single Disc Fertilizer Opener (25 Wave) Liquid Trailing Knife with Multi Wave Blade		1,293.00
	6000355	Single Disc Fertilizer Opener (50 Wave) Liquid Trailing Knife with Ripple Blade (Includes One Right and One Left Hand Coulter)	176	1,319.00
Fertilizer Openers for Granular or Liquid - Order One Per Two Row Units				
	6100459	Double Disc Opener - 13-1/2 inch Diameter	75	803.00
Fertilizer Opener Brackets - Order One per Planter				
	6001150	Bracket Set for Single Disc Fertilizer Openers	28	122.00

Bracket Chart for Single Disc Fertilizer Openers (Double Disc Openers do not Require Brackets)

MODEL	Without Tillage Attachments	Row Unit Mounted			Frame Mounted	
		Residue Mgr or Trash Master	Tillage Coulters Only	Tillage Coulters & Residue Mgr Combination	Tillage Coulters Only	Tillage Coulters & Residue Mgr Combination
9100 Rigid Frame	6001150	6001150	6001150	6001150	6001150	6001150

RESERVED

9180 Forward Fold Planters

9180 Forward Fold Planters

F.O.B. Hesston, Kansas

STANDARD EQUIPMENT

- 7" x 7" Forward Folding Frame with Flex in the Center, with Hydraulic Cylinders and Hoses
- Hydraulic Lift with all Cylinders, Hoses and Transport Lock-Up
- Fertilizer Bar, 3 x 3 Tube
- Planter Units with: Air Metering, Chain Drive Seed Meter, 16" Double Disc Openers, 4.5"x 16" Walking Beam Gauge Wheels
- Seed Drain Kit
- Direct Drive Quick Couplers
- Central Blower, Manifold, Flow Control Valve and Air Pressure Gauge
- Transport Wheels with 9.5L-15, 12 Ply Tires
- Drive Wheels with 9.5L-15, 12 Ply Tires
- Category II-III Hitchbar
- Highway Transport Lighting
- Ground Drive - Two Transmissions

	# Rows	Spacing	Transport Width	Transport Wheels	Drive Wheels
Forward Folding Frames					
WP9182	12	30"	180"	2	2
WP9186	16	30"	180"	4	4

Ordering Instructions:
Planters are now available with many items Factory Installed.
Factory Installed items are not eligible for return to the factory.

1. Select One Order Code from Base, and One Order Code from Each Group as Required.
2. Order Required Seed Discs from 9000 Series Dealer Installed Section.
3. Additional Dealer Installed Items can be Ordered for these Models (such as Fertilizer Attachments) from this Chapter and from 9000 Series Dealer Installed Section.
4. Accepts Row Unit or Frame Mounted Tillage Attachments.

NOTE: Direct Drive requires 3 remote valves.

ORDER CODE	CATALOG NUMBER	DESCRIPTION	APPROX. WEIGHT (lb.)	LIST PRICE
FORWARD FOLD PLANTERS				
WP9182	9182901	12 Row 30-inch Planter	9290	50,185.00
WP9186	9186903	16 Row 30-inch Planter	13368	69,673.00

ORDER CODE	CATALOG NUMBER	DESCRIPTION	APPROX. WEIGHT (lb.)	LIST PRICE
MARKERS - Order One Set per Planter				**Required**
12 Row Planters				
2-P212	6400034	Flat Folding Break-Away Markers with Notched Marker Discs	931	6,500.00
2-P211	6400033	Folding Markers - Factory Installed		2,525.00
	6100094	Notched Marker Disc - Dealer Installed	41	458.00
2-P210	6400032	Without Markers		No Charge
	6000362	Without Marker Disc		No Charge
16 Row Planters				
2-P212	6400229	Flat Folding Break-Away Markers with Gauge Wheel and Notched Marker Discs	1395	8,095.00
2-P211	6400036	Folding Markers - Factory Installed	325	5,000.00
	6100094	Notched Marker Disc - Dealer Installed	41	458.00
2-P210	6400035	Without Markers		No Charge
	6000362	Without Marker Disc		No Charge

Notes on Ordering Markers:

1. 12 Row Planters Can Not be Equipped with Both Flat Fold Markers and Dry Fertilizer Because of Marker Stand and Hopper Interference.

➢➢Factory Installed⮜⮜		**SEED HOPPERS AND METERS - Order One per Planter**		**Required**
12 Row Planters				
5-HO12	6400886	Set of 12 Two-Bushel Hoppers and Meters	30	9,510.00
5-HO13	6400887	Set of 12 Three-Bushel Hoppers and Meters	35	11,152.00
5-HO10	6400903	Without Hoppers and Meters.		No Charge
16 Row Planters				
5-HO12	6400799	Set of 16 Two-Bushel Hoppers and Meters	30	12,680.00
5-HO13	6400800	Set of 16 Three-Bushel Hoppers and Meters	35	14,869.00
5-HO10	6400802	Without Hoppers and Meters.		No Charge

◆◆Dealer Installed◆◆		**HYDRAULIC SUPPLY SYSTEM - Order One per Planter**		**Optional**
	6001047	540 RPM PTO Pump	37	1,524.00
	6001048	1000 RPM PTO Pump with 1-3/8 inch Spline Shaft	34	1,678.00
	6001049	1000 RPM PTO Pump with 1-3/4 inch Spline Shaft		1,678.00

➢➢Factory Installed⮜⮜		**SEED TUBES AND SENSORS - Order One per Planter**		**Required**
12 Row Planters				
16-P301	6400884	Seed Tubes with High Rate Sensors.		2,202.00
16-P303	6400885	Seed Tubes with Seed Smart Sensors.		3,615.00
16 Row Planters				
16-P301	6400814	Seed Tubes with High Rate Sensors.		2,937.00
16-P303	6400815	Seed Tubes with Seed Smart Sensors.		4,820.00

ORDER CODE	CATALOG NUMBER	DESCRIPTION	APPROX. WEIGHT (lb.)	LIST PRICE
➢➢Factory Installed⮜⮜		**CLOSING SYSTEM - Order One per Planter**		**Required**

NOTE: Angled Closing Wheels are factory installed in the staggered position with the left wheel forward and with two spacers under the wheels.

12 Row Planters

12-LR11	6400890	Angled Bracket with Rubber Closing Wheels	19	3,451.00
12-LR12	6400891	Angled Bracket with Cast Closing Wheels	54	3,972.00
12-LR14	6400423	Single “V” Trench Press Wheel	21	3,278.00
12-LR13	6400892	Angled Bracket without Closing Wheels (Order Closing Wheels from 9000 Series Dealer Installed Section)		1,948.00
12-LR10	6400803	Without Closing Wheels		No Charge

16 Row Planters

12-LR11	6400804	Angled Bracket with Rubber Closing Wheels	19	4,600.00
12-LR12	6400807	Angled Bracket with Cast Closing Wheels	54	5,296.00
12-LR14	6401001	Single “V” Trench Press Wheel	21	4,370.00
12-LR13	6400806	Angled Bracket without Closing Wheel. (Order Closing Wheels from 9000 Series Dealer Installed Section)		2,597.00
12-LR10	6400803	Without Closing Wheels		No Charge

◆◆Dealer Installed◆◆ MONITOR SYSTEM - Order One per Planter **Required**

If Tractor is Equipped with ISO Terminal / Monitor,
Order 6000100 and 6001214 Monitor Bridge Package from 9000 Series Dealer Installed Section.

	6000807	SM400SE Seed Population Monitor (12 and 16 Rows)	25	2,324.00
	6000100	Without Monitor		No Charge

◆◆Dealer Installed◆◆ GROUND SPEED SENSOR - Order One per Planter **Required**

	6000955	Magnetic Ground Speed Sensor	4	194.00
	6000923	Radar Ground Speed and Distance Sensing Gun	15	1,049.00
	6100064	Radar "Y" Harness (4 pin round tractor connector to 4 pin round monitor connector)		152.00
	6000810	Without Ground Speed and Distance Sensing (For Use with 6000100)		No Charge

Note: Part # 72515753 - Radar "Y" Harness
(4 pin flat tractor connector to a 4 pin round monitor connector)
(Above two "Y" Harnesses for tractors equipped with Radar Speed Sensing)

ORDER CODE	CATALOG NUMBER	DESCRIPTION	APPROX. WEIGHT (lb.)	LIST PRICE

➢➢Factory Installed➢➢ TRANSPORT WHEELS - Order One per Planter — Required with 12 Row

12 Row Planters Only

39-P501	6400011	Two Transport Wheels (Standard)		No Charge
39-P502	6400012	Four Transport Wheels (Two Standard Plus Additional Set of Two Transport Wheels)	1536	8,250.00

NOTE: Four Transport Wheels (29-P502 Factory Installed or 6001146 Dealer Installed) are Required When Optional Fertilizer Systems are Installed.

◆◆Dealer Installed◆◆ ADDITIONAL WHEELS - Order One per Planter — Optional

12 Row Planters Only

	6001146	Additional Set of Two Transport Wheels for 12-Row **NOTE:** Additional Set of Transport Wheels are required when Optional Fertilizer Tanks or Fertilizer Hoppers are Installed.	1536	7,107.00
	6001164	Additional Set of Drive Wheels for 12-Row **NOTE:** Additional Drive Wheels for 12-Row are required when Optional Fertilizer Tanks or Fertilizer Hoppers are Installed, and may be required for additional Drive and Carrying Support when operating in soft conditions.	569	2,930.00

➢➢Factory Installed➢➢ ADDITIONAL EQUIPMENT - Order One per Planter — Optional

33-BZ01	6400755	Blower Inlet Screen		99.00
34-A903	6400769	Transmission Shield		25.00
7-PS01	6400902	Row Unit Gauge Wheel Scrapers (12 Row)		420.00
7-PS01	6400816	Row Unit Gauge Wheel Scrapers (16 Row)		560.00
	71428520W	Ship Safe Preservative Coating (Recommended for Protection When Shipped in Winter Months)		586.00

ORDER CODE	CATALOG NUMBER	DESCRIPTION	APPROX. WEIGHT (lb.)	LIST PRICE
➢➢**Factory Installed**⮜⮜		**DOWN PRESSURE SYSTEM - Order One per Planter**		**Required**
12 Row Planters				
23-KB12	6400895	Heavy Duty Down Pressure Springs	12	2,432.00
23-KB11	6400894	Standard Duty Down Pressure Springs . . . . . (Not Recommended with Row Unit Mounted Attachments)	7	789.00
23-KB10	6400027	Without Down Pressure Springs		No Charge
16 Row Planters				
23-KB12	6400811	Heavy Duty Down Pressure Springs	12	3,242.00
23-KB11	6400812	Standard Duty Down Pressure Springs . . . . . (Not Recommended with Row Unit Mounted Attachments)	7	1,053.00
23-KB10	6400027	Without Down Pressure Springs		No Charge

➢➢**Factory Installed**⮜⮜		**ROW UNIT MOUNTED TILLAGE - Order One per Planter** **Heavy Duty Down Pressure Springs Recommended**		**Required**
12 Row Planters				
25-VA10	6400021	Without Unit Mounted Tillage Attachment		No Charge
25-VA16	6400896	Residue Manager - Finger Wheel . . . . . 13-inch Steel Wheel with 16 Fingers (For Use without Tillage Coulters)	37	4,608.00
25-VA19	6400897	Residue Manager - SharkTooth® Wheel . . . . . 13-inch Steel Wheel with 12 Teeth (For Use without Tillage Coulters)		4,978.00
25-VA20	6400898	Floating Residue Manager - SharkTooth® Wheel . . . . . with Depth Band, 13-inch Steel Wheel with 12 Teeth (For Use without Tillage Coulters)		6,748.00
25-VA11	6400541	Tillage Coulter without Blade. . . . . (Order Coulter Blades from 9000 Series Dealer Installed Section)		3,272.00
16 Row Planters				
25-VA10	6400021	Without Unit Mounted Tillage Attachment		No Charge
25-VA16	6400424	Residue Manager - Finger Wheel . . . . . 13-inch Steel Wheel with 16 Fingers (For Use without Tillage Coulters)	37	6,145.00
25-VA19	6400439	Residue Manager - SharkTooth® Wheel . . . . . 13-inch Steel Wheel with 12 Teeth (For Use without Tillage Coulters)		6,637.00
25-VA20	6400809	Floating Residue Manager - SharkTooth® Wheel . . . . . with Depth Band, 13-inch Steel Wheel with 12 Teeth (For Use without Tillage Coulters)		8,996.00
25-VA11	6400542	Tillage Coulter without Blade. . . . . (Order Coulter Blades from 9000 Series Dealer Installed Section)		4,362.00

ORDER CODE	CATALOG NUMBER	DESCRIPTION	APPROX. WEIGHT (lb.)	LIST PRICE
◆◆Dealer Installed◆◆		**ROW UNIT MOUNTED TILLAGE - Order One Per Row** **Heavy Duty Down Pressure Springs Recommended**		**Optional**
	6001691	Tillage Coulter with Bubble Blade	41	316.00
	6001692	Tillage Coulter with Ripple Blade	41	316.00
	6001693	Tillage Coulter with 8 Flute Blade	39	316.00
	6001694	Tillage Coulter with 7/8 inch - 13 Flute Blade	37	316.00
	6001695	Tillage Coulter with 25 Flute Blade		316.00
	6001658	Trash Masters - 12-inch Solid Blades	34	378.00
◆◆Dealer Installed◆◆		**RESIDUE MANAGERS - Order One Per Row** **Heavy Duty Down Pressure Springs Recommended**		**Optional**
	6001250	Residue Manager Attachment, 13-inch Steel Wheel with 16 Fingers and Bearing Shields (for use with Tillage Coulters above)	42	381.00
	6001249	Residue Manager Attachment, 10-inch Steel Wheel with 16 Fingers and Bearing Shields (for use with Tillage Coulters above)	42	384.00
	6001245	Residue Manager - SharkTooth® Wheel Attachment 13-inch Steel Wheel with 12 Teeth (for use with Tillage Coulters above)		412.00

ORDER CODE	CATALOG NUMBER	DESCRIPTION	APPROX. WEIGHT (lb.)	LIST PRICE

◆◆Dealer Installed◆◆ GRANULAR INSECTICIDE ATTACHMENT — Optional

Granular Insecticide Attachment - Order One Per Two Rows, unless otherwise noted

NOTE: Not for use with Flex Shaft Seed Meter Drive or Row Unit Lock-up Option

6001843	Granular Insecticide Kit with Brackets . . . . . . For use with 2 Bushel Hoppers Only (Not for use with 3 Bushel Hoppers)		1,236.00
6001845	Extension Harness and Light Bracket Kit . . . . . . Required for Models 9182 and 9186 Only **(Order One Per Planter)**		81.00

◆◆Dealer Installed◆◆ GRANULAR FERTILIZER - Order One per Planter — Optional

Granular Fertilizer Attachment (Without Openers)

How to Order Granular Fertilizer Attachment:

1. Order Granular Fertilizer Attachment
2. Order Fertilizer Openers and Brackets, if desired.
3. For 12 Row Only, Order Additional Transport Wheels Factory Installed # 29-P502 or Dealer Installed # 6001146
4. For 12 Row Only, Order Additional Drive Wheels # 6001164

Granular Fertilizer Attachment (Includes Fertilizer Drive) - Order One Per Planter

6001280	12 Row Granular Fertilizer Attachment . . . . . . (Includes 2 Fertilizer Drives and 6 Hoppers, 500 lbs ea)	803	5,738.00
6001281	16 Row Granular Fertilizer Attachment . . . . . . (Includes 2 Fertilizer Drives and 8 Hoppers, 500 lbs ea)	995	9,754.00

Note:

12 Row Planters Can Not be Equipped with Both Flat Fold Markers and Dry Fertilizer Because of Marker Stand and Hopper Interference.

ORDER CODE	CATALOG NUMBER	DESCRIPTION	APPROX. WEIGHT (lb.)	LIST PRICE

➢➢Factory and Dealer Installed◆◆ LIQUID FERTILIZER - Order One per Planter Optional

AVAILABLE FOR 16 ROW PLANTER ONLY

Factory Installed Items Are Not Eligible for Return to the Factory

Liquid Fertilizer Attachment (Without Openers)

How To Order Factory Installed Liquid Fertilizer Attachment:

(Flow Divider, Outlet Manifold, and Opener Hose are Dealer Installed)

1. Order Tank Package (Factory Installed) (Includes Float Valves, Supports, Top Tank Straps & Hardware)
2. For Piston Pump Only (UN23), Order Flow Divider or Outlet Manifold (Dealer Installed)
3. Order Opener Hose (Dealer Installed)
4. Order Fertilizer Openers and Bracket if desired (Dealer Installed) See page 23

➢➢Factory Installed⮜⮜ Liquid Fertilizer Tanks and Mounting Brackets - Order One per Planter

35-UN10	6400930	Without Liquid Fertilizer Tank Package		No Charge
35-UN02	6400082	(4) 150 Gallon Fertilizer Tanks	825	5,370.00
35-UN22	6400082	(4) 150 Gallon Fertilizer Tanks	825	5,370.00
	6400136	(2) Low Pressure Squeeze Pump and Contact Drives	325	4,751.00
	6400085	Plumbing Kit for Low Pressure Squeeze Pumps		1,700.00
35-UN23	6400082	(4) 150 Gallon Fertilizer Tanks	825	5,370.00
	6400084	Piston Pump and Fertilizer Contact Drive	125	2,983.00
	6400086	Plumbing Kit for Piston Pumps		1,550.00

◆◆Dealer Installed◆◆ Flow Divider or Outlet Manifold Completing Package - Order One per Planter

Required for Piston Pump Only

6000647	16 Row Flow Divider		2,865.00
6100219	16 Row Outlet Manifold (with Orifices and Check Valves)		1,484.00

◆◆Dealer Installed◆◆ Liquid Fertilizer Opener Hose - See Below for Order Quantity

6100200	Roll of Fertilizer Opener Hose, 3/8 inch x 48 Feet (4) Rolls Required for 16 Row Squeeze Pump (6) Rolls Required for 16 Row Piston Pump		92.00

ORDER CODE	CATALOG NUMBER	DESCRIPTION	APPROX. WEIGHT (lb.)	LIST PRICE

◆◆Dealer Installed◆◆ LIQUID FERTILIZER - Order One per Planter — Optional

AVAILABLE FOR 12 and 16 ROW PLANTER

Liquid Fertilizer Attachment (Without Openers)

How To Order Dealer Installed Liquid Fertilizer Attachment:

1. Order Tank Package
2. Order Pump and Drive Parts
3. Order Plumbing Kit
4. For Piston Pump Only, Order Flow Divider or Outlet Manifold
5. Order Opener Hose
6. Order Fertilizer Openers and Bracket if desired (Dealer Installed) See page 23

FOR 12 ROW ONLY

7. Order Additional Transport Wheels Factory Installed # 29-P502 or Dealer Installed # 6001146
8. Order Additional Drive Wheels # 6001164

Liquid Fertilizer Tanks and Mounting Brackets - Order One per Planter

6001185	(4) 150 Gallon Tanks. . . . . (Includes Float Valves, Supports, Top Tank Straps and Hardware)	825	5,370.00

Fertilizer Pumps and Drives - Order One per Planter

6001279	(2) Low Pressure Squeeze Pump and Contact Drives	300	3,679.00
6001221	Single Piston Pump and Contact Wheel Drive	125	2,983.00

Pump Plumbing Kit - Order One per Planter

6001275	Plumbing Kit for Low Pressure Squeeze Pumps	1,104.00
6001277	Plumbing Kit for Piston Pumps.	1,104.00

Plumbing Kits Include: Hoses, Fittings, and Quick Fill Coupler

Flow Divider or Outlet Manifold Completing Package - Order One per Planter

Required for Piston Pump Only

6100199	12 Row Flow Divider	1,958.00
6000647	16 Row Flow Divider	2,865.00
6100195	12 Row Outlet Manifold (with Orifices and Check Valves). . . .	872.00
6100219	16 Row Outlet Manifold (with Orifices and Check Valves). . . .	1,484.00

Liquid Fertilizer Opener Hose - See Below for Order Quantity

6100200	Roll of Fertilizer Opener Hose, 3/8 inch x 48 Feet . . . . . (3) Rolls Required for 12 Row Squeeze Pump (4) Rolls Required for 12 Row Piston Pump (4) Rolls Required for 16 Row Squeeze Pump (6) Rolls Required for 16 Row Piston Pump	92.00

ORDER CODE	CATALOG NUMBER	DESCRIPTION	APPROX. WEIGHT (lb.)	LIST PRICE
◆◆Dealer Installed◆◆		**FERTILIZER OPENERS**		**Optional**
		Fertilizer Openers for Granular Fertilizer - Order One Per Two Row Units		
	6000526	Single Disc Fertilizer Opener - Dry Side Knife		1,308.00
	6000535	Single Disc Fertilizer Opener (25 Wave) Dry Trailing Knife with Multi Wave Blade		1,293.00
	6000356	Single Disc Fertilizer Opener (50 Wave) Dry Trailing Knife with Ripple Blade (Includes One Right and One Left Hand Coulter)	186	1,319.00
		Fertilizer Openers for Liquid Fertilizer - Order One Per Two Row Units		
	6000525	Single Disc Fertilizer Opener - Liquid Injector (Requires Orifice Tip or Nozzle to Complete - Source Locally)		1,293.00
	6000527	Single Disc Fertilizer Opener - Liquid Side Knife		1,293.00
	6000534	Single Disc Fertilizer Opener (25 Wave) Liquid Trailing Knife with Multi Wave Blade		1,293.00
	6000355	Single Disc Fertilizer Opener (50 Wave) Liquid Trailing Knife with Ripple Blade (Includes One Right and One Left Hand Coulter)	176	1,319.00
		Fertilizer Openers for Granular or Liquid - Order One Per Two Row Units		
	6100459	Double Disc Opener - 13-1/2 inch Diameter	75	803.00
		Fertilizer Opener Brackets - Order One per Planter		
	6000609	Offset Shank Set for Single Disc Fertilizer Openers (Order One per Four(4) Rows)	101	240.00

Bracket Chart for Single Disc Fertilizer Openers (Double Disc Openers do not Require Brackets)

MODEL	Without Tillage Attachments	Row Unit Mounted			Frame Mounted	
		Residue Mgr or Trash Master	Tillage Coulters Only	Tillage Coulters & Residue Mgr Combination	Tillage Coulters Only	Tillage Coulters & Residue Mgr Combination
9180 (Dry Knife Requires Part # N852889, Adapter Tube)	6000609	6000609	6000609	6000609 (Only #6000526 & 6000527 Side Knife Can Be Used)	Can Not Be Used	

RESERVED

9200 Wing Fold Planters

9200 Wing Fold Planters

F.O.B. Hesston, Kansas

STANDARD EQUIPMENT

- 7" x 7" Rigid Frame or 7" x 7" Flex Frame
- Hydraulic Wing Fold Package
- Hydraulic Lift with all Cylinders, Hoses and Transport Lock-Up
- Planter Units with: Air Metering, Chain Drive Seed Meter, 16" Double Disc Openers, 4.5"x 16" Walking Beam Gauge Wheels
- ISO Seed Monitoring
- Direct Drive Quick Couplers
- Highway Transport Lighting
- Highway Transport Chain
- Transport Wheels with 9.5L-15, 12 Ply Tires
- Seed Drain Kit

Ground Drive Planters 9202, 9222

- Central Blower, Manifold, Flow Control Valve and Air Pressure Gauge
- Contact Tire Seed Drive Transmissions
  One transmission for Model 9202
  Two transmissions for Model 9222

Hydraulic Drive Planter (Optional for 9222)

- Central Blower, Manifold, Couplers for Direct Drive, Flow Control Valve and Air Pressure Gauge
  (Uses Tractor Hyd.- Requires min. 8 GPM @ 2000psi
  Consult Tractor Manufacturer to Verify Hydraulic Sys.)
- Micro Processor Controlled Variable Rate Hydraulic Drive

# Rows	Spacing	Center Frame	Wings	Transport Width	Transport Wheels	Total Wheels
Rigid & Flex Frames						
12	30"	188"	80"	196"	4	6

Ordering Instructions:
Planters are now available with many items Factory Installed.
Factory Installed items are not eligible for return to the factory.

1. Select One Order Code from Base, and One Order Code from Each Group as Required.
2. Order Required Seed Discs from 9000 Series Dealer Installed Section.
3. Additional Dealer Installed Items can be Ordered for these Models (such as Fertilizer Attachments) from this Chapter and from 9000 Series Dealer Installed Section.
4. Accepts Row Unit Mounted Tillage Attachments Only.

NOTE: Direct Drive requires 3 remote valves.

ORDER CODE	CATALOG NUMBER	DESCRIPTION	APPROX. WEIGHT (lb.)	LIST PRICE
WING FOLD PLANTERS				
WP9202	9202901	12 Row 30-inch Planter, Rigid Frame	7290	37,519.00
WP9222	9222901	12 Row 30-inch Planter, Flex Frame	8040	41,558.00

ORDER CODE	CATALOG NUMBER	DESCRIPTION	APPROX. WEIGHT (lb.)	LIST PRICE
➢➢Factory Installed⮜⮜		**MARKERS - Order One Set per Planter**		**Required**
2-P211	6400182	Folding Break-Away Markers for 9202 with Notched Marker Discs		5,721.00
2-P211	6400181	Folding Break-Away Markers for 9222 with Notched Marker Discs		5,721.00
2-P210	6400192	Without Markers		No Charge
➢➢Factory Installed⮜⮜		**SEED HOPPERS AND METERS - Order One per Planter**		**Required**
5-HO12	6400886	Set of 12 Two-Bushel Hoppers and Meters	30	9,510.00
5-HO13	6400887	Set of 12 Three-Bushel Hoppers and Meters	35	11,152.00
5-HO10	6400903	Without Hoppers and Meters		No Charge
➢➢Factory Installed⮜⮜		**SEED METER DRIVE - Order One per Planter**		**Required**
3-D702	6400855	Flex Shaft Drive (with Electric Clutch for Each Row). (To Add Auto Row Shut-Off Feature, Order 6001396 C3000 Terminal / Monitor and 10 Hz or Stronger GPS Receiver)		6,900.00
3-D701	6400854	Chain Drive		No Charge

Notes on Ordering Flex Shaft
- Requires: 6001400 Communication Module below.
- Flex Shaft is Not Compatible with Section Control Half-Width Shut-Off or Standard Duty Down Pressure Springs

◆◆Dealer Installed◆◆		**Communication Module Required to Operate Flex Shaft Above**		**Optional**
	6001400	Communication Module with 6 Programmable Toggle Switches for use with Flex Shaft Seed Meter Drive. Six Toggle Switches Provide Manual Control for Six Sections		509.00

NOTE: The programmable communication module with toggle switches also provides manual back-up when using the Auto Row Shut-Off feature of the C3000 Terminal / Monitor if GPS signal is lost.

➢➢Factory Installed⮜⮜		**DRIVE - Order One per Planter**		**Required**
WP9202				
20-DO10	6400661	Ground Drive, Single Transmission (with Oil Coolers)		No Charge
WP9222				
20-DO12	6400662	Ground Drive, Dual Transmission (with Oil Coolers)		No Charge
20-DO11	6401088	Hydraulic Drive (without Oil Coolers)		5,266.00

Notes on Ordering Hydraulic Drive
Also Requires Radar Distance Sensing or Radar "Y" Harness from page 28

◆◆Dealer Installed◆◆		**HYDRAULIC SUPPLY SYSTEM - Order One per Planter**		**Optional**
	6001047	540 RPM PTO Pump	37	1,524.00
	6001048	1000 RPM PTO Pump with 1-3/8 inch Spline Shaft	34	1,678.00
	6001049	1000 RPM PTO Pump with 1-3/4 inch Spline Shaft		1,678.00
➢➢Factory Installed⮜⮜		**SEED TUBES AND SENSORS - Order One per Planter**		**Required**
16-P301	6400884	Seed Tubes with High Rate Sensors		2,202.00
16-P303	6400885	Seed Tubes with Seed Smart Sensors		3,615.00

ORDER CODE	CATALOG NUMBER	DESCRIPTION	APPROX. WEIGHT (lb.)	LIST PRICE
➢➢Factory Installed⮜⮜		**CLOSING SYSTEM - Order One per Planter**		**Required**
NOTE: Angled Closing Wheels are factory installed in the staggered position with the left wheel forward and with two spacers under the wheels.				
12-LR11	6400890	Angled Bracket with Rubber Closing Wheels	19	3,451.00
12-LR12	6400891	Angled Bracket with Cast Closing Wheels	54	3,972.00
12-LR14	6400423	Single “V” Trench Press Wheel	21	3,278.00
12-LR13	6400892	Angled Bracket Without Closing Wheels (Order Closing Wheels from 9000 Series Dealer Installed Section)		1,948.00
12-LR10	6400803	Without Closing Wheels		No Charge
◆◆Dealer Installed◆◆		**MONITOR SYSTEM - Order One per Planter**		**Required**
Requires 6000923 Radar Ground Speed and Distance Sensing Gun or 6100064 Radar "Y" Harness. **For Use on Tractor with Radar.** **If Tractor is Equipped with ISO Terminal / Monitor, Order 6000993**				
	6001396	C3000 Terminal / Monitor		5,299.00
	6001313	C1000 Terminal / Monitor		2,803.00
	6000993	Without Monitor (Order only if Tractor is Equipped with an Existing ISO Terminal / Monitor)		No Charge
◆◆Dealer Installed◆◆		**GROUND SPEED SENSOR - Order One per Planter**		**Required**
	6000923	Radar Ground Speed and Distance Sensing Gun	15	1,049.00
	6100064	Radar "Y" Harness (4 pin round tractor connector to 4 pin round monitor connector)		152.00
	6000810	Without Ground Speed and Distance Sensing		No Charge
Note: Part # 72515753 - Radar "Y" Harness (4 pin flat tractor connector to a 4 pin round monitor connector) (Above two "Y" Harnesses for tractors equipped with Radar Speed Sensing)				
➢➢Factory Installed⮜⮜		**SECTION CONTROL SHUT-OFF - Order One per Planter** **Requires 6001305 Controller below** **For use with Chain Drive Seed Meter Only** **For use with Ground Drive Only** **Not Compatible with Auto Row Shut-Off**		**Required**
For 9202				
32-7P01	6400353	Without Section Control Half-Width Shut-Off.		No Charge
32-7P02	6400354	Section Control Half-Width Shut-Off (Includes 2 Clutches and Harness)	50	1,591.00
For 9222				
32-7P01	6400349	Without Section Control Half-Width Shut-Off, Ground Drive		No Charge
32-7P05	6401306	Without Section Control Half-Width Shut-Off, Hydraulic Drive		No Charge
32-7P02	6400350	Section Control Half-Width Shut-Off (Includes 2 Clutches and Harness)	50	1,591.00
◆◆Dealer Installed◆◆		**CONTROLLER - for Section Control Shut-Off**		**Optional**
	6001305	Section Control Shut-Off Controller (Required only with Factory Installed Section Control Shut-Off)		403.00

ORDER CODE	CATALOG NUMBER	DESCRIPTION	APPROX. WEIGHT (lb.)	LIST PRICE
➢➢Factory Installed⮜⮜		**DRIVE WHEEL MUD SCRAPERS - Order One per Planter**		**Optional**
Quantity 4 is Maximum Allowed per Planter for Factory and Dealer Installed Combined				
15-PH01	6400777	Drive Wheel Mud Scraper for the Transmission . . . . . Drive Wheel (9202) (Includes One)		184.00
15-PH01	6400778	Drive Wheel Mud Scrapers for the Transmission . . . . . Drive Wheel (9222) (Includes Two)		369.00
◆◆Dealer Installed◆◆		**DRIVE WHEEL MUD SCRAPER - Order One per Wheel**		**Optional**
	6001323	Drive Wheel Mud Scraper for the Transmission . . . . . Drive Wheel (Order One for 9202, Order Two for 9222)		184.00
See above for the Maximum Quantity of Factory and Dealer Installed Combined				
➢➢Factory Installed⮜⮜		**ADDITIONAL EQUIPMENT - Order One per Planter**		**Optional**
33-BZ01	6400755	Blower Inlet Screen		99.00
7-PS01	6400902	Row Unit Gauge Wheel Scrapers		420.00
	71428520W	Ship Safe Preservative Coating (Recommended for . . . . . Protection When Shipped in Winter Months)		586.00
➢➢Factory Installed⮜⮜		**DOWN PRESSURE SYSTEM - Order One per Planter**		**Required**
23-KB14	6400857	Pneumatic Down Pressure System . . . . . **Requires 6001466 Compressor Below**	165	2,688.00
23-KB12	6400895	Heavy Duty Down Pressure Springs	12	2,432.00
23-KB11	6400894	Standard Duty Down Pressure Springs . . . . . (Not Recommended with Row Unit Mounted Attachments) (Not Recommended with Flex Shaft Drive)	7	789.00
23-KB10	6400027	Without Down Pressure Springs		No Charge
◆◆Dealer Installed◆◆		**COMPRESSOR - Order One per Planter**		**Optional**
	6001466	Pneumatic Down Pressure Compressor . . . . . (Required with Factory Installed only Pneumatic Down Pressure)	20	844.00

ORDER CODE	CATALOG NUMBER	DESCRIPTION	APPROX. WEIGHT (lb.)	LIST PRICE
➢➢Factory Installed⮜⮜		**ROW UNIT MOUNTED TILLAGE - Order One per Planter**		**Required**
Heavy Duty Down Pressure Springs or Pneumatic Down Pressure Recommended				
25-VA10	6400021	Without Unit Mounted Tillage Attachment		No Charge
25-VA13	6400557	Tillage Coulter with Ripple Blade.	41	3,793.00
25-VA15	6400573	Tillage Coulter with 13 Flute Blade.	37	3,793.00
25-VA18	6400581	Tillage Coulter with 25 Flute Blade.		3,793.00
25-VA16	6400896	Residue Manager - Finger Wheel . . . . . 13-inch Steel Wheel with 16 Fingers (For Use without Tillage Coulters)	37	4,608.00
25-VA19	6400897	Residue Manager - SharkTooth® Wheel . . . . . 13-inch Steel Wheel with 12 Teeth (For Use without Tillage Coulters)		4,978.00
25-VA20	6400898	Floating Residue Manager - SharkTooth® Wheel . . . . . with Depth Band, 13-inch Steel Wheel with 12 Teeth (For Use without Tillage Coulters)		6,748.00
25-VA11	6400541	Tillage Coulter without Blade. . . . . (Order Coulter Blades from 9000 Series Dealer Installed Section)		3,272.00
➢➢Factory Installed⮜⮜		**COMBINATION RESIDUE MANAGER - Order 1 per Planter**		**Optional**
Requires Factory Installed Row Unit Mounted Tillage Coulter (VA13, VA15, VA18 or VA11) Recommend Heavy Duty Down Pressure Springs or Pneumatic Down Pressure				
26-K102	6400597	Residue Manager Attachment . . . . . 10-inch Steel Wheel with 16 Fingers and Bearing Shields	42	4,608.00
26-K103	6400605	Residue Manager Attachment . . . . . 13-inch Steel Wheel with 16 Fingers and Bearing Shields	42	4,608.00
26-K104	6400613	Residue Manager Attachment . . . . . 13-inch Steel SharkTooth® Wheel with 12 Teeth		4,570.00
26-K101	6400589	Residue Manager without Spoke Wheels . . . . . (Order Conversion Wheels from 9000 Series Dealer Installed Section)		1,145.00
◆◆Dealer Installed◆◆		**GRANULAR INSECTICIDE ATTACHMENT**		**Optional**
<u>Granular Insecticide Attachment</u> - Order One Per Two Rows				
NOTE: Not for use with Flex Shaft Seed Meter Drive or Row Unit Lock-up Option				
	6001843	Granular Insecticide Kit with Brackets . . . . . For use with 2 Bushel Hoppers Only (Not for use with 3 Bushel Hoppers)		1,236.00

ORDER CODE	CATALOG NUMBER	DESCRIPTION	APPROX. WEIGHT (lb.)	LIST PRICE

➢➢Factory and Dealer Installed◆◆ LIQUID FERTILIZER - Order One per Planter Optional

Factory Installed Items Are Not Eligible for Return to the Factory

Liquid Fertilizer Attachment (Without Openers)

How To Order Factory Installed Liquid Fertilizer Attachment:

(Flow Divider, Outlet Manifold and Opener Hose are Dealer Installed)

1. Order Tank Package (Factory Installed)
2. Order Flow Divider or Outlet Manifold (Dealer Installed)
3. Order Fertilizer Openers as desired. (Factory Installed)
4. Order Opener Hose (Dealer Installed)

➢➢Factory Installed⮜⮜ Liquid Fertilizer Tanks and Mounting Brackets - Order One per Planter

For 9202 or 9222 - Tank Only Package

35-UN10	6400348	Without Liquid Fertilizer Tank Package		No Charge
35-UN02	6400355	(2) 200 Gallon Tanks. (Includes Float Valves, Supports, Top Tank Straps and Hardware)	433	2,754.00

For 9202 - Tank and Plumbing Kit Package

35-UN21	6400355	(2) 200 Gallon Tanks. (Includes Float Valves, Supports, Top Tank Straps and Hardware)	433	2,754.00
	6400347	Single Piston Pump and Contact Wheel Drive and Lock-up	125	2,983.00
	6400357	Plumbing Kit for Piston Pump		1,086.00

For 9222 - Tank and Plumbing Kit Package

35-UN21	6400355	(2) 200 Gallon Tanks. (Includes Float Valves, Supports, Top Tank Straps and Hardware)	433	2,754.00
	6400347	Single Piston Pump and Contact Wheel Drive and Lock-up	125	2,983.00
	6400356	Plumbing Kit for Piston Pump		1,086.00

◆◆Dealer Installed◆◆ Liquid Fertilizer Plumbing

Flow Divider or Outlet Manifold Completing Package - Order One per Planter

Required for Piston Pump Only

	6100199	12 Row Flow Divider	1,958.00
	6100195	12 Row Outlet Manifold (with Orifices and Check Valves)	872.00

➢➢Factory Installed⮜⮜ Fertilizer Openers for Liquid Fertilizer - Order One per Planter

(Includes Mtg Brackets for Double Disc Openers and Mounting Brackets and Offset Shanks for Single Disc Openers)

19-K201	6400771	Double Disc Fertilizer Openers	6,766.00
19-K202	6400774	Liquid Side Knife Openers	9,847.00
19-K203	6400747	Liquid Injector Fertilizer Openers	9,847.00
19-K204	6400748	Liquid Trailing Knife Openers with Ripple Blade	9,847.00
19-K205	6400749	Liquid Trailing Knife Openers with 25 Flute Blade	9,847.00

Note: Single Disc Fertilizer Openers can not be used with Tillage/Coulter Residue Manager Combination

Liquid Fertilizer Opener Hose - Order Four Rolls

	6100200	Roll of Fertilizer Opener Hose, 3/8 inch x 48 Ft	92.00

ORDER CODE	CATALOG NUMBER	DESCRIPTION	APPROX. WEIGHT (lb.)	LIST PRICE

◆◆Dealer Installed◆◆LIQUID FERTILIZER - Order One per Planter — Optional

Liquid Fertilizer Attachment (Without Openers)

How To Order Dealer Installed Liquid Fertilizer Attachment:

1. Order Tank Package (Includes Float Valves, Supports, Top Tank Straps and Hardware)
2. Order Pump and Drive Parts
3. Order Plumbing Kit
4. Order Flow Divider or Outlet Manifold
5. Order Opener Hose
6. Order Fertilizer Openers and Brackets / Shanks if Desired

Liquid Fertilizer Tanks and Mounting Brackets - Order One per Planter

6001336	(2) 200 Gallon Tanks	433	2,754.00

Fertilizer Pumps and Drives - Order One per Planter

6001324	Piston Pump and Contact Wheel Drive	125	2,983.00
6001329	Contact Drive for Piston Pump (Pump not included)		1,464.00

Pump Plumbing Kit - Order One per Planter

6001337	Plumbing Kit for Piston Pump (Model 9202)	50	1,086.00
6001344	Plumbing Kit for Piston Pump (Model 9222)	50	1,086.00

Plumbing Kits Include: Hoses, Fittings, and Quick Fill Coupler

Flow Divider or Outlet Manifold Completing Package - Order One per Planter

Required for Piston Pumps Only

6100199	12 Row Flow Divider		1,958.00
6100195	12 Row Outlet Manifold (with Orifices and Check Valves)		872.00

Liquid Fertilizer Opener Hose - Order Four Rolls

6100200	Roll of Fertilizer Opener Hose, 3/8 inch x 48 Feet		92.00

Fertilizer Openers for Liquid Fertilizer - Order One Per Two Row Units

Note: Single Disc Fertilizer Openers can not be used with Tillage/Coulter Residue Manager Combination

6100459	Double Disc Opener - 13-1/2 inch Diameter	75	803.00
6000525	Single Disc Fertilizer Opener - Liquid Injector (Requires Orifice Tip or Nozzle to Complete - Source Locally)		1,293.00
6000527	Single Disc Fertilizer Opener - Liquid Side Knife		1,293.00
6000534	Single Disc Fertilizer Opener (25 Wave) Liquid Trailing Knife with Multi Wave Blade		1,293.00
6000355	Single Disc Fertilizer Opener (50 Wave) Liquid Trailing Knife with Ripple Blade (Includes One Right and One Left Hand Coulter)	176	1,319.00

Fertilizer Opener Brackets - See Chart on page 97 for Usage

6001106	Fertilizer Opener Bracket Set (RH and LH) (Order One per Two Rows)		323.00
6000609	Offset Shank Set for Single Disc Fertilizer Openers (Order One per Four Rows)	101	240.00

◆◆Dealer Installed◆◆ FERTILIZER DRIVE LOCK-UP - Order One per Planter — Optional

6001340	Fertilizer Drive Lock-Up		115.00

For use with 6001324, Piston Pump and Contact Wheel Drive or 6001329, Contact Drive

9500 Narrow Row Folding Planters

9500 Narrow Row Folding Planters

F.O.B. Hesston, Kansas

STANDARD EQUIPMENT

- 90 Bushel, 2 Section, Central Seed Hopper and Seed Distribution System
- 7" x 7" Forward Folding Frame with Hydraulic Cylinders, Hoses, and Frame Lock
- Hydraulic Lift with all Cylinders, Hoses and Transport Lock-Up
- Planter Units with: Air Metering, 16" Double Disc Openers, 4.5"x 16" Walking Beam Gauge Wheels, Cover and Meter Assemblies
- Chain Drive (Flex Drive not available for 9523 and 9531)
- Transport Wheels, with 31x13.5L-15, 12 Ply Tires
- Highway Transport Lighting
- Highway Transport Chain
- Seed Drain Kit
- Central Blower, Manifold, Flow Control Valve, Air Pressure, Gauge
- Micro Processor Controlled Variable Rate Hydraulic Drive

Requirements:

- Requires 3 Tractor Remotes if Using 10 GPM PTO Pump with 6.4 Gallon Reservoir (1 for Lift System, 1 for Frame Fold and Markers, and 1 for Central Fill Blower)
- Requires 4 Tractor Remotes If Using Direct Drive (1 for Seed Metering Blowers and Hydraulic Drive, 1 for Lift System, 1 for Frame Fold and Markers, and 1 for Central Fill Blower)
- Tractor Drawbar Reinforcement is recommended

Central Fill System (CFS) planters are designed for planting corn, soybeans, milo and popcorn. Large, Small, and Blank seed Meter Screens are Included with CFS.

# Rows	Spacing	Center Frame	Wings	Transport Width	Transport Wheels	Total Wheels
23	15”	194”	74”	200”	4	6
24	20"	194"	134"	195"	4	8
24	22"	168"	168"	188"	4	8
31	15"	194"	134"	200"	4	8

Ordering Instructions:
Planters are now available with many items Factory Installed.
Factory Installed items are not eligible for return to the factory.

1. Select One Order Code from Base, and One Order Code from Each Group as Required.
2. Order Required Seed Discs from 9000 Series Dealer Installed Section.
3. Additional Dealer Installed Items can be Ordered for these Models from this Chapter and from 9000 Series Dealer Installed Section.
4. Accepts Row Unit Mounted Tillage Attachments Only.

ORDER CODE	CATALOG NUMBER	DESCRIPTION	APPROX. WEIGHT (lb.)	LIST PRICE
NARROW ROW FOLDING PLANTERS				
WP9523	9523901	23 Row 15-inch Planter	16500	78,215.00
WP9524-20	9524902	24 Row 20-inch Planter	16725	91,588.00
WP9524-22	9524903	24 Row 22-inch Planter	17525	96,171.00
WP9531	9531901	31 Row 15-inch Planter	18475	93,947.00

ORDER CODE	CATALOG NUMBER	DESCRIPTION	APPROX. WEIGHT (lb.)	LIST PRICE
➢➢Factory Installed⮜⮜		**MARKERS AND MARKER DISCS - Order One per Planter**		**Required**
For 9523				
2-P215	6000866	Tri-Fold Break-Away Markers with Notched Marker Discs . .	1658	5,720.00
2-P210	6000864	Without Markers		No Charge
For 9524-20 and 9531				
2-P215	6000857	Tri-Fold Markers with Notched Marker Discs	1631	11,451.00
2-P210	6000860	Without Markers		No Charge
For 9524-22				
2-P215	6000858	Tri-Fold Markers with Notched Marker Discs	1658	11,590.00
2-P210	6000861	Without Markers		No Charge
➢➢Factory Installed⮜⮜		**CENTRAL FILL SYSTEM - Order One per Planter**		**Required**
9523				
18-CF11	6400934	90 Bushel Central Fill System		26,124.00
9524-20				
18-CF11	6400932	90 Bushel Central Fill System		26,367.00
18-CF10	In Base	Without Central Fill, Order Seed Hoppers below.		No Charge
9524-22				
18-CF11	6400933	90 Bushel Central Fill System		27,652.00
18-CF10	In Base	Without Central Fill, Order Seed Hoppers below.		No Charge
9531				
18-CF11	6400935	90 Bushel Central Fill System		32,049.00
➢➢Factory Installed⮜⮜		**SEED HOPPERS AND METERS - Order One per Planter Not Available for Models 9523 and 9531**		**Required**
9524-20				
5-HO12	6401042	Set of 24 Two-Bushel Hoppers and Meters	30	18,227.00
5-HO13	6401043	Set of 24 Three-Bushel Hoppers and Meters	35	21,375.00
5-HO10	6400834	Without Hoppers and Meters.		No Charge
9524-22				
5-HO12	6401033	Set of 24 Two-Bushel Hoppers and Meters	30	19,020.00
5-HO13	6401039	Set of 24 Three-Bushel Hoppers and Meters	35	22,305.00
5-HO10	6400834	Without Hoppers and Meters.		No Charge

ORDER CODE	CATALOG NUMBER	DESCRIPTION	APPROX. WEIGHT (lb.)	LIST PRICE
➢➢**Factory Installed**⮜⮜		**SEED METER DRIVE - Order One per Planter For 9524-20 and 9524-22 Only**		**Required**
9524-20				
3-D702	6400936	Flex Shaft Drive (for use with Auto Row Shut-Off) . . . . . (Includes Electric Clutch for Each Row)		13,800.00
3-D701	6400939	Chain Drive Without Auto Row Shut-Off		No Charge
9524-22				
3-D702	6400937	Flex Shaft Drive (for use with Auto Row Shut-Off) . . . . . (Includes Electric Clutch for Each Row)		13,800.00
3-D701	6400940	Chain Drive Without Auto Row Shut-Off		No Charge

Notes on Ordering Flex Shaft
- Requires: 6001400 Communication Module below.
- Flex Shaft is Not Compatible with Section Control Shut-Off Clutches or Standard Duty Down Pressure Springs
- To Add Auto Row Shut-Off Feature, Order 6001396 C3000 Terminal / Monitor and 10 Hz or Stronger GPS Receiver

◆◆**Dealer Installed**◆◆		**Communication Module Required to Operate Flex Shaft Above**		**Optional**
	6001400	Communication Module with 6 Programmable . . . . . Toggle Switches for use with Flex Shaft Seed Meter Drive. Six Toggle Switches Provide Manual Control for Six Sections		509.00

Note: The programmable communication module with toggle switches also provide manual back-up when using the Auto Row Shut-Off feature of the C3000 Terminal / Monitor if GPS signal is lost.

➢➢**Factory Installed**⮜⮜		**HYDRAULIC SUPPLY SYSTEM - Order One per Planter (Also Order from PTO Pump Adapter Group below)**		**Required**
21-P807	6400000	10 GPM PTO Pump with 6.4 Gallon Reservoir		2,067.00
21-P802	6400001	Direct Drive and Hoses . . . . . (Uses Existing Tractor Hydraulics)	30	148.00

◆◆**Dealer Installed**◆◆		**PTO PUMP ADAPTER - Order One per Planter**		**Required**
	6000747	1000 RPM PTO Pump Adapter for 1-3/4 inch Shaft		167.00
	6000748	1000 RPM PTO Pump Adapter for 1-3/8 inch Shaft		167.00
	6000777	Without PTO Pump Adapter (For Use with 21-P802)		No Charge

➢➢**Factory Installed**⮜⮜		**SEED TUBES AND SENSORS - Order One per Planter**		**Required**
For 23 Row				
16-P301	6401031	Seed Tubes with High Rate Sensors.		4,221.00
16-P303	6401032	Seed Tube with Seed Smart Sensors		6,930.00
For 24 Row				
16-P301	6400832	Seed Tubes with High Rate Sensors.		4,405.00
16-P303	6400833	Seed Tube with Seed Smart Sensors		7,231.00
For 31 Row				
16-P301	6401048	Seed Tubes with High Rate Sensors.		5,690.00
16-P303	6401049	Seed Tube with Seed Smart Sensors		9,340.00

ORDER CODE	CATALOG NUMBER	DESCRIPTION	APPROX. WEIGHT (lb.)	LIST PRICE

➢➢Factory Installed➢➢ CLOSING SYSTEM - Order One per Planter — Required

NOTE: Angled Closing Wheels are factory installed in the staggered position with the left wheel forward and with two spacers under the wheels.

9523

12-LR11	6401035	Angled Bracket with Rubber Closing Wheels	19	6,613.00
12-LR12	6401036	Angled Bracket with Cast Closing Wheels	54	7,613.00
12-LR13	6401037	Angled Bracket Without Closing Wheels (Order Closing Wheels from 9000 Series Dealer Installed Section)		3,734.00
12-LR10	6400803	Without Closing Wheels		No Charge

9524

12-LR11	6400838	Angled Bracket with Rubber Closing Wheels	19	6,900.00
12-LR12	6400839	Angled Bracket with Cast Closing Wheels	54	7,944.00
12-LR13	6400840	Angled Bracket Without Closing Wheels (Order Closing Wheels from 9000 Series Dealer Installed Section)		3,895.00
12-LR10	6400803	Without Closing Wheels		No Charge

9531

12-LR11	6401052	Angled Bracket with Rubber Closing Wheels	19	8,913.00
12-LR12	6401053	Angled Bracket with Cast Closing Wheels	54	10,261.00
12-LR13	6401054	Angled Bracket Without Closing Wheels (Order Closing Wheels from 9000 Series Dealer Installed Section)		5,032.00
12-LR10	6400803	Without Closing Wheels		No Charge

◆◆Dealer Installed◆◆ MONITOR SYSTEM - Order One per Planter — Required

Requires 6000923 Radar Ground Speed and Distance Sensing Gun or Radar 'Y' Harness.
For Use on Tractor with Radar.

	6001396	C3000 Terminal / Monitor	5,299.00
	6001313	C1000 Terminal / Monitor	2,803.00
	6000993	Without Monitor (Order only if Tractor is Equipped with an Existing ISO Terminal / Monitor)	No Charge

◆◆Dealer Installed◆◆ GROUND SPEED SENSOR - Order One per Planter — Required

	6000923	Radar Ground Speed and Distance Sensing Gun	15	1,049.00
	6100064	Radar "Y" Harness (4 pin round tractor connector to 4 pin round monitor connector)		152.00
	6000810	Without Ground Speed and Distance Sensing (For Use with 6000993) (Uses Existing Radar)		No Charge

Note: Part # 72515753 - Radar "Y" Harness
(4 pin flat tractor connector to a 4 pin round monitor connector)
(Above Two "Y" Harnesses for tractors equipped with Radar Speed Sensing)

ORDER CODE	CATALOG NUMBER	DESCRIPTION	APPROX. WEIGHT (lb.)	LIST PRICE
➢➢Factory Installed⮜⮜		**SECTION CONTROL SHUT-OFF - Order One per Planter**		**Required**
		Not for use with Automatic Row Shut-Off		
		Section Clutch Control incorporated in the Frame Fold Control Console		
9523 and 9531				
32-7P01	6401056	Without Section Control Shut-Off		No Charge
32-7P02	6401050	Section Control Third-Width Shut-Off . . . . . (Includes 3 Clutches and Harness)	50	2,758.00
9524-20				
32-7P01	6400364	Without Section Control Shut-Off		No Charge
32-7P02	6401058	Section Control Third-Width Shut-Off . . . . . (Includes 3 Clutches and Harness)	50	2,758.00
9524-22				
32-7P01	6400008	Without Section Control Shut-Off		No Charge
32-7P02	6400007	Section Control Third-Width Shut-Off . . . . . (Includes 3 Clutches and Harness)	50	2,758.00
➢➢Factory Installed⮜⮜		**ROW UNIT GAUGE WHEEL SCRAPERS - Order One per Planter**		**Optional**
7-PS01	6401059	Row Unit Gauge Wheel Scrapers, 9523		805.00
7-PS01	6400851	Row Unit Gauge Wheel Scrapers, 9524		840.00
7-PS01	6401060	Row Unit Gauge Wheel Scrapers, 9531		1,086.00
➢➢Factory Installed⮜⮜		**ADDITIONAL EQUIPMENT - Order One per Planter**		**Optional**
33-BZ01	6400756	Blower Inlet Screens . . . . . (Not for Use with P802, Direct Drive)		198.00
	71428520W	Ship Safe Preservative Coating (Recommended for . . . . . Protection When Shipped in Winter Months)		586.00

ORDER CODE	CATALOG NUMBER	DESCRIPTION	APPROX. WEIGHT (lb.)	LIST PRICE

➢➢Factory Installed⮜⮜ ROW UNIT MOUNTED TILLAGE - Order One per Planter — Required

Heavy Duty Down Pressure Springs or Pneumatic Down Pressure Recommended

9523

25-VA10	6400021	Without Unit Mounted Tillage Attachment		No Charge
25-VA13	6400559	Tillage Coulter with Ripple Blade	41	7,272.00
25-VA15	6400575	Tillage Coulter with 13 Flute Blade	37	7,272.00
25-VA18	6400583	Tillage Coulter with 25 Flute Blade		7,272.00
25-VA11	6400543	Tillage Coulter without Blade (Order Coulter Blades from 9000 Series Dealer Installed Section)		6,271.00
On 30" Row Width - Not Interplant Rows				
25-VA16	6400896	Residue Manager - Finger Wheel 13-inch Steel Wheel with 16 Fingers (For Use without Tillage Coulters)	37	4,608.00
25-VA19	6400897	Residue Manager - SharkTooth® Wheel 13-inch Steel Wheel with 12 Teeth (For Use without Tillage Coulters)		4,978.00
25-VA20	6400898	Floating Residue Manager - SharkTooth® Wheel with Depth Band, 13-inch Steel Wheel with 12 Teeth (For Use without Tillage Coulters)		6,748.00

9524

25-VA10	6400021	Without Unit Mounted Tillage Attachment		No Charge
25-VA13	6400560	Tillage Coulter with Ripple Blade	41	7,588.00
25-VA15	6400576	Tillage Coulter with 13 Flute Blade	37	7,588.00
25-VA18	6400584	Tillage Coulter with 25 Flute Blade		7,588.00
25-VA11	6400544	Tillage Coulter without Blade (Order Coulter Blades from 9000 Series Dealer Installed Section)		6,544.00
25-VA16	6400845	Residue Manager - Finger Wheel 13-inch Steel Wheel with 16 Fingers (For Use without Tillage Coulters)	37	9,217.00
25-VA19	6400846	Residue Manager - SharkTooth® Wheel 13-inch Steel Wheel with 12 Teeth (For Use without Tillage Coulters)		9,956.00
25-VA20	6400847	Floating Residue Manager - SharkTooth® Wheel with Depth Band, 13-inch Steel Wheel with 12 Teeth (For Use without Tillage Coulters)		13,495.00

9531

25-VA10	6400021	Without Unit Mounted Tillage Attachment		No Charge
25-VA13	6400561	Tillage Coulter with Ripple Blade	41	9,800.00
25-VA15	6400577	Tillage Coulter with 13 Flute Blade	37	9,800.00
25-VA18	6400585	Tillage Coulter with 25 Flute Blade		9,800.00
25-VA11	6400545	Tillage Coulter without Blade (Order Coulter Blades from 9000 Series Dealer Installed Section)		8,452.00
On 30" Row Width - Not Interplant Rows				
25-VA16	6400424	Residue Manager - Finger Wheel 13-inch Steel Wheel with 16 Fingers (For Use without Tillage Coulters)	37	6,145.00
25-VA19	6400439	Residue Manager - SharkTooth® Wheel 13-inch Steel Wheel with 12 Teeth (For Use without Tillage Coulters)		6,637.00
25-VA20	6400809	Floating Residue Manager - SharkTooth® Wheel with Depth Band, 13-inch Steel Wheel with 12 Teeth (For Use without Tillage Coulters)		8,996.00

ORDER CODE	CATALOG NUMBER	DESCRIPTION	APPROX. WEIGHT (lb.)	LIST PRICE

➢➢Factory Installed⮜⮜ COMBINATION RESIDUE MANAGER - Order 1 per Planter — Optional

Requires Factory Installed Row Unit Mounted Tillage Coulter (VA13, VA15, VA18 or VA11)
Recommend Heavy Duty Down Pressure Springs or Pneumatic Down Pressure

9523

26-K102	6400597	Residue Manager Attachment . . . . . 10-inch Steel Wheel with 16 Fingers and Bearing Shields	4,608.00
26-K103	6400605	Residue Manager Attachment . . . . . 13-inch Steel Wheel with 16 Fingers and Bearing Shields	4,608.00
26-K104	6400613	Residue Manager Attachment . . . . . 13-inch Steel SharkTooth® Wheel with 12 Teeth	4,570.00
26-K101	6400589	Residue Manager without Spoke Wheels . . . . . (Order Conversion Wheels from 9000 Series Dealer Installed Section)	1,145.00

9524

26-K102	6400600	Residue Manager Attachment . . . . . 10-inch Steel Wheel with 16 Fingers and Bearing Shields	9,217.00
26-K103	6400608	Residue Manager Attachment . . . . . 13-inch Steel Wheel with 16 Fingers and Bearing Shields	9,217.00
26-K104	6400616	Residue Manager Attachment . . . . . 13-inch Steel SharkTooth® Wheel with 12 Teeth	9,140.00
26-K101	6400592	Residue Manager without Spoke Wheels . . . . . (Order Conversion Wheels from 9000 Series Dealer Installed Section)	2,292.00

9531

26-K102	6400598	Residue Manager Attachment . . . . . 10-inch Steel Wheel with 16 Fingers and Bearing Shields	6,145.00
26-K103	6400606	Residue Manager Attachment . . . . . 13-inch Steel Wheel with 16 Fingers and Bearing Shields	6,145.00
26-K104	6400614	Residue Manager Attachment . . . . . 13-inch Steel SharkTooth® Wheel with 12 Teeth	6,093.00
26-K101	6400590	Residue Manager without Spoke Wheels . . . . . (Order Conversion Wheels from 9000 Series Dealer Installed Section)	1,527.00

◆◆Dealer Installed◆◆ GRANULAR INSECTICIDE ATTACHMENT — Optional

Granular Insecticide Attachment - Order One Per Two Rows

NOTE: Not for use with Flex Shaft Seed Meter Drive or Row Unit Lock-up Option

6001843	Granular Insecticide Kit with Brackets . . . . . For use with 2 Bushel Hoppers Only (Not for use with 3 Bushel Hoppers)	1,236.00
6001844	Granular Insecticide Kit with Brackets . . . . . For use with CFS Mini-Hoppers Only (Not for use with 2 or 3 Bushel Hoppers)	1,236.00

NOTE: Liquid Fertilizer Attachments are *NOT* available for these models.

RESERVED

9700 Toolbar Mounted Planters

9700 Toolbar Mounted Planters

F.O.B. Hesston, Kansas

STANDARD EQUIPMENT

- 7" x 7" Rigid Toolbar Frame or 7" x 7" Vertical Folding Toolbar Frame w/ Hydraulic Cylinders, Hoses & Lock-Up
- Planter Units with: Air Metering, Chain Drive Seed Meter, 16" Double Disc Openers, 4.5"x 16" Walking Beam Gauge Wheels
- Direct Drive Quick Couplers
- Fixed Drive Wheels with 9.5L-15, 6 Ply Tires
- Adjustable Hitch for Category II or III
- Parking Stands
- Highway Transport Lighting; Highway Transport Chain
- Seed Drain Kit

Ground Drive Planters (8 Row):
- Central Blower, Manifold, Flow Control Valve and Air Pressure Gauge, High Rate Seed Sensors

Ground Drive Planters (12 Row):
- Central Blower, Manifold, Flow Control Valve and Air Pressure Gauge

Hydraulic Drive Planter (Optional for 12 Row):
- Central Blower, Manifold, Couplers for Direct Drive, Flow Control Valve and Air Pressure Gauge (Uses Tractor Hyd.- Requires min. 8 GPM @ 2000psi Consult Tractor Manufacturer to Verify Hydraulic Sys.)
- Micro Processor Controlled Variable Rate Hydraulic Drive

	# Rows	Spacing	Center Frame	Wings	Transport Width	Wheels
Rigid Frames						
	8	30"	228"	—-	248"	2 Drive Wheels
	12	30"	348"	—-	368"	4 Drive Wheels (Ground Drive) 2 Gauge Wheels (Hydraulic Drive)
Vertical Folding Frames						
	12	30"	169"	99"	256"	4 Drive Wheels (Ground Drive) 4 Gauge Wheels (Hydraulic Drive)

Ordering Instructions:
Planters are now available with many items Factory Installed.
Factory Installed items are not eligible for return to the factory.

1. Select One Order Code from Base, and One Order Code from Each Group as Required.
2. Order Required Seed Discs from 9000 Series Dealer Installed Section.
3. Additional Dealer Installed Items can be Ordered for these Models from this Chapter and from 9000 Series Dealer Installed Section.
4. Accepts Row Unit or Frame Mounted Tillage Attachments.

NOTE: Direct Drive requires 2 remote valves for rigid frames and 3 remote valves for folding frames.

ORDER CODE	CATALOG NUMBER	DESCRIPTION	APPROX. WEIGHT (lb.)	LIST PRICE
TOOLBAR MOUNTED PLANTERS				
WP9708	9708902	8 Row 30-inch Planter, Rigid Frame	4635	17,897.00
WP9702	9702901	12 Row 30-inch Planter, Rigid Frame	6659	24,219.00
WP9722	9722901	12 Row 30-inch Planter, Vertical. . . . . Folding Frame	6584	32,665.00

WP9700 Toolbar

ORDER CODE	CATALOG NUMBER	DESCRIPTION	APPROX. WEIGHT (lb.)	LIST PRICE
MARKERS - Order One Set per Planter				**Required**
8-Row Rigid Frame Planter 9708				
2-P211	6000273	Folding Markers - Factory Installed	250	3,000.00
	6100094	Notched Marker Disc - Dealer Installed	41	458.00
	6001169	Flat Fold Break-Away Markers - Dealer Installed	1000	5,447.00
2-P202	6000274	Without Markers		No Charge
	6000362	Without Marker Disc		No Charge
12-Row Rigid Frame Planter 9702				
2-P211	6000275	Folding Markers - Factory Installed	433	2,548.00
	6100094	Notched Marker Disc - Dealer Installed	41	458.00
	6001170	Flat Fold Break-Away Markers - Dealer Installed	1000	6,110.00
2-P202	6000276	Without Markers		No Charge
	6000362	Without Marker Disc		No Charge
12-Row Vertical Fold Planter 9722				
2-P211	6000823	Folding Markers - Factory Installed	433	2,548.00
	6100094	Notched Marker Disc - Dealer Installed	41	458.00
2-P202	6000824	Without Markers		No Charge
	6000362	Without Marker Disc		No Charge
SEED HOPPERS AND METERS - See Order Requirements Below				**Required**
8-Row Planter 9708				
5-HO12	6400981	Set of 8 Two-Bushel Hoppers and Meters - Factory Installed **Order One per Planter**	30	6,340.00
	6001647	Three-Bushel Hopper and Meter - Dealer Installed **Order One per Row**	35	929.00
5-HO10	6400880	Without Hoppers and Meters. **Order One per Planter**		No Charge
12-Row Planter 9702				
5-HO12	6400886	Set of 12 Two-Bushel Hoppers and Meters - Factory Installed **Order One per Planter**	30	9,510.00
	6001647	Three-Bushel Hopper and Meter - Dealer Installed **Order One per Row**	35	929.00
5-HO10	6400903	Without Hoppers and Meters. **Order One per Planter**		No Charge
12-Row Planter 9722				
5-HO12	6400886	Set of 12 Two-Bushel Hoppers and Meters - Factory Installed **Order One per Planter**	30	9,510.00
5-HO10	6400903	Without Hoppers and Meters. **Order One per Planter**		No Charge

WP9700 Toolbar

WHITE PLANTERS

ORDER CODE	CATALOG NUMBER	DESCRIPTION	APPROX. WEIGHT (lb.)	LIST PRICE

➢➢Factory Installed⮜⮜ DRIVE - for 12 Row Planters Only - Order One per Planter — Required

(8 Row Planter is Ground Drive only)

12-Row Rigid Frame Planters 9702

20-DO10	6400105	Ground Drive		No Charge
20-DO11	6401149	Hydraulic Drive	40	6,320.00

12-Row Planters - Vertical Fold 9722

20-DO10	6400107	Ground Drive		No Charge
20-DO11	6401149	Hydraulic Drive	40	6,320.00

Notes on Ordering Hydraulic Drive

Also Requires Radar Distance Sensing or Radar "Y" Harness from Ground Speed Sensor Group

◆◆Dealer Installed◆◆ HYDRAULIC SUPPLY SYSTEM - Order One per Planter — Optional

For use with Ground Drive Only

	6001047	540 RPM PTO Pump	37	1,524.00
	6001048	1000 RPM PTO Pump with 1-3/8 inch Spline Shaft	34	1,678.00
	6001049	1000 RPM PTO Pump with 1-3/4 inch Spline Shaft		1,678.00

➢➢Factory Installed⮜⮜ SEED TUBES AND SENSORS - Order One per Planter — Required

8-Row Planter

16-P301	6400879	Seed Tubes with High Rate Sensors		No Charge

12-Row Planters

16-P301	6400884	Seed Tubes with High Rate Sensors		2,202.00
16-P303	6400885	Seed Tubes with Seed Smart Sensors (Requires SM400SE Seed Population Monitor, or C1000, or C3000 Terminal / Monitor)		3,615.00

◆◆Dealer Installed◆◆ CLOSING SYSTEM - Order One per Row — Optional

	6001650	Angled Bracket with Rubber Closing Wheels	19	287.00
	6001651	Angled Bracket with Cast Closing Wheels	54	331.00
	6001653	Single “V” Trench Press Wheel	21	273.00
	6001652	Angled Bracket without Closing Wheels (Order Closing Wheels from 9000 Series Dealer Installed Section)		163.00

ORDER CODE	CATALOG NUMBER	DESCRIPTION	APPROX. WEIGHT (lb.)	LIST PRICE
◆◆Dealer Installed◆◆		**MONITOR SYSTEM - Order One per Planter**		**Required**
For 6000100 or 6000805, must order 6000810 Without Ground Speed and Distance Sensing				
For 8 Row Ground Drive Planters				
	6000806	SM300 Seed Population Monitor (Up to 8 Rows) (Requires Magnetic Ground Speed Sensor or Radar Ground Speed and Distance Sensing Gun)	25	1,625.00
	6000805	SM100 Seed Flow Monitor (Up to 8 Rows)	20	1,194.00
	6000100	Without Monitor		No Charge
For 12 Row Ground Drive Planters				
If Tractor is Equipped with ISO Terminal / Monitor, Order 6000100 and 6001214 Monitor Bridge Package from 9000 Series Dealer Installed Section.				
	6000807	SM400SE Seed Population Monitor (12 and 16 Rows) (Requires Magnetic Ground Speed Sensor or Radar Ground Speed and Distance Sensing Gun)	25	2,324.00
	6000100	Without Monitor		No Charge
For 12 Row Hydraulic Drive Planter				
Requires 6000923 Radar Ground Speed and Distance Sensing Gun or 6100064 Radar "Y" Harness. For Use on Tractor with Radar.				
	6001396	C3000 Terminal / Monitor		5,299.00
	6001313	C1000 Terminal / Monitor		2,803.00
	6000993	Without Monitor (Order only if Tractor is Equipped with an Existing ISO Terminal / Monitor)		No Charge
◆◆Dealer Installed◆◆		**GROUND SPEED SENSOR - Order One per Planter**		**Required**
	6100059	Magnetic Ground Speed Sensor (8 rows)	4	160.00
	6000955	Magnetic Ground Speed Sensor (12 Row)		194.00
	6000923	Radar Ground Speed and Distance Sensing Gun	15	1,049.00
	6100064	Radar "Y" Harness (4 pin round tractor connector to 4 pin round monitor connector)		152.00
	6000810	Without Ground Speed and Distance Sensing (Uses Existing Radar) (For Use with 6000100, 6000805 or 6000993)		No Charge

Note: Part # 72515753 - Radar "Y" Harness
(4 pin flat tractor connector to a 4 pin round monitor connector)
(Above Two "Y" Harnesses for tractors equipped with Radar Speed Sensing)

◆◆Dealer Installed◆◆		**ADDITIONAL WHEELS - Order One per Planter**		**Optional**
NOTE: Tractor must be able to be ballasted to carry the planter if lift assist wheels are not ordered.				
	6001192	Two Rear Lift-Assist Wheels	769	5,025.00
	6001193	Additional Set of (2) Drive Wheels (Includes 2 Drive / Gauge Wheel Assemblies, Clutches and Chains)		1,959.00
➢➢Factory Installed⮜⮜		**ADDITIONAL EQUIPMENT - Order One per Planter**		**Optional**
33-BZ01	6400755	Blower Inlet Screen		99.00
9-A903	6400768	Transmission Shield		25.00
7-PS01	6400989	Row Unit Gauge Wheel Scrapers (9708)		280.00
7-PS01	6400902	Row Unit Gauge Wheel Scrapers (9702 and 9722)		420.00
	71428520W	Ship Safe Preservative Coating (Recommended for Protection When Shipped in Winter Months)		586.00

WP9700 Toolbar

WHITE PLANTERS

ORDER CODE	CATALOG NUMBER	DESCRIPTION	APPROX. WEIGHT (lb.)	LIST PRICE
➢➢**Factory Installed**⮜⮜		**DOWN PRESSURE SYSTEM - Order One per Planter**		**Required**
8-Row Planter				
23-KB12	6400983	Heavy Duty Down Pressure Springs	12	1,621.00
23-KB11	6400982	Standard Duty Down Pressure Springs . . . . . (Not Compatible with Row Unit Mounted Attachments)	7	526.00
23-KB10	6400027	Without Down Pressure Springs		No Charge
12-Row Planters				
23-KB12	6400895	Heavy Duty Down Pressure Springs	12	2,432.00
23-KB11	6400894	Standard Duty Down Pressure Springs . . . . . (Not Compatible with Row Unit Mounted Attachments)	7	789.00
23-KB10	6400027	Without Down Pressure Springs		No Charge
◆◆**Dealer Installed**◆◆		**PNEUMATIC DOWN PRESSURE**		**Optional**
	6001842	Pneumatic Down Pressure (4 Row Set) . . . . . Order One per 4 Rows **Requires Compressor and Hose**		896.00
	6001466	Pneumatic Down Pressure Compressor	20	844.00
	6001370	Pneumatic Down Pressure Hose (100 Feet) . . . . . (Will Plumb Up to 12 Rows)		181.00

ORDER CODE	CATALOG NUMBER	DESCRIPTION	APPROX. WEIGHT (lb.)	LIST PRICE

➢➢Factory Installed➢➢ ROW UNIT MOUNTED TILLAGE - Order One per Planter — Required

Heavy Duty Down Pressure Springs or Pneumatic Down Pressure Recommended

8-Row Planter

25-VA10	6400021	Without Unit Mounted Tillage Attachment		No Charge
25-VA13	6400556	Tillage Coulter with Ripple Blade	41	2,530.00
25-VA15	6400572	Tillage Coulter with 13 Flute Blade	41	2,530.00
25-VA18	6400580	Tillage Coulter with 25 Flute Blade	41	2,530.00
25-VA16	6400984	Residue Manager - Finger Wheel 13-inch Steel Wheel with 16 Fingers (For Use without Tillage Coulters)	37	3,072.00
25-VA19	6400985	Residue Manager - SharkTooth® Wheel 13-inch Steel Wheel with 12 Teeth (For Use without Tillage Coulters)		3,319.00
25-VA20	6400986	Floating Residue Manager - SharkTooth® Wheel with Depth Band, 13-inch Steel Wheel with 12 Teeth (For Use without Tillage Coulters)		4,498.00
25-VA11	6400540	Tillage Coulter without Blade (Order Coulter Blades from 9000 Series Dealer Installed Section)		2,182.00

12-Row Planters

25-VA10	6400021	Without Unit Mounted Tillage Attachment		No Charge
25-VA13	6400557	Tillage Coulter with Ripple Blade	41	3,793.00
25-VA15	6400573	Tillage Coulter with 13 Flute Blade	41	3,793.00
25-VA18	6400581	Tillage Coulter with 25 Flute Blade	41	3,793.00
25-VA16	6400896	Residue Manager - Finger Wheel 13-inch Steel Wheel with 16 Fingers (For Use without Tillage Coulters)	37	4,608.00
25-VA19	6400897	Residue Manager - SharkTooth® Wheel 13-inch Steel Wheel with 12 Teeth (For Use without Tillage Coulters)		4,978.00
25-VA20	6400898	Floating Residue Manager - SharkTooth® Wheel with Depth Band, 13-inch Steel Wheel with 12 Teeth (For Use without Tillage Coulters)		6,748.00
25-VA11	6400541	Tillage Coulter without Blade (Order Coulter Blades from 9000 Series Dealer Installed Section)		3,272.00

WP9700 Toolbar

WHITE PLANTERS

ORDER CODE	CATALOG NUMBER	DESCRIPTION	APPROX. WEIGHT (lb.)	LIST PRICE

➢➢Factory Installed⮜⮜ COMBINATION RESIDUE MANAGER - Order 1 per Planter — Optional

Requires Factory Installed Row Unit Mounted Tillage Coulter (VA13, VA15, VA18 or VA11)
Recommend Heavy Duty Down Pressure Springs or Pneumatic Down Pressure

8-Row Planter

26-K102	6400596	Residue Manager Attachment . . . . . 10-inch Steel Wheel with 16 Fingers and Bearing Shields	3,072.00
26-K103	6400604	Residue Manager Attachment . . . . . 13-inch Steel Wheel with 16 Fingers and Bearing Shields	3,072.00
26-K104	6400612	Residue Manager Attachment . . . . . 13-inch Steel SharkTooth® Wheel with 12 Teeth	3,047.00
26-K101	6400588	Residue Manager without Spoke Wheels . . . . . (Order Wheels from 9000 Series Dealer Installed Section)	764.00

12-Row Planters

26-K102	6400597	Residue Manager Attachment . . . . . 10-inch Steel Wheel with 16 Fingers and Bearing Shields	4,608.00
26-K103	6400605	Residue Manager Attachment . . . . . 13-inch Steel Wheel with 16 Fingers and Bearing Shields	4,608.00
26-K104	6400613	Residue Manager Attachment . . . . . 13-inch Steel SharkTooth® Wheel with 12 Teeth	4,570.00
26-K101	6400589	Residue Manager without Spoke Wheels . . . . . (Order Wheels from 9000 Series Dealer Installed Section)	1,145.00

◆◆Dealer Installed◆◆ GRANULAR INSECTICIDE ATTACHMENT — Optional

Granular Insecticide Attachment - Order One Per Two Rows

NOTE: Not for use with Flex Shaft Seed Meter Drive or Row Unit Lock-up Option

	6001843	Granular Insecticide Kit with Brackets . . . . . For use with 2 Bushel Hoppers Only (Not for use with 3 Bushel Hoppers)	1,236.00
	6100221	Insecticide Hopper Seal Kit . . . . . For use on the 9722 Row Units on the Wings	81.00

NOTE: Liquid Fertilizer Attachments are *NOT* available for these models.

9700 Stack-fold Mounted Planters

9700 Stack-fold Mounted Planters

F.O.B. Hesston, Kansas

STANDARD EQUIPMENT

- 7" x 7" Toolbar Frame with Hydraulic Cylinders, Hoses and Transport Lock-up
- Planter Units with: Air Metering, Chain Drive Seed Meter, 16" Double Disc Openers, 4.5"x 16" Walking Beam Gauge Wheels
- Fixed Drive Wheels with 9.5L-15, 6 Ply Tires
- Direct Drive Quick Couplers
- Adjustable Hitch for Category III or III-N
- Parking Stands
- Highway Transport Lighting
- Seed Drain Kit
- Central Blower, Manifold, Flow Control Valve and Air Pressure Gauge
- Gull Wing Package (Standard on 9792 and 9776)

Ground Drive Planters:
- Central Blower, Manifold, Flow Control Valve and Air Pressure Gauge, Blower Inlet Screen
- Non-ISO Seed Monitoring (9772)
- ISO Seed Monitoring (9792 and 9776)

Hydraulic Drive Planters:
- Central Blower, Manifold, Couplers for Direct Drive, Flow Control Valve and Air Pressure Gauge (Uses Tractor Hyd.- Requires min. 30 GPM @ 2000 psi with PTO Pump)
- Seed Drive Disconnect - Implement Lift Switch
- Micro Processor Controlled Variable Rate Hydraulic Drive
- ISO Control and Seed Monitoring

Requirements:
- Direct Drive Hydraulics Require 4 Remote Valves

# Rows	Spacing	Center Frame	Wings	Transport Width	Drive Wheels
12	30"	180"	86"	20'8"	4
12	36”	220"	118"	20'4"	4
12	38”	233"	134"	25'0"	4
12	40”	233"	134"	25'0"	4
16	30"	237"	137"	26'2"	4

Ordering Instructions:
Planters are now available with many items Factory Installed.
Factory Installed items are not eligible for return to the factory.

1. Select One Order Code from Base, and One Order Code from Each Group as Required.
2. Order Required Seed Discs from 9000 Series Dealer Installed Section.
3. Additional Dealer Installed Items can be Ordered for these Models from this Chapter and from 9000 Series Dealer Installed Section.
4. Accepts Row Unit Mounted Tillage Attachments Only.
5. If Lift Assist Wheels on 12 Row are Desired, Order from Orthman Manufacturing, Lexington, NE. Phone (308) 324-4654.

ORDER CODE	CATALOG NUMBER	DESCRIPTION	APPROX. WEIGHT (lb.)	LIST PRICE
STACK-FOLD MOUNTED PLANTERS				
WP9772	9772900	12 Row 30-inch Planter	6265	34,005.00
WP9792	9792903	12 Row 36-inch Planter	8365	42,639.00
WP9792	9792904	12 Row 38-inch Planter	8640	42,639.00
WP9792	9792905	12 Row 40-inch Planter	8640	42,639.00
WP9776	9776901	16 Row 30-inch Planter	10450	42,939.00

ORDER CODE	CATALOG NUMBER	DESCRIPTION	APPROX. WEIGHT (lb.)	LIST PRICE
➢➢Factory Installed➣➣		**ROW SPACING - For 9792 Only - Order One per Planter**		**Required**
4-36 INCH	6400909	36-inch Row Spacing		No Charge
4-38 INCH	6400910	38-inch Row Spacing		No Charge
4-40 INCH	6400911	40-inch Row Spacing		No Charge
◆◆Dealer Installed◆◆		**MARKERS - Order One per Planter**		**Optional**
Includes Notched Marker Discs				
	6001168	Rear Folding Markers, 9772		8,886.00
	6001303	Rear Folding Markers, 9792 and 9776		10,960.00
➢➢Factory Installed➣➣		**SEED HOPPERS AND METERS - Order One per Planter**		**Required**
12-Row Planters				
5-HO12	6400886	Set of 12 Two-Bushel Hoppers and Meters	30	9,510.00
5-HO13	6400887	Set of 12 Three-Bushel Hoppers and Meters (9792 Only)	30	11,152.00
5-HO10	6400903	Without Hoppers and Meters.		No Charge
16-Row Planter				
5-HO12	6400799	Set of 16 Two-Bushel Hoppers and Meters	30	12,680.00
5-HO13	6400800	Set of 16 Three-Bushel Hoppers and Meters	30	14,869.00
5-HO10	6400802	Without Hoppers and Meters.		No Charge
➢➢Factory Installed➣➣		**SEED METER DRIVE - Order One per Planter**		**Required**
For 9792				
3-D702	6400919	Flex Shaft Drive (for use with Auto Row Shut-Off) (Includes Electric Clutch for Each Row)		6,900.00
3-D701	6400918	Chain Drive without Auto Row Shut-Off		No Charge
For 9776				
3-D702	6400921	Flex Shaft Drive (for use with Auto Row Shut-Off) (Includes Electric Clutch for Each Row)		9,200.00
3-D701	6400920	Chain Drive without Auto Row Shut-Off		No Charge

Notes on Ordering Flex Shaft
- Requires: 6001400 Communication Module below.
- To Add Auto Row Shut-Off Feature, Order 6001396 C3000 Terminal / Monitor and 10 Hz or Stronger GPS Receiver
- Flex Shaft is Not Compatible with Section Control Shut-Off or Standard Duty Down Pressure Springs

◆◆Dealer Installed◆◆		**Communication Module Required to Operate Flex Shaft Above**		**Optional**
	6001400	Communication Module with 6 Programmable Toggle Switches for use with Flex Shaft Seed Meter Drive. Six Toggle Switches Provide Manual Control for Six Sections		509.00

The programmable communication module with toggle switches also provide manual back-up when using the Auto Row Shut-Off feature of the C3000 Terminal / Monitor if GPS signal is lost.

WP9700 Stack-fold

WHITE PLANTERS

ORDER CODE	CATALOG NUMBER	DESCRIPTION	APPROX. WEIGHT (lb.)	LIST PRICE
➢➢Factory Installed⮜⮜		**DRIVE - Order One per Planter**		**Required**
For 9772				
20-D010	In Base	Ground Drive		No Charge
For 9792-36				
20-D011	6400299	Hydraulic Drive		1,436.00
20-D010	6400298	Ground Drive		No Charge
For 9792-38 and 9792-40				
20-D011	6400306	Hydraulic Drive		1,436.00
20-D010	6400305	Ground Drive		No Charge
For 9776				
20-D011	6400301	Hydraulic Drive		1,436.00
20-D010	6400300	Ground Drive		No Charge
HYDRAULIC SUPPLY SYSTEM - Order One per Planter				**Required**
(Also Order from PTO Pump Adapter Group as necessary)				
For Ground Drive Planter 9772				
	6001047	540 RPM PTO Pump	37	1,524.00
	6001048	1000 RPM PTO Pump for 1-3/8 inch Spline Shaft	34	1,678.00
	6001049	1000 RPM PTO Pump for 1-3/4 inch Spline Shaft		1,678.00
21-P802	In Base	**Factory Installed** Direct Drive and Hoses (Uses Existing Tractor Hydraulics)	30	No Charge
For Ground Drive Planters 9792, 9776				
	6001047	540 RPM PTO Pump	37	1,524.00
	6001048	1000 RPM PTO Pump for 1-3/8 inch Spline Shaft	34	1,678.00
	6001049	1000 RPM PTO Pump for 1-3/4 inch Spline Shaft		1,678.00
21-P802	6400319	**Factory Installed** Direct Drive and Hoses (without oil coolers) (Uses Existing Tractor Hydraulics)	30	250.00
For Hydraulic Drive Planter 9792				
21-P801	6400327	**Factory Installed** 14 GPM PTO Pump with 8.5 Gallon Reservoir (Requires PTO Pump Adapter Below)	100	2,067.00
21-P803	6400320	**Factory Installed** Direct Drive and Hoses (without oil coolers) (Uses Existing Tractor Hydraulics)	30	250.00
For Hydraulic Drive Planter 9776				
21-P801	6400328	**Factory Installed** 14 GPM PTO Pump with 8.5 Gallon Reservoir (Requires PTO Pump Adapter Below)	100	2,067.00
21-P803	6400320	**Factory Installed** Direct Drive and Hoses (without oil coolers) (Uses Existing Tractor Hydraulics)	30	250.00
◆◆Dealer Installed◆◆		**PTO PUMP ADAPTER - Order One per Planter**		**Optional**
For Hydraulic Drive Planters with 21-P801				
	6000747	1000 RPM PTO Pump Adapter for 1-3/4 inch Shaft		167.00
	6000748	1000 RPM PTO Pump Adapter for 1-3/8 inch Shaft		167.00

ORDER CODE	CATALOG NUMBER	DESCRIPTION	APPROX. WEIGHT (lb.)	LIST PRICE

➢➢Factory Installed⮜⮜ SEED TUBES AND SENSORS - Order One per Planter — Required

12-Row Planters

16-P301	6400884	Seed Tubes with High Rate Sensors.		2,202.00
16-P303	6400885	Seed Tubes with Seed Smart Sensors.		3,615.00

16-Row Planter

16-P301	6400814	Seed Tubes with High Rate Sensors.		2,937.00
16-P303	6400815	Seed Tubes with Seed Smart Sensors.		4,820.00

➢➢Factory Installed⮜⮜ CLOSING SYSTEM - Order One per Planter — Required

NOTE: Angled Closing Wheels are factory installed in the staggered position with the left wheel forward and with two spacers under the wheels.

12-Row Planters

12-LR11	6400890	Angled Bracket with Rubber Closing Wheels	19	3,451.00
12-LR12	6400891	Angled Bracket with Cast Closing Wheels	54	3,972.00
12-LR14	6400423	Single “V” Trench Press Wheel	21	3,278.00
12-LR13	6400892	Angled Bracket Without Closing Wheels. . . . . (Order Closing Wheels from 9000 Series Dealer Installed Section)		1,948.00
12-LR10	6400803	Without Closing Wheels		No Charge

16-Row Planter

12-LR11	6400804	Angled Bracket with Rubber Closing Wheels	19	4,600.00
12-LR12	6400807	Angled Bracket with Cast Closing Wheels	54	5,296.00
12-LR14	6401001	Single “V” Trench Press Wheel	21	4,370.00
12-LR13	6400806	Angled Bracket Without Closing Wheels. . . . . (Order Closing Wheels from 9000 Series Dealer Installed Section)		2,597.00
12-LR10	6400803	Without Closing Wheels		No Charge

◆◆Dealer Installed◆◆ MONITOR SYSTEM - Order One per Planter — Required

Requires 6000923 Radar Ground Speed and Distance Sensing Gun or 6100064 Radar "Y" Harness.
For Use on Tractor with Radar.

For 9772

If Tractor is Equipped with ISO Terminal / Monitor,
Order 6000100 and 6001214 Monitor Bridge Package from 9000 Series Dealer Installed Section.

	6000807	SM400SE Seed Population Monitor (12 and 16 Rows) . . . (Requires Magnetic Ground Speed Sensor or Radar Ground Speed and Distance Sensing Gun)	25	2,324.00
	6000100	Without Monitor . . . . . (Must order 6000810 Without Ground Speed and Distance Sensing)		No Charge

For 9792, 9776

	6001396	C3000 Terminal / Monitor		5,299.00
	6001313	C1000 Terminal / Monitor		2,803.00
	6000993	Without Monitor (Order only if Tractor is Equipped with an Existing ISO Terminal / Monitor)		No Charge

WP9700 Stack-fold

WHITE PLANTERS

ORDER CODE	CATALOG NUMBER	DESCRIPTION	APPROX. WEIGHT (lb.)	LIST PRICE
◆◆Dealer Installed◆◆		**GROUND SPEED SENSOR - Order One per Planter**		**Required**
	6000988	Magnetic Ground Speed Sensor (9772)	4	194.00
	6000955	Magnetic Ground Speed Sensor (9792, 9776)	4	194.00
	6000923	Radar Ground Speed and Distance Sensing Gun	15	1,049.00
	6100064	Radar "Y" Harness (4 pin round tractor connector to 4 pin round monitor connector)		152.00
	6000810	Without Ground Speed and Distance Sensing (For Use with 6000100)		No Charge

Note: Part # 72515753 - Radar "Y" Harness
(4 pin flat tractor connector to a 4 pin round monitor connector)
(Above Two "Y" Harnesses for tractors equipped with Radar Speed Sensing)

➢➢Factory Installed⮜⮜		**SECTION CONTROL SHUT-OFF - Order One per Planter** **Requires Controller 6001305** **For 9792 and 9776 ONLY**		**Required**
32-7P01	6400295	Without Section Control Shut-Off		No Charge
32-7P04	6400294	Section Control Shut-Off for Ground Drive (4 equal sections)	50	4,774.00
32-7P02	6400334	Section Control Shut-Off for Hydraulic Drive (4 equal sections)	50	4,774.00
◆◆Dealer Installed◆◆		**CONTROLLER - Order One per Planter**		**Optional**
	6001305	Section Control Shut-Off Controller (Required only with Factory Installed Section Control Shut-Off)		403.00
➢➢Factory Installed⮜⮜		**ADDITIONAL EQUIPMENT - Order One per Planter**		**Optional**
33-BZ01	6400755	Blower Inlet Screen (Not for Use with P802 or P803, Direct Drive)		99.00
9-A903	6400770	Transmission Shield (for use with Ground Drive)		73.00
7-PS01	6400902	Row Unit Gauge Wheel Scrapers (9772 and 9792)		420.00
7-PS01	6400816	Row Unit Gauge Wheel Scrapers (9776)		560.00
	71428520W	Ship Safe Preservative Coating (Recommended for Protection When Shipped in Winter Months)		586.00
◆◆Dealer Installed◆◆		**ADDITIONAL EQUIPMENT - See Below for Order Quantities**		**Optional**
For 9772				
	6000900	Gull Wing Kit when Operating Planter in Flex Mode		839.00
For 9776				
	6001302	Lift Assist Transport Wheels		10,289.00
	6001299	Dual Seed Meter Blower Kit for Hydraulic Drive Planters Equipped with Direct Drive Couplers		2,076.00
	6001300	Dual Seed Meter Blower Kit for Hydraulic Drive Planters Equipped with PTO Pump		2,120.00
	6001301	Dual Seed Meter Blower Kit for Ground Drive Planters		2,247.00

WP9700 Stack-fold

ORDER CODE	CATALOG NUMBER	DESCRIPTION	APPROX. WEIGHT (lb.)	LIST PRICE
➢➢Factory Installed≺≺		**DOWN PRESSURE SYSTEM - Order One per Planter**		**Required**
12-Row Planters				
23-KB14	6400367	Pneumatic Down Pressure System (9792 Only) . . . . . **Requires 6001466 Compressor Below**	165	2,688.00
23-KB12	6400895	Heavy Duty Down Pressure Springs	12	2,432.00
23-KB11	6400894	Standard Duty Down Pressure Springs . . . . . (Not Compatible with Row Unit Mounted Attachments)	7	789.00
23-KB10	6400027	Without Down Pressure Springs		No Charge
16-Row Planter				
23-KB14	6400368	Pneumatic Down Pressure System . . . . . **Requires 6001466 Compressor Below**	220	3,584.00
23-KB12	6400811	Heavy Duty Down Pressure Springs	12	3,242.00
23-KB11	6400812	Standard Duty Down Pressure Springs . . . . . (Not Compatible with Row Unit Mounted Attachments)	7	1,053.00
23-KB10	6400027	Without Down Pressure Springs		No Charge
◆◆Dealer Installed◆◆		**PNEUMATIC DOWN PRESSURE - Order Three per Planter**		**Optional**
For 9772 ONLY				
	6001842	Pneumatic Down Pressure (4 Row Set) . . . . . Order One per 4 Rows **Requires Compressor and Hose**		896.00
◆◆Dealer Installed◆◆		**COMPRESSOR - Order One per Planter** **For Use with Pneumatic Down Pressure**		**Optional**
	6001466	Pneumatic Down Pressure Compressor . . . . . (Required with Factory or Dealer Installed Pneumatic Down Pressure)	20	844.00
	6001370	Pneumatic Down Pressure Hose (100 Feet) . . . . . (Will Plumb Up to 12 Rows) **Not Required with Factory Installed Pneumatic Down Pressure**		181.00

WP9700 Stack-fold

WHITE PLANTERS

ORDER CODE	CATALOG NUMBER	DESCRIPTION	APPROX. WEIGHT (lb.)	LIST PRICE
➢➢Factory Installed⮜⮜		**ROW UNIT MOUNTED TILLAGE - Order One per Planter**		**Required**
Heavy Duty Down Pressure Springs or Pneumatic Down Pressure Recommended				
12-Row Planters				
25-VA10	6400021	Without Unit Mounted Tillage Attachment		No Charge
25-VA13	6400557	Tillage Coulter with Ripple Blade	41	3,793.00
25-VA15	6400573	Tillage Coulter with 13 Flute Blade	41	3,793.00
25-VA18	6400581	Tillage Coulter with 25 Flute Blade		3,793.00
25-VA16	6400896	Residue Manager - Finger Wheel 13-inch Steel Wheel with 16 Fingers (For Use without Tillage Coulters)	37	4,608.00
25-VA19	6400897	Residue Manager - SharkTooth® Wheel 13-inch Steel Wheel with 12 Teeth (For Use without Tillage Coulters)		4,978.00
25-VA20	6400898	Floating Residue Manager - SharkTooth® Wheel with Depth Band, 13-inch Steel Wheel with 12 Teeth (For Use without Tillage Coulters)		6,748.00
25-VA11	6400541	Tillage Coulter without Blade (Order Coulter Blades from 9000 Series Dealer Installed Section)		3,272.00
16-Row Planter				
25-VA10	6400021	Without Unit Mounted Tillage Attachment		No Charge
25-VA13	6400558	Tillage Coulter with Ripple Blade	41	5,058.00
25-VA15	6400574	Tillage Coulter with 13 Flute Blade	41	5,058.00
25-VA18	6400582	Tillage Coulter with 25-inch Flute Blade		5,058.00
25-VA16	6400424	Residue Manager - Finger Wheel 13-inch Steel Wheel with 16 Fingers (For Use without Tillage Coulters)	37	6,145.00
25-VA19	6400439	Residue Manager - SharkTooth® Wheel 13-inch Steel Wheel with 12 Teeth (For Use without Tillage Coulters)		6,637.00
25-VA20	6400809	Floating Residue Manager - SharkTooth® Wheel with Depth Band, 13-inch Steel Wheel with 12 Teeth (For Use without Tillage Coulters)		8,996.00
25-VA11	6400542	Tillage Coulter without Blade (Order Coulter Blades from 9000 Series Dealer Installed Section)		4,362.00

ORDER CODE	CATALOG NUMBER	DESCRIPTION	APPROX. WEIGHT (lb.)	LIST PRICE

➢➢Factory Installed⮜⮜ COMBINATION RESIDUE MANAGER - Order 1 per Planter — Optional

Requires Factory Installed Row Unit Mounted Tillage Coulter (VA13, VA15, VA18 or VA11)
Recommend Heavy Duty Down Pressure Springs or Pneumatic Down Pressure

12-Row Planters

26-K102	6400597	Residue Manager Attachment . . . . . 10-inch Steel Wheel with 16 Fingers Includes Bearing Shields	4,608.00
26-K103	6400605	Residue Manager Attachment . . . . . 13-inch Steel Wheel with 16 Fingers Includes Bearing Shields	4,608.00
26-K104	6400613	Residue Manager Attachment . . . . . 13-inch Steel SharkTooth® Wheel with 12 Teeth	4,570.00
26-K101	6400589	Residue Manager without Spoke Wheels . . . . . (Order Wheels from 9000 Series Dealer Installed Section)	1,145.00

16-Row Planter

26-K102	6400598	Residue Manager Attachment . . . . . 10-inch Steel Wheel with 16 Fingers Includes Bearing Shields	6,145.00
26-K103	6400606	Residue Manager Attachment . . . . . 13-inch Steel Wheel with 16 Fingers Includes Bearing Shields	6,145.00
26-K104	6400614	Residue Manager Attachment . . . . . 13-inch Steel SharkTooth® Wheel with 12 Teeth	6,093.00
26-K101	6400590	Residue Manager without Spoke Wheels . . . . . (Order Wheels from 9000 Series Dealer Installed Section)	1,527.00

◆◆Dealer Installed◆◆ GRANULAR INSECTICIDE ATTACHMENT — Optional

Granular Insecticide Attachment - Order One Per Two Rows

NOTE: Not for use with Flex Shaft Seed Meter Drive or Row Unit Lock-up Option

	6001843	Granular Insecticide Kit with Brackets . . . . . For use with 2 Bushel Hoppers Only (Not for use with 3 Bushel Hoppers)	1,236.00

NOTE: Liquid Fertilizer Attachments are *NOT* available for these models.

RESERVED

9800 Narrow Transport Folding Planters

9800 Narrow Transport Folding Planters

F.O.B. Hesston, Kansas

STANDARD EQUIPMENT

- Cental Fill System with 90 Bushel, 2 Section, Central Seed Hopper and Seed Distribution System
- Hopper Version with 2 or 3 Bushel Individual Row Unit Seed Hoppers
- 7" x 7" Forward Folding Frame with Hydraulic Cylinders, Hoses and Frame Lock
- Hydraulic Lift with all Cylinders, Hoses, and Transport Lock-Up
- Planter Units with: Air Metering, Chain Drive Seed Meter, 16" Double Disc Openers, 4.5" x 16" Walking Beam Gauge Wheels
- Highway Transport Lighting
- Seed Drain Kit

Transport and Carrying Wheels / Tires
WP9812 - (6) 10:00-15 (TL) Load Range D
WP9816 - (8) 255/70R22.5, 16 Ply
WP9824 - (10) 255/70R22.5, 16 Ply

Requirements For 9812
Central Fill System
- 2 Tractor Remotes if Using 40 GPM PTO Pump and Reservoir
- 3 Tractor Remotes If Using Direct Drive

For 2 and 3 Bushel Hopper
- 3 Tractor Remotes if Using Direct Drive

Central Fill System (CFS) planters are designed for planting corn, soybeans, milo and popcorn. Large, Small, and Blank Seed Meter Screens are Included with CFS.

Ground Drive Planters:
- Central Blower, Manifold, Flow Control Valve and Air Pressure Gauge, Blower Inlet Screen

ISO Seed Monitoring

Hydraulic Drive Planters:
- Central Blower, Manifold, Couplers for Direct Drive, Flow Control Valve and Air Pressure Gauge (Uses Tractor Hyd.- Requires min. 30 GPM @ 2000psi with PTO Pump)
- Micro Processor Controlled Variable Rate Hydraulic Drive
- Half Width Disconnect (9816 and 9824)
- Seed Drive Disconnect - Implement Lift Switch
- ISO Control and Seed Monitoring

Requirements For 9816 and 9824
Central Fill System
- 3 Tractor Remotes if Using 14 GPM PTO Pump and Reservoir
- 4 Tractor Remotes If Using Direct Drive

For 2 and 3 Bushel Hopper
- 2 Tractor Remotes if Using 14 GPM PTO Pump and Reservoir
- 3 Tractor Remotes If Using Direct Drive

# Rows	Spacing	Frame	Wings	Transport Width	Transport Wheels	Total Wheels
12	30"	135"	10'	12'	4	6
16	30"	135"	14'	12'	4	8
24	30"	135"	24'	12'	4	10

Ordering Instructions:
Planters are now available with many items Factory Installed.
Factory Installed items are not eligible for return to the factory.

1. Select One Order Code from Base, and One Order Code from Each Group as Required.
2. Order Required Seed Discs from 9000 Series Dealer Installed Section.
3. Additional Dealer Installed Items can be Ordered for these Models from this Chapter and from 9000 Series Dealer Installed Section.
4. Accepts Row Unit Mounted Tillage Attachments Only.

ORDER CODE	CATALOG NUMBER	DESCRIPTION	APPROX. WEIGHT (lb.)	LIST PRICE
NARROW TRANSPORT FOLDING PLANTERS				
WP9812	9812901	12 Row 30-inch Planter		62,067.00
WP9816	9816902	16 Row 30-inch Planter	13000	71,884.00
WP9824	9824903	24 Row 30-inch Planter	19225	132,293.00

ORDER CODE	CATALOG NUMBER	DESCRIPTION	APPROX. WEIGHT (lb.)	LIST PRICE
➢➢Factory Installed⮜⮜		**MARKERS - Order One per Planter**		**Required**
Two Point Hitch for 12 Row				
2-P214	6400783	Bi-Fold Break-Away Markers with Notched Marker Discs . .		6,791.00
2-P202	6400782	Without Markers		No Charge
Two Point Hitch for 16 Row				
2-P214	6001659	Tri-Fold Break-Away Markers with Notched Marker Discs . .	1544	11,337.00
2-P202	6001660	Without Markers		No Charge
Two Point Hitch for 24 Row				
2-P204	6001699	Tri Fold Break-Away Markers with Notched Marker Discs . .	1544	13,380.00
2-P203	6001701	Without Markers		No Charge
Drawbar Hitch for 16 Row				
2-P215	6001661	Tri-Fold Break-Away Markers with Notched Marker Discs .	2950	14,832.00
2-P217	6001662	Without Markers		4,832.00
Drawbar Hitch for 24 Row				
2-P216	6001703	Tri Fold Break-Away Markers with Notched Marker Discs . .	2950	16,877.00
2-P218	6001705	Without Markers		5,543.00
◆◆Dealer Installed◆◆		**WEIGHT BRACKETS - Order One per Planter**		**Optional**
	6001488	Marker Weight Bracket (Set of 2), 9812 . . . . . Mounts Weights to Marker	53	160.00
	6001493	Weight Bracket (Set of 2), 9816, 9824 . . . . . To Add Weights for Without Markers Option	21	425.00
◆◆Dealer Installed◆◆		**WEIGHTS - Order One per Planter**		**Optional**
	6001451	Suitcase Weights (Set of 8 Weights). . . . . 125 lbs (55 kg) Each For use with 6001488 and 6001493 above	1000	1,500.00
➢➢Factory Installed⮜⮜		**CENTRAL FILL SYSTEM - Order One per Planter Includes Seed Meters and Mini-Hoppers**		**Required**
18-CF11	6401086	90 Bushel Central Fill System for 12 Row		23,999.00
18-CF11	6400820	90 Bushel Central Fill System for 16 Row		25,494.00
18-CF11	6400829	90 Bushel Central Fill System for 24 Row		27,408.00
18-CF10	6401085	No Central Fill System for 12 Row . . . . . (Order Seed Hopper on Next Page)		No Charge
18-CF10	6400174	No Central Fill System for 16 and 24 Row . . . . . (Order Seed Hopper on Next Page)		No Charge

ORDER CODE	CATALOG NUMBER	DESCRIPTION	APPROX. WEIGHT (lb.)	LIST PRICE
➢➢**Factory Installed**➣➣		**SEED HOPPERS AND METERS - Order One per Planter**		**Required**
12-Row Planter				
5-HO12	6400886	Set of 12 Two-Bushel Hoppers and Meters		9,510.00
5-HO13	6400887	Set of 12 Thee-Bushel Hoppers and Meters		11,152.00
5-HO10	6400903	Without Hoppers and Meters		No Charge
16-Row Planter				
5-HO12	6400799	Set of 16 Two-Bushel Hoppers and Meters		12,680.00
5-HO13	6400800	Set of 16 Three-Bushel Hoppers and Meters		14,869.00
5-HO10	6400802	Without Hoppers and Meters		No Charge
24-Row Planter				
5-HO12	6400835	Set of 24 Two-Bushel Hoppers and Meters		19,020.00
5-HO13	6400836	Set of 24 Three-Bushel Hoppers and Meters		22,305.00
5-HO10	6400834	Without Hoppers and Meters		No Charge

➢➢**Factory Installed**➣➣		**SEED METER DRIVE - Order One per Planter**		**Required**
12-Row Planter				
3-D702	6400389	Flex Shaft Drive (Includes Electric Clutch for Each Row)		6,900.00
3-D701	6400386	Chain Drive Without Auto Row Shut-Off		No Charge
16-Row Planter				
3-D702	6401029	Flex Shaft Drive (Includes Electric Clutch for Each Row)		9,200.00
3-D701	6400817	Chain Drive Without Auto Row Shut-Off		No Charge
24-Row Planter				
3-D702	6400828	Flex Shaft Drive (Includes Electric Clutch for Each Row)		13,800.00
3-D701	6400827	Chain Drive Without Auto Row Shut-Off		No Charge

Notes on Ordering Flex Shaft
- Requires: 6001400 Communication Module below.
- To Add Auto Row Shut-Off Feature, Order 6001396 C3000 Terminal / Monitor and 10 Hz or Stronger GPS Receiver
- Flex Shaft is Not Compatible with Section Control Half-Width Shut-Off or Standard Duty Down Pressure Springs

◆◆**Dealer Installed**◆◆		**Communication Module Required to Operate Flex Shaft Above**		**Optional**
	6001400	Communication Module with 6 Programmable Toggle Switches for use with Flex Shaft Seed Meter Drive. Six Toggle Switches Provide Manual Control for Six Sections		509.00

Note: The programmable communication module with toggle switches also provides manual back-up when using the Auto Row Shut-Off feature of the C3000 Terminal / Monitor if GPS signal is lost.

ORDER CODE	CATALOG NUMBER	DESCRIPTION	APPROX. WEIGHT (lb.)	LIST PRICE
➢➢Factory Installed⮜⮜		**DRIVE - Order One per Planter**		**Required**
20-DO11	6401082	Hydraulic Drive, 12 Row		1,803.00
20-DO10	6401081	Ground Drive, 12 Row		No Charge
20-DO11	6400826	Hydraulic Drive, 16 Row		5,424.00
20-DO12	6400450	Dual Ground Drive, 16 Row		1,590.00
20-DO10	6400447	Ground Drive, 16 Row		No Charge
20-DO11	6400830	Hydraulic Drive, 24 Row		5,424.00
20-DO12	6400449	Dual Ground Drive, 24 Row		1,590.00
20-DO10	6400448	Ground Drive, 24 Row		No Charge

Notes on Ordering Hydraulic Drive: Also Requires Radar Distance Sensing or Radar "Y" Harness from page 67

Notes on Ordering Dual Ground Drive: Fertilizer Attachments are not Available with Dual Ground Drive

Note: Model 9812: Seed Meter Blower Mounted Oil Coolers not Provided.
Models 9816 and 9824: Seed Meter Blower Mounted Oil Coolers not Provided with Ground Drive, Direct Drive and Hoses.

➢➢Factory Installed⮜⮜		**HYDRAULIC SUPPLY SYSTEM - Order One per Planter** **(Also Order from PTO Pump Adapter Group as Required)**		**Required**
9812 With Hydraulic Drive, With CFS				
21-P801	6401084	40 GPM PTO Pump with 25 Gallon Reservoir and 1-3/8 inch PTO Spline Shaft (Does not Require PTO Pump Adaptor)		4,368.00
21-P812	6401087	Direct Drive and Hoses (Uses Existing Tractor Hydraulics)	30	250.00
9812 With Ground Drive, With CFS				
21-P812	6401087	Direct Drive and Hoses (Uses Existing Tractor Hydraulics)	30	250.00
9812 With Ground Drive or Hydraulic Drive, Without CFS				
21-P802	6401083	Direct Drive and Hoses (Uses Existing Tractor Hydraulics)	30	250.00
9816 and 9824 With Hydraulic Drive				
21-P801	6400193	14 GPM PTO Pump with 8.5 Gallon Reservoir **(For Use with 2-Point Hitch)** (Requires PTO Pump Adapter Below)		2,067.00
21-P807	6400231	14 GPM PTO Pump with 8.5 Gallon Reservoir **(For Use with Drawbar)** (Requires PTO Pump Adapter Below)	100	2,067.00
9816 and 9824 With Hydraulic, Ground or Dual Ground Drive				
21-P802	6400199	Direct Drive and Hoses (without oil coolers) (Uses Existing Tractor Hydraulics)	30	148.00

◆◆Dealer Installed◆◆		**PTO PUMP ADAPTER - Order One per Planter**	**Required**
	6000747	1000 RPM PTO Pump Adapter for 1-3/4 in Shaft (For use with 21-P801 or 21-P807 on 9816 and 9824)	167.00
	6000748	1000 RPM PTO Pump Adapter for 1-3/8 in Shaft (For use with 21-P801 or 21-P807 on 9816 and 9824)	167.00
	6000777	Without PTO Pump Adapter (For Use with 21-P812 and 21-P802)	No Charge

ORDER CODE	CATALOG NUMBER	DESCRIPTION	APPROX. WEIGHT (lb.)	LIST PRICE
➢➢Factory Installed⮜⮜		**SEED TUBES AND SENSORS - Order One per Planter**		**Required**
12-Row Planter				
16-P301	6400884	Seed Tubes with High Rate Sensors.		2,202.00
16-P303	6400885	Seed Tubes with Seed Smart Sensors.		3,615.00
16-Row Planter				
16-P301	6400814	Seed Tubes with High Rate Sensors.		2,937.00
16-P303	6400815	Seed Tubes with Seed Smart Sensors.		4,820.00
24-Row Planter				
16-P301	6400832	Seed Tubes with High Rate Sensors.		4,405.00
16-P303	6400833	Seed Tubes with Seed Smart Sensors.		7,231.00

➢➢Factory Installed⮜⮜		**CLOSING SYSTEM - Order One per Planter**		**Required**

NOTE: Angled Closing Wheels are factory installed in the staggered position with the left wheel forward and with two spacers under the wheels.

12-Row Planter				
12-LR11	6400890	Angled Bracket with Rubber Closing Wheels	19	3,451.00
12-LR12	6400891	Angled Bracket with Cast Closing Wheels	54	3,972.00
12-LR13	6400892	Angled Bracket Without Closing Wheels. . . . . (Order Closing Wheels from 9000 Series Dealer Installed Section)		1,948.00
12-LR10	6400803	Without Closing Wheels		No Charge
16-Row Planter				
12-LR11	6400804	Angled Bracket with Rubber Closing Wheels	19	4,600.00
12-LR12	6400807	Angled Bracket with Cast Closing Wheels	54	5,296.00
12-LR13	6400806	Angled Bracket Without Closing Wheels. . . . . (Order Closing Wheels from 9000 Series Dealer Installed Section)		2,597.00
12-LR10	6400803	Without Closing Wheels		No Charge
24-Row Planter				
12-LR11	6400838	Angled Bracket with Rubber Closing Wheels	19	6,900.00
12-LR12	6400839	Angled Bracket with Cast Closing Wheels	54	7,944.00
12-LR13	6400840	Angled Bracket Without Closing Wheels. . . . . (Order Closing Wheels from 9000 Series Dealer Installed Section)		3,895.00
12-LR10	6400803	Without Closing Wheels		No Charge

◆◆Dealer Installed◆◆		**MONITOR SYSTEM - Order One per Planter**	**Required**

Requires 6000923 Radar Ground Speed and Distance Sensing Gun or 6100064 Radar "Y" Harness.
For Use on Tractor with Radar.
If Tractor is Equipped with an Integrated C1000 Terminal / Monitor, Order 6000993

6001396	C3000 Terminal / Monitor	5,299.00
6001313	C1000 Terminal / Monitor	2,803.00
6000993	Without Monitor (Order only if Tractor is Equipped with an Existing ISO Terminal / Monitor)	No Charge

NOTE: C3000 Terminal / Monitor required with Flex Shaft Seed Meter Drive

ORDER CODE	CATALOG NUMBER	DESCRIPTION	APPROX. WEIGHT (lb.)	LIST PRICE
◆◆Dealer Installed◆◆		**GROUND SPEED SENSOR - Order One per Planter**		**Required**
	6000923	Radar Ground Speed and Distance Sensing Gun	15	1,049.00
	6100064	Radar "Y" Harness . . . . . (4 pin round tractor connector to 4 pin round monitor connector)		152.00
	6000810	Without Ground Speed and Distance Sensing . . . . . (For Use with 6000100)		No Charge

Note: Part # 72515753 - Radar "Y" Harness
(4 pin flat tractor connector to a 4 pin round monitor connector)
(Above Two "Y" Harnesses for tractors equipped with Radar Speed Sensing)

➢➢Factory Installed⮜⮜		**SECTION CONTROL SHUT-OFF - Order One per Planter** **Not for use with Automatic Row Shut-Off** **Section Clutch Control incorporated in the Frame Fold Control Console**		**Required**
32-7P01	6400390	Without Section Control Half-Width Shut-Off, 9812		No Charge
32-7P01	6400175	Without Section Control Half-Width Shut-Off, 9816 and 9824, For use with Ground Drive		No Charge
32-7P01	6401091	Without Section Control Half-Width Shut-Off, 9816 and 9824, For use with Hydraulic Drive		No Charge
32-7P02	6400391	Section Control Half-Width Shut-Off, 9812. . . . . For use with Ground or Hydraulic Drive (Includes 2 Clutches)	20	2,228.00
32-7P02	6400176	Section Control Half-Width Shut-Off, 9816. . . . . For use with Ground Drive Only (Includes 2 Clutches)	20	2,228.00
32-7P02	6400198	Section Control Half-Width Shut-Off, 9824. . . . . For use with Ground Drive Only (Includes 2 Clutches)	20	2,228.00

➢➢Factory Installed⮜⮜		**DRIVE WHEEL MUD SCRAPERS - Order One per Planter**		**Optional**
Drive Wheel Mud Scrapers have a maximum Quantity of 6 on the WP9812, 8 on the WP9816 and 10 on the WP9824				
15-PH01	6400674	Drive Wheel Mud Scrapers (Set of 2) for 9812.	30	369.00
15-PH01	6400780	Drive Wheel Mud Scrapers (Set of 2) for 9816 and 9824 . .	30	369.00
15-PH03	6400881	Drive Wheel Mud Scrapers (Set of 6) for 9812.	90	1,107.00
15-PH04	6400781	Drive Wheel Mud Scrapers (Set of 8) for 9816 and 9824 . .	120	1,477.00

For Additional Scrapers, Order 6001447 or 6001230 Below

◆◆Dealer Installed◆◆		**DRIVE WHEEL MUD SCRAPER - Order One for Each Wheel as Desired**	
Drive Wheel Mud Scrapers have a maximum Quantity of 6 on the WP9812, 8 on the WP9816 and 10 on the WP9824			
	6001447	Drive Wheel Mud Scraper, 9812, Quantity 1.	184.00
	6001230	Drive Wheel Mud Scraper, 9816 and 9824, Quantity 1 . . .	184.00

ORDER CODE	CATALOG NUMBER	DESCRIPTION	APPROX. WEIGHT (lb.)	LIST PRICE
➢➢Factory Installed⮜⮜		**ADDITIONAL EQUIPMENT - Order One per Planter**		**Optional**
33-BZ01	6400779	Blower Inlet Screen, 9816 and 9824 (Hydraulic Drive Only) .		198.00
7-PS01	6400902	Row Unit Gauge Wheel Scrapers, 9812		420.00
7-PS01	6400816	Row Unit Gauge Wheel Scrapers, 9816		560.00
7-PS01	6400851	Row Unit Gauge Wheel Scrapers, 9824		840.00
	71428520W	Ship Safe Preservative Coating . . . . . *(Recommended for Protection when Shipped in Winter Months)*		586.00
◆◆Dealer Installed◆◆		**ADDITIONAL EQUIPMENT - Order One per Planter**		**Optional**
	6001306	Dual Ground Drive Transmission for 9816 or 9824		1,590.00
➢➢Factory Installed⮜⮜		**DOWN PRESSURE SYSTEM - Order One per Planter**		**Required**
12-Row Planter				
23-KB14	6400395	Pneumatic Down Pressure System . . . . . Requires 6001466 Compressor Below	240	2,688.00
23-KB12	6400895	Heavy Duty Down Pressure Springs		2,432.00
23-KB11	6400894	Standard Duty Down Pressure Springs		789.00
23-KB10	6400027	Without Down Pressure Springs		No Charge
16-Row Planter				
23-KB14	6400819	Pneumatic Down Pressure System . . . . . Requires 6001466 Compressor Below	340	3,584.00
23-KB12	6400811	Heavy Duty Down Pressure Springs	12	3,242.00
23-KB11	6400812	Standard Duty Down Pressure Springs	7	1,053.00
23-KB10	6400027	Without Down Pressure Springs		No Charge
24-Row Planter				
23-KB14	6400844	Pneumatic Down Pressure System . . . . . Requires 6001466 Compressor Below	500	5,302.00
23-KB12	6400843	Heavy Duty Down Pressure Springs	12	4,864.00
23-KB11	6400842	Standard Duty Down Pressure Springs	7	1,579.00
23-KB10	6400027	Without Down Pressure Springs		No Charge

Notes: Standard Duty Down Pressure Springs are Not Compatible with Row Unit Mounted Attachments or Flex Shaft Drive.

◆◆Dealer Installed◆◆		**COMPRESSOR - Order One per Planter**		**Optional**
	6001466	Pneumatic Down Pressure Compressor . . . . . (Required with Factory Installed Only Pneumatic Down Pressure)	20	844.00

ORDER CODE	CATALOG NUMBER	DESCRIPTION	APPROX. WEIGHT (lb.)	LIST PRICE

➢➢Factory Installed⮜⮜ ROW UNIT MOUNTED TILLAGE - Order One per Planter — Required

Heavy Duty Down Pressure Springs or Pneumatic Down Pressure Recommended

12-Row Planter

25-VA10	6400021	Without Unit Mounted Tillage Attachment		No Charge
25-VA13	6400557	Tillage Coulter with Ripple Blade		3,793.00
25-VA15	6400573	Tillage Coulter with 13 Flute Blade		3,793.00
25-VA18	6400581	Tillage Coulter with 25 Flute Blade		3,793.00
25-VA16	6400896	Residue Manager - Finger Wheel 13-inch Steel Wheel with 16 Fingers (For use without Tillage Coulters)		4,608.00
25-VA19	6400897	Residue Manager - SharkTooth® Wheel 13-inch Steel Wheel with 12 Teeth (For Use without Tillage Coulters)		4,978.00
25-VA20	6400898	Floating Residue Manager - SharkTooth® Wheel with Depth Band, 13-inch Steel Wheel with 12 Teeth (For Use without Tillage Coulters)		6,748.00
25-VA11	6400541	Tillage Coulter without Blade (Order Coulter Blades from 9000 Series Dealer Installed Section)		3,272.00

16-Row Planter

25-VA10	6400021	Without Unit Mounted Tillage Attachment		No Charge
25-VA13	6400558	Tillage Coulter with Ripple Blade	41	5,058.00
25-VA15	6400574	Tillage Coulter with 13 Flute Blade	37	5,058.00
25-VA18	6400582	Tillage Coulter with 25 Flute Blade		5,058.00
25-VA16	6400424	Residue Manager - Finger Wheel 13-inch Steel Wheel with 16 Fingers (For Use without Tillage Coulters)	37	6,145.00
25-VA19	6400439	Residue Manager - SharkTooth® Wheel 13-inch Steel Wheel with 12 Teeth (For Use without Tillage Coulters)		6,637.00
25-VA20	6400809	Floating Residue Manager - SharkTooth® Wheel with Depth Band, 13-inch Steel Wheel with 12 Teeth (For Use without Tillage Coulters)		8,996.00
25-VA11	6400542	Tillage Coulter without Blade (Order Coulter Blades from 9000 Series Dealer Installed Section)		4,362.00

24-Row Planter

25-VA10	6400021	Without Unit Mounted Tillage Attachment		No Charge
25-VA13	6400560	Tillage Coulter with Ripple Blade	41	7,588.00
25-VA15	6400576	Tillage Coulter with 13 Flute Blade	37	7,588.00
25-VA18	6400584	Tillage Coulter with 25 Flute Blade		7,588.00
25-VA16	6400845	Residue Manager - Finger Wheel 13-inch Steel Wheel with 16 Fingers (For use without Tillage Coulters)	37	9,217.00
25-VA19	6400846	Residue Manager - SharkTooth® Wheel 13-inch Steel Wheel with 12 Teeth (For Use without Tillage Coulters)		9,956.00
25-VA20	6400847	Floating Residue Manager - SharkTooth® Wheel with Depth Band, 13-inch Steel Wheel with 12 Teeth (For Use without Tillage Coulters)		13,495.00
25-VA11	6400544	Tillage Coulter without Blade (Order Coulter Blades from 9000 Series Dealer Installed Section)		6,544.00

ORDER CODE	CATALOG NUMBER	DESCRIPTION	APPROX. WEIGHT (lb.)	LIST PRICE

➢➢Factory Installed⮜⮜ COMBINATION RESIDUE MANAGER - Order 1 per Planter — Optional

Requires Factory Installed Row Unit Mounted Tillage Coulter (VA13, VA15, VA18 or VA11)
Recommend Heavy Duty Down Pressure Springs or Pneumatic Down Pressure.

12-Row Planter

26-K102	6400597	Residue Manager Attachment . . . . . 10-inch Steel Wheel with 16 Fingers and Bearing Shields	4,608.00
26-K103	6400605	Residue Manager Attachment . . . . . 13-inch Steel Wheel with 16 Fingers and Bearing Shields	4,608.00
26-K104	6400613	Residue Manager Attachment . . . . . 13-inch Steel SharkTooth® Wheel with 12 Teeth	4,570.00
26-K101	6400589	Residue Manager without Spoke Wheels . . . . . (Order Wheels from 9000 Series Dealer Installed Section)	1,145.00

16-Row Planter

26-K102	6400598	Residue Manager Attachment . . . . . 10-inch Steel Wheel with 16 Fingers and Bearing Shields	6,145.00
26-K103	6400606	Residue Manager Attachment . . . . . 13-inch Steel Wheel with 16 Fingers and Bearing Shields	6,145.00
26-K104	6400614	Residue Manager Attachment . . . . . 13-inch Steel SharkTooth® Wheel with 12 Teeth	6,093.00
26-K101	6400590	Residue Manager without Spoke Wheels . . . . . (Order Wheels from 9000 Series Dealer Installed Section)	1,527.00

24-Row Planter

26-K102	6400600	Residue Manager Attachment . . . . . 10-inch Steel Wheel with 16 Fingers and Bearing Shields	9,217.00
26-K103	6400608	Residue Manager Attachment . . . . . 13-inch Steel Wheel with 16 Fingers and Bearing Shields	9,217.00
26-K104	6400616	Residue Manager Attachment . . . . . 13-inch Steel SharkTooth® Wheel with 12 Teeth	9,140.00
26-K101	6400592	Residue Manager without Spoke Wheels . . . . . (Order Wheels from 9000 Series Dealer Installed Section)	2,292.00

◆◆Dealer Installed◆◆ GRANULAR INSECTICIDE ATTACHMENT — Optional

Granular Insecticide Attachment - Order One Per Two Rows

NOTE: Not for use with Flex Shaft Seed Meter Drive or Row Unit Lock-up Option

	6001843	Granular Insecticide Kit with Brackets . . . . . For use with 2 Bushel Hoppers Only (Not for use with 3 Bushel Hoppers)	1,236.00
	6001844	Granular Insecticide Kit with Brackets . . . . . For use with CFS Mini-Hoppers Only (Not for use with 2 or 3 Bushel Hoppers)	1,236.00

ORDER CODE	CATALOG NUMBER	DESCRIPTION	APPROX. WEIGHT (lb.)	LIST PRICE

➢➢Factory Installed➣➣ LIQUID FERTILIZER TANK PACKAGES - Order One per Planter — Optional

Factory Installed Items Are Not Eligible for Return to the Factory

Liquid Fertilizer Attachment (Without Openers)

How To Order Factory Installed Liquid Fertilizer Attachment

(Opener Hose is Dealer Installed)

1. Order 1 Liquid Fertilizer Package. Tanks Include Mounting Brackets.
2. Order Rear Tow Hitch.
3. Order Fertilizer Openers as desired. See page 73
4. Order Opener Hose (Dealer Installed).

Note: 300 Gallon Liquid Fertilizer Tank is for use with 9812 CFS Only.
Note: 750 Gallon Liquid Fertilizer Tank is for use with 2 and 3 Bushel Hoppers Only.

9812

35-UN10	6400930	Without Liquid Fertilizer Tank Package	No Charge
35-UN08	6400404	300 Gallon (1136 L) Liquid Fertilizer Tank	2,749.00
35-UN11	6400404	300 Gallon (1136 L) Liquid Fertilizer Tank	2,749.00
	6400397	Single Piston Pump and Contact Wheel Fertilizer Drive	6,052.00
	6400401	Tank Plumbing Package	789.00
	6400882	Outlet Manifold with Orifices	872.00
35-UN14	6400404	300 Gallon (1136 L) Liquid Fertilizer Tank	2,749.00
	6400397	Single Piston Pump and Contact Wheel Fertilizer Drive	6,052.00
	6400401	Tank Plumbing Package	789.00
	6400883	Flow Divider	1,958.00
35-UN02	6400208	750 Gallon (2839 L) Liquid Fertilizer Tank	4,080.00
35-UN12	6400208	750 Gallon (2839 L) Liquid Fertilizer Tank	4,080.00
	6400397	Single Piston Pump and Contact Wheel Fertilizer Drive	6,052.00
	6400398	Tank Plumbing Package	899.00
	6400882	Outlet Manifold with Orifices	872.00
35-UN15	6400208	750 Gallon (2839 L) Liquid Fertilizer Tank	4,080.00
	6400397	Single Piston Pump and Contact Wheel Fertilizer Drive	6,052.00
	6400398	Tank Plumbing Package	899.00
	6400883	Flow Divider	1,958.00
35-UN17	6400397	Single Piston Pump and Contact Wheel Fertilizer Drive	6,052.00
	6400882	Outlet Manifold with Orifices	872.00
35-UN19	6400397	Single Piston Pump and Contact Wheel Fertilizer Drive	6,052.00
	6400883	Flow Divider	1,958.00

➢➢Factory Installed➣➣ REAR TOW HITCH - Order One per Planter — Required

12-Row Planter

31-P700	6400266	Without Tow Hitch for 90 Bushel CFS	25	No Charge
31-P711	6400445	Rear Tow Hitch with Fertilizer Plumbing for 2 and 3 Bushel Hoppers as well as 90 Bushel CFS		1,708.00

Note: Rear Tow Hitch is for towing up to 2,000 gallon (7570L) Liquid Fertilizer Tank

ORDER CODE	CATALOG NUMBER	DESCRIPTION	APPROX. WEIGHT (lb.)	LIST PRICE

➢➢Factory Installed⮜⮜ LIQUID FERTILIZER TANK PACKAGES Continued

9816

35-UN10	6400336	Without Liquid Fertilizer Tank Package		No Charge
35-UN02	6400208	750 Gallon (2839 L) Liquid Fertilizer Tank		4,080.00
35-UN12	6400208	750 Gallon (2839 L) Liquid Fertilizer Tank		4,080.00
	6400242	Single Piston Pump		4,072.00
	6400241	Contact Wheel Drive		1,880.00
	6400210	Plumbing Kit for On-Board Liquid Fertilizer		802.00
	6400214	Pump Plumbing Package		256.00
	6400212	Outlet Manifold with Orifices		1,273.00
35-UN15	6400208	750 Gallon (2839 L) Liquid Fertilizer Tank		4,080.00
	6400242	Single Piston Pump		4,072.00
	6400241	Contact Wheel Drive		1,880.00
	6400210	Plumbing Kit for On-Board Liquid Fertilizer		802.00
	6400214	Pump Plumbing Package		256.00
	6400213	Flow Divider		2,865.00
35-UN19	6400242	Single Piston Pump		4,072.00
	6400241	Contact Wheel Drive		1,880.00
	6400211	Plumbing Kit for Tow Behind Liquid Fertilizer		393.00
	6400214	Pump Plumbing Package		256.00
	6400213	Flow Divider		2,865.00

9824

35-UN10	6400336	Without Liquid Fertilizer Tank Package		No Charge
35-UN02	6400208	750 Gallon (2839 L) Liquid Fertilizer Tank		4,080.00
35-UN13	6400208	750 Gallon (2839 L) Liquid Fertilizer Tank		4,080.00
	6400243	Double Piston Pump		5,095.00
	6400241	Contact Wheel Drive		1,880.00
	6400245	Plumbing Kit for On-Board Liquid Fertilizer		843.00
	6400244	Pump Plumbing Package		500.00
	6400215	Outlet Manifold with Orifices		1,910.00
35-UN16	6400208	750 Gallon (2839 L) Liquid Fertilizer Tank		4,080.00
	6400243	Double Piston Pump		5,095.00
	6400241	Contact Wheel Drive		1,880.00
	6400245	Plumbing Kit for On-Board Liquid Fertilizer		843.00
	6400244	Pump Plumbing Package		500.00
	6400216	Flow Divider		3,917.00
35-UN20	6400243	Double Piston Pump		5,095.00
	6400241	Contact Wheel Drive		1,880.00
	6400246	Plumbing Kit for Tow Behind		393.00
	6400244	Pump Plumbing Package		500.00
	6400216	Flow Divider		3,917.00

➢➢Factory Installed⮜⮜ REAR TOW HITCH - Order One per Planter Required

16 Row and 24-Row Planters

31-P710	6400267	Without Tow Hitch for 2 and 3 Bushel Hoppers		No Charge
31-P700	6400266	Without Tow Hitch for 90 Bushel CFS	25	No Charge
31-P708	6400207	Rear Tow Hitch for 2 and 3 Bushel Hoppers	270	1,314.00
31-P709	6400268	Rear Tow Hitch for 90 Bushel CFS		1,314.00

Note: Rear Tow Hitch is for towing up to 2,000 gallon (7570L) Liquid Fertilizer Tank

ORDER CODE	CATALOG NUMBER	DESCRIPTION	APPROX. WEIGHT (lb.)	LIST PRICE

➢➢Factory Installed⮜⮜ FERTILIZER OPENER PACKAGES — Optional

Fertilizer Openers - Includes Mounting Brackets - Order One Per Planter

12-Row Planter

19-K202	6400906	Single Disc Fertilizer Openers - Liquid Side Knife	9,847.00
19-K201	6400907	Double Disc Fertilizer Openers	6,766.00

16-Row Planter

19-K202	6400775	Single Disc Fertilizer Openers - Liquid Side Knife	13,129.00
19-K201	6400772	Double Disc Fertilizer Openers	9,022.00

24-Row Planter

19-K202	6400776	Single Disc Fertilizer Openers - Liquid Side Knife	19,695.00
19-K201	6400773	Double Disc Fertilizer Openers	13,533.00

Note: Single Disc Side Knife Fertilizer Opener is Not for Use with Row Unit Mounted Tillage Coulter/ Residue Manager Combo.

◆◆Dealer Installed◆◆Liquid Fertilizer Opener Hose

	6100200	Roll of Fertilizer Opener Hose, 3/8 inch x 48 Feet . . . . . (Order 4 Rolls for 9812, 6 Rolls for 9816, and 8 Rolls for 9824)	92.00

ORDER CODE	CATALOG NUMBER	DESCRIPTION	APPROX. WEIGHT (lb.)	LIST PRICE

◆◆Dealer Installed◆◆ Liquid Fertilizer Attachment - Order One per Planter or See Item for Order Quantity — Optional

How To Order Dealer Installed Liquid Fertilizer Attachment:

1. Order 1 Liquid Fertilizer Tank (Includes Brackets).
2. Order Rear Tow Hitch if desired
3. Order Tank Plumbing Kit if desired
4. Order Single or Double Piston Pump and Contact Wheel Drive
5. Order Pump Plumbing Package
6. Order Flow Divider or Outlet Manifold
7. Order Opener Hose
8. Order Fertilizer Openers and Mounting Brackets if desired. See page 75

Liquid Fertilizer Tanks and Mounting Brackets

6001394	300 Gallon (1136 L) Liquid Fertilizer Tank , 9812		2,749.00
6001207	750 Gallon (2839 L) Liquid Fertilizer Tank		4,080.00

Rear Tow Hitch - For Towing up to 2,000 Gallon (7570 L) Liquid Fertilizer Tank

6001393	Rear Tow Hitch for 9812 with Tow-Behind Liquid Fertilizer Plumbing		1,708.00
6001228	Rear Tow Hitch for 9816 and 9824	280	1,314.00

Tank Plumbing Kit - Includes Hoses and Fittings

6001465	Tank Plumbing Kit For 300 Gallon, 9812		789.00
6001395	Tank Plumbing Kit For 750 Gallon, 9812		899.00
6001218	Tank Plumbing Kit For 750 Gallon, 9816 and 9824	50	882.00
6001219	Tank Plumbing Kit For Tow-Behind Liquid Fertilizer Tank, 9816, 9824	30	393.00

Fertilizer Pumps and Drives

6001446	Single Piston Pump and Contact Wheel Drive, 9812		3,961.00
6001308	Single Piston Pump and Contact Wheel Drive, 9816	65	4,072.00
6001309	Double Piston Pump and Contact Wheel Drive, 9824	110	5,095.00
6001463	Contact Wheel Drive without Pump, 9812	115	1,976.00
6001307	Contact Wheel Drive without Pump, 9816 and 9824	115	1,976.00

Fertilizer Drive Lock-Up

6001487	Fertilizer Drive Lock-Up, 9812		151.00

Pump Plumbing Kit - Single or Double Piston Pumps

Piston Pump Plumbing Kit requires Flow Divider or Outlet Manifold

(Includes Fittings and Hose to Flow Divider or Outlet Manifold)

6001086	Piston Pump Plumbing Kit, 9816	5	256.00
6001220	Piston Pump Plumbing Kit, 9824	15	499.00

Flow Divider or Outlet Manifold Completing Package - Required for Piston Pump Only

6001454	12 Row Flow Divider (for use with 9812)		1,958.00
6000647	16 Row Flow Divider		2,865.00
6100199	12 Row Flow Divider (for use with 9824; Order Quantity 2)		1,958.00
6100219	16 Row Outlet Manifold (with Orifices and Check Valves)		1,484.00
6100195	12 Row Outlet Manifold (with Orifices and Check Valves) (Order Quantity 1 for 12 Row; Quantity 2 for 24 Row)		872.00

Liquid Fertilizer Opener Hose

6100200	Roll of Fertilizer Opener Hose, 3/8 inch x 48 Feet (Order 4 Rolls for 9812, 6 Rolls for 9816, and 8 Rolls for 9824)		92.00

ORDER CODE	CATALOG NUMBER	DESCRIPTION	APPROX. WEIGHT (lb.)	LIST PRICE

◆◆Dealer Installed◆◆ Liquid Fertilizer Attachment — Optional

Fertilizer Openers for Liquid Fertilizer - Order One per Two Row Units

6000527	Single Disc Fertilizer Opener - Liquid Side Knife		1,293.00
6001486	Double Disc Opener - 13-1/2 inch Diameter, 9812.	75	803.00
6100459	Double Disc Opener - 13-1/2 inch Diameter, 9816 and 9824	75	803.00

Note: Single Disc Fertilizer Openers can not be used with Tillage/Coulter Residue Manager Combination

Fertilizer Opener Mounting Brackets - Order One per Planter
(For use with Double Disc or Side Knife Fertilizer Openers Only)

6001484	Fertilizer Opener Mounting Brackets for Double Disc, 9812 . .		3,378.00
6001485	Fertilizer Opener Mounting Brackets for Single Disc, 9812. . .		3,378.00
6001215	Fertilizer Opener Mounting Brackets, 9816	340	3,097.00
6001216	Fertilizer Opener Mounting Brackets, 9824		4,705.00
6001068	Offset Shank Set for Single Disc Fertilizer Openers . . . . . 9816 and 9824 only **Order One per Four Rows** (Required to Mount Liquid Side Knife)	101	240.00

RESERVED

9831 Narrow Transport, Narrow Row Folding Planter

WHITE PLANTERS

9831 Narrow Transport, Narrow Row Folding Planter with Central Fill System

F.O.B. Hesston, Kansas

STANDARD EQUIPMENT

- 90 Bushel, 2 Section, Central Seed Hopper and Seed Distribution System
- 7" x 7" Two Section Forward Folding Frame (Three Section Flex in Planting Position)
- Hydraulic Frame Cylinders, Hoses, and Frame Transport Locks
- Planter Units with: Cover and Meter Assembly with Exclusive "Edge Drop" Air Metering, 16" Double Disc Openers, 4.5"x 16" Walking Beam Gauge Wheels
- Chain Drive
- Hi-Flotation Tires on Transport Wheels, (4) 32x15.5-16.5, 14 Ply
- Hi-Flotation Tires on Wings, (2) 31.5 x 15.5-15, 8 Ply
- Highway Transport Lighting and Marking
- Highway Transport Chain
- 1-1/2" Seed Delivery Hoses
- Split Rows Include Row Unit Lock-Ups
- Hydraulic Variable Rate Drive
- CFS Blower: 13" Diameter Fan, 12cc Piston Type Orbit Motor
- Two Seed Metering Blowers, Flow Control Valve, Air Pressure Gauges, Air Manifold and Flex Hoses
- Requires 3 Tractor Remotes if Using 10 GPM PTO Pump with 6.4 Gallon Reservoir (1 for Lift System, 1 for Frame Fold and Markers, and 1 for Central Fill Blower)
- Requires 4 Tractor Remotes if Using Direct Drive (1 for Seed Metering Blowers and Hydraulic Drive Motor, 1 for Lift System, 1 for Frame Fold and Markers, and 1 for Central Fill Blower)

Model 9831 Central Fill System (CFS) planter is designed for planting corn, soybeans, milo, popcorn, and wheat.

# Rows	Spacing	Center Frame	Wings	Transport Width	Transport Height	Storage Length
31	15"	194"	134"	155" (3.94m)	152" (3.86m)	29' (8.84m)

Ordering Instructions:
Planters are now available with many items Factory Installed.
Factory Installed items are not eligible for return to the factory.

1. Select One Order Code from Base, and One Order Code from Each Group as Required.
2. Order Required Seed Discs from 9000 Series Dealer Installed Section.
3. Additional Dealer Installed Items can be Ordered for these Models from this Chapter and from 9000 Series Dealer Installed Section.
4. Accepts Row Unit Mounted Tillage Attachments Only.
5. If Row Unit Mounted Tillage Coulter and Residue Manager combo are used on 30" Row Spacing, Row #1 and #16 accept 10" Residue Wheels only. Tillage Coulter / Residue Manager combo is not adaptable for 15" Row Spacing.

ORDER CODE	CATALOG NUMBER	DESCRIPTION	APPROX. WEIGHT (lb.)	LIST PRICE
NARROW TRANSPORT, NARROW ROW FOLDING PLANTER				
WP9831	9831901	31 Row 15-inch Planter	22000	149,453.00

ORDER CODE	CATALOG NUMBER	DESCRIPTION	APPROX. WEIGHT (lb.)	LIST PRICE
➢➢Factory Installed⮜⮜		**MARKERS - Order One per Planter**		**Required**
2-P214	6400121	Tri-Fold Break-Away Markers . . . . . with Gauge Wheel and Notched Discs	2167	11,492.00
2-P210	6000841	Without Markers		No Charge
➢➢Factory Installed⮜⮜		**HYDRAULIC SUPPLY SYSTEM - Order One per Planter** **(Also Order from PTO Pump Adapter Group below)**		**Required**
21-P801	6400055	10 GPM PTO Pump with 6.4 Gallon Reservoir		2,067.00
21-P802	6400061	Direct Drive and Hoses . . . . . (Uses Existing Tractor Hydraulics)	30	148.00
◆◆Dealer Installed◆◆		**PTO PUMP ADAPTER - Order One per Planter**		**Required**
	6000747	1000 RPM PTO Pump Adapter for 1-3/4 inch Shaft		167.00
	6000748	1000 RPM PTO Pump Adapter for 1-3/8 inch Shaft		167.00
	6000777	Without PTO Pump Adapter (For Use with 21-P802)		No Charge
➢➢Factory Installed⮜⮜		**SEED TUBES AND SENSORS - Order One per Planter**		**Required**
16-P301	6401048	Seed Tubes with High Rate Sensors.		5,690.00
16-P303	6401049	Seed Tubes with Seed Smart Sensors.		9,340.00
➢➢Factory Installed⮜⮜		**SEED DELIVERY HOSES - Order One per Planter**		**Required**
11-P010	6401170	Without Split Row Seed Block-Off Manifold . . . . . (Restricts Planter to 15-inch Row Spacing for Soybeans)		No Charge
11-P011	6401171	Split Row Seed Block-Off Manifold. . . . . (Plant 30-inch Rows and Block-Off Split Rows)		354.00
➢➢Factory Installed⮜⮜		**CLOSING SYSTEM - Order One per Planter**		**Required**
NOTE: Angled Closing Wheels are factory installed in the staggered position with the left wheel forward and with two spacers under the wheels.				
12-LR11	6401052	Angled Bracket with Rubber Closing Wheels	19	8,913.00
12-LR12	6401053	Angled Bracket with Cast Closing Wheels	54	10,261.00
12-LR13	6401054	Angled Bracket Without Closing Wheels. . . . . (Order Closing Wheels from 9000 Series Dealer Installed Section)		5,032.00
12-LR10	6400803	Without Closing Wheels		No Charge

ORDER CODE	CATALOG NUMBER	DESCRIPTION	APPROX. WEIGHT (lb.)	LIST PRICE
◆◆Dealer Installed◆◆		**MONITOR SYSTEM - Order One per Planter**		**Required**
		Requires 6000923 Radar Ground Speed and Distance Sensing Gun or Radar "Y" Harness.		
		For Use on Tractor with Radar.		
	6001396	C3000 Terminal / Monitor		5,299.00
	6001313	C1000 Terminal / Monitor		2,803.00
	6000993	Without Monitor (Order only if Tractor is Equipped with an Existing ISO Terminal / Monitor)		No Charge
◆◆Dealer Installed◆◆		**GROUND SPEED SENSOR - Order One per Planter**		**Required**
	6000923	Radar Ground Speed and Distance Sensing Gun	15	1,049.00
	6100064	Radar "Y" Harness (4 pin round tractor connector to 4 pin round monitor connector)		152.00
	6000810	Without Ground Speed and Distance Sensing (For Use with 6000993) (Uses Existing Radar)		No Charge
➢➢Factory Installed⮜⮜		**SECTION CONTROL SHUT-OFF - Order One per Planter**		**Required**
		Requires 6000787 Controller Below		
		Not Compatible with Auto Row Shut-Off		
32-7P01	6400058	Without Section Control Third-Width Shut-Off		No Charge
32-7P02	6400057	Section Control Third-Width Shut-Off (Includes 3 Clutches and Harness)	50	3,009.00
◆◆Dealer Installed◆◆		**CONTROLLER - Order One per Planter**		**Optional**
	6000787	Section Control Shut-Off Controller (Required only with Factory Installed Section Control Shut-Off)	2	403.00
➢➢Factory Installed⮜⮜		**ADDITIONAL EQUIPMENT - Order One per Planter**		**Optional**
33-BZ01	6400756	Blower Inlet Screen (Not for Use with P802, Direct Drive)		198.00
7-PS01	6401060	Row Unit Gauge Wheel Scrapers (31 Row)		1,086.00
	71427873W	Ship Safe Preservative Coating (Recommended for Protection When Shipped in Winter Months)		586.00

Note: Part # 72515753 - Radar "Y" Harness
(4 pin flat tractor connector to a 4 pin round monitor connector)
(Above Two "Y" Harnesses for tractors equipped with Radar Speed Sensing)

ORDER CODE	CATALOG NUMBER	DESCRIPTION	APPROX. WEIGHT (lb.)	LIST PRICE
➢➢Factory Installed⮜⮜		**DOWN PRESSURE SYSTEM - Order One per Planter**		**Required**
23-KB12	6401057	Heavy Duty Down Pressure Springs	12	6,282.00
23-KB10	6400027	Without Down Pressure Springs		No Charge
➢➢Factory Installed⮜⮜		**ROW UNIT MOUNTED TILLAGE - Order One per Planter**		**Required**
Heavy Duty Down Pressure Springs Recommended				
25-VA10	6400021	Without Unit Mounted Tillage Attachment		No Charge
25-VA13	6400561	Tillage Coulter with Ripple Blade.		9,800.00
25-VA15	6400577	Tillage Coulter with 13 Flute Blade.		9,800.00
25-VA18	6400585	Tillage Coulter with 25 Flute Blade.		9,800.00
For 31 Row (on 30-inch Row Width - Not Interplant Rows)				
25-VA16	6401160	Residue Manager - Finger Wheel . . . . . 13-inch Steel Wheel with 16 Fingers (For Use without Tillage Coulters)		6,145.00
25-VA19	6401159	Residue Manager - SharkTooth® Wheel . . . . . 13-inch Steel Wheel with 12 Teeth (For Use without Tillage Coulters)		6,637.00
25-VA20	6401158	Floating Residue Manager - SharkTooth® Wheel . . . . . with Depth Band, 13-inch Steel Wheel with 12 Teeth (For Use without Tillage Coulters)		8,996.00
25-VA11	6400545	Tillage Coulter without Blade. . . . . (Order Coulter Blades from 9000 Series Dealer Installed Section)		8,452.00
◆◆Dealer Installed◆◆		**GRANULAR INSECTICIDE ATTACHMENT**		**Optional**
<u>Granular Insecticide Attachment</u> - Order One Per Two Rows				
NOTE: Not for use with Row Unit Lock-up Option				
	6001844	Granular Insecticide Kit with Brackets . . . . . For use with CFS Mini-Hoppers Only (Not for use with 2 or 3 Bushel Hoppers)		1,236.00

NOTE: Liquid Fertilizer Attachments are *<u>NOT</u>* available for this model.

RESERVED

9936 Large Frame Folding Planters on Tracks

9936 Large Frame Folding Planters on Tracks

F.O.B. Wahpeton, North Dakota

FRAME COMPONENTS -- STANDARD EQUIPMENT

- **Tool Bar for White Planter Completing Components**
  - Rubber Track System: 30 inch x 67 inch or 25 inch x 67 inch
  - 150 Bushel CFS System
  - 7” x 7” Heavy Duty Main Bar
  - Tongue 12" x 12" Structural Tube with 10" x 10" Auto Latch Telescoping Tongue
  - Hydraulic Forward Folding Wings
  - Wings Rotate up 90 Degrees for Narrow Transport
  - Swivel Implement Hitch (2-inch or 2-3/4 inch Pin)
  - Adjustable Wing Wheel
  - Hydraulic Controlled Jack
  - Highway Transport Chain
  - Transport Warning Lights
  - SMV Sign and Mounting
- Hydraulics - 60 Ft and 66 Ft
  - 4 Lift Sequencing Cylinders
  - 2 Wing Fold Cylinders with Tongue Latch
  - 4 Tool Bar Tilt Cylinders
  - Complete with Hose, Hardware and Hydraulic Couplers
- Hydraulics - 90 Ft
  - 8 Lift Sequencing Cylinders
  - 4 Wing Fold Cylinders with Tongue Latch
  - 8 Tool Bar Tilt Cylinders
  - Complete with Hose, Hardware and Hydraulic Couplers

Model 9936 Central Fill Systems (CFS) are designed for planting corn, soybeans, milo, and popcorn.

Ordering Instructions:

1. Order Large Frame Folding Planter on Tracks Tool Bar and Options.
2. Order Frame Completing Components and Options from page 86.

Tractor Requirements:

-12 Volt Electrical System

-Uses Tractor Hydraulic Remotes (Direct Drive)

-Four Hydraulic Remotes with Total Minimum Flow of 55 GPM (208 LPM) Needed for:

1. Hydraulic Seed Drive and Seed Singling Blowers
2. Lift System for Frame Components
3. Frame Fold
4. Hydraulic Hitch Jack

ORDER CODE	CATALOG NUMBER	DESCRIPTION	APPROX. WEIGHT (lb.)	LIST PRICE
PULL-TYPE FORWARD FOLD TOOL BAR				
WP9900-20	350438AW	60 Foot 36 Row 20-inch Planter	18,548	69,290.00
WP9900-22	350439AW	66 Foot 36 Row 22-inch Planter	18,557	71,028.00
WP9900-30	242205AW	90 Foot 36 Row 30-inch Planter	29,748	114,606.00

ORDER CODE	CATALOG NUMBER	DESCRIPTION	APPROX. WEIGHT (lb.)	LIST PRICE
➢➢Factory Installed⮜⮜		**RUNNING GEAR - Order One per Planter**		**Required**
	354719AW	Axle 120-inch Center for 30-inch Wide Track . . . . . with 30" x 67" Rubber Track System (Payload NOT to exceed 70,000 lbs. - Row Units Included) (For use with WP9900-20, 9900-22, 9900-30)	6200	43,543.00
	354720AW	Axle 110-inch Center for 25-inch Wide Track . . . . . with 25" x 67" Rubber Track System (Payload NOT to exceed 60,000 lbs. - Row Units Included) (For use with WP9900-22)	5750	42,358.00
	354721AW	Axle 120-inch Center for 25-inch Wide Track . . . . . with 25" x 67" Rubber Track System (Payload NOT to exceed 60,000 lbs. - Row Units Included) (For use with WP9900-20 and WP9900-22)	5800	42,402.00
➢➢Factory Installed⮜⮜		**HITCH - Order One per Planter**		**Required**
	241305AW	Swivel Hitch Cat. IV (for 2 inch Pin)	60	382.00
	243805AW	Swivel Hitch Cat. V (for 2-3/4 inch Pin)	67	382.00
➢➢Factory Installed⮜⮜		**SEED TANKS - Order One per Planter**		**Required**
	248030AW	Set of Two 75 Bushel Seed Tanks and Covers . . . . . (without Fill System) Includes Mounts, Platform and Rear Staircase	2418	11,730.00
➢➢Factory Installed⮜⮜		**CENTRAL FILL PACKAGE - Order One per Planter**		**Required**
Includes Hi-Pressure 6-inch Fan and Hydraulic Motor, Mixing Chamber Below Tank, Horizontal Seed Tubes Deliver Seed to Row Units, Twin Tank Delivery				
	350436AW	Central Fill Package (WP9000-20).	967	12,700.00
	350437AW	Central Fill Package (WP9000-22).	1020	13,150.00
	247319AW	Central Fill Package (WP9000-30).	1275	14,995.00
➢➢Factory Installed⮜⮜		**ROW MARKERS - Order One per Planter**		**Optional**
	353077AW	Hydraulic Row Markers (WP9900-20)	2195	10,710.00
	353078AW	Hydraulic Row Markers (WP9900-22)	2334	10,874.00
➢➢Factory Installed⮜⮜		**ADDITIONAL EQUIPMENT - Order One per Planter**		**Optional**
	350888AW	(2) 750 Gallon Liquid Fertilizer Tanks . . . . . with Mounting Hardware	1680	6,154.00
	355416AW	Cleated Belt Tube Conveyor Fill System. . . . . 20 Bushels per minute, For use with Seed Tender, 10 Foot Fill Height	325	5,500.00
	247394AW	Digi-Star Scale System . . . . . For Seed or Liquid Fertilizer	10	2,829.00
	353267AW	Weight Ballast Package . . . . . Adds Weight to Wings to Help Provide Consistent Planting Depth on 60 Foot and 66 Foot Wings and 90 Foot Outer Wings	1673	2,310.00

9936 Large Frame Folding Planters on Tracks

F.O.B. Hesston, KS

COMPLETING COMPONENTS -- STANDARD EQUIPMENT

- 7” x 7” Secondary Rear Bar (Rotates 90 Degrees, Raising the Row Units for Transport)
- Planter Row Units Mounted on the Rear Bar
- Planter Units with:
  - Air Metering
  - Mini-Hopper for CFS System
    Includes Small, Large and Blank Seed Meter Screens
  - 16 inch Double Disc Openers
  - 4.5” x 16” Walking Beam Gauge Wheels
  - Flex Shaft Seed Meter Drive with Electric Clutch, Auto Row Shut-Off with Dual Row Control
  - Pneumatic Row Unit Down Pressure System with Compressor
- Seed Singling Blowers with:
  - Hydraulic Flow Control Valve
  - Air Pressure Gauge
  - Blower Inlet Screen
- Micro Processor Controlled Variable Rate Hydraulic Drive
  - Three Section Disconnect
  - Seed Drive Disconnect – Implement Lift Switch
- Direct Drive Hydraulic Couplers

Note: Seed Meter Blower Mounted Oil Coolers not Provided

Model 9936 Central Fill Systems (CFS) are designed for planting corn, soybeans, milo, and popcorn.

Dimensions for Frame and Completing Components:

# Rows	Spacing	Center Frame	Inner Wing	Outer Wing	Transport Width	Transport Height	Storage Length
36	20"	16' 2"	21' 6"	- - -	16' 2"	12' 8"	37' 6"
36	22"	16' 2"	24' 6"	- - -	16' 2"	12' 8"	37' 6"
36	30"	15' 0"	22' 6"	15' 0"	15' 0"	12' 8"	56' 0"

Ordering Instructions:
Planters are now available with many items Factory Installed.
Factory Installed items are not eligible for return to the factory.

1. Order Large Frame Folding Planter on Tracks Tool Bar and Options from page 84.
2. Order Frame Completing Components and Options.
3. Order Required Seed Discs from 9000 Series Dealer Installed Section.
4. Additional Dealer Installed Items can be Ordered for these Models from this Chapter and from 9000 Series Dealer Installed Section.
5. **Granular Chemical Attachment not Compatible with Model 9936**.
6. Accepts Row Unit Mounted Tillage Attachments Only
7. C3000 Terminal / Monitor and 10Hz or Stronger GPS Receiver are Required to Operate Standard Equipment Auto Row Shut-Off System

ORDER CODE	CATALOG NUMBER	DESCRIPTION	APPROX. WEIGHT (lb.)	LIST PRICE
LARGE FRAME FOLDING PLANTERS ON TRACKS				
WP9936-20	9936906	36 Row 20-inch Planter		119,409.00
WP9936-22	9936904	36 Row 22-inch Planter		122,552.00
WP9936-30	9936905	36 Row 30-inch Planter		132,284.00

ORDER CODE	CATALOG NUMBER	DESCRIPTION	APPROX. WEIGHT (lb.)	LIST PRICE
◆◆Dealer Installed◆◆		**COMMUNICATION MODULE - Order One per Planter**		**Required**
	6001400	Communication Module with 6 Programmable Toggle Switches for use with Flex Shaft Seed Meter Drive. Six Toggle Switches Provide Manual Control for Six Sections		509.00

The programmable communication module with toggle switches also provide manual back-up when using the Auto Row Shut-Off feature of the C3000 Terminal / Monitor if GPS signal is lost.

➢➢Factory Installed⮜⮜		**SEED TUBES AND SENSORS - Order One per Planter**		**Required**
16-P301	6401132	Seed Tubes with High Rate Sensors		6,607.00
16-P303	6401133	Seed Tubes with Seed Smart Sensors		10,847.00

➢➢Factory Installed⮜⮜		**CLOSING SYSTEM - Order One per Planter**		**Required**

NOTE: Angled Closing Wheels are factory installed in the staggered position with the left wheel forward and with two spacers under the wheels.

12-LR11	6401134	Angled Bracket with Rubber Closing Wheels	19	10,350.00
12-LR12	6401135	Angled Bracket with Cast Closing Wheels	54	11,916.00
12-LR14	6401137	Single “V” Trench Press Wheel	21	9,833.00
12-LR13	6401136	Angled Bracket without Closing Wheels (Order Closing Wheels from 9000 Series Dealer Installed Section)		5,843.00
12-LR10	6400803	Without Closing Wheels		No Charge

◆◆Dealer Installed◆◆		**MONITOR SYSTEM - Order One per Planter**		**Required**

Requires 6000923 Radar Ground Speed and Distance Sensing Gun.
For Use on Tractor with Radar.
If Tractor is Equipped with an Integrated C3000 Terminal / Monitor, Order 6000993.

	6001396	C3000 Terminal / Monitor		5,299.00
	6000993	Without Monitor (C3000 Terminal / Monitor is Required)		No Charge

Note: C3000 Terminal / Monitor required with Flex Shaft Seed Meter Drive

◆◆Dealer Installed◆◆		**GROUND SPEED SENSOR - Order One per Planter**		**Required**
	6000923	Radar Ground Speed and Distance Sensing Gun	15	1,049.00

➢➢Factory Installed⮜⮜		**ADDITIONAL EQUIPMENT - Order One per Planter**		**Optional**
7-PS01	6401139	Row Unit Gauge Wheel Scrapers		1,261.00
	71428520W	Ship Safe Preservative Coating (Recommended for Protection When Shipped in Winter Months)		586.00

ORDER CODE	CATALOG NUMBER	DESCRIPTION	APPROX. WEIGHT (lb.)	LIST PRICE
➢➢Factory Installed⮜⮜		**ROW UNIT MOUNTED TILLAGE - Order One per Planter**		**Required**
Heavy Duty Down Pressure Springs or Pneumatic Down Pressure Recommended				
25-VA10	6400021	Without Unit Mounted Tillage Attachment		No Charge
25-VA13	6400562	Tillage Coulter with Ripple Blade		11,382.00
25-VA15	6400578	Tillage Coulter with 13 Flute Blade		11,382.00
25-VA18	6400586	Tillage Coulter with 25 Flute Blade		11,382.00
25-VA16	6401140	Residue Manager - Finger Wheel 13-inch Steel Wheel with 16 Fingers (For Use without Tillage Coulters)		13,826.00
25-VA19	6401141	Residue Manager - SharkTooth® Wheel 13-inch Steel Wheel with 12 Teeth (For Use without Tillage Coulters)		14,933.00
25-VA20	6401143	Floating Residue Manager - SharkTooth® Wheel with Depth Band, 13-inch Steel Wheel with 12 Teeth (For Use without Tillage Coulters)		20,242.00
25-VA11	6400546	Tillage Coulter without Blade (Order Coulter Blades from 9000 Series Dealer Installed Section)		9,816.00
➢➢Factory Installed⮜⮜		**COMBINATION RESIDUE MANAGER - Order 1 per Planter**		**Optional**
Requires Factory Installed Row Unit Mounted Tillage Coulter (VA13, VA15, VA18 or VA11) Recommend Heavy Duty Down Pressure Springs or Pneumatic Down Pressure				
26-K102	6400602	Residue Manager Attachment 10-inch Steel Wheel with 16 Fingers and Bearing Shields		13,826.00
26-K103	6400610	Residue Manager Attachment 13-inch Steel Wheel with 16 Fingers and Bearing Shields		13,711.00
26-K104	6400618	Residue Manager Attachment 13-inch Steel SharkTooth® Wheel with 12 Teeth		14,819.00
26-K101	6400594	Residue Manager without Spoke Wheels (Order Wheels from 9000 Series Dealer Installed Section)		3,437.00

9000 Series
Dealer Installed Equipment

WP9000 Dealer Installed

WHITE PLANTERS

ORDER CODE	CATALOG NUMBER	DESCRIPTION	APPROX. WEIGHT (lb.)	LIST PRICE

ADDITIONAL EQUIPMENT — Optional

SEED DISCS

NOTE: For additional information on Seed Disc Applications, refer to Seed Disc Information in Operator's Manual.

Seed Discs - Order One Per Two Row Units (Unless Otherwise Noted)

6100024	Large Corn Seed Disc (30 Cell) (1,100 - 1,400 seeds per lb.)	1	41.00
6100023	Regular Corn Seed Disc (30 Cell) (1,300 - 1,900 seeds per lb.)	1	41.00
6100032	Small Corn Seed Disc (30 Cell) (1,600 - 2,800 seeds per lb.)	1	41.00
6001839	Flat Corn Seed Disc (30 Cell) (1200 - 2100 seeds per lb.)		41.00
6000709	Extremely Small Corn/Popcorn Seed Disc (30 Cell) (3,200 - 4,500 seeds per lb.)	1	41.00
6100027	Very Small Corn, Sunflower, Popcorn Seed Disc (30 Cell) (2,400 - 3,600 seeds per lb.)	1	41.00
6001000	Small Sunflower Seed Disc (30 Cell) (22/64-26-64 length x 11/64-18/64 girth)		41.00
6001001	Tickler Brush, Special (Order One for Eight Rows) (For use with 6001000)		62.00
6000698	Small Soybean Seed Disc (120 Cell) (3,000 - 4,500 seeds per lb.)	1	41.00
6100025	Soybean Seed Disc (120 Cell)	1	41.00
6100026	Soybean Seed Disc (60 Cell)	1	41.00
6000703	Sugar Beet Seed Disc (60 Cell) (for 4M Sugar Beet Pellets) (9.5/64 - 11.5/64 Dia. Seed, 12,000 - 14,000 seeds per lb.) (For Milo, 13,500 - 17,500 seeds per lb.)	1	41.00
6100031	Edible Bean Seed Disc (50 Cell)	1	41.00
6100253	Natto Bean Seed Disc (120 Cell)	3	141.00
6100028	Cotton - Large Pelletized Sugar Beet Seed Disc (60 Cell)	1	41.00
6001311	Small Cotton Seed Disc (60 Cell) (4,000 - 4,800 seeds per lb.)	1	41.00
6100130	Hill Drop Cotton Seed Disc (20 Cell) (3 seeds per hill)	2	141.00
6001840	Canola Seed Disc (120 Cell) (Seed size: 0.075 to 0.110 inches) (1.905 to 2.794 mm)	1	41.00
6100029	Sorghum-Milo Seed Disc (120 Cell)	1	41.00
6100129	Segmented Sugar Beet Seed Disc. (60 Cell) (8/64 - 11/64 Dia. Seed, 27,500 - 42,000 seeds per lb.) (for 2M Sugar Beet Pellets, Pelletized)	1	41.00
6001946	Components for 60 Cell Sugar Beet Seed Disc (9000 Series) (Includes Conductive Cutoff Brush)		47.00
6100254	Sugar Beet Seed Disc (60 Cell) (for 5M Sugar Beet Pellets) (11/64 - 14/64 Dia. Seed, 8,500 seeds per lb.)	3	141.00
6100106	Snap Bean Seed Disc (60 Cell) (1,200 - 2,500 seeds per lb.)	1	41.00
6100222	Wheat Seed Disc.	1	41.00
6001125	High Rate Virginia Peanut Seed Disc (38 Cell / High Air Flow) (550 seeds per lb.)		141.00

ORDER CODE	CATALOG NUMBER	DESCRIPTION	APPROX. WEIGHT (lb.)	LIST PRICE

ADDITIONAL EQUIPMENT — Optional

ROW UNIT and ACCESSORIES

Includes Parallel Links, 16-inch Double Disc Opener, 4.5-inch x 16-inch Walking Beam Gauge Wheels, Seed Tube and High Rate Sensor, U-Bolts for 7x7 Toolbar

6001799	Complete Row Unit with High Rate Sensor . . . . . . Includes One-Piece Mounting Bracket with Holes for Mounting Pneumatic Down Pressure		1,629.00

Does not include:
- Press/Closing Wheels
- Drive Sprocket, Chain and Tensioner
- Engage/Disengage Mechanism or Mounting Plate
- 2 or 3 Bushel Hopper and Meter or Support Bracket

Hopper Support Kit

6001420	Hopper Support Bracket for 2 or 3 Bushel Hopper. . . . . . to Attach Hoppers and Meters to 6001799		92.00

Note: If Flex Shaft Seed Meter Drive is Installed on the Row Unit, Order Part Number 700177960 Engage/Disengage Mechanism Mounting Plate. Plate is included in the Chain Drive Kit, Catalog Number 6001801 below.

Chain Seed Meter Drive

6001801	Chain Drive Kit. . . . . . Includes Chain, Sprockets, Tensioner, Engage/Disengage Mechanism and Mounting Plate		123.00

ROW UNIT ACCESSORIES

Hoppers and Meters Assembly for Row Unit (Order One per Row)
(Does Not Include the Hopper Support Bracket Required for use with 6001799 Row Unit Above when Installing 2 or 3 Bushel Seed Hopper and Meter.)

6001646	Two-Bushel Hopper and Meter	30	792.00
6001647	Three-Bushel Hopper and Meter.	35	929.00
6001648	CFS Mini-Hopper and Meter	30	682.00

Seed Hoppers (without Meter Assembly) (Order One per Row)
(Includes Hopper, Sealed Lid and Handle)

6001773	Two-Bushel Hopper	30	242.00
6001774	Three-Bushel Hopper	35	370.00
6001778	CFS Mini-Hopper		168.00

Flex Shaft Seed Meter Drive **(ORDER ONE PER PLANTER)**
(Includes Electric Clutch for Each Row and Switch Module and Harness For Auto Row Shut-Off)

6001494	Flex Shaft Seed Meter Drive, 9202 and 9222		6,600.00
6001469	Flex Shaft Seed Meter Drive, 9792		6,600.00
6001470	Flex Shaft Seed Meter Drive, 9776		8,800.00
6001478	Flex Shaft Seed Meter Drive, 9812		6,684.00
6001483	Flex Shaft Seed Meter Drive, 9816		8,912.00
6001706	Flex Shaft Seed Meter Drive, 9824		13,367.00

WP9000 Dealer Installed

WHITE PLANTERS

ORDER CODE	CATALOG NUMBER	DESCRIPTION	APPROX. WEIGHT (lb.)	LIST PRICE
ADDITIONAL EQUIPMENT				**Optional**
Closing System for Row Unit (includes Brackets)(Order One Per Row)				
	6001653	Single "V" Trench Press Wheel	20	273.00
	6001650	Angled Bracket with Rubber Closing Wheels	19	287.00
	6001651	Angled Bracket with Cast Closing Wheels	54	331.00
	6001652	Angled Bracket without Closing Wheels		163.00
Closing Wheels (Order One per Row)				
	6100103	Angled Rubber Closing Wheels, without Bracket (Requires Planter be Equipped with 12-LR13, Angled Bracket without Closing Wheel)	19	116.00
	6100101	Angled Cast Closing Wheels, without Bracket (Requires Planter be Equipped with Angled Rubber Closing Wheels or 12-LR13, Angled Bracket without Closing Wheel)	46	174.00
Seed Tubes and Sensors (ORDER ONE PER ROW)				
	6100287	Seed Tube with High Rate Sensor		183.00
	6000804	Seed Tube with Seed Smart Sensor Requires SM400SE Monitor, ISO C1000 or C3000 Terminal/Monitor or other ISO Terminal		302.00
U-Bolts for Mounting Row Units (ORDER ONE PER ROW)				
	2087169	U-Bolt Set for 7" x 7" Frame	5	30.00
	6001237	Metric U-Bolt Set for 7" x 7" Frame		30.00
Miscellaneous (ORDER ONE PER ROW)				
	6001809	Row Unit Lock Up Kit		211.00
	6001175	Row Unit 6-inch Set Back Bracket with Chain	20	173.00
	6000902	Split Row Seed Block Off Manifold, 9831 (Plant 30-inch Rows and Block Off Split Rows)		354.00
	6001688	Gauge Wheel Mud Scraper (4 Rows)		117.00
Seed Drain				
	6001797	Seed Drain Kit	5	65.00

ORDER CODE	CATALOG NUMBER	DESCRIPTION	APPROX. WEIGHT (lb.)	LIST PRICE

ADDITIONAL EQUIPMENT — Optional

Section Control Shut-Off (ORDER ONE PER PLANTER)

NOTE: For Use with Chain Drive Seed Meter Only
Section Control Clutches are not compatible with Flex Shaft/Automatic Row Shut-Off

6001325	Section Control Half-Width Shut-Off, 9202. . . . . . (Includes 2 Clutches, Controller and Harness)		1,895.00
6001328	Section Control Half-Width Shut-Off, 9222. . . . . . (Includes 2 Clutches, Controller and Harness)		1,895.00
6001474	Section Control Third-Width Shut-Off, 9500 Series . . . . . (Includes 3 Clutches, Controller and Harness)	52	3,003.00
6001304	Section Control Four-Section Shut-Off, 9792 and 9776 . . . (Includes 4 Clutches, Controller and Harness)		4,918.00
6001456	Section Control Half-Width Shut-Off, 9812. . . . . . (Includes 2 Clutches, Controller and Harness) For use with Ground or Hydraulic Drive	25	2,500.00
6001413	Section Control Half-Width Shut-Off, 9816 and 9824 . . . . (Includes 2 Clutches, Controller and Harness) For use with Ground Drive Only (ISO Terminal Controlled "Half Width Disconnect" is Standard on Hydraulic Drive)	25	2,500.00
6001145	Section Control Third-Width Shut-Off, 9831 . . . . . . (Includes 3 Clutches, Controller and Harness)	52	3,503.00

DOWN PRESSURE SYSTEM

Down Pressure Springs for Row Unit (Order One Per Two Row Units)

6001689	Standard Duty Down Pressure Springs (5 - 115 lbs). . . . . (Not Compatible with Row Unit Mounted Attachments)	7	129.00
6000588	Heavy Duty Down Pressure Springs (30 - 480 lbs)	24	403.00

Pneumatic Down Pressure
For Use on 9106, 9108, 9702, 9708, and 9722 Models Only

6001842	Pneumatic Down Pressure (4 Row Set) . . . . . . Order One per 4 Rows **Requires Compressor and Hose**		896.00
6001466	Pneumatic Down Pressure Compressor	20	844.00
6001370	Pneumatic Down Pressure Hose (100 Feet). . . . . . (Plumbs Up to 12 Rows)		181.00

Pneumatic Down Pressure System (Order One per Planter)
(Includes Compressor and Hose)

6001707	Pneumatic Down Pressure System, 9202, 9222	340	3,532.00
6001482	Pneumatic Down Pressure System, 9776	500	3,584.00
6001481	Pneumatic Down Pressure System, 9792	500	2,688.00
6001448	Pneumatic Down Pressure System, 9812	240	3,532.00
6001708	Pneumatic Down Pressure System, 9816	340	4,428.00
6001709	Pneumatic Down Pressure System, 9824	500	6,146.00

ORDER CODE	CATALOG NUMBER	DESCRIPTION	APPROX. WEIGHT (lb.)	LIST PRICE

ADDITIONAL EQUIPMENT — Optional

TILLAGE ATTACHMENTS and ACCESSORIES

NOTE: Only ONE of the Following Tillage Attachments can be used at a time:

Tillage Coulters
12" Disc Furrower
Bed Leveler Attachment
Strip-Ridge Till Coulters
Spring Tine Tillage Attachment

Row Unit Mounted Tillage Coulters (Order One Per Row)

	Heavy Duty Down Pressure Springs or Pneumatic Down Pressure System Recommended		
6001691	Tillage Coulter with Bubble Blade	41	316.00
6001692	Tillage Coulter with Ripple Blade.	41	316.00
6001693	Tillage Coulter with 8 Flute Blade	39	316.00
6001694	Tillage Coulter with 7/8 inch - 13 Flute Blade	37	316.00
6001695	Tillage Coulter with 25 Flute Blade.		316.00
6001658	Trash Masters - 12-inch Solid Blades	34	378.00

Residue Managers

	Heavy Duty Down Pressure Springs or Pneumatic Down Pressure System Recommended		
6001250	Residue Manager Attachment, 13-inch Steel Wheel with 16 Fingers and Bearing Shields (For Use with Tillage Coulters) (Not for Use with 9524-20 Planter)	42	381.00
6001249	Residue Manager Attachment, 10-inch Steel Wheel with 16 Fingers and Bearing Shields (For Use with Tillage Coulters) (Not for Use with 9524-20 Planter)	42	384.00
6001245	Residue Manager - SharkTooth® Wheel Attachment 13-inch Steel Wheel with 12 Teeth (For Use with Tillage Coulters) (Not for Use with 9524-20 Planter)		412.00
6001655	Residue Manager Attachment, 13-inch Steel Wheel with 16 Fingers and Bearing Shields (For Use without Tillage Coulters)	42	384.00
6001656	Residue Manager with SharkTooth® Wheel 13-inch Steel Wheel with 12 Teeth (For Use without Tillage Coulters)		415.00
6001657	Floating Residue Manager - SharkTooth® Wheel with Depth Band 13-inch Steel Wheel with 12 Teeth (For Use without Tillage Coulters)		562.00

Residue Manager Wheels

To Convert From One Residue Manager Wheel Type to another without Changing Mounting Bracket or for use with K101.

6001008	10-inch Spoke Wheels	345.00
6001009	13-inch Spoke Wheels	311.00
6001244	SharkTooth® Residue Manager Wheels Only	321.00

ORDER CODE	CATALOG NUMBER	DESCRIPTION	APPROX. WEIGHT (lb.)	LIST PRICE

ADDITIONAL EQUIPMENT — Optional

Frame Mounted Spring Cushion Tillage Coulters (Order One Per Row)
Includes U-Bolts (For use on 9100, 9180 only)
(Not Recommended for use on 9708, 9702 and 9722)

6001254	7/8 inch - 13 Flute Blade		454.00
6001255	7/8 inch - 8 Flute Blade	55	454.00
6001256	3/4 inch Bubble Blade	56	454.00
6001257	5/16 inch Ripple Blade	56	454.00
6001258	5/8 inch - 25 Flute Blade		454.00

Frame Mounted Strip-Ridge Till Coulters (Order One Per Row)
Includes U-Bolts (For use on 9100, 9180 only)
(Not Recommended for use on 9708, 9702 and 9722)

6001259	7/8 inch - 13 Flute Blade		671.00
6001261	7/8 inch - 8 Flute Blade	74	671.00
6001262	3/4 inch Bubble Blade	75	671.00
6001260	5/16 inch Ripple Blade	75	671.00
6001263	5/8 inch - 25 Flute Blade		671.00

Coulter Blades (Without Bracket) (Order One per Row)
For Use with 25-VA11 Only

6100102	7/8 inch - 13 Flute Blade		42.00
6100110	7/8 inch - 8 Flute Blade	5	42.00
6100111	3/4 inch Bubble Blade	6	42.00
6100112	5/16 inch Ripple Blade	6	42.00
6100113	5/8 inch - 25 Flute Blade		42.00

WP9000 Dealer Installed

WHITE PLANTERS

ORDER CODE	CATALOG NUMBER	DESCRIPTION	APPROX. WEIGHT (lb.)	LIST PRICE

ADDITIONAL EQUIPMENT — Optional

FERTILIZER OPENERS and ATTACHMENTS

NOTE: See Charts on the Following Pages for Applications

Fertilizer Openers for Granular Fertilizer - Order One Per Two Row Units

6000526	Single Disc Fertilizer Opener - Dry Side Knife		1,308.00
6000535	Single Disc Fertilizer Opener (25 Wave) Dry Trailing Knife with Multi Wave Blade		1,293.00
6000356	Single Disc Fertilizer Opener (50 Wave) Dry Trailing Knife with Ripple Blade (Includes One Right and One Left Hand Coulter)	186	1,319.00

Fertilizer Openers for Liquid Fertilizer - Order One Per Two Row Units

6000525	Single Disc Fertilizer Opener - Liquid Injector (Requires Orifice Tip or Nozzle to Complete - Source Locally)		1,293.00
6000527	Single Disc Fertilizer Opener - Liquid Side Knife		1,293.00
6000534	Single Disc Fertilizer Opener (25 Wave) Liquid Trailing Knife with Multi Wave Blade		1,293.00
6000355	Single Disc Fertilizer Opener (50 Wave) Liquid Trailing Knife with Ripple Blade (Includes One Right and One Left Hand Coulter)	176	1,319.00

Fertilizer Openers for Granular or Liquid - Order One Per Two Row Units

6100459	Double Disc Opener - 13-1/2 inch Diameter.	75	803.00
6001486	Double Disc Opener - 13-1/2 inch Diameter, 9812	75	803.00

ORDER CODE	CATALOG NUMBER	DESCRIPTION	APPROX. WEIGHT (lb.)	LIST PRICE

ADDITIONAL EQUIPMENT — Optional

Fertilizer Opener Brackets - (Order One per Planter, unless otherwise noted)
SEE CHART for APPLICATIONS

6001150	Bracket Set for Single Disc Fertilizer Openers	28	122.00
6000609	Offset Shank Set for Single Disc Fertilizer Openers . . . . . (Order One per Four Rows)	101	240.00
6001106	Fertilizer Opener Bracket Set (Right and Left Hand). . . . . (Order One per Two Rows)		323.00

Bracket Chart for Single Disc Fertilizer Openers

(Double Disc Openers do not require brackets for models 9100 and 9180. Bracket RH and LH required for 9200 Series.)

MODEL	Without Tillage Attachments	Row Unit Mounted			Frame Mounted	
		Residue Mgr or Trash Master	Tillage Coulters Only	Tillage Coulters & Residue Mgr Combination	Tillage Coulters Only	Tillage Coulters & Residue Mgr Combination
9100 Rigid Frame	6001150	6001150	6001150	6001150	6001150	6001150
9180 (Dry Knife Requires Part # N852889, Adapter Tube)	6000609	6000609	6000609	6000609 (Only #6000526 & 6000527 Side Knife Can Be Used)	Can Not Be Used	
9202 and 9222	6000609, 6001106	6000609, 6001106	6000609, 6001106	Can Not Be Used	Can Not Be Used	

Liquid Fertilizer Pumps
NOT FOR USE WITH SOME PLANTERS

2086019	Squeeze Pump (Order 1 for 9106, Order 2 for 9182)	34	961.00
2086029	Squeeze Pump (Order 1 for 9108, Order 2 for 9186)	55	1,441.00
6001070	Single Piston Pump (9100, 9180, 9200, 9812, 9816)		2,097.00
6001069	Double Piston Pump (9824)		3,121.00
6001226	Contact Drive for Piston Pump. . . . . (To Move Piston Pump from Planter Seed Drive to Contact Drive Tire System. For 9100, 9180)		790.00

WP9000 Dealer Installed

WHITE PLANTERS

9800 Series Narrow Transport Folding Planter Fertilizer Bracket Chart

Brackets for Double Disc Fertilizer Openers

		Row Unit Mounted			Frame Mounted
Model	Without Tillage Attachments	Residue Mgr or Trash Master	Tillage Coulters Only	Tillage Coulters & Residue Mgr Combination	Frame Mounted Tillage Coulters Not Applicable
9812	6001484	6001484	6001484	6001484	
9816	(1) 6001215	(1) 6001215	(1) 6001215	(1) 6001215	
9824	(1) 6001216	(1) 6001216	(1) 6001216	(1) 6001216	

Brackets for Single Disc Side Knife Fertilizer Openers

		Row Unit Mounted			Frame Mounted
Model	Without Tillage Attachments	Residue Mgr or Trash Master	Tillage Coulters Only	Tillage Coulters & Residue Mgr Combination	Frame Mounted Tillage Coulters Not Applicable
9812	6001485	6001485	6001485	Can Not Be Used	
9816	(1) 6001215 (4) 6001068	(1) 6001215 (4) 6001068	(1) 6001215 (4) 6001068	Can Not Be Used	
9824	(1) 6001216 (6) 6001068	(1) 6001216 (6) 6001068	(1) 6001216 (6) 6001068	Can Not Be Used	

ORDER CODE	CATALOG NUMBER	DESCRIPTION	APPROX. WEIGHT (lb.)	LIST PRICE
Fertilizer Opener Mounting Brackets (Order One per Planter)				
	6001484	Fertilizer Opener Mounting Brackets for Double Disc, 9812 . .		3,378.00
	6001485	Fertilizer Opener Mounting Brackets for Single Disc, 9812 . . .		3,378.00
	6001215	Fertilizer Opener Mounting Brackets for 9816	340	3,097.00
	6001216	Fertilizer Opener Mounting Brackets for 9824		4,705.00
Offset Shanks (Order One per Four Rows)				
	6001068	Offset Shank Set for Single Disc Fertilizer Openers . . . . . for 9816 and 9824 Only (Required to Mount Liquid Side Knife)	101	240.00

9000 Series Granular Insecticide Attachments

Granular Insecticide Attachments (Order One per Two Row Units, unless otherwise noted)
NOT FOR USE WITH FLEX SHAFT SEED METER DRIVE OR ROW UNIT LOCKUP OPTION

	6001843	Granular Insecticide Kit with Brackets . . . . . For use with 2 Bushel Hoppers Only (Not for use with 3 Bushel Hoppers)		1,236.00
	6001844	Granular Insecticide Kit with Brackets . . . . . For use with CFS Mini-Hoppers Only (Not for use with 2 or 3 Bushel Hoppers)		1,236.00
	6001845	Extension Harness and Light Bracket Kit . . . . . Required for Models 9182 and 9186 Only **(Order One Per Planter)**		81.00
	6100221	Insecticide Hopper Seal Kit . . . . . For use on the 9722 Row Units on the Wings		81.00

ORDER CODE	CATALOG NUMBER	DESCRIPTION	APPROX. WEIGHT (lb.)	LIST PRICE

MARKERS AND ACCESSORIES - Order One Per Planter — Optional

Markers (Without Marker Disc)

6001154	Rigid Markers for 9106	208	1,236.00
6001155	Folding Markers for 9108	383	2,719.00
6001156	Folding Markers for 9182	381	4,079.00
6001157	Folding Markers for 9186		5,438.00
6001166	Folding Markers for 9708		2,719.00
6001282	Folding Markers for 9702 and 9722		4,079.00

Marker Discs with Hub, Bearing, and Bracket (For Use with Rigid and Folding Markers Above)

6100094	Notched Marker Discs	30	458.00

Flat Fold Markers with Notched Marker Discs (Includes Markers and Cylinders)

6001159	Flat Fold Markers for 9108	950	5,554.00
6001160	Flat Fold Markers for 9182	931	8,034.00
	(Will not work with Granular Fertilizer Attachments)		
6001161	Flat Fold Markers for 9186	1392	10,712.00
6001204	Tri-Fold Markers for 9200		5,720.00
6001163	Tri-Fold Markers for 9523	1000	5,720.00
6000869	Tri-Fold Markers for 9524-20	1658	11,451.00
6000870	Tri-Fold Markers for 9524-22	1658	11,590.00
6001169	Flat Fold Markers for 9708	1000	5,447.00
6001170	Flat Fold Markers for 9702	1000	6,110.00
6001168	Rear Folding Markers for 9772		8,886.00
6001303	Rear Folding Markers for 9792 and 9776		10,960.00
6001391	Bi-Fold Markers for 9812		6,791.00
6000999	Tri-Fold Markers for 9816	1544	11,337.00
6001025	Tri-Fold Markers 9824	1544	16,068.00
6000901	Tri-Fold Markers for 9831		11,492.00

Model	Cat. Number	Hydraulic Cylinders	Break-Away Feature	Hydraulic Hoses	Sequence Valve
9106	6001154	X			
9108	6001155	X			
9182	6001156	X			
9186	6001157	X		X	
9708	6001166	X		X	X
9702/9722	6001282	X		X	X
9108	6001159	X	X	X	
9182	6001160	X	X		
9186	6001161	X	X		
9200	6001204	X	X	X	X
9523	6001163	X	X	X	
9524-20	6000869	X		X	X
9524-22	6000870	X		X	X
9708	6001169	X	X	X	X
9702	6001170	X	X	X	X
9772	6001168	X			
9792/9776	6001303	X			
9812	6001391	X	X	X	X
9816	6000999	X	X	X	X
9824	6001025	X	X	X	X
9831	6000901	X	X	X	

WP9000 Dealer Installed

WHITE PLANTERS

ORDER CODE	CATALOG NUMBER	DESCRIPTION	APPROX. WEIGHT (lb.)	LIST PRICE
ADDITIONAL EQUIPMENT				**Optional**
		MISCELLANEOUS		
Seed Chart				
	6100232	Seed Rate Chart Decal Package, ... 36-inch and 40-inch Row Spacing, for Ground Drive Planters		29.00
Displays				
	6000599	Display Cart for Complete Row Unit (6001799)		331.00
	6001838	White Planter Row Unit Display . . . . . (Includes 9000 Series Row Unit with seed tube mounted on 2-wheel display stand, seed meter with two-bushel hopper and decals on two sides, angled rubber closing wheels, flex shaft seed drive with electric clutch, pneumatic down pressure less compressor, and gauge wheel mud scrapers)		3,760.00
Miscellaneous Options				
	2086669	Basic Drive Wheel Arm Rock Guard (9100 and 9180) . . . . (One Required for Two Drive Wheels)	43	197.00
	6000797	Blower Inlet Screen	3	99.00
	6001059	Set of Two Blower Inlet Screens (9816 and 9824) . . . . . (Order One per Planter)	6	200.00
	6100057	Transmission Shield (9100, 9180, 9700). . . . . (Recommended for Heavy Trash Conditions) (Not for use with Contact Drive Transmissions)		25.00
Stroke Control Segments				
	2087129	Cylinder Stops -Includes (2) 4-3/8 inch . . . . . and (2) 3-3/4 inch Stops (One per 6 and 8 Row; Two per 12 and 16 Row) (Required when Planting on Ridges)	7	66.00

ORDER CODE	CATALOG NUMBER	DESCRIPTION	APPROX. WEIGHT (lb.)	LIST PRICE

ADDITIONAL EQUIPMENT — Optional

MISCELLANEOUS

Miscellaneous Planter Components

NOTE: When mounting White Row Units on another manufacturer's toolbar, contact toolbar manufacturer for assembly instructions and list of components required.

6100014	Blower	58	1,348.00
6100095	Manifold Package (Includes transition for blower, elbows and air hoses to accommodate 13 row units. Additional components will be required depending on toolbar and row configuration.)	59	694.00
2087429	120-inch Air Duct	15	96.00
6001126	Seed Transmission for Row Unit Drive (Drive Shafts Not Included)	66	918.00

Blower Drive for Air System
Seed Singling Blower Drive for Planters with one (1) Blower
NOT FOR HYDRAULIC DRIVE PLANTERS

6001047	540 RPM PTO Pump	37	1,524.00
6001048	1000 RPM PTO Pump for 1-3/8 inch Spline Shaft	34	1,678.00
6001049	1000 RPM PTO Pump for 1-3/4 inch Spline Shaft		1,678.00
2086049	Direct Drive (Uses Existing Tractor Hydraulics)	2	76.00

PTO Hydraulic Pump and Reservoir for Hydraulic Drive Planters

6000749	10 GPM PTO Pump with 6.4 Gallon Reservoir (for 9500 Series Only) Requires PTO Pump Adapter # 6000747 or 6000748, Requires some Modification to Mount to Planters.		2,089.00
6001330	14 GPM PTO Pump with 8.5 Gallon Reservoir (for 9816 and 9824 Hydraulic Drive Planters Only) Requires PTO Pump Adapter # 6000747 or 6000748, Requires some Modification to Mount to Planters.		2,089.00
6001449	40 GPM PTO Pump with 25 Gallon Reservoir and 1-3/8 inch PTO Spline Shaft (for 9812 Hydraulic Drive Planters Only) Does Not Require PTO Pump Adapter, Requires some Modification to Mount to Planters.		3,348.00

PTO Pump Adapters

6000747	1000 RPM PTO Pump Adapter for 1-3/4 inch Shaft		167.00
6000748	1000 RPM PTO Pump Adapter for 1-3/8 inch Shaft		167.00

WP9000 Dealer Installed

ORDER CODE	CATALOG NUMBER	DESCRIPTION	APPROX. WEIGHT (lb.)	LIST PRICE

ADDITIONAL EQUIPMENT — Optional

MONITORS and ACCESSORIES

Monitors for Ground Drive Planters

6000805	SM100 Seed Flow Monitor (up to 8 Rows)	20	1,194.00
6000806	SM300 Seed Population Monitor (up to 8 Rows) (Requires Magnetic Ground Speed Sensor or Radar Ground Speed and Distance Sensing Gun)	25	1,625.00
6000807	SM400SE Seed Population Monitor (12 and 16 Rows) (Requires Magnetic Ground Speed Sensor or Radar Ground Speed and Distance Sensing Gun)	25	2,324.00
6001214	Monitor Bridge Package (for 12 Rows and More) (For use with Non ISO Ground Drive Planter Using a Tractor Equipped ISO Terminal / Monitor)		1,762.00

Monitors for Hydraulic Drive Planter (or Ground Drive with ISO System CE01)

NOTE: Requires 6000923 Radar Ground Speed and Distance Sensing Gun or 6100064 Radar "Y" Harness. For Use on Tractor with Radar.

6001396	C3000 Terminal / Monitor		5,299.00
6001972	C3000 Integrated Console Kit For use on Tractors that are Auto-Guide Ready or have Full Auto-Guide 3000, Includes the Console and Harness to Integrate the Console into Tractor Factory Installed ISO Bus and Auto-Guide.	TBD	TBD
6001313	C1000 Terminal / Monitor		2,803.00
6001971	C1000 Integrated Console Kit For use on Tractors that are Auto-Guide Ready or have Full Auto-Guide 3000, Includes the Console and Harness to Integrate the Console into Tractor Factory Installed ISO Bus and Auto-Guide.	TBD	TBD

Communication Module

6001401	Programmable Toggle Switch Module for use in Combination with 6001400. (Six Manual Toggle Switches) Provides Manual Row Shut-Off for Additional 6 Sections (Total of 12 Sections)		441.00

ORDER CODE	CATALOG NUMBER	DESCRIPTION	APPROX. WEIGHT (lb.)	LIST PRICE

ADDITIONAL EQUIPMENT — Optional

HARNESSES and SENSORS

Harnesses and Sensors

6100280	CFS Hopper Level Sensor (Plugs into 2 or 4 Channel Terminal / Monitor Harness)		167.00
2087219	6 Row Harness for High Rate Sensors		295.00
2087229	8 Row Harness for High Rate Sensors		370.00
6000923	Radar Ground Speed and Distance Sensing Gun	15	1,049.00
6100059	Magnetic Ground Speed Sensor for 9108, 9708		160.00
6000988	Magnetic Ground Speed Sensor for 9772	4	194.00
6000955	Magnetic Ground Speed Sensor for 9182, 9186, 9702, 9722, 9776, 9792	4	194.00
6100064	Radar "Y" Harness (4 pin round tractor connector to 4 pin round monitor connector)		152.00

NOTE: Part # 72515753 - Radar "Y" Harness
(4 pin flat tractor connector to a 4 pin round monitor connector)
(Above Two "Y" Harnesses for tractors equipped with Radar Speed Sensing)

Harness Extensions

6001490	5 Ft Battery Power Harness Extension, 9936 For use with many Track Tractors. Extends battery harness to the back of tractor. (9936 Supplied Harness is 12 Ft)	9	205.00
6001491	10 Ft Battery Power Harness Extension, 9936 For use with many Articulated Tractors. Extends battery harness to the back of tractor. (9936 Supplied Harness is 12 Ft)	14	256.00
6100286	15 Ft Extension Harness for Magnetic Distance Sensor	2	50.00

NOTE: Part #700723738 16 Ft ISO Extension Harness (for use with ISO Consoles)

RESERVED

8000 Series
Dealer Installed Equipment

ORDER CODE	CATALOG NUMBER	DESCRIPTION	APPROX. WEIGHT (lb.)	LIST PRICE

ADDITIONAL EQUIPMENT — Optional

SEED DISCS

NOTE: For additional information on Seed Disc Applications, refer to Seed Disc Information in Operator's Manual.

Seed Discs - Order One Per Two Row Units (Unless Otherwise Noted)

6100024	Large Corn Seed Disc (30 Cell) (1,100 - 1,400 seeds per lb.)	1	41.00
6100023	Regular Corn Seed Disc (30 Cell) (1,300 - 1,900 seeds per lb.)	1	41.00
6100032	Small Corn Seed Disc (30 Cell) (1,600 - 2,800 seeds per lb.)	1	41.00
6001839	Flat Corn Seed Disc (30 Cell) (1200 - 2100 seeds per lb.)		41.00
6000709	Extremely Small Corn/Popcorn Seed Disc (30 Cell) (3,200 - 4,500 seeds per lb.)	1	41.00
6100027	Very Small Corn, Sunflower, Popcorn Disc (30 Cell) (2,400 - 3,600 seeds per lb.)	1	41.00
6001000	Small Sunflower Seed Disc (30 Cell) (22/64-26-64 length x 11/64-18/64 girth)		41.00
6001001	Tickler Brush, Special (Order One for Eight Rows) (For use w/ 6001000)		62.00
6000698	Small Soybean (120 Cell) (3,000 - 4,500 seeds per lb.)	1	41.00
6100025	Soybean Seed Disc (120 Cell)	1	41.00
6100026	Soybean Seed Disc (60 Cell)	1	41.00
6100031	Edible Bean Seed Disc (50 Cell)	1	41.00
6100253	Natto Bean Seed Disc (120 Cell)	3	141.00
6100028	Cotton - Large Pelletized Sugar Beet Seed Disc (60 Cell)	1	41.00
6001311	Small Cotton Seed Disc (60 Cell) (4,000 - 4,800 seeds per lb.)	1	41.00
6100130	Hill Drop Cotton Seed Disc (20 Cell) (3 seeds per hill)	2	141.00
6100029	Sorghum-Milo Seed Disc (120 Cell)	1	41.00
6100030	Segmented Sugar Beet Seed Disc. (30 Cell) (8/64 - 11/64 Dia. Seed, 27,500 - 42,000 seeds per lb.)	1	41.00
6100129	Segmented Sugar Beet Seed Disc. (60 Cell) (8/64 - 11/64 Dia. Seed 27,500 - 42,000 seeds per lb.) (for 2M Sugar Beet Pellets, Pelletized) (Recommend 6000589 Components)	1	41.00
6000589	Components for 60 Cell Sugar Beet Seed Disc (Includes Conductive Cutoff Brushes) (Order One Per Two Rows)		47.00
6000703	Sugar Beet Seed Disc (60 Cell) (for 4M Sugar Beet Pellets) (9.5/64 - 11.5/64 Dia Seed, 12,000 - 14,000 seeds per lb.) (For Milo, 13,500 - 17,500 seeds per lb.)	1	41.00
6100254	Sugar Beet Seed Disc (60 Cell) (for 5M Sugar Beet Pellets) (11/64 - 14/64 Dia. Seed, 8,500 seeds per lb.)	3	141.00
6100106	Snap Bean Seed Disc (60 Cell) (1,200 - 2,500 seeds per lb.)	1	41.00
6100222	Wheat Disc.	1	41.00
6001125	High Rate Virginia Peanut Seed Disc (38 Cell / High Air Flow) (550 Seeds per Lb.)		141.00

ORDER CODE	CATALOG NUMBER	DESCRIPTION	APPROX. WEIGHT (lb.)	LIST PRICE
ADDITIONAL EQUIPMENT				**Optional**
		DOWN PRESSURE SPRINGS		
Down Pressure Springs for Row Unit (Order One Per Two Row Units)				
	6000588	Heavy Duty Down Pressure Springs (30 - 480 lbs) . . . . . (Recommended for Row Unit Mounted Attachments)	24	403.00
		PNEUMATIC DOWN PRESSURE		
For Use on 8106, 8108, 8702, 8708, and 8722 Models Only				
	6001842	Pneumatic Down Pressure (4 Row Set) . . . . . Order One per 4 Rows for Which Option is Desired **Requires Compressor and Hose**		896.00
	6001321	Compressor for Pneumatic Down Pressure	20	844.00
	6001370	Pneumatic Down Pressure Hose (100 Feet) . . . . . (Will Plumb Up to 12 Rows)		181.00
		ROW UNIT and ACCESSORIES		
Includes Parallel Links, 15" Double Disc Opener, 4.5" x 16" Walking Beam Gauge Wheels, Seed Tube & High Rate Sensor, U-Bolts for 7x7 Toolbar				
	6001238	One-Piece Row Unit Mounting Plate (Set of Four) . . . . . Order One per 4 Rows Includes Holes for Mounting Pneumatic Down Pressure		199.00
Hopper / Meter Assembly for Row Unit (Order One per Row)				
	6000767	2 Bushel Hopper and Meter Assembly	30	792.00
	6000768	3 Bushel Hopper and Meter Assembly . . . . . (Not for use with Granular Herbicide - Insecticide Attachment)	35	929.00
Closing Wheels (Order One per Row)				
	6100103	Angled Rubber Closing Wheels, Less Bracket . . . . . (Requires Planter be Equipped with 12-LR13, Dual Angled Bracket Less Closing Wheel)	19	116.00
	6100101	Angled Cast Closing Wheels, Less Bracket . . . . . (Requires Planter be Equipped with Angled Rubber Closing Wheels or 12-LR13, Dual Angled Bracket Less Closing Wheel)	46	174.00
Seed Tubes/Sensors (ORDER ONE PER ROW)				
	6100287	Seed Tube with High Rate Sensor		183.00
	6000804	Seed Tube with Seed Smart Sensor . . . . . Requires SM400SE Monitor, ISO C1000 or C3000 Terminal/Monitor or other ISO Terminal		302.00
U-Bolts for Mounting Row Units (ORDER ONE PER ROW)				
	2087169	7" x 7" U-Bolts for 7" x 7" Frame	5	30.00

WP8000 Dealer Installed

WHITE PLANTERS

ORDER CODE	CATALOG NUMBER	DESCRIPTION	APPROX. WEIGHT (lb.)	LIST PRICE
ADDITIONAL EQUIPMENT				**Optional**
Miscellaneous (ORDER ONE PER ROW UNLESS OTHERWISE NOTED)				
	6001175	Row Unit 6" Set Back Bracket with Chain	20	173.00
	6001239	Flat Row Unit Disc Opener Scrapers. (3.5" (90 mm) (4 rows)		151.00
	6001326	Gauge Wheel Mud Scraper (4 Rows) (For use with serial No. "BH" (2011) and later models)		117.00
	2086669	Basic Drive Wheel Arm Rock Guard (Model 8100 and 8180) (One required for two drive wheels)	43	197.00
	6000797	Blower Inlet Screen (2007 and Later)	3	99.00
	6001059	Set of Two Blower Inlet Screens (8816 and 8824)	6	200.00
	6100057	Transmission Shield (Recommended for Heavy Trash Conditions) (Not for use with Contact Drive Transmissions)	2	25.00
	6000628	Seed Drain Kit	5	65.00
	6100232	Seed Rate Chart Decal Package, 36" and 40" Row Spacing, for Ground Drive Planters		29.00
Stroke Control Segments				
	6000396	Stroke Control Segments (For use on cylinders having 1-1/8 thru 1-1/4 rod. Set offers 3/4 inch to 4-1/2 inch control in 1/4 inch increments for 2 cylinders.)	4	55.00
	2087129	Cylinder Stops -Includes (2) 4-3/8” and (2) 3-3/4” Stops (One per 4, 6, and 8 Row; Two per 12 and 16 Row) (Required When Planting on Ridges)	7	66.00

ORDER CODE	CATALOG NUMBER	DESCRIPTION	APPROX. WEIGHT (lb.)	LIST PRICE

ADDITIONAL EQUIPMENT — Optional

TILLAGE ATTACHMENTS and ACCESSORIES

NOTE: Only ONE of the Following Tillage Attachments can be used at a time:
No-Till Coulters — Strip-Ridge Till Coulters
12" Disc Furrower — Spring Tine Tillage Attachment — Bed Leveler Attachment

Residue Managers

6001250	Residue Manager Attachment,. . . . . . 13-inch Steel Wheel with 16 Fingers (for above Coulters or Coulters ordered Factory Installed) Includes Bearing Shields. (Requires Heavy Duty Down Pressure Springs) (Not for Use with 8524-20 Planter)	42	381.00
6001249	Residue Manager Attachment,. . . . . . 10-inch Steel Wheel with 16 Fingers (for above Coulters only) Includes Bearing Shields. (Requires Heavy Duty Down Pressure Springs) (Not for Use with 8524-20 Planter)	42	384.00
6001245	Residue Manager - SharkTooth® Wheel Attachment . . . . 13-inch Steel Wheel with 12 Teeth (For above coulters or coulters ordered Factory Installed) (Not for use with 8524-20 Planter)		412.00
6001244	SharkTooth® Residue Manager Wheels Only . . . . . . without Bracket (order one per row) 13-inch Steel Wheel with 12 Teeth (For use as a replacement for 13" Steel Wheel with 16 fingers)		321.00

Frame Mounted Spring Cushion No-Till Coulters (Order One Per Row)
Includes U-Bolts (For use on 8100, 8180, & 8708, 8702, & 8722 Models only)

6001254	7/8" - 13 Flute Blade (16" Dia)	55	454.00
6001255	7/8" - 8 Flute Blade (16" Dia).	55	454.00
6001256	¾" - Bubble Blade (16" Dia)	56	454.00
6001257	5/16" - Ripple Blade (17" Dia)	56	454.00
6001258	25 Flute Blade (16" Dia)	56	454.00

Frame Mounted Attachments

6000304	Residue Manager Attachment		384.00
6001285	Residue Manager SharkTooth® Wheel (frame mounted) . .		415.00

Frame Mounted Strip-Ridge Till Coulters (Order One Per Row)
Includes U-Bolts (For use on 8100, 8180, & 8708, 8702, & 8722 Models only)

6001259	7/8" - 13 Flute Blade (16" Dia)	75	671.00
6001261	7/8" - 8 Flute Blade (16" Dia).	74	671.00
6001262	¾" - Bubble Blade (16" Dia)	75	671.00
6001260	5/16" - Ripple Blade (17" Dia)	75	671.00
6001263	25 Flute Blade (16" Dia)	75	671.00

Coulter Blades (Without Bracket) (Order One per Row)
For Use with 25-VA11 Only

6100102	7/8" - 13 Flute Blade (16" Dia)	5	42.00
6100110	7/8" - 8 Flute Blade (16" Dia).	5	42.00
6100111	¾" - Bubble Blade (16" Dia)	6	42.00
6100112	5/16" - Ripple Blade (16" Dia)	6	42.00
6100113	5/8" - 25 Flute Blade (16" Dia)	6	42.00

WP8000 Dealer Installed

WHITE PLANTERS

ORDER CODE	CATALOG NUMBER	DESCRIPTION	APPROX. WEIGHT (lb.)	LIST PRICE

ADDITIONAL EQUIPMENT — Optional

FERTILIZER OPENERS and ATTACHMENTS

Fertilizer Openers (Order One Per Two Row Units)

6100459	Double Disc Opener - 13-1/2" Dia.	75	803.00
6000525	Single Disc Fertilizer Opener - Liquid Injector (Requires Orifice Tip or Nozzle to Complete - Source Locally)		1,293.00
6000526	Single Disc Fertilizer Opener - Dry Side Knife		1,308.00
6000527	Single Disc Fertilizer Opener - Liquid Side Knife		1,293.00
6000534	Single Disc Fertilizer Opener (25 Wave) Liquid Trailing Knife with Multi Wave Blade		1,293.00
6000535	Single Disc Fertilizer Opener (25 Wave) Dry Trailing Knife with Multi Wave Blade		1,293.00
6000355	Single Disc Fertilizer Opener (50 Wave) Liquid Trailing Knife with Ripple Blade (Includes One Right and One Left Hand Coulter)	176	1,319.00
6000356	Single Disc Fertilizer Opener (50 Wave) Dry Trailing Knife with Ripple Blade (Includes One Right and One Left Hand Coulter)	186	1,319.00

Brackets for Fertilizer Openers - (Order One per Planter, unless otherwise noted)
SEE CHART for APPLICATIONS

6001150	Bracket Set for Single Disc Fertilizer Openers	28	122.00
6001171	Bracket Set for Single Disc Fertilizer Openers	108	554.00
6000609	Offset Shank Set for Single Disc Fertilizer Openers (Order One per Four Rows)	101	240.00
6001106	Fertilizer Opener Bracket Set (RH and LH) (Order One per Two Rows)		323.00

Bracket Chart for Single Disc Fertilizer Openers (Double Disc Openers do not Require Brackets)

MODEL	Without Tillage Attachments	Row Unit Mounted			Frame Mounted	
		Residue Mgr or Trash Master	Tillage Coulters Only	Tillage Coulters & Residue Mgr Combination	Tillage Coulters Only	Tillage Coulters & Residue Mgr Combination
8100	6001150	6001150	6001150	6001150	6001150	6001150
8180 (Dry Knife Requires Part # N852889, Adapter Tube)	6000609	6000609	6000609	6000609 (Only #6000526 & 6000527 Side Knife Can Be Used)	Can Not Be Used	
8202 and 8222	6000609, 6001106	6000609, 6001106	6000609, 6001106	Can Not Be Used	Can Not Be Used	
8600	6001150	6001150	6001150	6001150	6001150	6001150

Liquid Fertilizer Pumps — NOT FOR USE WITH SOME PLANTERS

2086019	Squeeze Pump, 6-Row	34	961.00
2086029	Squeeze Pump, 8-Row	55	1,441.00
2086039	Squeeze Pump, 12-Row	54	1,702.00
6001070	Single Piston Pump		2,097.00
6001069	Double Piston Pump		3,121.00
6001226	Contact Drive for Piston Pump (To Move Piston Pump from Planter Seed Drive to Contact Drive Tire System. For 8100, 8180)		790.00

ORDER CODE	CATALOG NUMBER	DESCRIPTION	APPROX. WEIGHT (lb.)	LIST PRICE

8800 Series Narrow Transport Folding Planter Fertilizer Bracket Chart

Brackets for Double Disc Fertilizer Openers

		Row Unit Mounted			Frame Mounted
Model	Without Tillage Attachments	Residue Mgr or Trash Master	Tillage Coulters Only	Tillage Coulters & Residue Mgr Combination	Frame Mounted Tillage Coulters Not Applicable
8816	(1) 6001215	(1) 6001215	(1) 6001215	(1) 6001215	
8824	(1) 6001216	(1) 6001216	(1) 6001216	(1) 6001216	

Brackets for Single Disc Side Knife Fertilizer Openers

		Row Unit Mounted			Frame Mounted
Model	Without Tillage Attachments	Residue Mgr or Trash Master	Tillage Coulters Only	Tillage Coulters & Residue Mgr Combination	Frame Mounted Tillage Coulters Not Applicable
8816	(1) 6001215 (4) 6001068	(1) 6001215 (4) 6001068	(1) 6001215 (4) 6001068	Can Not Be Used	
8824	(1) 6001216 (6) 6001068	(1) 6001216 (6) 6001068	(1) 6001216 (6) 6001068	Can Not Be Used	

ORDER CODE	CATALOG NUMBER	DESCRIPTION	APPROX. WEIGHT (lb.)	LIST PRICE
Fertilizer Opener Mounting Brackets (Order One per Planter)				
	6001215	16 Row Fertilizer Opener Mounting Brackets for 8816	340	3,097.00
	6001216	24 Row Fertilizer Opener Mounting Brackets for 8824		4,705.00
Offset Shanks (Order One for Four Rows)				
	6001068	Offset Shank Set for Single Disc Fertilizer Openers . . . . . (Liquid Side Knife)		240.00

WP8000 Dealer Installed

WHITE PLANTERS

ORDER CODE	CATALOG NUMBER	DESCRIPTION	APPROX. WEIGHT (lb.)	LIST PRICE

ADDITIONAL EQUIPMENT — Optional

MARKERS and ACCESSORIES

Markers (Less Marker Disc)

6001154	Rigid Marker for 8100 and 8700	208	1,236.00
6001155	Folding Marker for 8100 and 8700	383	2,719.00
6001156	Folding Marker for 8182	381	4,079.00
6001157	Folding Marker for 8186		5,438.00
6001282	Folding Marker for 8722		4,079.00

Marker Discs with Hub, Bearing, & Bracket

9010063	Solid Marker Discs for Rigid Marker	19	419.00
9010064	Solid Marker Discs for Folding Marker	30	425.00
6100094	Notched Marker Discs	30	458.00

Flat Fold Markers with Notched Marker Discs
(Includes Markers and Cylinders)

6001159	Flat Folding Markers with Marker Discs for 8108	950	5,554.00
6001160	Flat Folding Markers with Marker Discs for 8182 (Will not work with Granular Fertilizer Attachments)	931	8,034.00
6001161	Flat Folding Markers with Marker Discs for 8186 (New Design - Includes Break-Away & Gauge Wheels)	1392	10,712.00
6001169	Flat Folding Markers with Marker Discs for 8708	1000	5,447.00
6001170	Flat Folding Markers with Marker Discs for 8702	1000	6,110.00
6001204	Tri-Fold, Breakaway Markers w/ Marker Disc for 8202 & 8222		5,720.00
6000869	Tri-Fold Marker (8516 / 8524-20 / 8531) CF & F	1658	11,451.00
6001163	Tri-Fold Marker (8523 CF)	1000	5,720.00
6000870	Tri-Fold Marker (8524-22) CF & F	1658	11,590.00
6000999	Tri-Fold Marker with Marker Discs for 8816	1544	11,337.00
6001025	Tri-Fold Marker with Marker Discs for 8824	1544	16,068.00

ORDER CODE	CATALOG NUMBER	DESCRIPTION	APPROX. WEIGHT (lb.)	LIST PRICE

ADDITIONAL EQUIPMENT — Optional

MISCELLANEOUS

Miscellaneous Planter Components

NOTE: When mounting White Row Units on another manufacturer's toolbar, contact toolbar manufacturer for assembly instructions and list of components required.

6100014	Blower	58	1,348.00
6100095	Manifold Package (Includes transition for blower, elbows and air hoses to accommodate 13 row units. Additional components will be required depending on toolbar and row configuration.)	59	694.00
2087429	120-inch Air Duct	15	96.00
6001126	Seed Transmission for Row Unit Drive (Drive shafts not included)	66	918.00

Blower Drive for Air System
Seed Singling Blower Drive for Planters with one (1) Blower
NOT FOR HYDRAULIC DRIVE PLANTERS

6001047	540 RPM PTO Pump	37	1,524.00
6001048	1000 RPM PTO Pump for 1-3/8 inch Spline Shaft	34	1,678.00
6001049	1000 RPM PTO Pump for 1-3/4 inch Spline Shaft		1,678.00
2086049	Direct Drive (Uses Existing Tractor Hydraulics)	2	76.00

PTO Hydraulic Pump & Reservoir for Hydraulic Drive Planters

6000749	10 GPM PTO Pump with 6.4 Gallon Reservoir (for 8500 Series only) Requires PTO Adapter # 6000747 or 6000748 Requires some modification to mount to planters.		2,089.00
6001330	14 GPM PTO Pump with 8.5 Gallon Reservoir (for 8816 and 8824 only) Requires PTO Adapter # 6000747 or 6000748 Requires some modification to mount to planters.		2,089.00
6000747	1000 RPM Adapter for 1-3/4"		167.00
6000748	1000 RPM Adapter for 1-3/8"		167.00

WP8000 Dealer Installed

WHITE PLANTERS

ORDER CODE	CATALOG NUMBER	DESCRIPTION	APPROX. WEIGHT (lb.)	LIST PRICE

ADDITIONAL EQUIPMENT — Optional

MONITORS and ACCESSORIES

Monitors for Ground Drive Planters

6000805	SM100 Seed Flow Monitor (up to 8 Rows)	20	1,194.00
6000806	SM300 Seed Population Monitor (up to 8 Rows)	25	1,625.00
6000807	SM400SE Seed Population Monitor (12 and 16 Rows) (For 2007 and Later Model Ground Drive Planters)	25	2,324.00
6001214	Monitor Bridge Package (for 12 Row and more) (For use with Non ISO Ground Drive Planter Using a Tractor Equipped ISO Terminal / Monitor)		1,762.00

Monitors for Hydraulic Drive Planter (or Ground Drive with ISO System CE01)
(Requires 6000923 Radar Distance Sensing or 6100064 Radar "Y" Harness for Use on Tractor with Radar)

6001313	C1000 Terminal / Monitor		2,803.00
6000994	ISO Package for C2000 (For use when transferring an ISO C2000 from Combine)		1,580.00
6001396	C3000 Terminal / Monitor		5,299.00

Harnesses and Sensors

2087219	6 Row Harness for High Rate Sensors		295.00
2087229	8 Row Harness for High Rate Sensors		370.00
6000923	Radar Sensor (Gun)	15	1,049.00
6100059	Magnetic Sensor		160.00
6000988	Magnetic Sensor, 9772	4	194.00
6000955	Magnetic Sensor, 9776, 9792	4	194.00
6100064	Radar "Y" Harness (4 pin round tractor connector to 4 pin round monitor connector)		152.00

Note: Part # 72515753 - Radar "Y" Harness
(4 pin flat tractor connector to a 4 pin round monitor connector)
(Above Two "Y" Harnesses for tractors equipped with Radar Speed Sensing)

6100286	15 Ft Ext Harness for Magnetic Distance Sensor	2	50.00

Non-Current

Dealer Installed Equipment

8000 Series

These kits will be available through wholegoods until December 2014.
After that they will be sourced through AGCO parts.

Non-Current

WHITE PLANTERS

ORDER CODE	CATALOG NUMBER	DESCRIPTION	APPROX. WEIGHT (lb.)	LIST PRICE

These kits will be available through wholegoods until December 2014.
After that they will be sourced through AGCO parts.

Row Unit and Accessories

❖	6001240	Complete Row Unit with Seed Tube & High Rate Sensor . . Less Hopper / Meter Assy, Less Press / Closing Wheel Includes: Parallel Links, 15" Double Disc Opener, 4.5" x 16" Walking Beam Gauge Wheels, U-Bolts for 7x7 Toolbar, and One-Piece Mounting Bracket with Holes for Mounting Pneumatic Down Pressure		1,582.00
❖	6001151	Row Unit with Lock Up and with Sensor (Order 1 per Row) .		1,538.00
	6001138	Row Unit Lock Up Kit (Order 1 per Row).		205.00
	6001227	Row Unit Drive Chain Residue Shield . . . . . (Order 1 per Four Rows)		140.00
	6001190	Split Row Attachment for 8606 Planter only . . . . . Includes 5 Additional Row Units, U-Bolts, Lock-Up, Set Back Bracket, Seed Tubes, and High Rate Sensors Requires Seed Hoppers and Closing Wheels	1236	9,903.00
	6001286	Carbide Row Unit Disc Opener Scrapers . . . . . (2.5" (64 mm) (Kit for 4 Rows) (Order 1 per Four Rows)	2	115.00
	6001375	Rotary Disc Scraper (Order 1 per Row)		140.00

Press/Closing Wheels for Row Unit (Order One Per Row) (includes Brackets)

	6000803	Single “V” Trench Press Wheel	20	177.00
	6000778	Angled Rubber Closing Wheels	19	279.00
	6000779	Angled Cast Closing Wheels.	54	321.00
	6000929	Dual Angled Bracket Less Closing Wheels . . . . . (Order Closing Wheels, 6100103 or 6100101)		158.00

Down Pressure Springs for Row Unit (Order <u>One Per Two</u> Row Units)

	6100088	Standard Duty Down Pressure Springs (5 - 115 lbs). . . . . (Not Compatible with Row Unit Mtd Attachments)	7	125.00

❖ **Limited to Stock on Hand**

ORDER CODE	CATALOG NUMBER	DESCRIPTION	APPROX. WEIGHT (lb.)	LIST PRICE

These kits will be available through wholegoods until December 2014.
After that they will be sourced through AGCO parts.

Hopper / Meter Assembly for Row Unit (Order One per Row)

❖	6000820	2 Bushel Hopper and Meter Assembly	30	747.00
❖	6000821	3 Bushel Hopper and Meter Assembly (Not for use with Granular Herbicide - Insecticide Attachment)	35	876.00

Seed Hoppers (without Meter Assembly) (Order One per Row)
(Includes Hopper, Sealed Lid and Handle. Does not include hopper mounting hardware)

❖	6000753	2 Bushel Hopper	30	235.00
❖	6000754	3 Bushel Hopper	35	359.00
	6001002	Hopper Lid Storage Hook for 2 Bu Hoppers (Order 1 per Eight Rows) (Not for use with Auto Row Shut-Off option - Single or Double Row Controlled clutches)		118.00

Cover and Meter Assembly (Order One per Row unless Otherwise Noted)

	6000937	CFS Meter Cover and Meter Assembly for Row Unit	30	531.00
	6000938	Cover, No Meter (for converting 2 or 3 Bushel Hoppers)		133.00
	6000941	CFS Meter Screen - Small Seed (Central Fill Planters) (Order one per eight rows) (For use when planting seed smaller than 3/16" in diameter)		193.00

Displays

❖	6000577	Table Top Display Unit, 2 Bushel Hopper and Meter (Order Hopper Decal Left Side, #700729083 from Service Parts)		3,080.00
❖	6000603	Table Top Display Unit, 3 Bushel Hopper and Meter (Order Hopper Decal Left Side, #700729083 from Service Parts)		3,089.00

Miscellaneous

	6001050	Two Additional Wing Gauge Wheels for 8824 (255/70R22.5, 16 Ply) (For use with standard 8 wheels)		6,264.00

❖ **Limited to Stock on Hand**

Non-Current

WHITE PLANTERS

ORDER CODE	CATALOG NUMBER	DESCRIPTION	APPROX. WEIGHT (lb.)	LIST PRICE

These kits will be available through wholegoods until December 2014.
After that they will be sourced through AGCO parts.

Row Unit Mounted No-Till Coulters (Order One Per Row)

	Heavy Duty Down Pressure Springs or Pneumatic Down Pressure System Recommended		
6000528	Row Unit Mounted Coulter w/ Bubble Blade (16" Dia)	41	298.00
6000529	Row Unit Mounted Coulter w/ Ripple Blade (16" Dia)	41	298.00
6000530	Row Unit Mounted Coulter w/ 8 Flute Blade (16" Dia)	37	298.00
6000531	Row Unit Mounted Coulter w/ 7/8" - 13 Flute Blade	37	307.00
6000932	Row Unit Mounted Coulter w/ 25 Flute Blade (16" Dia) . . .		307.00
6000532	Trash Masters - 12-inch Solid Blades	34	356.00

Residue Manager (Order One per Row)

6001333	Floating Residue Manager - SharkTooth® Wheel . . . . . . With Depth Band, 13-inch Steel Wheel with 12 Teeth For use without Tillage Coulter		546.00
6001334	Floating Residue Manager - SharkTooth® Wheel . . . . . . Without Depth Band, 13-inch Steel Wheel with 12 Teeth For use without Tillage Coulter		466.00
6001332	Floating Residue Manager - Finger Wheel.		434.00
6000533	Residue Manager (Includes Bearing Shields) . . . . . . 13-inch Steel Wheel with 16 Fingers For use without Tillage Coulters	37	373.00
6001284	Residue Manager SharkTooth® Wheel . . . . . . 13-inch Steel Wheel with 12 Teeth For Use without Tillage Coulters		403.00
6000757	Residue Manager Attachment . . . . . . 13" Steel Wheel with 16 Fingers (For Row Unit Mounted Coulters Only) Includes Bearing Shields (Required Heavy Duty Down Pressure Springs) (Not for Use with 8524-20 Planter)	42	329.00
6000720	Residue Manager Attachment . . . . . . 10" Steel Wheel with 16 Fingers (For Row Unit Mounted Coulters Only) Includes Bearing Shields (Requires Heavy Duty Down Pressure Springs) (Not for Use with 8524-20 Planter)	42	329.00

ORDER CODE	CATALOG NUMBER	DESCRIPTION	APPROX. WEIGHT (lb.)	LIST PRICE

These kits will be available through wholegoods until December 2014.
After that they will be sourced through AGCO parts.

Frame Mounted Spring Cushion No-Till Coulters (Order One per Row)
Includes U-Bolts (Not for use on 8300 or 8500 Series Planters)

6000312	7/8" - 13 Flute Blade (16" Dia) (for 7" x 7" Frame)		396.00
6000335	7/8" - 8 Flute Blade (16" Dia.) (for 7" x 7" Frame)	55	396.00
6000336	¾" - Bubble Blade (16" Dia.) (for 7" x 7" Frame)	56	396.00
6000139	5/16" - Ripple Blade (17" Dia.) (for 7" x 7" Frame)	56	396.00
6000933	25 Flute Blade (16" Dia.) (for 7" x 7" Frame)		396.00

Frame Mounted Strip-Ridge Till Coulters (Order One Per Row)
Includes U-Bolts (Not for use on 8300 or 8500 Series Planters)

6000314	7/8" - 13 Flute Blade (16" Dia.) (for 7" x 7" Frame)		584.00
6000339	7/8" - 8 Flute Blade (16" Dia.) (for 7" x 7" Frame)	74	584.00
6000340	¾" - Bubble Blade (16" Dia.) (for 7" x 7" Frame)	75	584.00
6000147	5/16" - Ripple Blade (17" Dia.) (for 7" x 7" Frame)	75	584.00
6000935	25 Flute Blade (16" Dia.) (for 7" x 7" Frame)		584.00

Markers

6001162	Bi-Fold Marker with Marker Discs (8523F)	1000	4,868.00
6000871	Tri-Fold Marker with Marker Discs (8524-30) CF & F	1658	10,793.00
6001158	Rigid Marker (8606) (Requires Marker Discs)	250	1,042.00
6001167	Rear Folding Marker with Marker Discs (8788)		7,201.00
6000901	Tri-Fold Marker with Marker Discs for 8831 (Includes Marker Set-Back Brackets)	2167	10,832.00

Harnesses and Sensors

6001229	Magnetic Sensor, 8816, 8824		185.00
6000956	Magnetic Sensor, 8342	4	179.00
9900029	Magnetic Sensor, 8606	4	147.00
6001397	Integrated Monitor Switch, 8202, 8222, 8816, 8824		550.00

Monitor

6001087	SM400SE Seed Population Monitor, Ground Drive Planters. (Includes High Power Harness)	25	2,351.00

ORDER CODE	CATALOG NUMBER	DESCRIPTION	APPROX. WEIGHT (lb.)	LIST PRICE

These kits will be available through wholegoods until December 2014.
After that they will be sourced through AGCO parts.

Pneumatic Down Pressure - Order One per Planter - Requires 6001290 Compressor Below

6001341	Pneumatic Down Pressure for 8200 series	340	2,534.00
6001368	Pneumatic Down Pressure for 8776	500	3,379.00
6001367	Pneumatic Down Pressure for 8792	340	2,534.00
6001364	Pneumatic Down Pressure for 8816	340	3,379.00
6001365	Pneumatic Down Pressure for 8824	500	4,998.00
6001290	Pneumatic Down Pressure Compressor	20	795.00

Pneumatic Down Pressure - Order One per Planter - INCLUDES Compressor

6001287	Pneumatic Down Pressure for 8816	340	3,898.00
6001288	Pneumatic Down Pressure for 8824	500	5,410.00

Point Row Shut-Off Clutches

6000512	Point Row Shut-Off Clutches (8500 series) (Includes Control Box and 3 Clutches) (Not for use with Automatic Row Shut-Off	52	2,943.00
6001145	Point Row Shut-Off Clutches (8831) (Includes Control Box and 3 Clutches) (Not for use with Automatic Row Shut-Off	52	3,302.00

Seed Drive Implement Switch

6001080	Seed Drive Disconnect - Implement Lift Switch (For Hydraulic Drive only) *(For Use with 2008 Model Year)*	4	194.00

ORDER CODE	CATALOG NUMBER	DESCRIPTION	APPROX. WEIGHT (lb.)	LIST PRICE

These kits will be available through wholegoods until December 2014.
After that they will be sourced through AGCO parts.

Granular Herbicide - Insecticide Attachment (Order One Per Two Row Units, Unless Otherwise Noted)
NOT FOR USE WITH THREE BUSHEL HOPPERS

❖	6001211	Granular Insecticide Attachment (includes 7" spreader) . . . . (Requires Row Unit Frame Extension) (Not compatible with Flex Shaft Seed Meter Drive)		836.00
❖	6001212	Granular Herbicide Attachment (includes 14" spreader) . . . . (Requires Row Unit Frame Extension)	51	733.00
❖	6001213	Granular Herbicide - Insecticide Attachment . . . . . (includes 7" and 14" Spreader, 70 lb. Hopper, and LH Metering Unit) (Requires Row Unit Frame Extension)	75	1,058.00
	6001139	Row Unit Frame Extension w/ Step Plate . . . . . (Order one per Row) (Required with # 6001211, 6001212, or 6001213)	12	145.00

Additional Granular Herbicide - Insecticide Components (Order One Per Two Row Units)

	9000036	Spring Tine Incorporator	17	172.00
	6001128	14-inch Herbicide Spreader . . . . . (To Convert Insecticide Attachment to Herbicide)	6	118.00
	6001127	Left Hand Metering Unit . . . . . (To Convert Herbicide Attachment to Herbicide - Insecticide)	11	253.00

NOTE: To Convert Insecticide Attachment to Herbicide - Insecticide requires both #6001128 & #6001127.

Liquid Fertilizer Squeeze Tube Pump

	6001278	(2) Low Pressure Squeeze Tube Pump & Drives, 16 Row. .	325	4,479.00

❖ **Limited to Stock on Hand**

RESERVED

MASSEY FERGUSON®

Technology

Quick Reference Guide for Ordering AUTO-GUIDE 3000

AUTO-GUIDE 3000 IS ONLY AVAILABLE ON THE FOLLOWING:

❶Model Year 2013 and Newer Massey Ferguson and Challenger Tractors

❷Model Year 2012 and Newer SP Windrowers

❸Combines Using the C2100 Monitor

❹RG700 Sprayers

IMPORTANT: ALL VEHICLES MUST BE FACTORY "GUIDANCE READY"
WATCH BULLETINS FOR FURTHER RELEASES

For Guidance Ready Vehicles

(Based on Product: The Following Items must be Ordered to Complete a Base Steering System)

HHP Wheeled or Track and Articulated Tractors, SP Windrowers, and RG700 Sprayers

1. ACZ000039PM - AUTO-GUIDE 3000 SubMeter Steering System (uses vehicle terminal, C1000)

Combines

1. ACZ000039PM - AUTO-GUIDE 3000 SubMeter Steering System (uses vehicle terminal, C2100)
2. 71441601M - Remote Antenna Option ***REQUIRED***

Note: For Additional Resources; Please see seperate items listed on following page or log into www.oneagco.com then go to oneAGCO Document Center/ My ATS Documents

---

For WR Series SP Windrowers not ordered with Factory Installed AUTO-GUIDE 3000

(Based on Product: The Following Items must be Ordered to Complete a Base Steering System)

SP Windrowers (WR Series)

1. ACZ000039PM - AUTO-GUIDE 3000 SubMeter Steering System (uses vehicle terminal, C1000)
2. 700960387M - AUTO-GUIDE 3000 Installation Kit (*wide cab SP Windrowers*)

   -or-

3. 700960388M - AUTO-GUIDE 3000 Installation Kit (*narrow cab SP Windrowers*)

***Note: If no Auto-Guide Rocker Switch is present in the Windrower cab, follow the 2012 upgrade instructions.**

2012 SP Windrowers (WR Series) - UPGRADE INSTRUCTIONS:

If no Rocker Switch is present in the cab, order the two kits below in addition to above listed requirements:

4. 72571047 - AUTO-GUIDE 3000 Rocker Switch
5. 700743763 - AUTO-GUIDE 3000 Wiring Harness

Note: For Additional Resources; Please see seperate items listed on following page or log into www.oneagco.com then go to oneAGCO Document Center/ My ATS Documents

Field Install Technology

Catalog Number	Description	List Price

AUTO-GUIDE 3000 - Submeter Only

Available to receive WAAS or OmniStar VBS correction signal (VBS requires annual Subscription from OmniStar)

ACZ000039PM	AUTO-GUIDE 3000 Submeter System . . . . . **Price Includes:** AUTO-GUIDE 3000 Receiver Receiver to Roof Connector Harness Roof mounting plate English operator manual	6,500.00

FOR TRANSLATED MANUALS - ORDER THROUGH PARTS DEPARTMENT

ACZ000080A	Spanish operator manual	Order From Parts
ACZ000082A	French operator manual.	Order From Parts

AUTO-GUIDE 3000 - Decimeter Upgrade

Add to ACZ000039PM to make AUTO-GUIDE 3000 Submeter System able to accept OmniStar XP and HP correction signals with subscription from OmniStar

ACZ000038PM	AUTO-GUIDE 3000 Decimeter Snap-in module . . . . . **Price Includes:** AUTO-GUIDE 3000 Decimeter Snap-in module English operator manual	2,199.00
71441601M	Remote Antenna (Required for Combines)	1,117.00

FOR TRANSLATED MANUALS - ORDER THROUGH PARTS DEPARTMENT

ACZ0002430	Spanish operator manual	Order From Parts
ACZ0002450	French operator manual.	Order From Parts

AUTO-GUIDE 3000 - Centimeter Upgrade

Add to ACZ000039PM to make AUTO-GUIDE 3000 Submeter System along with ACZ000038PM - AUTO-GUIDE 3000 Decimeter Snap-in module, to make AUTO-GUIDE 3000 able to use RTK Base Station (Listed Below) and some COORS Networks

ACZ000062PM	AUTO-GUIDE 3000 Centimeter Snap-in module . . . . . **Price Includes:** AUTO-GUIDE 3000 Centimeter Snap-in module Rubber Antenna Kit English operator manual	4,051.00
71441601M	Remote Antenna (Required for Combines)	1,117.00

FOR TRANSLATED MANUALS - ORDER THROUGH PARTS DEPARTMENT

ACZ0002580	Spanish operator manual	Order From Parts
ACZ0002600	French operator manual.	Order From Parts

Field Install Technology

MASSEY FERGUSON®

Catalog Number	Description	List Price
AUTO-GUIDE 3000 Miscellaneous Accessories		
59110M	Tripod TP-100 Heavy Duty with Aluminum Extendable Legs	95.00
AGA4094M	HiPer AG Mobile Base GPS + GLONASS 900mhz Radio	8,950.00
700960387M	Wide Cab SP Windrower AUTO-GUIDE 3000 Installation Kit (WR Series only)	346.00
700960388M	Narrow Cab SP Windrower AUTO-GUIDE 3000 Installation Kit (WR Series only)	445.00
72571047	Rocker Switch for 2012 SP Windrowers	Order From Parts
700743763	Wiring Harness for 2012 SP Windrowers	Order From Parts
4390411M12	Harness to add C3000 Monitor to a 2013 and newer Large Frame HHP Wheel Tractors (NOTE: ORDER IN ADDITION TO C3000)	Order From Parts
573371D1	Harness to add C3000 Monitor to a 2013 and newer Track Tractor (NOTE: ORDER IN ADDITION TO C3000)	Order From Parts
ACZ000000B	C3000 Monitor only	Order From Parts

Mississippi State Contract Discount: 5%

Field Install Technology

Catalog Number	Description	List Price

AGCOMMAND Module (For Combines, SP Windrowers, Balers, Tractors, RG/TG)

ACZ0001800M	AGCOMMAND Unit - Standard Plus, 1 Year . . . . . **Price Includes:** AM50 AGCOMMAND Module (For use on ALL AGCOMMAND Ready Vehicles) 1 year subscription to Standard Plus (Available after Dealer Activation)	1,280.00
ACZ0002200M	AGCOMMAND Unit - Advanced, 1 Year . . . . . **Price Includes:** AM50 AGCOMMAND Module (For use on ALL AGCOMMAND Ready Vehicles) 1 year subscription to Advanced (Available after Dealer Activation)	2,045.00

AGCOMMAND Installation Kit

539686D1	Field Install Kit, Less AGCOMMAND Module . . . . . **Price Includes:** Mounting Hardware for Module and Antenna to install AGCOMMAND on Challenger MT - 7XX, 8XX, and 9XX (Order with Addition to Module Above)	135.00
700179375	Field Install Kit, Less AGCOMMAND Module . . . . . **Price Includes:** Mounting Hardware for Module and Antenna to install AGCOMMAND on AGCOMMAND ready Large Square Balers (Order with Addition to Module Above)	Order From Parts

AGCOMMAND - Universal Kit

72570238M	Universal Field Kit	164.00

SUBSCRIPTION EXTENSIONS FOR AGCOMMAND UNITS

(TO EXTEND SUBSCRIPTION AFTER FIRST YEAR)

AGCOMMAND - Subscription Extension - Standard Plus

72571813M	Subscription Fee - AGCOMMAND Standard Plus - 1 year	399.00

AGCOMMAND - Subscription Extension - Advanced

72571816M	Subscription Fee - AGCOMMAND Advanced - 1 year	950.00

AGCOMMAND - Upgrade from Standard Plus to Advanced

To Upgrade from Standard Plus to Advanced order 72571816M Subscription Fee - AGCOMMAND Advanced - 1 year.
This upgrades the system to Advanced for one year from date of upgrade purchase.

RESERVED