MAYLINE®

www.mayline.com

CORPORATE LOCATION

MAYLINE
619 N. COMMERCE STREET
PO BOX 728
SHEBOYGAN, WI 53082-0728
CUSTOMER SERVICE 800-822-8037
920-457-7388 (FAX)
customerservice@mayline.com

TO PLACE ORDERS:
MAYLINE
ATTN: ORDER DESK
PO BOX 728
SHEBOYGAN, WI 53082-0728
800-822-8037
920-457-7388 (FAX)
orderdesk@mayline.com

DISTRIBUTION CENTER

ARKANSAS
824 NORTH PALM STREET
NORTH LITTLE ROCK, AR

SHOWROOM LOCATIONS

ATLANTA
2030 POWERS FERRY RD., SUITE 230
ATLANTA, GA
770-984-9047

BOSTON
850 SUMMER STREET
BOSTON, MA
617-269-7600

CHICAGO
MERCHANDISE MART, SUITE 1147
CHICAGO, IL
847-952-1213

CINCINNATI
2226 GILBERT AVENUE
CINCINNATI, OH
513-221-4800

DALLAS
1109 QUAKER STREET
DALLAS, TX
817-715-2941

DENVER
WELLS FARGO BUILDING
333 S. BANNOCK ST., SUITE 310
ENGLEWOOD, CO
720-635-7893

DETROIT
2384 FRANKLIN ROAD
BLOOMFIELD HILLS, MI
248-745-9990

HOUSTON
1213 WEST LOOP NORTH #160
HOUSTON. TX
281-829-1432

LOS ANGELES
12015 MORA DR., UNIT 1
SANTE FE SPRINGS, CA
562-903-7090

NEW JERSEY
HOBOKEN BUSINESS CENTER
50 HARRISON STREET, SUITE 113
HOBOKEN, NJ
212-684-7788

NORTHERN CALIFORNIA
2528 QUME DR., SUITE 6
SAN JOSE, CA
925-786-0178

PORTLAND
5331 SW MCADAM AVE, SUITE 375
PORTLAND, OR
503-222-2364

ST. LOUIS
3204 MORGAN FORD ROAD
ST. LOUIS, MO
314-771-6696

SEATTLE
829 S. FIDALGO
SEATTLE, WA
206-767-0412

TORONTO
210 PONY DRIVE, UNIT 2
NEWMARKET, ONT
CANADA
905-830-0247

VANCOUVER
110-4611 #6 ROAD
RICHMOND, BC
CANADA
604-272-4401

WASHINGTON D.C.
9000 VIRGINIA MANOR ROAD
SUITE 210
BELTSVILLE, MD 20705
301-408-0600

©2015 Mayline Company, LLC
PLMG 01/15

MAYLINE®

JANUARY 2015 PRICE LIST

MAYLINE®

Price List

Effective January 1, 2015

(Supercedes April 2013 Price List and June 2014 Price List Addendum)

ALL PRODUCT SHIPS *FREE FREIGHT!

* See Shipping and Freight Allowance Program in Terms & Conditions.

MAYLINE® *Price List Terms & Conditions Effective January 1, 2015*

Mayline

619 North Commerce Street • P.O. Box 728 • Sheboygan, WI 53081-0728
Ph. 800-822-8037 • (In Wisconsin, call 920-457-5537) • Fax: 920-457-7388
Web Site: www.mayline.com
Remittance Address: Mayline • PO Box 3090 • Milwaukee, WI 53201

Terms

With approved credit, 1% 15 days from date of invoice or net 30 days. Cash discount applies against billing date and cannot be taken against freight charges. Past due accounts are subject to interest at the maximum rate permitted by law. Cash discount does not apply to credit card orders.

Pricing & Product Specifications Policy

This Price List is effective as of January 1, 2015. Please visit www.mayline.com for periodic updates to the pdf version. Prices and specifications are subject to change without notice. Pricing shall be based upon the price list in effect at the time the order is entered. Mayline reserves the right at any time to alter design, and to substitute materials and parts to a particular standard unit at time of shipment as may be necessary. In response to changing customer demands and to maintain the market appeal of our products, materials, color, fabric, finishes, etc. may be updated periodically and are subject to change without notice.

Taxes

All prices shown in this price book are exclusive of sales, use, excise and other applicable taxes and are the dealer/purchasers responsibility per the invoice issued by Mayline.Resale and/or exemption certificates are required for the state in which the purchaser is located. In the event the Seller is not registered to collect sales tax in the state of the Purchaser, the Purchaser is required to remit any applicable sales tax to its state and local taxing authority.

How To Order

Send orders to the attention of Order Desk at orderdesk@mayline.com, and include for every item ordered:

- Quantity
- Model Number and Description
- Laminate Color
- Paint Color
- Fabric Color (if necessary)

All orders will be confirmed via acknowledgement. It is the dealer's responsibility to review the confirmation to insure order accuracy. Laminate and Paint colors can be viewed at www.mayline.com.

Changes, Cancellations, and Custom Orders

All changes or cancellations to orders are subject to Mayline's approval. For standard product orders already in production, approved changes are subject to modification surcharges and approved cancellations are subject to invoicing for up to the full amount of products already in production and cancellation surcharges for remaining items.

In the event the customer requests a delay in shipment from the original scheduled ship date, storage charges for completed product may apply.

Because of the unique nature of e5, Mobile Aisle, 4-Post Shelving, all high-density filing products, Mailflow Systems and upholstered seating orders, these product lines are, all NON-CANCELLABLE AND NON-RETURNABLE.

All custom orders for non-standard products are subject to minimum order quantities, upcharges, and extended lead-times. Please contact Mayline for details. Custom orders are NON-CANCELLABLE AND NON-RETURNABLE. This also applies to all products not utilizing our standard corporate laminate program.

Custom Finishes

Requests for custom finishes are subject to approval by Mayline. Upcharges, minimum order quantities, and extended lead-times may apply.

Custom Laminates: For non-standard, high-pressure laminates, a minimum order quantity (per laminate) of 5 units and a $50 net/unit upcharge applies.

Custom Paints: For non-standard paint finishes, the order must have a minimum size of $5,000 list. The upcharge is 10% of net, with a minimum order charge of $400 net and maximum charge of $2,000 net.

Shortages and Damage

Mayline will be responsible for filing claims, in their name, for damaged or lost freight and sending out replacement orders at NO CHARGE under the following conditions:

1. Product is shipped via a Mayline specified common carrier.
2. Noticeable damage to the carton or product, and/or missing product must be noted on the delivery receipt. Brief descriptions of the damage are also necessary, i.e. "two File Harbor cabinets damaged near top front, and one C-File carton punctured."
3. All product and packaging must be saved for 30 days to allow carrier to inspect or pick up.
4. The dealer must call Mayline at 1-800-822-8037 to report the damage or shortage situation to Customer Service.

For cases of concealed damage, Mayline will take responsibility for placing the freight claim under the following conditions:

1. Product is shipped via a Mayline specified common carrier.
2. Damage is reported to the carrier and Mayline within 7 calendar days of receipt.
3. Replacement orders will be sent out at a charge.
4. Mayline will credit the dealer 2/3 of the invoice amount for the product (responsibility: 1/3 to carrier, 1/3 to Mayline, and 1/3 to dealer).

If the dealer specifies their own carrier, they assume full responsibility for any freight claims. This includes collect and 3rd party billing shipments. Under these circumstances, replacement orders will be sent out at a charge.

Returns

All merchandise requested to be returned to the originating manufacturer must first be approved and issued a ***Return Goods Authorization (RGA)*** number. Please contact the customer service department for an authorized return goods number. All returned product must be packed in original cartoning, unused, and in sellable condition. Only product shipped from the originating manufacturer within the past 30 days may be returned. All product must be returned within 30 days of return authorization date or RGA will be cancelled. **e5, Mobile Aisle, Upholstered Seating, 4-Post Shelving, all high-density filing products, and Mailflow Systems products are considered custom and cannot be returned.**

All authorized RGA/Returns will be assessed the following:

- 30% refurbishing charge will be applied on all authorized returns for merchandise received in resalable condition.
- Customer is required to make the shipping arrangements for the return and is responsible for all return freight costs.
- RGA/Returns will be debited the original freight cost that was incurred as part of the original sale, as it is now a voided sale of product.
- All items purchased from wholesale distribution must be returned through the wholesaler and not Mayline.

Products returned to Mayline without **Return Goods Authorization (RGA)** are assessed original freight charges and all return costs. RGA terms and guidelines are applied. *In some instances a debit balance may be due from the dealer/wholesaler if costs exceed product amount.

All information provided by Mayline Company, LLC ("Mayline") in any form, is propriety information.

DELIVERY PROGRAMS:

FAST Freight

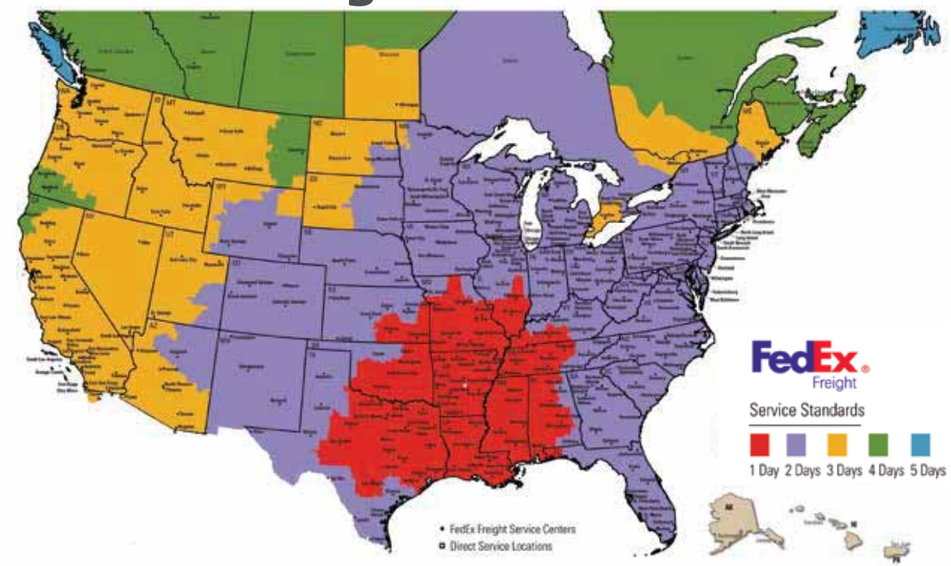

Mayline's *FAST* Freight delivery program is the closest thing to having a private warehouse in your own back yard. Hundreds of products are now available from our Arkansas distribution center so you can **receive them the next day** in many cities. We have partnered with FedEx Freight and other LTL carriers to provide exceptional customer service AND it's all available at no additional cost.

QUICK-SHIP

Mayline offers hundreds of standard items on our 72-hour Quick-Ship program. Contact Customer Service at 800-822-8037 with any questions.

LIMITED LIFETIME WARRANTY – Effective January 1, 2015

Mayline promises to repair or replace any Mayline brand product or component that is defective in material or workmanship for as long as the original purchaser owns it. This is the sole and exclusive remedy. This warranty is subject to limitations, exclusions and other provisions detailed below.

Limitations involving materials and components:

The materials and components listed below are covered according to the following schedule from the date of sale:

Ten Years: Seating controls, cylinders, wood seating components.

Five Years: Fabric and leather seating upholstery, seating foam, seating armrests, chrome seating components, veneer finishes, and any shelving, cabinets, or mobile systems and components that are either moving parts, or controls and guides that are in contact with moving parts. All e5.

Three Years: 4-Post wire shelving and wire components, electrical components, and casters.

Exclusions:

This warranty does not apply to:

- Normal wear and tear, from standard use over the course of ownership.
- Damage caused by the carrier in-transit, which will be handled under Mayline's Freight Damage policy.
- Modifications or attachments to the product that are not approved by Mayline.
- Products that were not installed, used or maintained in accordance with product instructions and warnings.
- Products used for rental purposes.
- COM fabric is not covered under this warranty.
- Abuse, misuse of product, or accidents.

Seating Usage:

Normal commercial usage for seating is to be defined as the equivalent of a single shift within a 40-hour workweek. To the extent that a seating product is used in a manner exceeding this, the applicable warranty period will be reduced in a pro-rata manner *(excluding Model 2424AG which is warranted for multiple shifts).*

The Event Series:

Mayline will warrant the materials and components of The Event Series products for a period of five years. The warranty does not apply to normal wear and tear, damage caused by the carrier in-transit, modifications or attachments to the product, or where the product is not installed. This product must be used or maintained in accordance to the instructions. See specific table labels for maximum weight load capacities. These limits are based on the weight being evenly distributed, allowing for ¼" deflection. This warranty does not cover any products used for rental purposes.

Note: *Some natural variations occurring in wood or leather materials are inherent in their character, and cannot be avoided. Mayline does not warrant the color-fastness or matching of colors, grains, or textures of such materials.*

TO THE EXTENT ALLOWED BY LAW, MAYLINE MAKES NO OTHER WARRANTY, EITHER EXPRESSED OR IMPLIED. MAYLINE WILL NOT BE LIABLE FOR ANY CONSEQUENTIAL OR INCIDENTAL DAMAGES.

Terms & Conditions *continued*

Customer's Own Material (C.O.M.)

For C.O.M. orders, please contact our Customer Service Department for details and restrictions for laminates and fabrics not provided by us.
Refer to C.O.M. terms and conditions and the C.O.M. Order Form at the end of this Price List or contact customerservice@mayline.com.

*Shipping and Freight Allowance Program

All products ship via select common carrier f.o.b. shipping point (origin), with freight charges prepaid by Mayline. This is for dock-to-dock and FedEx Ground shipments only. These terms apply to shipments within the 48 contiguous states. Any accessorial charges for lift gate, inside delivery, call-in-advance, etc., are the responsibility of the dealer. If dealers are requesting shipments with a third party carrier or will-call, an extra 10% discount will be applied to the order and 3rd party account number will be required.

U.S.-billed dealers shipping into Canada will pay all freight charges dock-to-dock and must also provide their own broker and pay any fees or associated taxes. As a result of the dealer paying the freight, third party bill only, they will be allowed an additional 10% discount off of their standard discount. If Mayline provides the carrier and broker, the dealer will be charged for exact freight charges, plus a $75 broker fee, and associated taxes.

All orders from **Gold dealers** will be covered under this policy regardless of order size. Purchase orders must reflect January 1, 2015, list pricing with standard discount.

Orders from **Silver and Bronze dealers** will ship free on purchase orders of $2,500 current list or more (also using January 1, 2015, list prices) with standard discount. Orders less than $2,500 current list will incur a $75 fee for LTL shipments or $15 for small parcel shipments.

Accessorial Charges

Requests for inside delivery and lift gate/tailgate services should be included on original purchase orders and are subject to approval by Mayline. A $75 charge for inside delivery and $100 for lift gate/tailgate will be added to the invoice. Additional charges may apply based on order volume. Contact Customer Service for a quote.

In the event that inside delivery and/or lift gate/tailgate services are unforeseen, but required to complete the delivery, both the dealer and Mayline must agree to these services and subsequent invoicing by Mayline of the charges described above.

Inside delivery is defined as when carrier moves all or part of a shipment to a position beyond the point directly accessible or immediately adjacent to the delivery vehicle.

If a consignee is responsible for causing a re-delivery, a $50 charge will be invoiced.

Other special services will be billed at actual charges, including but not limited to:

- Storage
- Call Before Delivery
- Extra Labor
- Residential Zoned Delivery
- Driver Assist
- High Cost/Remote Region Delivery (i.e. New York City)
- Guaranteed Timekeeper Delivery

Will Call Program

Will Call services will be provided at our distribution center (Little Rock, AR). Customers picking up their products utilizing this program will receive an additional 10% discount. Program details:

- In-stock products will be available to pick up 24 hours after receipt of acknowledgement.
- Hours of pick up are 6:30 am to 4:30 pm, Monday-Thursday. 6:30 am to 2:30 pm Friday.
- Customer must specify the pick up time and date on all Will Call orders.
- If the customer does not specify a date and time, the order will go into "pending" status and not be available for shipment until a written date and time are provided.
- Orders not picked up within 48 hours of the specified time and date will be subject to a restock charge and/or cancellation of the order.

Trademarks

Aberdeen, C-File, Communication Station, Commute, Corsica, Flip-N-Go, Mailflow Systems, Mayline, Maytrix, Napoli, Ranger, Santa Cruz, Talon, TechWorks, and VariTask are all registered trademarks of Mayline.

ARC, Cohere, CSII, e5, eLan, Encounter, Flip-N-File, Gist, Keep, Medina, Meeting Plus, Mercado, Mobile 1000, Mobile Aisle, Mobilizers, NetStart, Sync, T-Mate, TranasAction, Ultimo, and Valoré are unregistered trademarks of Mayline.

Copyright

All catalogs, images, drawings, price lists and other printed material are protected by copyright. All rights reserved.
© 2015 Mayline Company, LLC is a registered trademark of Mayline.

Warranty Information

Refer to inside back cover for our warranty details.

Key to the ICONS Used Throughout:

FAST Freight = *FAST* Freight Program

QUICK-SHIP = 72-Hour Quick-Ship Program

= Corporate Color Program

GSA = Product on GSA Schedule

GIZA/CAP = GIZA/CAP

= Intertek Green Leaf VOC+ Certified

What's New in This Price List

Price Increase

1. This Price List is effective January 1, 2015, with pricing reflecting a 4-4.5% price increase on most product lines with the exception of:
    a. Medina, Keep, Gist, RGE, S/E Cabinet, new monitor posts/arms, LED Task Lights and new lateral files will have *no price increase*.
    b. Luminary and Mira veneer products will also have *no price increase*.
    c. List Prices for all other product lines reflect a 4% or 4.5% price increase.
2. This Price List supersedes the April 2013 Price List and also the June 2014 Price List Addendum.

Terms & Conditions

1. Minor revisions in the Terms & Conditions section as well as moving the categories into different order.
2. Further clarification added to the Returns section.

Warranty

1. Warranty section has moved to the inside back cover and edits made to the limitations involving materials and components section.

Terminology Changes

1. KWIK-SHIP term discontinued – Now QUICK-SHIP
2. REAL OFFICE name discontinued – Refer to DESKS AND STORAGE
3. KWIK-FILE name discontinued – Now MAYLINE
4. VARITASK name discontinued – Now HEIGHT-ADJUSTABLE
5. FOUR-POST shelving consistently referenced as 4-POST shelving
6. X-RAY shelving now referenced as HEAVY-DUTY shelving

Product Category Names are revised to match www.mayline.com
(Reference Table of Contents)

1. Workspaces (was Desking)
2. Desks and Storage (was Casegoods)
    a. Discontinuing use of REAL OFFICE name.
3. Tables (was Conference and Training Tables)
4. Seating (same)
5. High-Density Storage (was Storage and Filing)
6. Mailroom Furniture now own section (was in Specialty Solutions)
7. Technology Furniture now own section (was in Specialty Solutions)
8. Drafting Furniture now own section (was in Specialty Solutions)
9. Event Series Chairs and Tables moved into appropriate categories (Seating and Tables)

PRODUCT LINE UPDATES

Workspaces

1. Several enhancements to our e5™ product line:
    a. e5 Quick-Ship Program Typicals – Ready to ship in 3 business days!
    b. e5 Quick-Ship Program - Pick 3 or More Components
    c. e5 Idea Starters (*not on Quick-Ship*)
    d. Above-surface fabric tack panels
    e. Productivity area options (end-of-run)
    f. Meeting half-round table kits
    g. Freestanding storage options (wardrobe towers and bookcases)
    h. Sliding doors as option on overhead cabinets
    i. Additional Wardrobe Storage Towers (available in either Left or Right handed)
2. CSII® - New Lateral Files now available (4 colors)
3. Keep™ Modular Wall (patent pending) Storage-wall solution enhances productivity by providing ready access to materials, dividing space and enhancing privacy.
    a. Keep Typicals and Keep Series Build-a-Wall Starter and Adder Options
4. Ergonomics:
    a. New monitor support arms available
    b. New LED Task lighting options include Desktop and under cabinet options

Desks and Storage (Wood Laminate and Veneer Casegoods)

1. Revised order of product listing with Laminate Series first, then Veneer Series
2. Phasing out the use of REAL OFFICE brand name.
3. Medina™ Laminate series private office and conference merged into this price list. Since launched in June 2014 we have added the following to the Medina line:
    a. 12’ and 14’ foot conference tables
    b. Reception station
    c. Straight desk, Return and Bridge options (available April 2015)
    d. 4 new Typicals – MSNT39, 40, 41, 42
4. Napoli® Veneer series – 4 New Typicals - NT43, 44, 45, 46
5. Discontinued: All Toscana desks and storage elements
6. Discontinued: Corsica lateral file CLF and Corsica bookcase quarter round 5-shelf (VBQ5)
7. Several other Napoli, Corsica, Aberdeen, Sorrento, Luminary, Mira and Brighton components are now discontinued (*refer to discontinuation announcement dated October 17, 2014*).

Tables

1. Cohere - Casters added to fixed height and pin height tables
2. Cohere Half-Round tables added
3. All Height-Adjustable tables are now included in this section
4. RGE Electric Height Adjustable table added
5. XR-Series – Added 4-column laminate dual surface rectangular and a 5-column laminate dual surface corner
6. Bistro and Event tables moved to this section along with Conference/Training Room Accessories
7. Discontinued: All Encounter Tables

Seating

1. New Gist™ Task, Task Plus+ and Multi-Purpose Chairs
2. New Escalate chair and stool now available in White (in addition to Black)
3. Four new Mercado wood guest chair designs in three finishes
4. New Santa Cruz and Prestige Lounge Options:
    a. Black legs standard with other finishes including Silver available in leg kits
5. Event Series Stacking and Folding Chairs moved to this section
6. Discontinued seating items:
    a. Blue and Burgundy fabric options for 6446 Big & Tall chair
    b. TC2250 and 4021 Task Chairs
    c. Executive Leather Chairs – models FLBLK and OPMBLK
    d. Multi-task Stools – models 2610 and 2660

High-Density Storage

1. New S/E Cabinet (Storage & Evidence)
2. New Lateral Files (4 colors only) along with Lateral Files on Kwik-Track

Mailroom Furniture

1. New Storage Tables and Consoles added to the MailFlow Systems section
2. Discontinued: M048C, M042C and M036C Organizing systems

Technology Furniture

1. New Height-Adjustable (Vertical and Tilt Design) Media Centers
2. A new "How-to-Specify" section was added to Maytrix for easier ordering
3. Eight Techworks Typicals are now available vs. only one previously
4. Eastwinds Computer Furniture now in this section
5. Discontinued: Net Start LAN product line

Drafting Furniture:

1. Moved Eastwinds Computer furniture and Machine Stands to Technology Furniture section
2. Discontinued: Drawing Table 7403APWH Stowaway 30x42 white base

Contact Mayline Customer Service if Questions:

Phone: (800) 822-8037
E-Mail: customerservice@mayline.com

Mayline Corporate Color Program (Effective January 1, 2015)

For many of Mayline's product lines, an extensive standard Corporate Color Program is available. Look for this symbol throughout the Price List for product lines offered with our Corporate Color Program. Select product lines have limited finish options and are noted individually within each product section. For examples of standard finishes, please refer to Mayline's Corporate Color Chart or visit www.mayline.com.

Paints

Our standard paint offering is available on most Mayline products. Refer to ordering guidelines as some exceptions may apply.

Black	Hunter	Desert Sage	Pebble Gray	Cranberry	Textured Graphite	Blue Medium
Medium Tone	Sand Beige	Warm White	Blue Medium	Navy	Textured Gray	
Mist	White	Sand	Tech Silver	Putty	Textured Black	

Note: Mailflow-to-Go is available in Pebble Gray. Cohere and e5 are available in e5 Tech Silver, e5 Black, and e5 Furniture White only. Lateral files are available in Black, Medium Tone, Desert Sage and Mist paint options only.

High Pressure Laminates (Edge Colors)

All HPLs are available on the following product lines: Height-Adjustable tables, TransAction, Cohere, TechWorks, Maytrix, CSII, Meeting Plus, Flip-N-Go, Sync, T-Mate, Bistro, Mailflow Systems, and ARC Rotary Tops. HPLs and edging combinations (shown in parenthesis below) are for the purpose of displaying our most popular combinations only.

- HPL and edging colors can be specified in any combination at time of order at no additional charge (refer to ordering guidelines by product as some exceptions may apply).
- Refer to Corporate Color Chart for other edge treatments available per product line.
- Upcharges, minimum order quantities and extended lead times may apply.

Designer White (Designer White)	Raven (Raven)	Fashion Gray (Ice Gray)	Classic Rock (Taupe)
Summer Suede (Light Brown)	Nebula Graphite (Black)	Windswept Pewter (Warm Gray)	Asian Sand (Taupe)
Cocoa (Medium Brown)	Pearwood (Black)	Maple (Black)	Crown Cherry (Black)
Biltmore Cherry (Black)	Mahogany (Black)	Nebula Gray (Ice Gray)	Witchcraft (Black)
Columbian Walnut (Dark Brown)	Storm Gray Matrix (Black)	Asian Night (Tech Silver)	*Gray ESD (Black)

Note: Gray ESD is only available on TechWorks and Maytrix product lines.

Thermally-Fused Laminates (Edge Colors)

All TFLs are available on the following product lines: Height-Adjustable tables, TechWorks, Maytrix, Meeting Plus, Flip-N-Go, Sync, T-Mate and Bistro. Four standard edge colors: Ice Gray, Taupe, Warm Gray or Black. TFLs and edging combinations shown below are for the purpose of displaying our most popular combinations only. TFL and edging colors can be specified in any combination at the time of order at no additional charge (refer to ordering guidelines by product as some exceptions may apply).

Speckled Gray Matrix (Ice Gray)	Fog Gray (Warm Gray)	Ice Gray (Ice Gray)
Birch (Taupe)	Cherry (Black)	Mocha (Black)

Note: Mailflow-to-Go is only available in Birch with Ice Gray edging. eLan is only available in Ice Gray. Eastwinds product line is available in Anthracite and Medium Cherry only.

e5 Workstations and Keep Modular Wall Thermally-Fused Laminates (TFLs)

Surfaces have PVC 2mm edge that matches the TFL color and is available in:

Cocoa	Summer Suede	Columbian Walnut
Biltmore Cherry	Raven	Designer White

Textile Programs

Privacy panels, fabric tack panels and decorative enhancements are offered in Guilford of Maine fabrics. Commute, Gist and Valore chair cushions, and e5 cushions are offered in Momentum fabrics. Refer to Corporate Color Chart for standard fabric options. Additional fabrics are available here:

- Guilford of Maine - www.guilfordofmaine.com
- Momentum - www.themomentumgroup.com

Contact Mayline Customer Service at 800-822-8037 or customerservice@mayline.com if questions.

TABLE OF CONTENTS

Page

WORKSPACES

e5™ Desking ..... GSA 8
- e5 Quick Ship ..... GSA 10
- e5 Idea Starters ..... GSA 14
- e5 Assemblies and Components ..... GSA ..... GIZA/CAP 21

Keep™ Modular Wall ..... GSA ..... GIZA/CAP 46
- Keep Series "Build-a-Wall" Components ..... GSA ..... GIZA/CAP 46
- Keep Series Idea Starters ..... GSA ..... GIZA/CAP 48

CSII™ Desking ..... GSA ..... GIZA/CAP 50
- Lateral Files & Bookcases ..... GIZA/CAP 61
- Communication Station® Freestanding Worktables ..... GSA ..... GIZA/CAP 70

TransAction™ Desking & Conference ..... GSA ..... GIZA/CAP 71

Ergonomic Accessories ..... GSA 89
- Monitor Arms ..... GSA ..... GIZA/CAP 89
- LED Lighting Options ..... GSA ..... GIZA/CAP 91

DESKS & STORAGE

Medina™ Laminate Series ..... GIZA/CAP 94

Aberdeen® Laminate Series ..... GIZA/CAP 105

Brighton Laminate Series ..... GIZA/CAP 118

Corsica® Veneer Series ..... GIZA/CAP 128

Napoli® Veneer Series ..... GIZA/CAP 139

Sorrento Veneer Series ..... GIZA/CAP 149

Luminary Veneer Series ..... GIZA/CAP 159

Mira Veneer Series ..... GIZA/CAP 168

Power and Data Options ..... GIZA/CAP 178

Lounge Furniture ..... GIZA/CAP 180
- Prestige Lounge ..... GIZA/CAP 180
- Santa Cruz Lounge ..... GIZA/CAP 180
- Mercado Guest Chairs ..... GIZA/CAP 181
- Occasional Tables ..... GIZA/CAP 182

TABLES

Cohere™ Tables ..... GSA ..... GIZA/CAP 186

Height-Adjustable Tables ..... GIZA/CAP 196
- LT Series ..... GIZA/CAP 196
- E-Series ..... GSA ..... GIZA/CAP 197
- XR Series ..... GSA ..... GIZA/CAP 198
- RGE Series ..... GSA ..... GIZA/CAP 200

Meeting Plus™ Conference & Training Tables ..... GSA ..... GIZA/CAP 201

TABLE OF CONTENTS *continued*

Page

TABLES (continued)

Sync™ Tables ..... GSA ..... GIZA/CAP 203
Flip-N-Go® Tables ..... GSA ..... GIZA/CAP 205
T-Mate™ Tables ..... GSA ..... GIZA/CAP 207
Training Table Power Options ..... GIZA/CAP 209
Transaction™ Conference & Media Tables ..... GSA ..... GIZA/CAP 210
Transaction™ Powere & Telecom Options ..... GSA 213
Ranger® Team Tables ..... GIZA/CAP 215
CSII™ Conference Tables ..... GSA ..... GIZA/CAP 216
Bistro Series Tables ..... GSA ..... GIZA/CAP 217
Event Folding/Stacking Tables ..... GIZA/CAP 219
Conference/Training Room Accessories 220

SEATING

Gist™ Series (Task, Desk) ..... GSA ..... GIZA/CAP 224
Valoré® Series ..... GSA ..... GIZA/CAP 226
Commute™ Series ..... GSA ..... GIZA/CAP 228
Ultimo™ Leather Series ..... GIZA/CAP 229
Mercado™ Leather Series ..... GIZA/CAP 231
Mercado™ Wood Guest Series ..... GIZA/CAP 233
Bistro Series™ Café Seating ..... GIZA/CAP 234
Valoré® Bistro Series ..... GIZA/CAP 234
Escalate Bistro Series ..... GIZA/CAP 234
Event Folding/Stacking ..... GIZA/CAP 235
Comfort Series ..... GIZA/CAP 236
Big & Tall Options ..... GIZA/CAP 238
Multi-Task Stools ..... GIZA/CAP 239
Lounge & Reception Furniture ..... GIZA/CAP 240
Prestige Lounge ..... GIZA/CAP 240
Santa Cruz Lounge ..... GIZA/CAP 240
Mobile Chair w/Tablet Arm ..... GIZA/CAP 240

HIGH DENSITY STORAGE

Mobile Aisle™ ..... GSA 242
Mobile Lite Typicals ..... GSA 245
4-Post Shelving ..... GSA 247
4-Post Shelving on Kwik-Track 261
The Security Shade ..... GSA 263
Heavy-Duty Shelving ..... GSA 263
File Harbor Cabinets ..... GSA ..... GIZA/CAP 266
File Harbor Cabinets on Kwik-Trip ..... GSA ..... GIZA/CAP 271

TABLE OF CONTENTS *continued*

Page

HIGH DENSITY STORAGE (continued)

Forms/Storage Cabinets ..... GSA ..... GIZA/CAP 272
ARC™ Rotary Files ..... GSA ..... GIZA/CAP 276
Flip-N-File™ Cabinets ..... GIZA/CAP 282
Decorative Enhancements 283
Insertables® ..... GSA 285
Storage/Transport Cart ..... GSA 286
Mobilizers™ 286
Lateral Files 287
Lateral Files om Kwik-Track 287

MAILROOM FURNITURE

Mailflow Systems® ..... GSA ..... GIZA/CAP 290
Mailflow-to-Go™ ..... GSA 308

TECHNOLOGY FURNITURE

Techworks® ..... GSA 312
Maytrix® LAN Racking System ..... GSA 320
e*Lan Computer Racking Stations ..... GSA 326
Eastwinds Computer Furniture 329
Machine Stands 331
S/E Cabinet ..... GSA ..... GIZA/CAP 328
Height Adjustable Media/Design Center ..... GIZA/CAP 327

DRAFTING FURNITURE

Ranger® Drawing Tables ..... GIZA/CAP 336
Ranger® Team Tables ..... GIZA/CAP 337
Futur-Matic® Drawing Tables ..... GIZA/CAP 339
ProKits 339
Straightedges 340
Vertical Hanging Files 343
Plan Files ..... GSA ..... GIZA/CAP 345

COM PAGES

COM 350

PRODUCT INDEX

Index 352

WORKSPACES

e5™ Desking Quick-Ship Program
e5™ Desking Idea Starters
e5™ Assemblies, Storage & Productivity Components
Keep™ Modular Wall
CSII™ Desking
Lateral Files & Bookcases
Small Office/Home Office
TRANSACTION™ Desking & Conference
Ergonomics

e5 ™ DESKING

e5's common-sense approach to building a workspace makes it easy to specify, easy to install, easy to power, easy to reconfigure and easy to afford. e5 can be used to furnish everything from private offices and open plan spaces to benching applications – all while promoting productivity and collaboration. The line is comprised of three basic elements: worksurfaces, storage, and power/data solutions.

Worksurfaces:

The e5 series offers three shapes of worksurfaces – rectangles, trapezoids, and hatchets. The thickness of surfaces is 1 1/8" pressed wood particle board with thermally fused laminate on both sides, then finished with a 2 mm thick, color-matched PVC edge.

For ease of specification and ordering, the e5 worksurfaces and supports have been set up as complete assemblies with one model number including modesty panel options.

Storage:

e5 offers many types of storage units including:

- Layered height storage
- Surface height cabinets
- Mobile and surface-supporting pedestals
- Freestanding wardrobes and bookcases
- Overhead storage units

All storage units are constructed using thermally-fused laminate and are supported by painted steel legs 1 7/8" high with adjustable levelers (except mobile pedestals). All storage units ship fully assembled except for the legs which are field installed. All storage units feature finished backs. Wood-grain pattern runs vertically on cabinet fronts, sides and backs, and runs side-to-side on horizontal surfaces. Optional seat cushions are offered for layered height storage units and mobile pedestals.

Power and Data:

e5 delivers convenient power and data connections via its patent-pending Technology Beltway and Technology Wall. All connection points are within arm's reach from a seated position. e5 offers preconfigured power kits that make it extremely easy to specify and install.

Finish Options:

e5 elements are made from Thermally Fused Laminate in six colors with matching edgebanding. The TFL colors available are Summer Suede, Biltmore Cherry, Cocoa, Designer White, Columbian Walnut and Raven.

Steel parts such as legs and beltways are available in 3 powder coat paint colors: White, Black and Silver.

Door and drawer pulls are standard in silver color and design shown only.

Fabrics for mobile pedestal and cabinet cushions as well as tackboards are part of the Mayline/Momentum textile program. For COM fabrics see order form at the back or the price list for guidelines.

Safety and Sustainability:

e5 casegoods and worksurfaces have passed safety performance requirements as outlined in BIFMA X5.9-2004 Storage Units and BIFMA X5.5-2008 Desk/Table Products criteria.

Mayline continues to develop products with the environment in mind. e5 has met Intertek Greenleaf VOC+ indoor air quality criteria which conform to the ANSI/BIFMA Furniture Emissions Standards (M7.1 X7.1.2011) for Office Furniture Systems and Components emission criteria and ANSI/BIFMA e3-2011e (Credits 7.6.1 and 7.6.2) for Office Furniture Systems and Components.

All wood core used in the manufacture of e5 is CARB Phase II compliant as required.

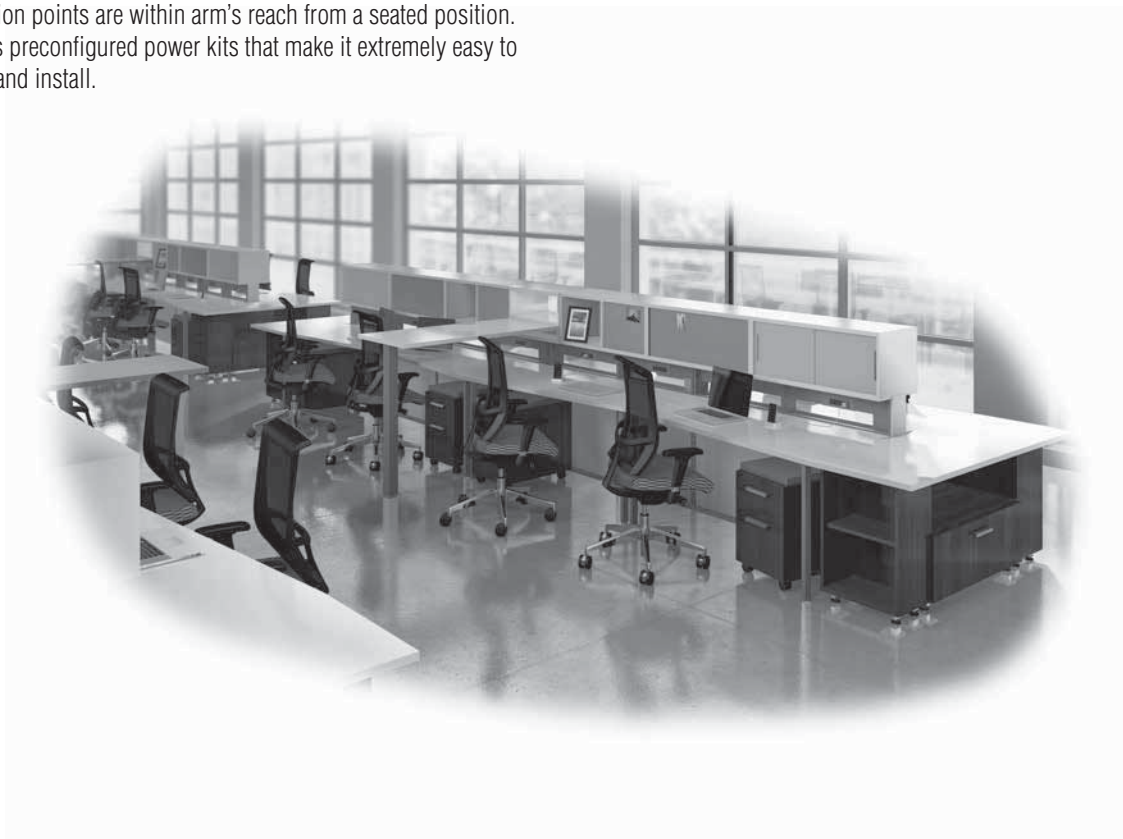

HELPFUL HINTS WHEN SPECIFYING e5

Mayline's e5 desking line was designed to be easy to specify. The following diagrams will assist you in the steps in designing spaces for private offices to open plan desking areas. Components, when rearranged, work in a variety of office settings offering a uniform and coordinated look throughout the entire office.

PLAN YOUR SPACE – With the assistance of the Mayline Spaceplanning Department and the e5 on-line planning survey or self-specifying tools such as GIZA and CAP design libraries, it's easy to plan your space based on room dimensions and end-user requirements. Complete assemblies have been configured so only one model number has to be ordered comprised of (1) worksurface, surface supports, and undersurface surface channel for maximum unit stability.

CHOOSE FROM THE FOLLOWING TWO OPTIONS:

1 PRIVATE OFFICE ENVIRONMENT

ABOVE SURFACE STORAGE – Mayline e5 has a number of overhead storage options for private office and open plan. Traditional overhead cabinets with a choice of open fronts, sliding acrylic marker board, or frosted glass or laminate hinged doors can be wall mounted or surface supported. Overhead units can also be mounted on the technology beltway or wall for additional storage or privacy with tackboard or dry erase board options on the rear of the units.

ACCESSORIES – e5 optional elements are available to personalize each workstation. From fabric cushions and tackboards to support modules, LED task and desk lighting and monitor arms, there is a variety of options for meeting most needs.

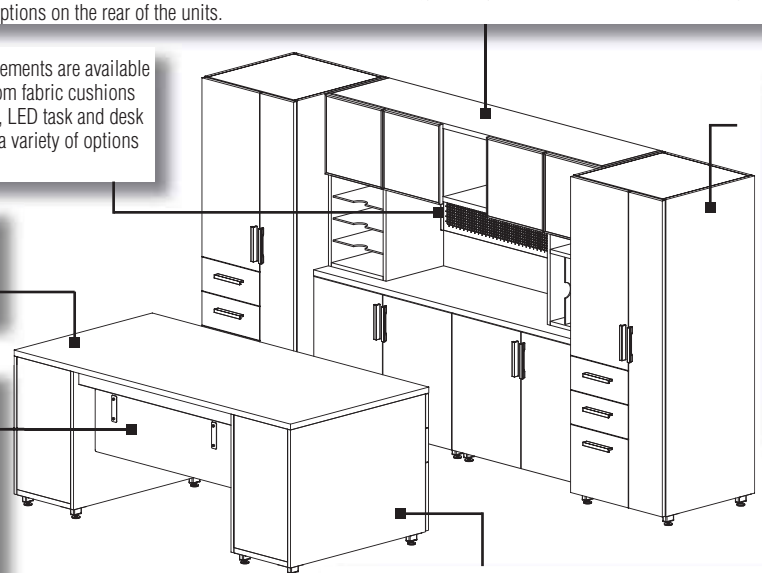

BELOW WORKSURFACE, SURFACE HEIGHT STORAGE & FREESTANDING STORAGE – A wide selection of conventional storage options are available with a variety of opening combinations. Below worksurface cabinets can double as a support mechanism creating a layered look and saving space in smaller footprint situations. Mobile pedestals, lateral files, bookcases, wardrobes and sliding and hinged door cabinets are available to fill all storage.

WORKSURFACE – Choose from three shapes (rectangular, hatchet or tapered) in a variety of sizes.

PRIVACY SCREENS & MODESTY PANELS – 12.5" modesty panels are available in matching TFL or frosted acrylic. When ordering a complete assembly of worksurface and supports, a modesty panel can be chosen by adding ML or MA to the assembly as a suffix.

Frosted acrylic privacy panels provide above surface face-to-face space division. They provide limited privacy and are not designed for sound masking.

SUPPORT – A variety of support elements or combination of these options are available to give your environment the look and structure you require. Choose from standard height legs, full end panels or support pedestals for traditional worksurface support. Short legs and combinations of short and standard legs offer a unique layered look when combined with storage elements.

2 OPEN PLAN ENVIRONMENT

ABOVE SURFACE STORAGE – Mayline e5 has a number of overhead storage options for private office and open plan. Traditional overhead cabinets with a choice of open fronts, sliding acrylic marker board, or frosted glass or laminate hinged doors can be wall mounted or surface supported. Overhead units can also be mounted on the technology beltway or wall for additional storage or privacy with tackboard or dry erase board options on the rear of the units.

ACCESSORIES – e5 optional elements are available to personalize each workstation. From fabric cushions and tackboards to support modules, LED task and desk lighting and monitor arms, there is a variety of options for meeting most needs.

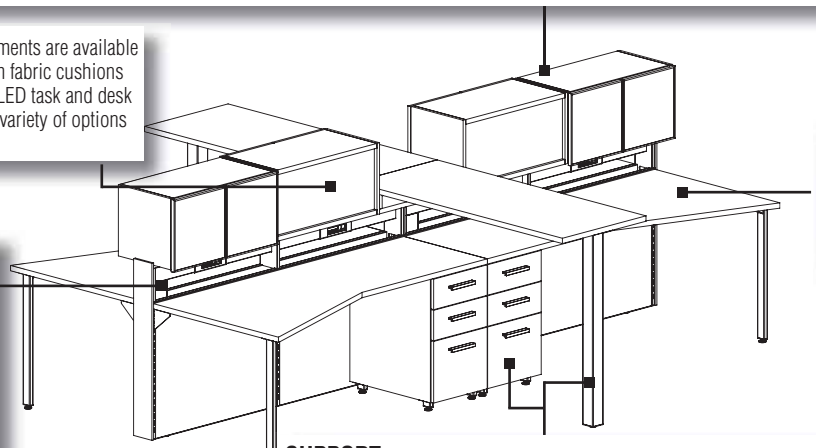

WORKSURFACE – Choose from three shapes (rectangular, hatchet or tapered) in a variety of sizes.

POWER & DATA – Via e5's patent pending technology beltway or technology wall, power and data can be carried to the user at seated height. These units are easy to specify using preconfigured power kits and easy to install by simply dropping into the proper space in the beltway or wall. 4-circuit hardwire or single circuit plug-in systems are available.

SUPPORT – A variety of support elements or combination of these options are available to give your environment the look and structure you require. Choose from standard height legs, full end panels or support pedestals for traditional worksurface support. Short legs and combinations of short and standard legs offer a unique layered look when combined with storage elements.

e5 QUICK-SHIP PROGRAM TYPICALS

GSA Intertek QUICK-SHIP

Select e5 Typicals are now in stock and ready to ship within 3 business days. Choose from the following 16 Typicals.

PROGRAM GUIDELINES

- Designer White surfaces.
- Choice of White or Raven storage elements.
- Up to 3 Typicals maximum per order, per day.
- No additional color selections available. Product substitutions not allowed.

E5K1 *configuration using long leg kit provided.*

e5K1 Furniture Components

Consists of:

QTY.	DESCRIPTION	DIMENSIONS
1	Desk	60"W x 24"D x 29 1/2"H
1	Wall Mount Hutch	30"W x 15"D x 15"H
1	Mobile Pedestal	15 1/2"W x 24"D x 23"H

E5K1 **LIST PRICE: $1717**

E5K1 *configuration using long leg kit provided.*

E5K2 *configuration using long leg kit provided.*

e5K2 Furniture Components

Consists of:

QTY.	DESCRIPTION	DIMENSIONS
1	Desk*	60"W x 24"D x 29 1/2"H
1	Wall Mount Hutch	30"W x 15"D x 15"H
1	Open Storage Cabinet	30"W x 18"D x 21 3/4"H

E5K2 **LIST PRICE: $1842**

E5K2 *configuration using long and short leg kit provided.*

E5K3 *configuration using long and short leg kit provided.*

e5K3 Furniture Components

Consists of:

QTY.	DESCRIPTION	DIMENSIONS
1	Desk*	60"W x 24"D x 29 1/2"H
1	Open Storage Cabinet	30"W x 18"D x 21 3/4"H
1	Mobile Pedestal	15 1/2"W x 24"D x 23"H

E5K3 **LIST PRICE: $2036**

E5K3 *configuration using long leg kit provided.*

E5K4 *configuration using long leg kit provided.*

e5K4 Furniture Components

Consists of:

QTY.	DESCRIPTION	DIMENSIONS
1	Desk*	60"W x 24"D x 29 1/2"H
1	Wall Mount Hutch	30"W x 15"D x 15"H
1	Lateral File	30"W x 18"D x 21 3/4"H

E5K4 **LIST PRICE: $2153**

E5K4 *configuration using long and short leg kit provided.*

*** NOTE:** Desk has 4 Standard and 2 Short Legs.

e5 QUICK-SHIP PROGRAM TYPICALS

E5K5 *configuration using long and short leg kit provided.*

e5K5 Furniture Components

Consists of:

QTY.	DESCRIPTION	DIMENSIONS
1	Desk*	60"W x 24"D x 29 1/2"H
1	Lateral File	30"W x 18"D x 21 3/4"H
1	Mobile Pedestal	15 1/2"W x 24"D x 23"H

E5K5 **LIST PRICE: $2346**

E5K5 *configuration using long leg kit provided.*

E5K6 *configuration using long and short leg kit provided.*

e5K6 Furniture Components

Consists of:

QTY.	DESCRIPTION	DIMENSIONS
1	Desk*	60"W x 24"D x 29 1/2"H
2	Wall Mount Hutches	30"W x 15"D x 15"H
1	Open Storage Cabinet	30"W x 18"D x 21 3/4"H

E5K6 **LIST PRICE: $2269**

E5K6 *configuration using long leg kit provided.*

E5K7 *configuration using long and short leg kit provided.*

e5K7 Furniture Components

Consists of:

QTY.	DESCRIPTION	DIMENSIONS
1	Desk*	60"W x 24"D x 29 1/2"H
1	Open Storage Cabinet	30"W x 18"D x 21 3/4"H
1	Lateral File	30"W x 18"D x 21 3/4"H

E5K7 **LIST PRICE: $2412**

E5K7 *configuration using long leg kit provided.*

E5K8 *configuration using long and short leg kit provided.*

e5K8 Furniture Components

Consists of:

QTY.	DESCRIPTION	DIMENSIONS
1	Desk*	60"W x 24"D x 29 1/2"H
1	Wall Mount Hutch	30"W x 15"D x 15"H
1	Open Storage Cabinet	30"W x 18"D x 21 3/4"H
1	Mobile Pedestal	15 1/2"W x 24"D x 23"H

E5K8 **LIST PRICE: $2462**

E5K8 *configuration using long leg kit provided.*

E5K9 *configuration using long and short leg kit provided.*

e5K9 Furniture Components

Consists of:

QTY.	DESCRIPTION	DIMENSIONS
1	Desk*	60"W x 24"D x 29 1/2"H
2	Wall Mount Hutch	30"W x 15"D x 15"H
1	Lateral File	30"W x 18"D x 21 3/4"H

E5K9 **LIST PRICE: $2579**

E5K9 *configuration using long leg kit provided.*

E5K10 *configuration using long leg kit provided.*

e5K10 Furniture Components

Consists of:

QTY.	DESCRIPTION	DIMENSIONS
1	Desk*	60"W x 24"D x 29 1/2"H
1	Wall Mount Hutch	30"W x 15"D x 15"H
1	Lateral File	30"W x 18"D x 21 3/4"H
1	Mobile Pedestal	15 1/2"W x 24"D x 23"H

E5K10 **LIST PRICE: $2772**

E5K10 *configuration using long and short leg kit provided.*

*** NOTE:** Desk has 4 Standard and 2 Short Legs.

e5 QUICK-SHIP PROGRAM TYPICALS

E5K11 *configuration using long and short leg kit provided.*

e5K11 Furniture Components

Consists of:

QTY.	DESCRIPTION	DIMENSIONS
1	Desk*	60"W x 24"D x 29 1/2"H
1	Wall Mount Hutch	30"W x 15"D x 15"H
1	Open Storage Cabinet	30"W x 18"D x 21 3/4"H
1	Lateral File	30"W x 18"D x 21 3/4"H

E5K11 **LIST PRICE: $2838**

E5K11 *configuration using long and short leg kit provided.*

E5K12 *configuration using long and short leg kit provided.*

e5K12 Furniture Components

Consists of:

QTY.	DESCRIPTION	DIMENSIONS
1	Desk*	60"W x 24"D x 29 1/2"H
2	Wall Mount Hutch	30"W x 15"D x 15"H
1	Open Storage Cabinet	30"W x 18"D x 21 3/4"H
1	Mobile Pedestal	15 1/2"W x 24"D x 23"H

E5K12 **LIST PRICE: $2888**

E5K12 *configuration using long leg kit provided.*

E5K13 *configuration using long and short leg kit provided.*

e5K13 Furniture Components

Consists of:

QTY.	DESCRIPTION	DIMENSIONS
1	Desk*	60"W x 24"D x 29 1/2"H
1	Open Storage Cabinet	30"W x 18"D x 21 3/4"H
1	Lateral File	30"W x 18"D x 21 3/4"H
1	Mobile Pedestal	15 1/2"W x 24"D x 23"H

E5K13 **LIST PRICE: $3032**

E5K13 *configuration using long leg kit provided.*

E5K14 *configuration using long leg kit provided.*

e5K14 Furniture Components

Consists of:

QTY.	DESCRIPTION	DIMENSIONS
1	Desk*	60"W x 24"D x 29 1/2"H
2	Wall Mount Hutch	30"W x 15"D x 15"H
1	Lateral File	30"W x 18"D x 21 3/4"H
1	Mobile Pedestal	15 1/2"W x 24"D x 23"H

E5K14 **LIST PRICE: $3198**

E5K14 *configuration using long and short leg kit provided.*

E5K15 *configuration using long leg kit provided.*

e5K15 Furniture Components

Consists of:

QTY.	DESCRIPTION	DIMENSIONS
1	Desk*	60"W x 24"D x 29 1/2"H
2	Wall Mount Hutch	30"W x 15"D x 15"H
1	Open Storage Cabinet	30"W x 18"D x 21 3/4"H
1	Lateral File	30"W x 18"D x 21 3/4"H

E5K15 **LIST PRICE: $3264**

E5K15 *configuration using long and short leg kit provided.*

E5K16 *configuration using long leg kit provided.*

e5K16 Furniture Components

Consists of:

QTY.	DESCRIPTION	DIMENSIONS
1	Desk*	60"W x 24"D x 29 1/2"H
2	Wall Mount Hutch	30"W x 15"D x 15"H
1	Open Storage Cabinet	30"W x 18"D x 21 3/4"H
1	Lateral File	30"W x 18"D x 21 3/4"H
1	Mobile Pedestal	15 1/2"W x 24"D x 23"H

E5K16 **LIST PRICE: $3884**

E5K16 *configuration using long and short leg kit provided.*

*** NOTE:** Desk has 4 Standard and 2 Short Legs.

e5 QUICK-SHIP PROGRAM – PICK 3 OR MORE COMPONENTS

GSA Intertek QUICK-SHIP

Select 3 or more e5 components from the list below and they will ship within 3 business days.
An ideal way to create an endless number of unique workstation configurations.

PROGRAM GUIDELINES

- Designer White (5AGZ) and Raven (5AHB) Laminates – mix and match your surface and storage components in these 2 finishes.
- Up to 12 pieces maximum per order, per day.
- Each order must contain a minimum of 3 Furniture Components.

FURNITURE COMPONENTS

E5TOP

Model No.	Description	Dimensions	Wt.	List Price
E5TOP	Desk with 4 Standard & 2 Short Legs	60"W x 24"D x 29 1/2"H	99#	$730
E5OH	Wall Mount Hutch	30"W x 15"D x 15"H	47#	$426
E5PED	Mobile Pedestal	15 1/2"W x 24"D x 23"H	82#	$620
E5OPEN	Open Storage Cabinet	30"W x 18"D x 21 3/4"H	53#	$686
E5LAT	Lateral File	30"W x 18"D x 21 3/4"H	124#	$996

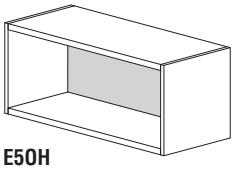
E5OH

E5PED

E5OPEN

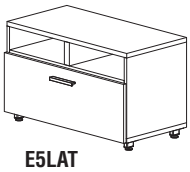
E5LAT

e5 QUICK-SHIP PROGRAM OPTIONAL ACCESSORIES

Commute Chair and Seat Cushions for Mobile Pedestals available in Expo Sprout (EST) or Fuse Pepper (FPP) upholstery.

OPTIONAL ACCESSORIES

C1BB2

Model No.	Description	Dimensions	Wt.	List Price
EZSC30	Seat Cushion for Open Storage/Lateral	29"W x 17"D x 2"H	3.5#	$297
EZSC15	Seat Cushion for Mobile Pedestal	15 1/2"W x 23"D x 2"H	3#	$277
C1BB2	Commute Task Seating	25"W x 23 to 25"D x 41 to 45"H	46#	$718

e5 IDEA STARTERS – NOT AVAILABLE ON QUICK-SHIP PROGRAM

• Must order by component level.

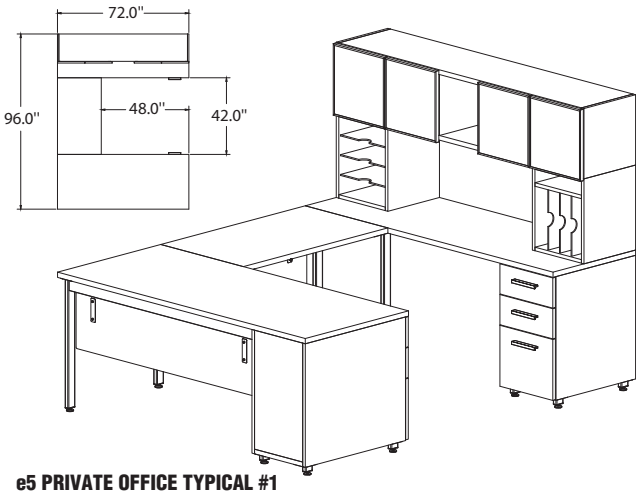

e5 PRIVATE OFFICE TYPICAL #1

Consists of:

QTY.	MODEL NO.	DESCRIPTION	LIST PRICE EACH
1	**EZ7230LBMA**	72" x 30" Top with BBF Pedestal (Left) with Acrylic Modesty Panel	$2057
1	**EZ4224RRMA**	42" Bridge with Acrylic Modesty Panel	$809
1	**EZ7224LB**	72" x 24" Top with BBF Pedestal (Left)	$1420
1	**EZSM18H**	Support Modules/Horizontal	$437
1	**EZSM18V**	Support Modules/Vertical	$437
1	**EZH72F**	72" Overhead Cabinet with Frosted Glass Doors	$1392

TOTAL: $6552

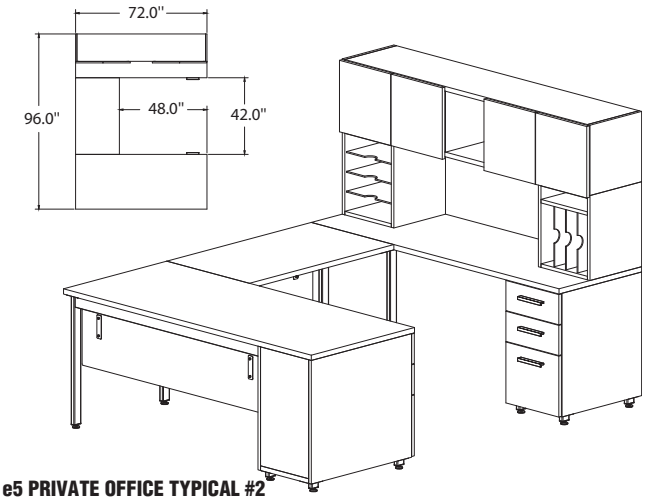

e5 PRIVATE OFFICE TYPICAL #2

Consists of:

QTY.	MODEL NO.	DESCRIPTION	LIST PRICE EACH
1	**EZ7230LBMA**	72" x 30" Top with BBF Pedestal (Left) with Acrylic Modesty Panel	$2057
1	**EZ4224RRMA**	42" Bridge with Acrylic Modesty Panel	$809
1	**EZ7224LB**	72" x 24" Top with BBF Pedestal (Left)	$1420
1	**EZSM18H**	Support Modules/Horizontal	$437
1	**EZSM18V**	Support Modules/Vertical	$437
1	**EZH72L**	72" Overhead Cabinet with Laminate Doors	$1045

TOTAL: $6205

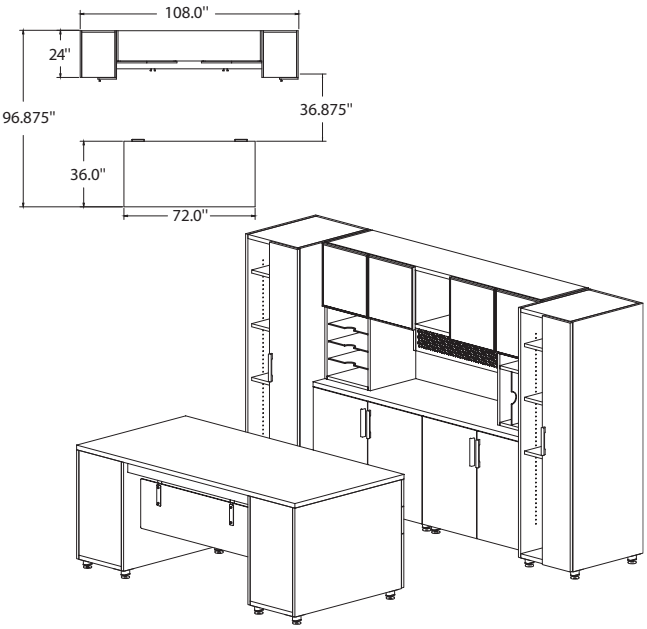

e5 PRIVATE OFFICE TYPICAL #3

Consists of:

QTY.	MODEL NO.	DESCRIPTION	LIST PRICE EACH
1	**EZ7236BBMA**	72" x 36" Double Pedestal BBF Desk with Acrylic Modesty Panel	$2667
1	**EZH72F**	72" Overhead Cabinet with Frosted Glass Doors	$1392
1	**EZSM18H**	Support Modules/Horizontal	$437
1	**EZSM18V**	Support Modules/Vertical	$437
1	**EZTM42**	TAK/MAG Tackboard	$585
1	**EZ7228L**	72" Laminate Hinged Door Cabinet	$2300
2	**EZWTC62**	62" Compact Wardrobe	$1543

TOTAL: $10904

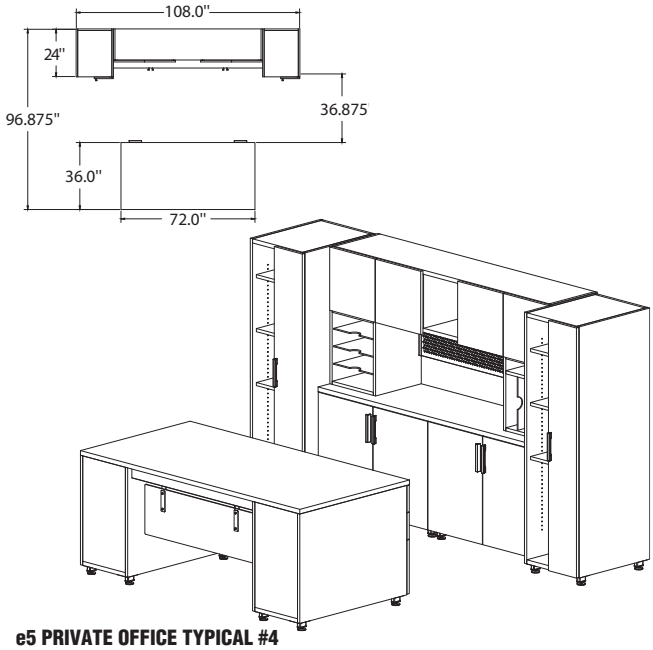

e5 PRIVATE OFFICE TYPICAL #4

Consists of:

QTY.	MODEL NO.	DESCRIPTION	LIST PRICE EACH
1	**EZ7236BBMA**	72" x 36" Double Pedestal BBF Desk with Acrylic Modesty Panel	$2667
1	**EZH72L**	72" Overhead Cabinet with Laminate Doors	$1045
1	**EZSM18H**	Support Modules/Horizontal	$437
1	**EZSM18V**	Support Modules/Vertical	$437
1	**EZTM42**	TAK/MAG Tackboard	$585
1	**EZ7228L**	72" Laminate Hinged Door Cabinet	$2300
2	**EZWTC62**	62" Compact Wardrobe	$1543

TOTAL: $10557

e5 IDEA STARTERS – NOT AVAILABLE ON QUICK-SHIP PROGRAM

- Must order by component level.

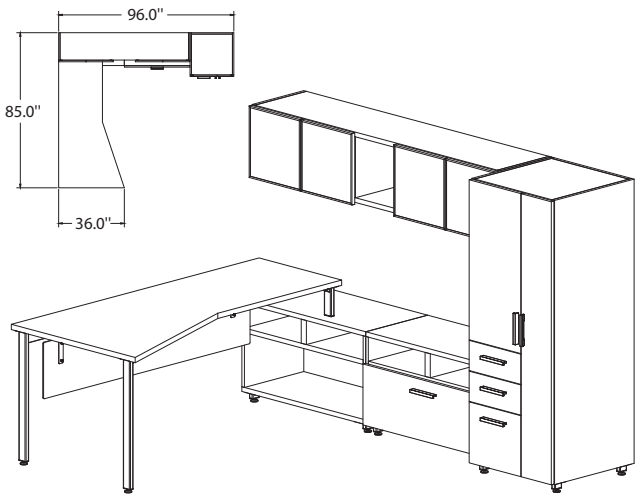

e5 PRIVATE OFFICE TYPICAL #5

Consists of:

QTY.	MODEL NO.	DESCRIPTION	LIST PRICE EACH
1	**EZHL7224LSMA**	72" Left-Handed Hatchet with Acrylic Modesty Panel	$1459
1	**EZH72F**	72" Overhead Cabinet with Frosted Glass Doors	$1392
1	**EZWT62**	62" Wardrobe	$2159
1	**EZ3623**	36" x 23" Open Top/Open Bottom Cabinet	$763
1	**EZ3623F**	36" x 23" Open Top/Lateral Drawer Cabinet	$1081

TOTAL: $6854

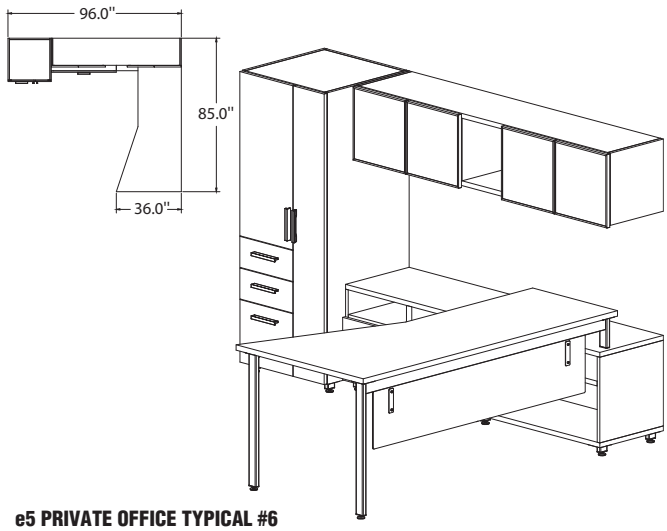

e5 PRIVATE OFFICE TYPICAL #6

Consists of:

QTY.	MODEL NO.	DESCRIPTION	LIST PRICE EACH
1	**EZHR7224LSMA**	72" Right-Handed Hatchet with Acrylic Modesty Panel	$1459
1	**EZH72F**	72" Overhead Cabinet with Frosted Glass Doors	$1392
1	**EZWT62**	62" Wardrobe	$2159
1	**EZ3623**	36" x 23" Open Top/Open Bottom Cabinet	$763
1	**EZ3623F**	36" x 23" Open Top/Lateral Drawer Cabinet	$1081

TOTAL: $6854

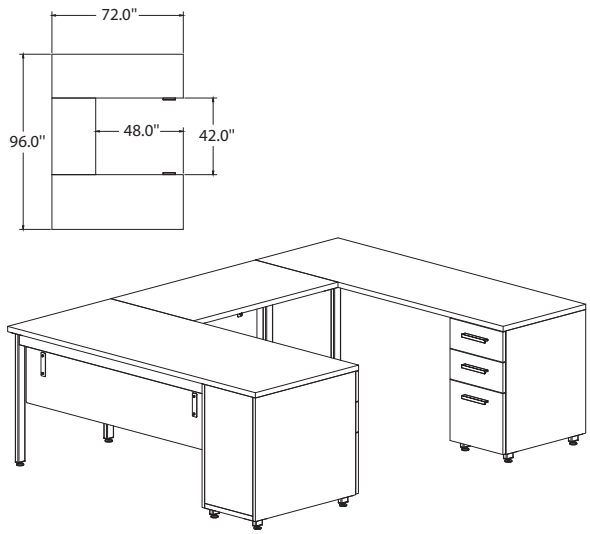

e5 PRIVATE OFFICE TYPICAL #7

Consists of:

QTY.	MODEL NO.	DESCRIPTION	LIST PRICE EACH
1	**EZ7230LBMA**	72" x 30" Top with BBF Pedestal (Left) with Acrylic Modesty Panel	$2057
1	**EZ4224RRMA**	42" Bridge with Acrylic Modesty Panel	$809
1	**EZ7224LB**	72" x 24" Top with BBF Pedestal (Left)	$1420

TOTAL: $4286

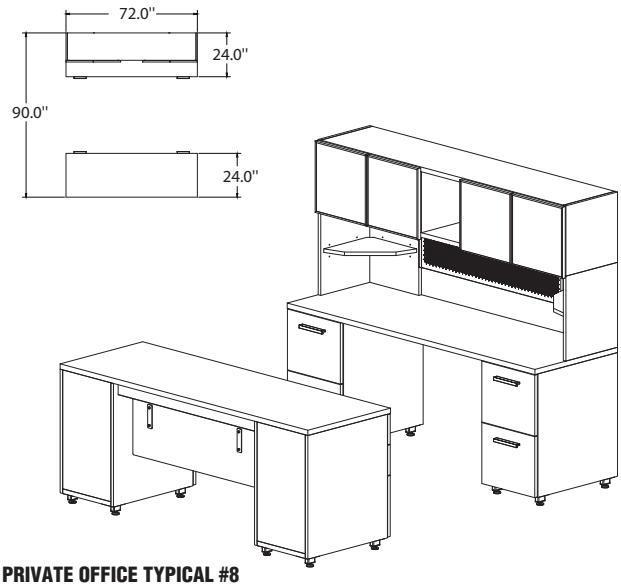

e5 PRIVATE OFFICE TYPICAL #8

Consists of:

QTY.	MODEL NO.	DESCRIPTION	LIST PRICE EACH
1	**EZ7230BBMA**	72" x 30" Desk with 2 BBF Pedestals with Acrylic Modesty Panel	$2587
1	**EZ7224FF**	72" x 24" Credenza Top with 2 FF Pedestals	$2040
1	**EZTM42**	TAK/MAG Tackboard	$585
1	**EZH72F**	72" Overhead Cabinet with Frosted Glass Doors	$1392
2	**EZCS**	Corner Support for Overhead Cabinet	$314

TOTAL: $7232

e5 IDEA STARTERS – NOT AVAILABLE ON QUICK-SHIP PROGRAM

• Must order by component level.

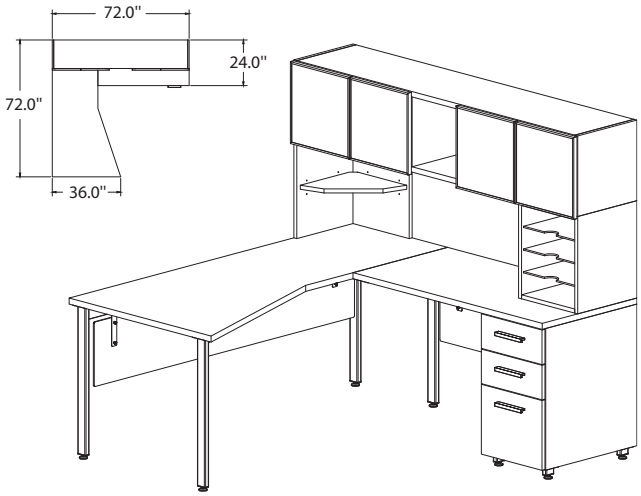

e5 PRIVATE OFFICE TYPICAL #9

Consists of:

QTY.	MODEL NO.	DESCRIPTION	LIST PRICE EACH
1	**EZHL7224LLMA**	72" x 24" Left-Handed Hatchet Desk with Acrylic Modesty Panel	$1489
1	**EZ4824RBMA**	48" x 24" Return with BBF Pedestal	$1578
1	**EZH72F**	72" Overhead Cabinet with Frosted Glass Doors	$1392
1	**EZCS**	Corner Support for Overhead Cabinet	$314
1	**EZSM18H**	Support Modules/Horizontal	$437

TOTAL: $5210

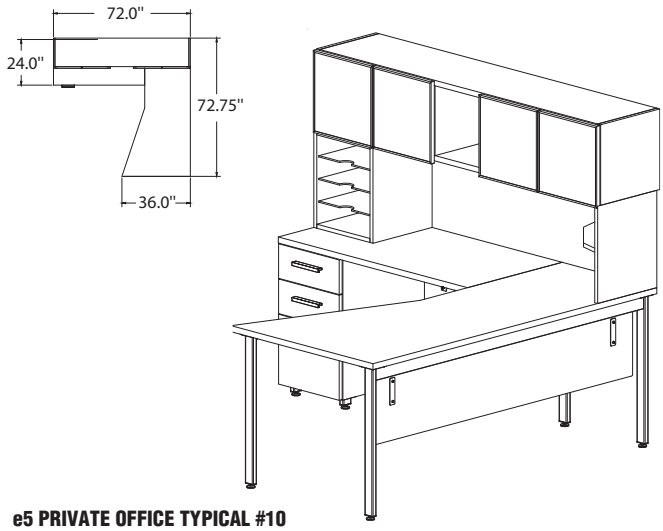

e5 PRIVATE OFFICE TYPICAL #10

Consists of:

QTY.	MODEL NO.	DESCRIPTION	LIST PRICE EACH
1	**EZHR7224LLMA**	72" x 24" Right-Handed Hatchet Desk with Acrylic Modesty Panel	$1489
1	**EZ4824RBMA**	48" x 24" Return with BBF Pedestal	$1578
1	**EZH72F**	72" Overhead Cabinet with Frosted Glass Doors	$1392
1	**EZCS**	Corner Support for Overhead Cabinet	$314
1	**EZSM18H**	Support Modules/Horizontal	$437

TOTAL: $5210

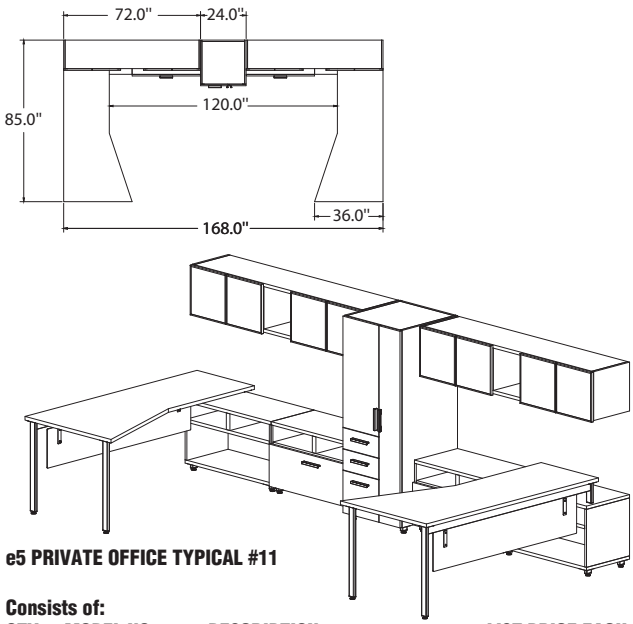

e5 PRIVATE OFFICE TYPICAL #11

Consists of:

QTY.	MODEL NO.	DESCRIPTION	LIST PRICE EACH
1	**EZHL7224LSMA**	72" x 24" Left-Handed Hatchet Desk with Acrylic Modesty Panel	$1459
1	**EZHR7224LSMA**	72" x 24" Right-Handed Hatchet Desk with Acrylic Modesty Panel	$1459
2	**EZ3623**	36" x 23" Open Top/Open Bottom Cabinet	$763
2	**EZ3623F**	36" x 23" Open Top/Lateral Drawer Cabinet	$1081
2	**EZH72F**	72" Overhead Cabinet with Frosted Glass Doors/Wall Mount	$1392
1	**EZWT62**	62" Wardrobe	$2159

TOTAL: $11549

NOTE: Single-Circuit Power provided.

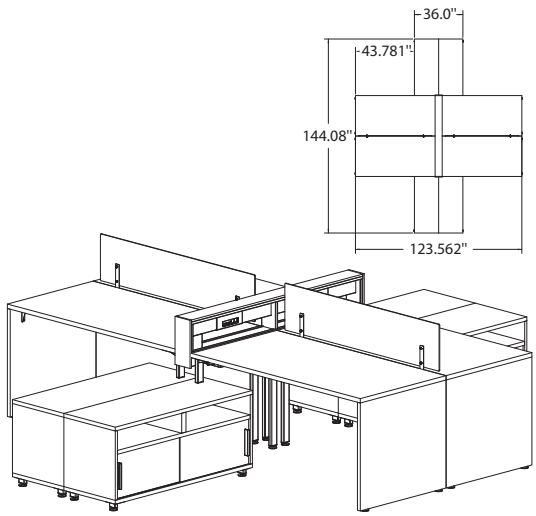

e5 PERSONAL WORKSTATION TYPICAL #12

Consists of:

QTY.	MODEL NO.	DESCRIPTION	LIST PRICE EACH
4	**EZEP6030C**	60" x 30" with End Panel	$727
2	**EZAPP54**	54" Acrylic Privacy Panels	$396
4	**EZ4823S**	48" x 23" Open Top/Sliding Door Bottom Cabinet	$971
1	**EZTB60PS**	60" Technology Beltway, Single-Circuit System	$1698

TOTAL: $9282

e5 IDEA STARTERS – NOT AVAILABLE ON QUICK-SHIP PROGRAM

- Must order by component level.

NOTE: Single-Circuit Power provided.

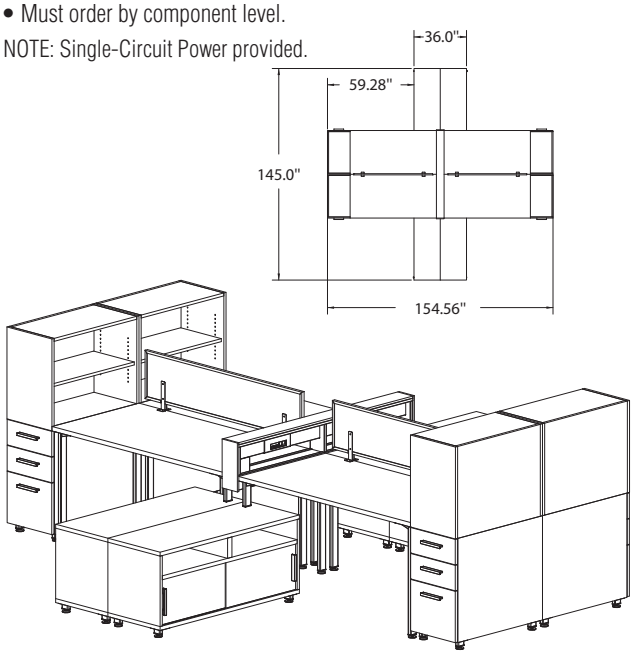

e5 PERSONAL WORKSTATION TYPICAL #14A

Consists of:

QTY.	MODEL NO.	DESCRIPTION	LIST PRICE EACH
4	**EZ6030LC**	60" x 30" with Legs	$665
2	**EZAPP54**	54" Acrylic Privacy Panels	$396
4	**EZ4823S**	48" x 23" Open Top/Sliding Door Bottom Cabinet	$971
1	**EZTB60PS**	60" Technology Beltway, Single-Circuit Starter	$1698
4	**EZP30BBF**	30"D BBF Pedestal	$931
4	**EZBC3023**	30"W Bookcase Adder	$542

TOTAL: $14926

NOTE: 4-Circuit Power provided.

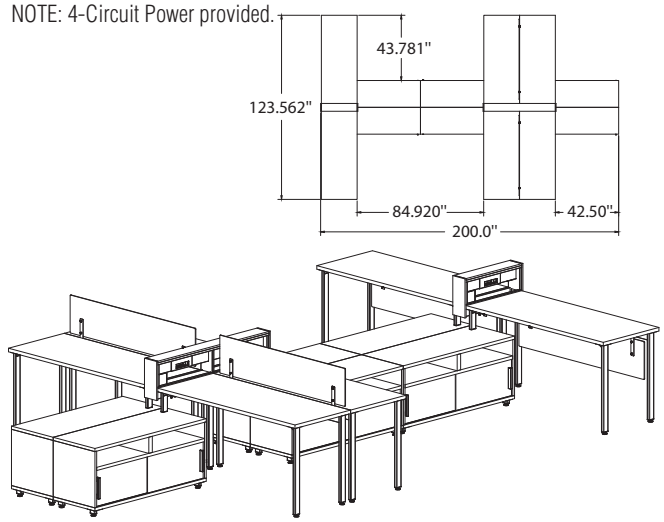

e5 PERSONAL WORKSTATION TYPICAL #15

Consists of:

QTY.	MODEL NO.	DESCRIPTION	LIST PRICE EACH
4	**EZ6024LC**	60" x 24" with Long/Short Legs	$658
2	**EZ6024LCMA**	60" x 24" with Long/Short Legs	$1272
2	**EZAPP54**	54" Acrylic Privacy Panels	$396
6	**EZ4823S**	48" x 23" Open Top/Sliding Door Bottom Cabinet	$971
1	**EZTB48HS**	48" Technology Beltway, 4-Circuit Starter	$1636
1	**EZTB24HA**	24" Technology Beltway, 4-Circuit Adder	$1118
1	**EZEC206**	206"L Interconnecting Cable	$398

TOTAL: $14946

NOTE: 4-Circuit Power provided.

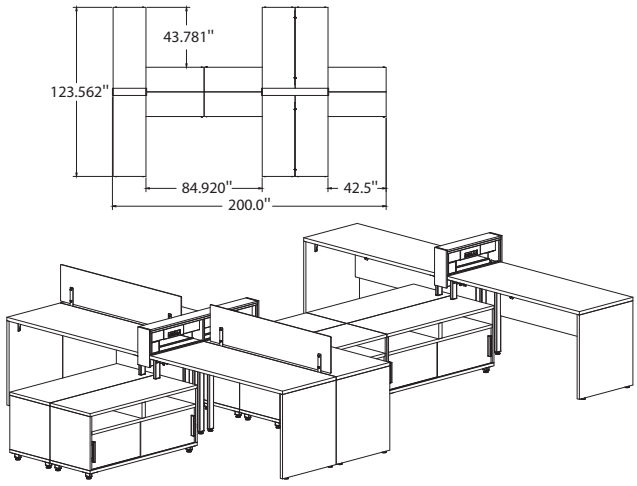

e5 PERSONAL WORKSTATION TYPICAL #16

Consists of:

QTY.	MODEL NO.	DESCRIPTION	LIST PRICE EACH
4	**EZEP6024C**	60" x 24" with End Panels	$674
2	**EZEP6024CMA**	60" x 24" with End Panels	$1286
2	**EZAPP54**	54" Acrylic Privacy Panels	$396
6	**EZ4823S**	48" x 23" Open Top/Sliding Door Bottom Cabinet	$971
1	**EZTB48HS**	48" Technology Beltway (4-Circuit Starter)	$1636
1	**EZTB24HA**	24" Technology Beltway (4-Circuit Adder)	$1118
1	**EZEC206**	206"L Interconnecting Cable	$398

TOTAL: $15038

NOTE: Single-Circuit Power provided.

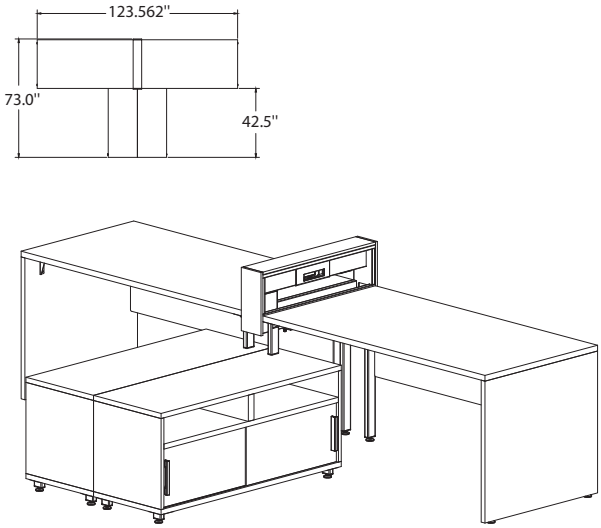

e5 PERSONAL WORKSTATION TYPICAL #17

Consists of:

QTY.	MODEL NO.	DESCRIPTION	LIST PRICE EACH
2	**EZEP6030CMA**	60" x 30" with Legs	$1338
2	**EZ4823S**	48" x 23" Open Top/Sliding Door Bottom Cabinet	$971
1	**EZTB30PS**	30" Technology Beltway, Single-Circuit Starter	$1315

TOTAL: $5933

e5 IDEA STARTERS – NOT AVAILABLE ON QUICK-SHIP PROGRAM

- Must order by component level.

NOTE: 4-Circuit Power provided.

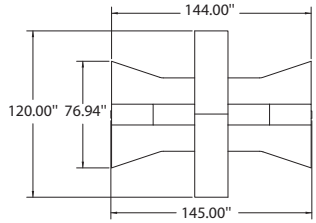

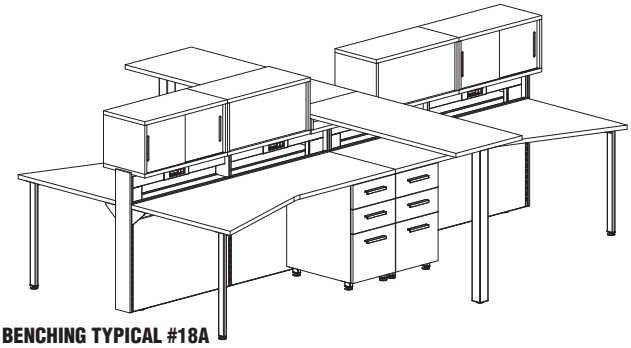

e5 BENCHING TYPICAL #18A

Consists of:

QTY.	MODEL NO.	DESCRIPTION	LIST PRICE EACH
2	**EZHL7224KB**	72" x 24" Left-Hand Hatchets with BBF Pedestal Support/Cantilevered Bracket/1 Long Leg	$1467
2	**EZHR7224KB**	72" x 24" Right-Hand Hatchets with BBF Pedestal Support/Cantilevered Bracket/1 Long Leg	$1467
1	**EZP6024D**	Double-sided Standing Height Peninsula Table	$1251
4	**EZH30S**	30" Overhead Cabinets with Sliding Doors	$626
1	**EZTW72HS**	Technology Wall, 4-Circuit Starter	$2849
1	**EZTW72HA**	Technology Wall, 4-Circuit Adder	$2692

TOTAL: $15164

NOTE: 4-Circuit Power provided.

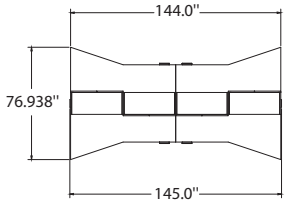

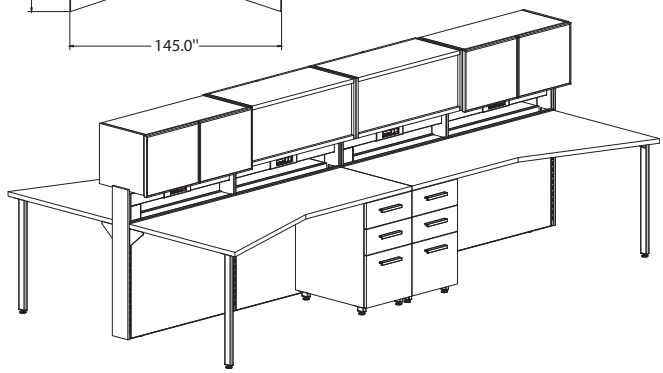

e5 BENCHING TYPICAL #19

Consists of:

QTY.	MODEL NO.	DESCRIPTION	LIST PRICE EACH
2	**EZHL7224KB**	72" x 24" Left-Hand Hatchets with BBF Pedestal Support/Cantilevered Bracket/1 Long Leg	$1467
2	**EZHR7224KB**	72" x 24" Right-Hand Hatchets with BBF Pedestal Support/Cantilevered Bracket/1 Long Leg	$1467
4	**EZH36F**	36" Overhead Cabinets with Frosted Glass Doors	$791
1	**EZTW72HS**	Technology Wall, 4-Circuit Starter	$2849
1	**EZTW72HA**	Technology Wall, 4-Circuit Adder	$2692

TOTAL: $14573

NOTE: 4-Circuit Power provided.

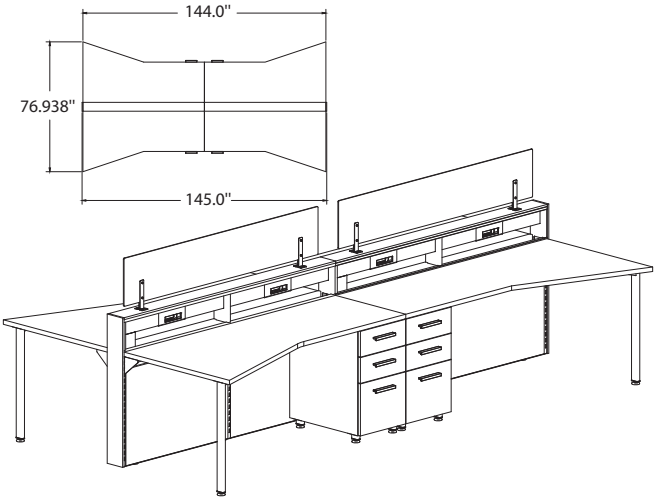

e5 BENCHING TYPICAL #20

Consists of:

QTY.	MODEL NO.	DESCRIPTION	LIST PRICE EACH
2	**EZHL7224KB**	72" x 24" Left-Hand Hatchets with BBF Pedestal Support/Cantilevered Bracket/ 1 Long Leg	$1467
2	**EZHR7224KB**	72" x 24" Right-Hand Hatchets with BBF Pedestal Support/Cantilevered Bracket/ 1 Long Leg	$1467
1	**EZTW72HS**	Technology Wall, 4-Circuit Starter	$2849
1	**EZTW72HA**	Technology Wall, 4-Circuit Adder	$2692
2	**EZASP66**	66" Acrylic Privacy Panel	$448

TOTAL: $12305

NOTE: 4-Circuit Power provided.

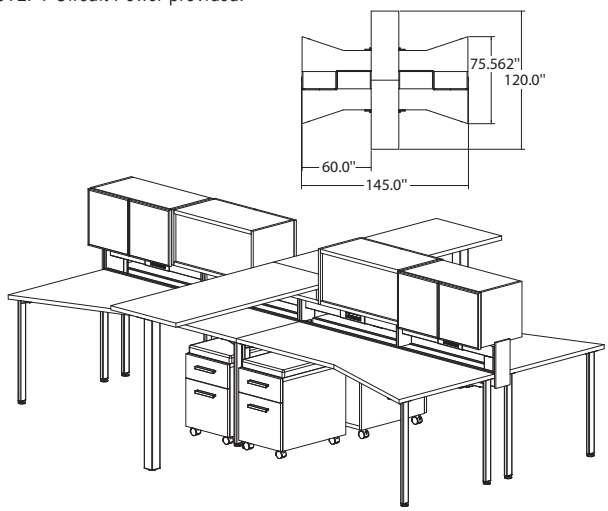

e5 BENCHING TYPICAL #21

Consists of:

QTY.	MODEL NO.	DESCRIPTION	LIST PRICE EACH
2	**EZHL7224LL**	72" x 24" Left-Hand Hatchets with 1 Long Leg	$870
2	**EZHR7224LL**	72" x 24" Right-Hand Hatchets with 1 Long Leg	$870
1	**EZP6024D**	Double-sided Standing Height Peninsula Table	$1251
4	**EZH30F**	30" Overhead Cabinets with Frosted Glass Doors	$750
4	**EZPM24BF**	Mobile Pedestal	$620
4	**EZSC15**	Upholstered Cushion	$277
1	**EZTB72HS**	Technology Beltway, 4-Circuit Starter	$1820
1	**EZTB72HA**	Technology Beltway, 4-Circuit Adder	$1664

TOTAL: $14803

e5 IDEA STARTERS – NOT AVAILABLE ON QUICK-SHIP PROGRAM

- Must order by component level.

NOTE: 4-Circuit Power provided.

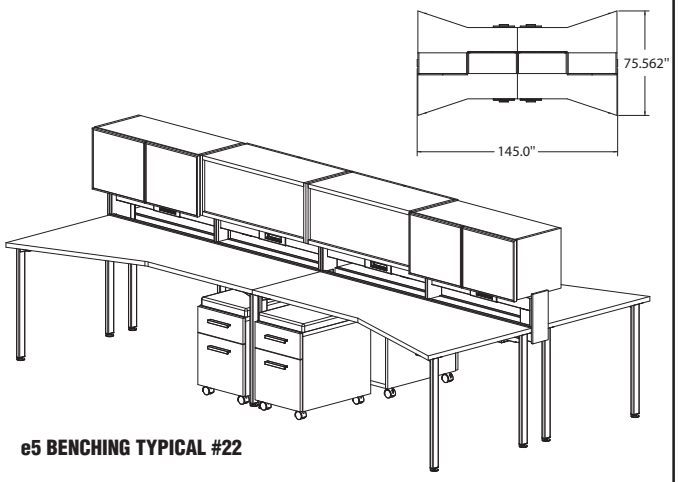

e5 BENCHING TYPICAL #22

Consists of:

QTY.	MODEL NO.	DESCRIPTION	LIST PRICE EACH
2	**EZHL7224LL**	72" x 24" Left-Hand Hatchets with 1 Long Leg	$870
2	**EZHR7224LL**	72" x 24" Right-Hand Hatchets with 1 Long Leg	$870
4	**EZH36F**	36" Overhead Cabinets with Frosted Glass Doors	$791
4	**EZPM24BF**	Mobile Pedestal	$620
4	**EZSC15**	Upholstered Cushion	$277
1	**EZTB72HS**	Technology Beltway, 4-Circuit Starter	$1820
1	**EZTB72HA**	Technology Beltway, 4-Circuit Adder	$1664

TOTAL: $13716

NOTE: 4-Circuit Power provided.

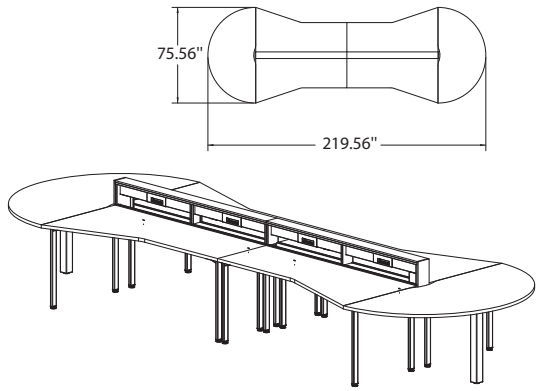

e5 BENCHING TYPICAL #23A

Consists of:

QTY.	MODEL NO.	DESCRIPTION	LIST PRICE EACH
2	**EZHL7224LL**	72" x 24" Left-Hand Hatchets with 1 Long Leg	$870
2	**EZHR7224LL**	72" x 24" Right-Hand Hatchets with 1 Long Leg	$870
1	**EZTB72HS**	Technology Beltway, 4-Circuit Starter	$1820
1	**EZTB72HA**	Technology Beltway, 4-Circuit Adder	$1664
1	**EZHR76**	Half Round Table Kit for back-to-back Tables w/Beltway	$856

TOTAL: $7820

NOTE: Single-Circuit Power provided.

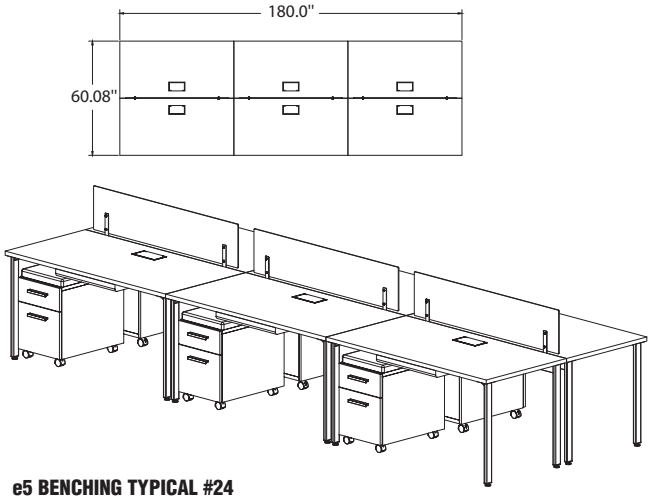

e5 BENCHING TYPICAL #24

Consists of:

QTY.	MODEL NO.	DESCRIPTION	LIST PRICE EACH
6	**EZ6030LL**	60" x 30" Tops with Long Legs	$676
6	**EZPM24BF**	Mobile Pedestals	$620
6	**EZSC15***	Cushions	$277
3	**EZAPP54**	Privacy Screens	$396
6	**19400**	Pencil Drawers	$91
1	**ECS**	72", Single-Circuit Infeed	$267
6	**EC60FS**	60" Table Power Kit	$542

TOTAL: $14691

*Grade Two fabric only on cushions when part of this Typical.

NOTE: 4-Circuit Power provided.

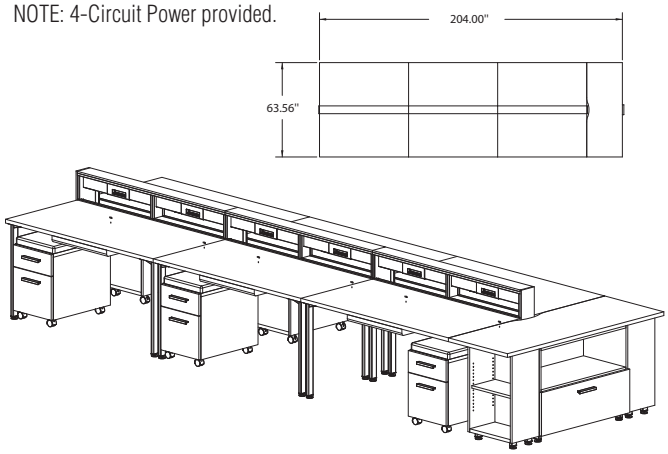

e5 BENCHING TYPICAL #25A

Consists of:

QTY.	MODEL NO.	DESCRIPTION	LIST PRICE EACH
6	**EZ6030LL**	60" x 30" Tops with Long Legs	$676
6	**EZPM24BF**	Mobile Pedestals	$620
6	**EZSC15***	Cushions	$277
6	**19400**	Pencil Drawers	$91
1	**EZTB60HS**	Technology Beltway, 4-Circuit Starter	$1725
2	**EZTB60HA**	Technology Beltway, 4-Circuit Adder	$1559
1	**EZR64**	Productivity Top for back-to-back Tables w/Beltway	$480
1	**EZ3628FNT**	Open Top/Lateral File Bottom Cabinet	$1232
2	**EZFC18**	End Cabinet Book Shelf	$562

TOTAL: $17663

*Grade Two fabric only on cushions when part of this Typical.

e5 IDEA STARTERS – NOT AVAILABLE ON QUICK-SHIP PROGRAM

• Must order by component level.
NOTE: 4-Circuit Power provided.

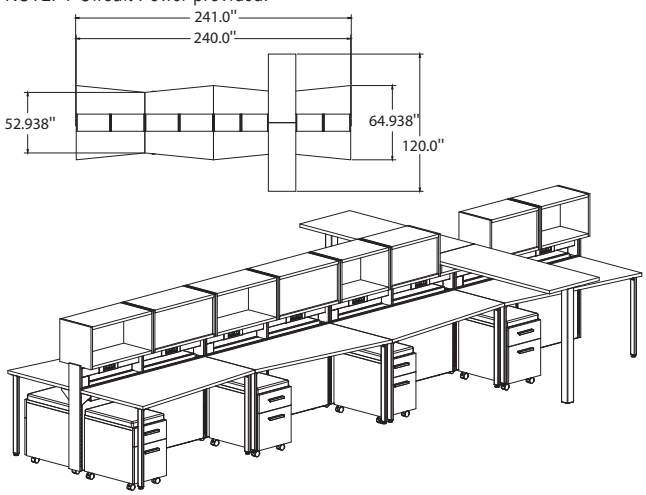

e5 BENCHING TYPICAL #26

Consists of:

QTY.	MODEL NO.	DESCRIPTION	LIST PRICE EACH
4	**EZTL60LW**	60"L Tapered Worksurface/Left-Handed/Cantilevered	$596
4	**EZTR60LW**	60"L Tapered Worksurface/Right-Handed/Cantilevered	$596
2	**EZP6024**	Standing Height Peninsula Tables	$648
8	**EZPM24BF**	Mobile Pedestal	$620
8	**EZSC15***	Seat Cushion for Mobile Pedestal	$277
4	**EZH30**	30" Overhead Cabinet	$426
4	**EZH24**	24" Overhead Cabinet	$391
1	**EZTW60HS**	Technology Wall, 4-Circuit Starter	$2658
3	**EZTW60HA**	Technology Wall, 4-Circuit Adder	$2492

TOTAL: $26642

*Grade Two fabric only on cushions when part of this Typical.

NOTE: 4-Circuit Power provided.

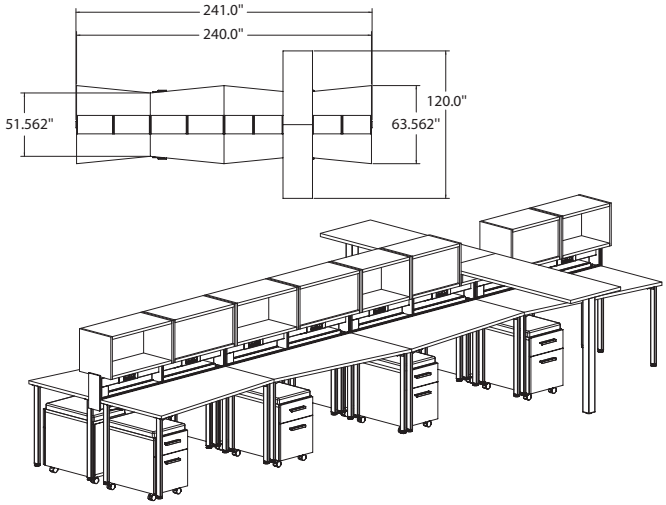

e5 BENCHING TYPICAL #27

Consists of:

QTY.	MODEL NO.	DESCRIPTION	LIST PRICE EACH
4	**EZTL60LL**	60"L Tapered Worksurface/Left-Handed	$713
4	**EZTR60LL**	60"L Tapered Worksurface/Right-Handed	$713
2	**EZP6024**	Standing Height Peninsula Tables	$648
8	**EZPM24BF**	Mobile Pedestal	$620
8	**EZSC15***	Seat Cushion for Mobile Pedestal	$277
4	**EZH30**	30" Overhead Cabinet	$426
4	**EZH24**	24" Overhead Cabinet	$391
1	**EZTB60HS**	Technology Beltway, 4-Circuit Starter	$1725
3	**EZTB60HA**	Technology Beltway, 4-Circuit Adder	$1559

TOTAL: $23846

*Grade Two fabric only on cushions when part of this Typical.

NOTE: 4-Circuit Power provided.

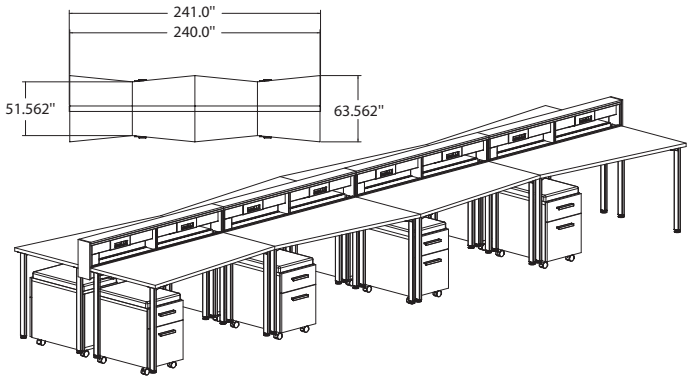

e5 BENCHING TYPICAL #28

Consists of:

QTY.	MODEL NO.	DESCRIPTION	LIST PRICE EACH
4	**EZTL60LL**	60"L Tapered Worksurface/Left-Handed	$713
4	**EZTR60LL**	60"L Tapered Worksurface/Right-Handed	$713
8	**EZPM24BF**	Mobile Pedestal	$620
8	**EZSC15***	Seat Cushion for Mobile Pedestal	$277
1	**EZTB60HS**	Technology Beltway, 4-Circuit Starter	$1725
3	**EZTB60HA**	Technology Beltway, 4-Circuit Adder	$1559

TOTAL: $19282

*Grade Two fabric only on cushions when part of this Typical.

e5 WORKSURFACES AND SUPPORTS – COMPLETE ASSEMBLIES

Make specifying easy; choose an assembly that is ordered with one model number complete.

- 1 1/8" Thermally Fused Laminate worksurfaces available in 6 colors with matching 2mm PVC edging – Summer Suede, Cocoa, Biltmore Cherry, Designer White, Columbian Walnut and Raven.
- **Legs available in White, Black and Silver. Specify paint color.**
- Assemblies consist of a worksurface, support, surface support channel, and optional modesty panels.
- All assemblies include hardware and installation instructions.
- Optional modesty panels are available in frosted acrylic or laminate with attachment hardware included.
- Short legs are intended to be used with Layered Height Storage Cabinets.

RECTANGULAR SURFACE/LEG SUPPORT ASSEMBLIES

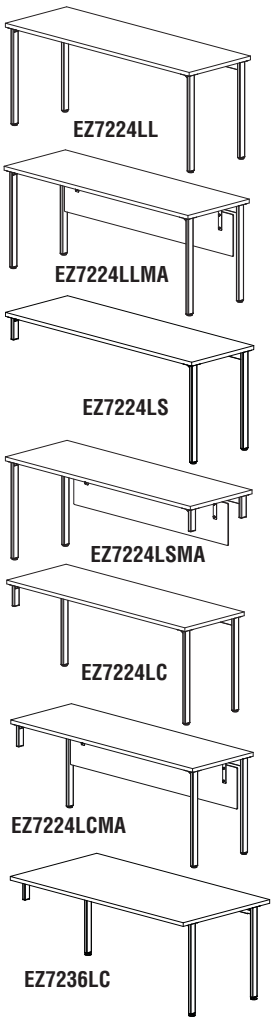

Model No.	Dimensions	List Price	Laminate Modesty Panel (+ML)	Acrylic Modesty Panel (+MA)
Surface/4 Standard Legs				
EZ4824LL	48"W x 24"D x 29 1/2"H	$638	$965	$1085
EZ6024LL	60"W x 24"D x 29 1/2"H	$670	$1031	$1282
EZ7224LL	72"W x 24"D x 29 1/2"H	$710	$1083	$1347
EZ4830LL	48"W x 30"D x 29 1/2"H	$645	$971	$1091
EZ6030LL	60"W x 30"D x 29 1/2"H	$676	$1038	$1121
EZ7230LL	72"W x 30"D x 29 1/2"H	$720	$1093	$1357
EZ6036LL	60"W x 36"D x 29 1/2"H	$727	$1089	$1338
EZ7236LL	72"W x 36"D x 29 1/2"H	$774	$1147	$1408
Surface/2 Standard Legs/2 Short Legs				
EZ4824LS	48"W x 24"D x 29 1/2"H	$606	$928	$1024
EZ6024LS	60"W x 24"D x 29 1/2"H	$637	$968	$1250
EZ7224LS	72"W x 24"D x 29 1/2"H	$677	$1044	$1305
EZ4830LS	48"W x 30"D x 29 1/2"H	$612	$934	$1030
EZ6030LS	60"W x 30"D x 29 1/2"H	$644	$974	$1256
EZ7230LS	72"W x 30"D x 29 1/2"H	$688	$1054	$1316
EZ6036LS	60"W x 36"D x 29 1/2"H	$695	$1025	$1304
EZ7236LS	72"W x 36"D x 29 1/2"H	$742	$1109	$1367
Surface/3 Standard Legs/1 Short Leg				
EZ4824LC	48"W x 24"D x 29 1/2"H	$627	$953	$1074
EZ6024LC	60"W x 24"D x 29 1/2"H	$658	$1020	$1272
EZ7224LC	72"W x 24"D x 29 1/2"H	$698	$1071	$1337
EZ6030LC	60"W x 30"D x 29 1/2"H	$665	$1026	$1278
EZ7230LC	72"W x 30"D x 29 1/2"H	$709	$1082	$1346
EZ6036LC	60"W x 36"D x 29 1/2"H	$716	$1077	$1326
EZ7236LC	72"W x 36"D x 29 1/2"H	$763	$1136	$1398

RECTANGULAR SURFACE/FULL END PANEL SUPPORT ASSEMBLIES

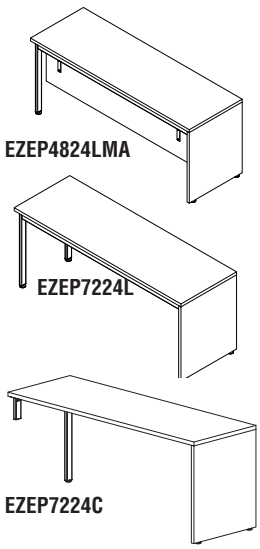

Model No.	Dimensions	List Price	Laminate Modesty Panel (+ML)	Acrylic Modesty Panel (+MA)
Surface/End Panel/2 Standard Legs				
EZEP4824L	48"W x 24"D x 29 1/2"H	$642	$968	$1088
EZEP6024L	60"W x 24"D x 29 1/2"H	$686	$1047	$1298
EZEP7224L	72"W x 24"D x 29 1/2"H	$789	$1162	$1422
EZEP4830L	48"W x 30"D x 29 1/2"H	$794	$1120	$1233
EZEP6030L	60"W x 30"D x 29 1/2"H	$739	$1100	$1348
EZEP7230L	72"W x 30"D x 29 1/2"H	$802	$1175	$1435
EZEP6036L	60"W x 36"D x 29 1/2"H	$794	$1156	$1400
EZEP7236L	72"W x 36"D x 29 1/2"H	$857	$1230	$1487
Surface/End Panel/1 Standard Leg/1 Short Leg				
EZEP4824C	48"W x 24"D x 29 1/2"H	$630	$956	$1077
EZEP6024C	60"W x 24"D x 29 1/2"H	$674	$1036	$1286
EZEP7224C	72"W x 24"D x 29 1/2"H	$777	$1151	$1412
EZEP4830C	48"W x 30"D x 29 1/2"H	$783	$1109	$1222
EZEP6030C	60"W x 30"D x 29 1/2"H	$727	$1089	$1338

HOW TO SPECIFY: Select Model No. *(ie., EZ4824LL)*

OPTION 1 Select Modesty Panel if desired *(Add Suffix)* ML *(Laminate Panel)*; MA *(Acrylic Panel)*

OPTION 2 Select Laminate *See page 8 for colors*

OPTION 3 Select Paint Finish for metal parts TKSV *(Tech Silver)*; BLCK *(Black)*; WHIT *(White)*

e5 WORKSURFACES AND SUPPORTS – COMPLETE ASSEMBLIES

RECTANGULAR SURFACE/FULL END PANEL SUPPORT ASSEMBLIES (CONTINUED)

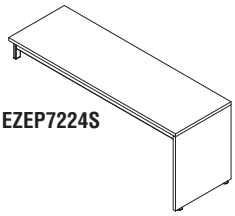
EZEP7224S

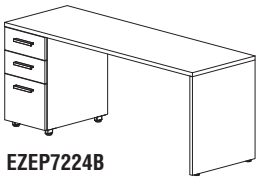
EZEP7224B

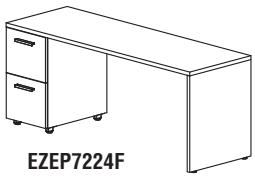
EZEP7224F

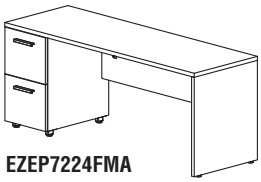
EZEP7224FMA

Model No.	Dimensions	List Price	Laminate Modesty Panel (+ML)	Acrylic Modesty Panel (+MA)
Surface/End Panel/1 Standard Leg/1 Short Leg (continued)				
EZEP7230C	72"W x 30"D x 29 1/2"H	$790	$1163	$1423
EZEP6036C	60"W x 36"D x 29 1/2"H	$783	$1144	$1390
EZEP7236C	72"W x 36"D x 29 1/2"H	$845	$1218	$1449
Surface/End Panel/2 Short Legs				
EZEP4824S	48"W x 24"D x 29 1/2"H	$609	$931	$1027
EZEP6024S	60"W x 24"D x 29 1/2"H	$653	$983	$1264
EZEP7224S	72"W x 24"D x 29 1/2"H	$757	$1123	$1380
EZEP4830S	48"W x 30"D x 29 1/2"H	$762	$1084	$1172
EZEP6030S	60"W x 30"D x 29 1/2"H	$706	$1037	$1316
EZEP7230S	72"W x 30"D x 29 1/2"H	$769	$1136	$1393
EZEP6036S	60"W x 36"D x 29 1/2"H	$762	$1092	$1368
EZEP7236S	72"W x 36"D x 29 1/2"H	$825	$1191	$1445
Surface/End Panel/BBF Pedestal				
EZEP4824B	48"W x 24"D x 29 1/2"H	$1351	$1662	$1681
EZEP6024B	60"W x 24"D x 29 1/2"H	$1395	$1721	$1804
EZEP7224B	72"W x 24"D x 29 1/2"H	$1496	$1858	$2068
EZEP4830B	48"W x 30"D x 29 1/2"H	$1558	$1868	$1878
EZEP6030B	60"W x 30"D x 29 1/2"H	$1503	$1829	$1906
EZEP7230B	72"W x 30"D x 29 1/2"H	$1563	$1925	$2132
EZEP6036B	60"W x 36"D x 29 1/2"H	$1628	$1954	$2025
EZEP7236B	72"W x 36"D x 29 1/2"H	$1689	$2050	$2251
Surface/End Panel/FF Pedestal				
EZEP4824F	48"W x 24"D x 29 1/2"H	$1305	$1616	$1639
EZEP6024F	60"W x 24"D x 29 1/2"H	$1349	$1675	$1760
EZEP7224F	72"W x 24"D x 29 1/2"H	$1450	$1812	$2024
EZEP4830F	48"W x 30"D x 29 1/2"H	$1512	$1822	$1835
EZEP6030F	60"W x 30"D x 29 1/2"H	$1457	$1783	$1862
EZEP7230F	72"W x 30"D x 29 1/2"H	$1517	$1879	$2088
EZEP6036F	60"W x 36"D x 29 1/2"H	$1556	$1882	$1956
EZEP7236F	72"W x 36"D x 29 1/2"H	$1617	$1978	$2182

RECTANGULAR SURFACE/SUPPORT PEDESTAL ASSEMBLIES

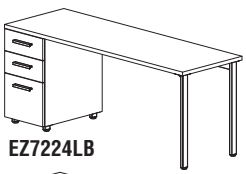
EZ7224LB

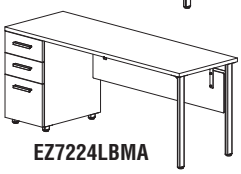
EZ7224LBMA

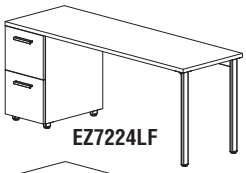
EZ7224LF

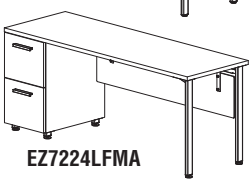
EZ7224LFMA

Model No.	Dimensions	List Price	Laminate Modesty Panel (+ML)	Acrylic Modesty Panel (+MA)
Surface/BBF Pedestal/2 Standard Legs				
EZ4824LB	48"W x 24"D x 29 1/2"H	$1349	$1659	$1679
EZ6024LB	60"W x 24"D x 29 1/2"H	$1379	$1705	$1789
EZ7224LB	72"W x 24"D x 29 1/2"H	$1420	$1782	$1996
EZ6030LB	60"W x 30"D x 29 1/2"H	$1440	$1766	$1847
EZ7230LB	72"W x 30"D x 29 1/2"H	$1485	$1847	$2057
EZ6036LB	60"W x 36"D x 29 1/2"H	$1561	$1887	$1961
EZ7236LB	72"W x 36"D x 29 1/2"H	$1609	$1971	$2175
Surface/FF Pedestal/2 Standard Legs				
EZ4824LF	48"W x 24"D x 29 1/2"H	$1303	$1613	$1636
EZ6024LF	60"W x 24"D x 29 1/2"H	$1333	$1659	$1745
EZ7224LF	72"W x 24"D x 29 1/2"H	$1374	$1736	$1952
EZ6030LF	60"W x 30"D x 29 1/2"H	$1394	$1720	$1803
EZ7230LF	72"W x 30"D x 29 1/2"H	$1439	$1801	$2014
EZ6036LF	60"W x 36"D x 29 1/2"H	$1489	$1815	$1894
EZ7236LF	72"W x 36"D x 29 1/2"H	$1537	$1899	$2107

HOW TO SPECIFY: Select Model No. *(ie., EZEP4824S)*

OPTION 1 Select Modesty Panel if desired *(Add Suffix)* ML *(Laminate Panel)*; MA *(Acrylic Panel)*

OPTION 2 Select Laminate *See page 8 for colors*

OPTION 3 Select Paint Finish for metal parts TKSV *(Tech Silver)*; BLCK *(Black)*; WHIT *(White)*

e5 WORKSURFACES AND SUPPORTS – COMPLETE ASSEMBLIES

RECTANGULAR SURFACE/SUPPORT PEDESTAL ASSEMBLIES (CONTINUED)

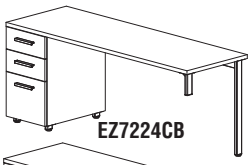
EZ7224CB

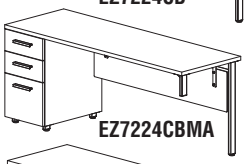
EZ7224CBMA

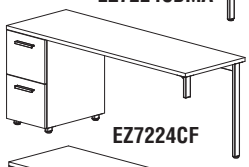
EZ7224CF

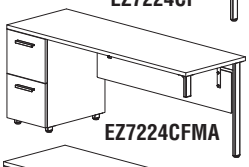
EZ7224CFMA

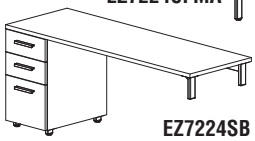
EZ7224SB

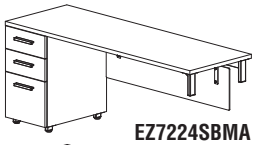
EZ7224SBMA

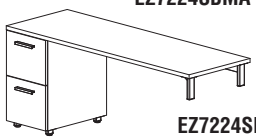
EZ7224SF

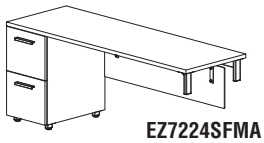
EZ7224SFMA

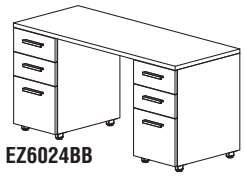
EZ6024BB

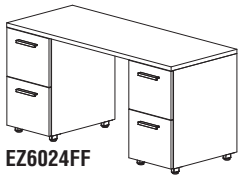
EZ6024FF

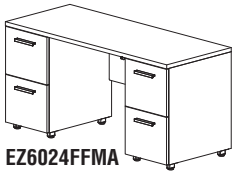
EZ6024FFMA

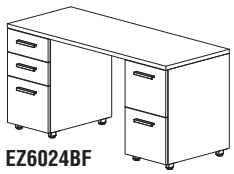
EZ6024BF

Model No.	Dimensions	List Price	Laminate Modesty Panel (+ML)	Acrylic Modesty Panel (+MA)
Surface/BBF Pedestal/1 Standard Leg/1 Short Leg				
EZ4824CB	48"W x 24"D x 29 1/2"H	$1338	$1648	$1669
EZ6024CB	60"W x 24"D x 29 1/2"H	$1368	$1694	$1778
EZ7224CB	72"W x 24"D x 29 1/2"H	$1409	$1770	$1984
EZ6030CB	60"W x 30"D x 29 1/2"H	$1429	$1755	$1836
EZ7230CB	72"W x 30"D x 29 1/2"H	$1473	$1835	$2046
EZ6036CB	60"W x 36"D x 29 1/2"H	$1550	$1876	$1951
EZ7236CB	72"W x 36"D x 29 1/2"H	$1598	$1959	$2164
Surface/FF Pedestal/1 Standard Leg/1 Short Leg				
EZ4824CF	48"W x 24"D x 29 1/2"H	$1292	$1602	$1625
EZ6024CF	60"W x 24"D x 29 1/2"H	$1322	$1648	$1735
EZ7224CF	72"W x 24"D x 29 1/2"H	$1363	$1724	$1941
EZ6030CF	60"W x 30"D x 29 1/2"H	$1383	$1709	$1792
EZ7230CF	72"W x 30"D x 29 1/2"H	$1427	$1789	$2002
EZ6036CF	60"W x 36"D x 29 1/2"H	$1478	$1804	$1882
EZ7236CF	72"W x 36"D x 29 1/2"H	$1526	$1887	$2095
Surface/BBF Pedestal/2 Short Legs				
EZ4824SB	48"W x 24"D x 29 1/2"H	$1317	$1623	$1640
EZ6024SB	60"W x 24"D x 29 1/2"H	$1347	$1653	$1728
EZ7224SB	72"W x 24"D x 29 1/2"H	$1388	$1718	$1963
EZ6030SB	60"W x 30"D x 29 1/2"H	$1408	$1729	$1786
EZ7230SB	72"W x 30"D x 29 1/2"H	$1453	$1783	$2024
EZ6036SB	60"W x 36"D x 29 1/2"H	$1529	$1851	$1901
EZ7236SB	72"W x 36"D x 29 1/2"H	$1577	$1907	$2142
Surface/FF Pedestal/2 Short Legs				
EZ4824SF	48"W x 24"D x 29 1/2"H	$1271	$1577	$1597
EZ6024SF	60"W x 24"D x 29 1/2"H	$1301	$1623	$1685
EZ7224SF	72"W x 24"D x 29 1/2"H	$1342	$1672	$1919
EZ6030SF	60"W x 30"D x 29 1/2"H	$1362	$1683	$1742
EZ7230SF	72"W x 30"D x 29 1/2"H	$1407	$1737	$1980
EZ6036SF	60"W x 36"D x 29 1/2"H	$1457	$1779	$1833
EZ7236SF	72"W x 36"D x 29 1/2"H	$1505	$1835	$2074
Surface/2 BBF Pedestals				
EZ6024BB	60"W x 24"D x 29 1/2"H	$2089	$2395	$2373
EZ7224BB	72"W x 24"D x 29 1/2"H	$2132	$2454	$2474
EZ6030BB	60"W x 30"D x 29 1/2"H	$2204	$2510	$2483
EZ7230BB	72"W x 30"D x 29 1/2"H	$2251	$2573	$2587
EZ6036BB	60"W x 36"D x 29 1/2"H	$2395	$2701	$2665
EZ7236BB	72"W x 36"D x 29 1/2"H	$2445	$2767	$2667
Surface/2 FF Pedestals				
EZ6024FF	60"W x 24"D x 29 1/2"H	$1997	$2303	$2286
EZ7224FF	72"W x 24"D x 29 1/2"H	$2040	$2362	$2387
EZ6030FF	60"W x 30"D x 29 1/2"H	$2112	$2418	$2398
EZ7230FF	72"W x 30"D x 29 1/2"H	$2159	$2481	$2503
EZ6036FF	60"W x 36"D x 29 1/2"H	$2251	$2557	$2528
EZ7236FF	72"W x 36"D x 29 1/2"H	$2301	$2623	$2634
Surface/BBF Pedestal/FF Pedestal				
EZ6024BF	60"W x 24"D x 29 1/2"H	$2043	$2349	$2330
EZ7224BF	72"W x 24"D x 29 1/2"H	$2086	$2408	$2431
EZ6030BF	60"W x 30"D x 29 1/2"H	$2158	$2464	$2439
EZ7230BF	72"W x 30"D x 29 1/2"H	$2205	$2527	$2544
EZ6036BF	60"W x 36"D x 29 1/2"H	$2323	$2629	$2596
EZ7236BF	72"W x 36"D x 29 1/2"H	$2373	$2695	$2703

HOW TO SPECIFY: Select Model No. *(ie., EZ4824CB)*

OPTION 1 Select Modesty Panel if desired *(Add Suffix)* ML *(Laminate Panel)*; MA *(Acrylic Panel)*

OPTION 2 Select Laminate *See page 8 for colors*

OPTION 3 Select Paint Finish for metal parts TKSV *(Tech Silver)*; BLCK *(Black)*; WHIT *(White)*

e5 WORKSURFACES AND SUPPORTS – COMPLETE ASSEMBLIES

HATCHET SURFACE/SUPPORT COMPLETE ASSEMBLIES

Model No.	Description	Dimensions	List Price	Laminate Modesty Panel (+ML)	Acrylic Modesty Panel (+MA)
EZHL7224LL	Hatchet Left Surface w/4 Standard Legs	72"W x 36"-24"D x 29 1/2"H	$870	$1244	$1489
EZHL7224SS	Hatchet Left Surface w/4 Short Legs	72"W x 36"-24"D x 29 1/2"H	$806	$1167	$1412
EZHL7224LC	Hatchet Left Surface w/3 Standard Legs & 1 Short Leg	72"W x 36"-24"D x 29 1/2"H	$859	$1226	$1479
EZHL7224LS	Hatchet Left Surface w/2 Standard Legs & 2 Short Legs	72"W x 36"-24"D x 29 1/2"H	$838	$1205	$1459
EZHL7224LB	Hatchet Left Surface w/2 Std. Legs & 1 BBF Pedestal	72"W x 36"-24"D x 29 1/2"H	$1581	$1943	$2149
EZHL7224LF	Hatchet Left Surface w/2 Std. Legs & 1 FF Pedestal	72"W x 36"-24"D x 29 1/2"H	$1535	$1818	$2105
EZHL7224SB	Hatchet Left Surface w/2 Short Legs & 1 BBF Pedestal	72"W x 36"-24"D x 29 1/2"H	$1549	$1879	$2115
EZHL7224SF	Hatchet Left Surface w/2 Short Legs & 1 FF Pedestal	72"W x 36"-24"D x 29 1/2"H	$1503	$1833	$2072
EZHR7224LL	Hatchet Right Surface w/4 Standard Legs	72"W x 36"-24"D x 29 1/2"H	$870	$1244	$1489
EZHR7224SS	Hatchet Right Surface w/4 Short Legs	72"W x 36"-24"D x 29 1/2"H	$806	$1167	$1412
EZHR7224LC	Hatchet Right Surface w/3 Standard Legs & 1 Short Leg	72"W x 36"-24"D x 29 1/2"H	$859	$1226	$1479
EZHR7224LS	Hatchet Right Surface w/2 Standard Legs & 2 Short Legs	72"W x 36"-24"D x 29 1/2"H	$838	$1205	$1459
EZHR7224LB	Hatchet Right Surface w/2 Std. Legs & 1 BBF Pedestal	72"W x 36"-24"D x 29 1/2"H	$1581	$1943	$2149
EZHR7224LF	Hatchet Right Surface w/2 Std. Legs & 1 FF Pedestal	72"W x 36"-24"D x 29 1/2"H	$1535	$1818	$2105
EZHR7224SB	Hatchet Right Surface w/2 Short Legs & 1 BBF Pedestal	72"W x 36"-24"D x 29 1/2"H	$1549	$1879	$2115
EZHR7224SF	Hatchet Right Surface w/2 Short Legs & 1 FF Pedestal	72"W x 36"-24"D x 29 1/2"H	$1503	$1833	$2072

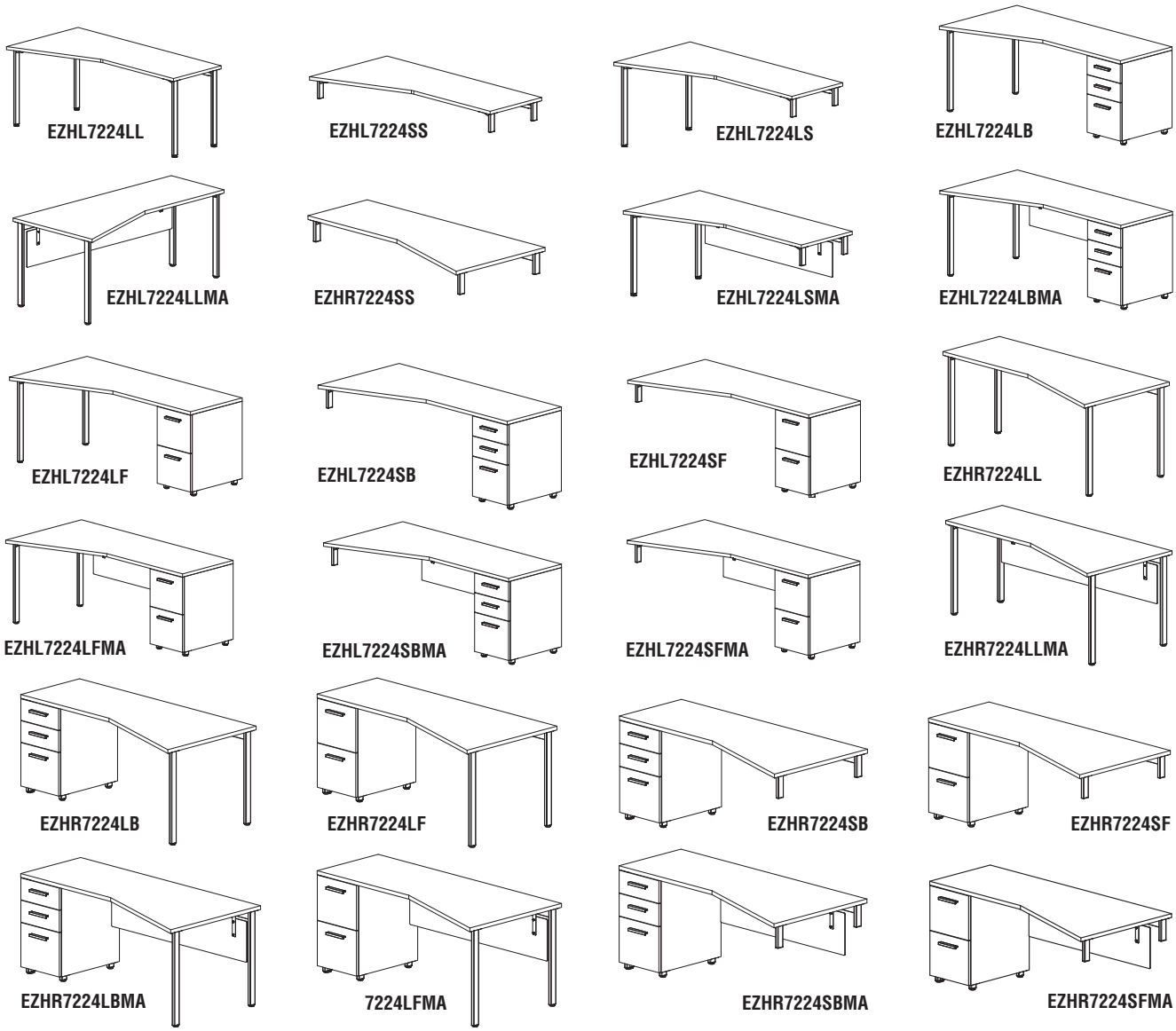

HOW TO SPECIFY: Select Model No. *(ie., EZHL7224LL)*

OPTION 1 Select Modesty Panel if desired *(Add Suffix)* ML *(Laminate Panel)*; MA *(Acrylic Panel)*

OPTION 2 Select Laminate *See page 8 for colors*

OPTION 3 Select Paint Finish for metal parts TKSV *(Tech Silver)*; BLCK *(Black)*; WHIT *(White)*

e5 WORKSURFACES AND SUPPORTS – COMPLETE ASSEMBLIES

TAPERED SURFACE/SUPPORT COMPLETE ASSEMBLIES

Model No.	Description	Dimensions	List Price	Laminate Modesty Panel (+ML)	Acrylic Modesty Panel (+MA)
EZTL60LL	60" Tapered Left Surface w/4 Standard Legs	60"W x 30"-24"D x 29 1/2"H	$713	$1074	$1323
EZTL60SS	60" Tapered Left Surface w/4 Short Legs	60"W x 30"-24"D x 29 1/2"H	$648	$974	$1094
EZTL60LC	60" Tapered Left Surface w/3 Std. Legs & 1 Short Leg	60"W x 30"-24"D x 29 1/2"H	$701	$1063	$1313
EZTL60LS	60" Tapered Left Surface w/2 Std. Legs & 2 Short Legs	60"W x 30"-24"D x 29 1/2"H	$690	$1020	$1300
EZTL72LL	72" Tapered Left Surface w/4 Standard Legs	72"W x 30"-24"D x 29 1/2"H	$763	$1136	$1398
EZTL72SS	72" Tapered Left Surface w/4 Short Legs	72"W x 30"-24"D x 29 1/2"H	$698	$1060	$1309
EZTL72LC	72" Tapered Left Surface w/3 Std. Legs & 1 Short Leg	72"W x 30"-24"D x 29 1/2"H	$751	$1124	$1387
EZTL72LS	72" Tapered Left Surface w/2 Std. Legs & 2 Short Legs	72"W x 30"-24"D x 29 1/2"H	$740	$1101	$1349
EZTR60LL	60" Tapered Right Surface w/4 Standard Legs	60"W x 30"-24"D x 29 1/2"H	$713	$1074	$1313
EZTR60SS	60" Tapered Right Surface w/4 Short Legs	60"W x 30"-24"D x 29 1/2"H	$648	$974	$1094
EZTR60LC	60" Tapered Right Surface w/3 Std. Legs & 1 Short Leg	60"W x 30"-24"D x 29 1/2"H	$701	$1063	$1313
EZTR60LS	60" Tapered Right Surface w/2 Std. Legs & 2 Short Legs	60"W x 30"-24"D x 29 1/2"H	$690	$1020	$1300
EZTR72LL	72" Tapered Right Surface w/4 Standard Legs	72"W x 30"-24"D x 29 1/2"H	$763	$1136	$1398
EZTR72SS	72" Tapered Right Surface w/4 Short Legs	72"W x 30"-24"D x 29 1/2"H	$698	$1060	$1309
EZTR72LC	72" Tapered Right Surface w/3 Std. Legs & 1 Short Leg	72"W x 30"-24"D x 29 1/2"H	$751	$1124	$1387
EZTR72LS	72" Tapered Right Surface w/2 Std. Legs & 2 Short Legs	72"W x 30"-24"D x 29 1/2"H	$740	$1101	$1349

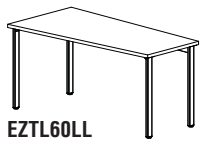
EZTL60LL

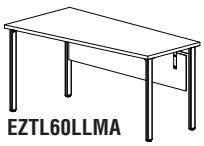
EZTL60LLMA

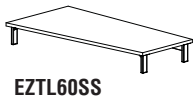
EZTL60SS

EZTL60LS

EZTL60LSMA

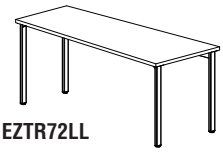
EZTR72LL

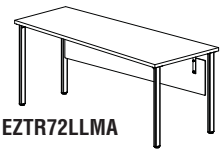
EZTR72LLMA

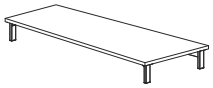
EZTR72SS

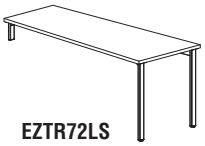
EZTR72LS

EZTR72LSMA

BRIDGE SURFACE/SUPPORT COMPLETE ASSEMBLIES

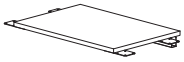
EZ3624RR

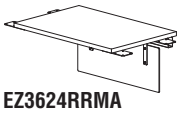
EZ3624RRMA

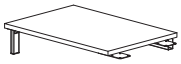
EZ3624SR

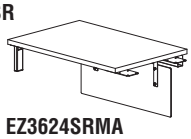
EZ3624SRMA

Model No.	Dimensions	List Price	Laminate Modesty Panel (+ML)	Acrylic Modesty Panel (+MA)
Bridge Surface with 4 Attaching Brackets				
EZ3624RR	36"W x 24"D x 29 1/2"H	$327	$637	$709
EZ4224RR	42"W x 24"D x 29 1/2"H	$379	$953	$809
EZ4824RR	48"W x 24"D x 29 1/2"H	$422	$748	$880
Bridge Surface with 2 Short Legs & 2 Attaching Brackets				
EZ3624SR	36"W x 24"D x 29 1/2"H	$438	$748	$814
EZ4224SR	42"W x 24"D x 29 1/2"H	$456	$777	$882
EZ4824SR	48"W x 24"D x 29 1/2"H	$501	$827	$954

HOW TO SPECIFY: Select Model No. *(ie., EZTL60LL)*

OPTION 1 Select Modesty Panel if desired *(Add Suffix)* ML *(Laminate Panel)*; MA *(Acrylic Panel)*

OPTION 2 Select Laminate *See page 8 for colors*

OPTION 3 Select Paint Finish for metal parts TKSV *(Tech Silver)*; BLCK *(Black)*; WHIT *(White)*

e5 WORKSURFACES AND SUPPORTS – COMPLETE ASSEMBLIES

RETURN SURFACE/SUPPORT COMPLETE ASSEMBLIES

Model No.	Description	Dimensions	List Price	Laminate Modesty Panel (+ML)	Acrylic Modesty Panel (+MA)
Return Surface with Full End Panel & 2 Attaching Brackets					
EZEP3624R	Surface/24" End Panel/Bracket	36"W x 24"D x 29 1/2"H	$459	$769	$825
EZEP4224R	Surface/24" End Panel/Bracket	42"W x 24"D x 29 1/2"H	$491	$817	$915
EZEP4824R	Surface/24" End Panel/Bracket	48"W x 24"D x 29 1/2"H	$535	$861	$986
EZEP3630R	Surface/30" End Panel/Bracket	36"W x 30"D x 29 1/2"H	$516	$827	$888
EZEP4230R	Surface/30" End Panel/Bracket	42"W x 30"D x 29 1/2"H	$556	$878	$977
EZEP4830R	Surface/30" End Panel/Bracket	48"W x 30"D x 29 1/2"H	$688	$1014	$1132
Return Surface with 2 Standard Legs & 2 Attaching Brackets					
EZ3624LR	Surface/Long Legs/Bracket	36"W x 24"D x 29 1/2"H	$470	$781	$844
EZ4224LR	Surface/Long Legs/Bracket	42"W x 24"D x 29 1/2"H	$488	$810	$912
EZ4824LR	Surface/Long Legs/Bracket	48"W x 24"D x 29 1/2"H	$533	$859	$984
EZ3630LR	Surface/Long Legs/Bracket	36"W x 30"D x 29 1/2"H	$461	$771	$836
EZ4230LR	Surface/Long Legs/Bracket	42"W x 30"D x 29 1/2"H	$498	$820	$923
EZ4830LR	Surface/Long Legs/Bracket	48"W x 30"D x 29 1/2"H	$539	$865	$991
Return Surface with 2 Attaching Brackets & 1 Box/Box/File Pedestal					
EZ4824RB	Return/BBF Pedestal/Bracket	48"W x 24"D x 29 1/2"H	$1241	$1548	$1578
EZ4830RB	Return/BBF Pedestal/Bracket	48"W x 30"D x 29 1/2"H	$1302	$1612	$1635
Return Surface with 2 Attaching Brackets & 1 File/File Pedestal					
EZ4824RF	Return/FF Pedestal/Bracket	48"W x 24"D x 29 1/2"H	$1195	$1506	$1534
EZ4830RF	Return/FF Pedestal/Bracket	48"W x 30"D x 29 1/2"H	$1256	$1566	$1592

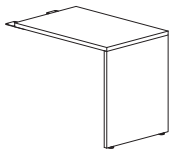
EZEP3624R

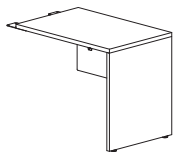
EZEP3624RMA

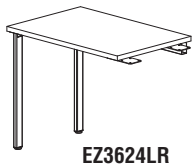
EZ3624LR

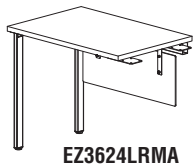
EZ3624LRMA

EZ4824RB

EZ4824RBMA

EZ4824RF

EZ4824RFMA

HOW TO SPECIFY: Select Model No. *(ie., EZEP3624R)*

OPTION 1 Select Modesty Panel if desired *(Add Suffix)* ML *(Laminate Panel)*; MA *(Acrylic Panel)*

OPTION 2 Select Laminate *See page 8 for colors*

OPTION 3 Select Paint Finish for metal parts TKSV *(Tech Silver)*; BLCK *(Black)*; WHIT *(White)*

e5 WORKSURFACES AND SUPPORTS – COMPLETE ASSEMBLIES

- Technology wall is NOT freestanding without purchasing optional Foot Kit.

CANTILEVERED TECH WALL SURFACES/SUPPORT COMPLETE ASSEMBLIES

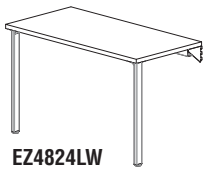
EZ4824LW

EZ7230KB

EZ7230KF

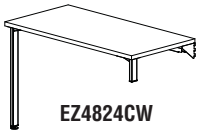
EZ4824CW

EZTL60LW

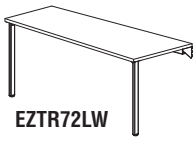
EZTR72LW

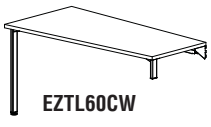
EZTL60CW

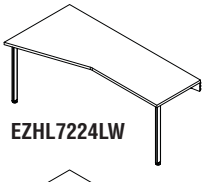
EZHL7224LW

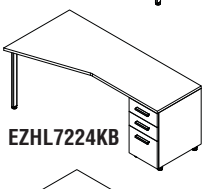
EZHL7224KB

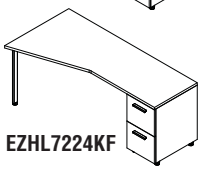
EZHL7224KF

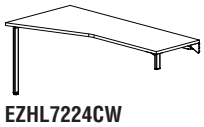
EZHL7224CW

Model No.	Description	Dimensions	List Price
Rectangular Surface with 2 Standard Legs & 2 Cantilevered Brackets			
EZ4824LW		48"W x 24"D x 29 1/2"H	$521
EZ6024LW		60"W x 24"D x 29 1/2"H	$553
EZ7224LW		72"W x 24"D x 29 1/2"H	$593
EZ4830LW		48"W x 30"D x 29 1/2"H	$528
EZ6030LW		60"W x 30"D x 29 1/2"H	$559
EZ7230LW		72"W x 30"D x 29 1/2"H	$603
Rectangular Surface with 1 Standard Leg, 1 Cantilevered Bracket & BBF Pedestal			
EZ4824KB		48"W x 24"D x 29 1/2"H	$1254
EZ6024KB		60"W x 24"D x 29 1/2"H	$1274
EZ7224KB		72"W x 24"D x 29 1/2"H	$1306
EZ4830KB		48"W x 30"D x 29 1/2"H	$1315
EZ6030KB		60"W x 30"D x 29 1/2"H	$1334
EZ7230KB		72"W x 30"D x 29 1/2"H	$1371
Rectangular Surface with 1 Standard Leg, 1 Cantilevered Bracket & FF Pedestal			
EZ4824KF		48"W x 24"D x 29 1/2"H	$1208
EZ6024KF		60"W x 24"D x 29 1/2"H	$1228
EZ7224KF		72"W x 24"D x 29 1/2"H	$1260
EZ4830KF		48"W x 30"D x 29 1/2"H	$1269
EZ6030KF		60"W x 30"D x 29 1/2"H	$1288
EZ7230KF		72"W x 30"D x 29 1/2"H	$1325
Rectangular Surface with 1 Standard Leg, 1 Short Leg & 2 Cantilevered Brackets			
EZ4824CW		48"W x 24"D x 29 1/2"H	$510
EZ6024CW		60"W x 24"D x 29 1/2"H	$541
EZ7224CW		72"W x 24"D x 29 1/2"H	$581
EZ4830CW		48"W x 30"D x 29 1/2"H	$516
EZ6030CW		60"W x 30"D x 29 1/2"H	$548
EZ7230CW		72"W x 30"D x 29 1/2"H	$591
Tapered Surface with 2 Standard Legs & 2 Cantilevered Brackets			
EZTL60LW	Tapered Surface/Left	60"W x 30"-24"D x 29 1/2"H	$596
EZTL72LW	Tapered Surface/Left	72"W x 30"-24"D x 29 1/2"H	$646
EZTR60LW	Tapered Surface/Right	60"W x 30"-24"D x 29 1/2"H	$596
EZTR72LW	Tapered Surface/Right	72"W x 30"-24"D x 29 1/2"H	$646
Tapered Surface with 1 Standard Leg, 1 Short Leg & 2 Cantilevered Brackets			
EZTL60CW	Tapered Surface/Left	60"W x 30"-24"D x 29 1/2"H	$584
EZTL72CW	Tapered Surface/Left	72"W x 30"-24"D x 29 1/2"H	$634
EZTR60CW	Tapered Surface/Right	60"W x 30"-24"D x 29 1/2"H	$584
EZTR72CW	Tapered Surface/Right	72"W x 30"-24"D x 29 1/2"H	$634
Hatchet Surface with 2 Standard Legs & 2 Cantilevered Brackets			
EZHL7224LW	Hatchet Surface/Left	72"W x 36"-24"D x 29 1/2"H	$753
EZHR7224LW	Hatchet Surface/Right	72"W x 36"-24"D x 29 1/2"H	$753
Hatchet Surface with 1 Standard Leg, 1 Cantilevered Bracket & BBF Pedestal			
EZHL7224KB	Hatchet Surface/Left	72"W x 36"-24"D x 29 1/2"H	$1467
EZHR7224KB	Hatchet Surface/Right	72"W x 36"-24"D x 29 1/2"H	$1467
Hatchet Surface with 1 Standard Leg, 1 Cantilevered Bracket & FF Pedestal			
EZHL7224KF	Hatchet Surface/Left	72"W x 36"-24"D x 29 1/2"H	$1421
EZHR7224KF	Hatchet Surface/Right	72"W x 36"-24"D x 29 1/2"H	$1421
Hatchet Surface with 1 Standard Leg, 1 Short Leg & 2 Cantilevered Brackets			
EZHL7224CW	Hatchet Surface/Left	72"W x 36"-24"D x 29 1/2"H	$742
EZHR7224CW	Hatchet Surface/Right	72"W x 36"-24"D x 29 1/2"H	$742

e5 WORKSURFACES AND SUPPORTS – COMPLETE ASSEMBLIES

PENINSULA TABLES

- 1 1/8" Thermally Fused Laminate worksurfaces available in 6 colors with matching 2mm PVC edging.
- Single Painted Steel Post Leg in White, Silver or Black.
- Seated height table provides additional workspace or meeting area.
- Standing height table perfect for collaborative meetings.
- Standing height table includes an under-surface back storage cubbie which is attached to the top and the beltway.
- Standing height table can support an overhead access module (EZCA24 on page 28) that can be a passthrough to the other side of the beltway.

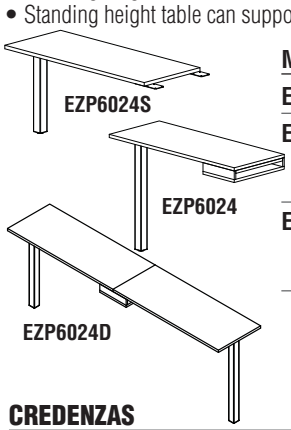

Model No.	Description	Dimensions	Wt.	List Price
EZP6024S	Peninsula Table – Standard Desk Height with Post Leg	60"W x 24"D x 29 1/2"H	61#	$454
EZP6024	Peninsula Table – Standing Height with Post Leg and underneath storage cubicle that attaches to the technology beltway. Ideal for single-sided workstations.	60"W x 24"D x 42"H	70#	$648
EZP6024D	Double-sided Peninsula Table – Standing Height with Post Leg and underneath storage cubicle that attaches to the technology beltway. Ideal for double-sided workstations.	120"W x 24"D x 42"H	70#	$1251

CREDENZAS

- Pedestal and legs are non-handed to allow for installation on right or left.
- File/File (FF) and Box/Box/File (BBF) pedestals available.
- Refer to Overhead Storage Cabinets for above surface credenza storage.
- Optional laminate or acrylic modesty panels.

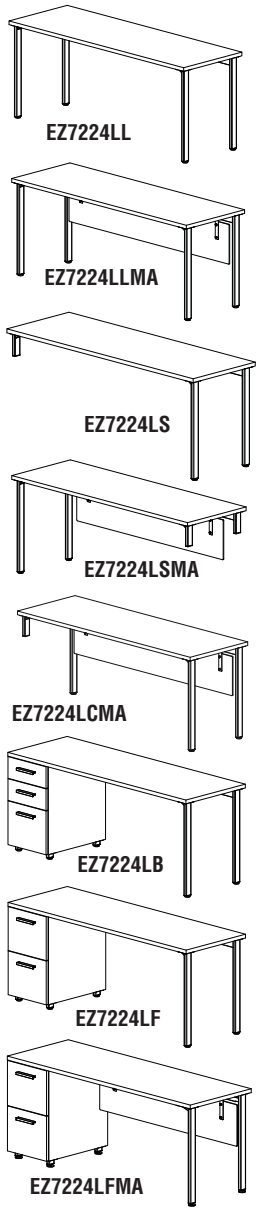

Model No.	Dimensions	List Price	Laminate Modesty Panel (+ML)	Acrylic Modesty Panel (+MA)
Surface/4 Standard Legs				
EZ6024LL	60"W x 24"D x 29 1/2"H	$670	$1031	$1282
EZ7224LL	72"W x 24"D x 29 1/2"H	$710	$1083	$1347
Surface/2 Standard Legs/2 Short Legs				
EZ6024LS	60"W x 24"D x 29 1/2"H	$637	$968	$1250
EZ7224LS	72"W x 24"D x 29 1/2"H	$677	$1044	$1305
Surface/3 Standard Legs/1 Short Leg				
EZ6024LC	60"W x 24"D x 29 1/2"H	$658	$1020	$1272
EZ7224LC	72"W x 24"D x 29 1/2"H	$698	$1071	$1337
Surface/2 Standard Legs/BBF Pedestal				
EZ6024LB	60"W x 24"D x 29 1/2"H	$1379	$1705	$1789
EZ7224LB	72"W x 24"D x 29 1/2"H	$1420	$1782	$1996
Surface/2 Standard Legs/FF Pedestal				
EZ6024LF	60"W x 24"D x 29 1/2"H	$1333	$1659	$1745
EZ7224LF	72"W x 24"D x 29 1/2"H	$1374	$1736	$1952
Surface/2 Short Legs/BBF Pedestal				
EZ6024SB	60"W x 24"D x 29 1/2"H	$1347	$1653	$1728
EZ7224SB	72"W x 24"D x 29 1/2"H	$1388	$1718	$1963
Surface/2 Short Legs/FF Pedestal				
EZ6024SF	60"W x 24"D x 29 1/2"H	$1301	$1623	$1685
EZ7224SF	72"W x 24"D x 29 1/2"H	$1342	$1672	$1919
Surface/2 BBF Pedestals				
EZ6024BB	60"W x 24"D x 29 1/2"H	$2089	$2395	$2373
EZ7224BB	72"W x 24"D x 29 1/2"H	$2132	$2454	$2474
Surface/2 FF Pedestals				
EZ6024FF	60"W x 24"D x 29 1/2"H	$1997	$2303	$2286
EZ7224FF	72"W x 24"D x 29 1/2"H	$2040	$2362	$2387

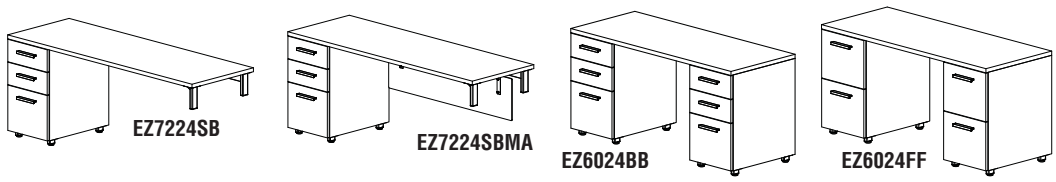

HOW TO SPECIFY: Select Model No. *(ie., EZP6024S)*

OPTION 1 Select Modesty Panel if desired *(Add Suffix)* ML *(Laminate Panel)*; MA *(Acrylic Panel)*

OPTION 2 Select Laminate *See page 8 for colors*

OPTION 3 Select Paint Finish for metal parts TKSV *(Tech Silver)*; BLCK *(Black)*; WHIT *(White)*

e5 WORKSURFACES AND SUPPORTS – COMPLETE ASSEMBLIES

CREDENZAS (CONTINUED)

EZ6024BF

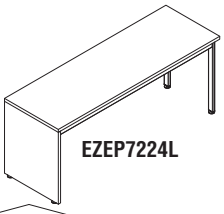
EZEP7224L

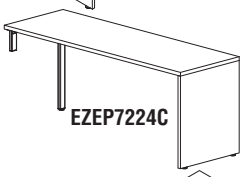
EZEP7224C

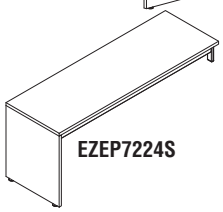
EZEP7224S

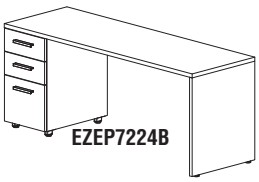
EZEP7224B

Model No.	Dimensions	Wt.	List Price	Laminate Modesty Panel (+ML)	Acrylic Modesty Panel (+MA)
Surface/BBF Pedestal/FF Pedestal					
EZ6024BF	60"W x 24"D x 29 1/2"H		$2043	$2349	$2330
EZ7224BF	72"W x 24"D x 29 1/2"H		$2086	$2408	$2431
Surface/2 Standard Legs/End Panel					
EZEP6024L	60"W x 24"D x 29 1/2"H		$686	$1047	$1298
EZEP7224L	72"W x 24"D x 29 1/2"H		$789	$1162	$1422
Surface/1 Standard Leg/1 Short Leg/End Panel					
EZEP6024C	60"W x 24"D x 29 1/2"H		$674	$1036	$1286
EZEP7224C	72"W x 24"D x 29 1/2"H		$777	$1151	$1412
Surface/2 Short Legs/End Panel					
EZEP6024S	60"W x 24"D x 29 1/2"H		$653	$983	$1264
EZEP7224S	72"W x 24"D x 29 1/2"H		$757	$1123	$1380
Surface/End Panel/BBF Pedestal					
EZEP6024B	60"W x 24"D x 29 1/2"H		$1395	$1721	$1804
EZEP7224B	72"W x 24"D x 29 1/2"H		$1496	$1858	$2068
Surface/End Panel/FF Pedestal					
EZEP6024F	60"W x 24"D x 29 1/2"H		$1349	$1675	$1760
EZEP7224F	72"W x 24"D x 29 1/2"H		$1450	$1812	$2024
Surface Height Storage Cabinets – Upper Divided Open/Bottom Open (Two 36" Cabinets w/Common 1 1/8" Top)					
EZ7228	72"W x 18"D x 29 1/2"H	173#	$1891	N/A	N/A
Surface Height Storage Cabinets – Hinged Laminate Doors (Two 36" Cabinets w/Common 1 1/8" Top)					
EZ7228L	72"W x 18"D x 29 1/2"H	197#	$2300	N/A	N/A

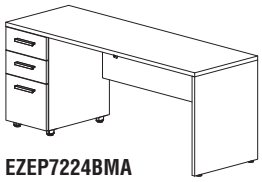
EZEP7224BMA

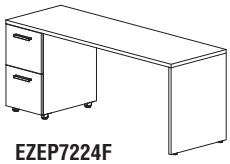
EZEP7224F

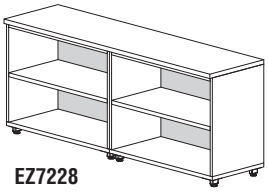
EZ7228

EZ7228L

HOW TO SPECIFY: Select Model No. *(ie., EZ6024BF)*

OPTION 1 Select Modesty Panel if desired *(Add Suffix)* ML *(Laminate Panel)*; MA *(Acrylic Panel)*

OPTION 2 Select Laminate *See page 8 for colors*

OPTION 3 Select Paint Finish for metal parts TKSV *(Tech Silver)*; BLCK *(Black)*; WHIT *(White)*

e5 PRODUCTIVITY AREA (END-OF-RUN)

GSA Intertek

PRODUCTIVITY AREA (STORAGE CABINETS WITH BOOKSHELF)

- Ideal for back-to-back end-of-run applications.
- Ala Carte area by selecting the surface (no legs), undersurface cabinet option, and end-cabinet filler bookshelf (if space permits).
- Each rectangular top surface includes 2 Bridge Brackets and 2 L-Brackets.
- Surfaces overhang lower cabinet by 6" to allow for cable management.

BUILD-AN-END

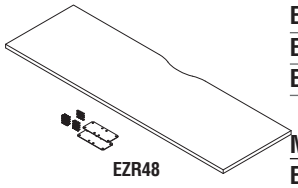

EZR48

Model No.	Description – Rectangular Top Surface	Dimensions	List Price
EZR48	For (2) 24"D Back-to-Back Tables	48"W x 24"D	$438
EZR52	For (2) 24"D Back-to-Back Tables with Beltway	52"W x 24"D	$459
EZR53	For (2) 24"D Back-to-Back Tables with Techwall	53"W x 24"D	$480

Model No.	Description – Rectangular Top Surface	Dimensions	List Price
EZR60	For (2) 30"D Back-to-Back Tables	60"W x 24"D	$459
EZR64	For (2) 30"D Back-to-Back Tables with Beltway	64"W x 24"D	$480
EZR65	For (2) 30"D Back-to-Back Tables with Techwall	65"W x 24"D	$501

Model No.	Description – Rectangular Surface	Dimensions	List Price
EZR72	For (2) 36"D Back-to-Back Tables	72"W x 24"D	$480
EZR76	For (2) 36"D Back-to-Back Tables with Beltway	76"W x 24"D	$501
EZR77	For (2) 36"D Back-to-Back Tables with Techwall	77"W x 24"D	$521

e5 SURFACE HEIGHT STORAGE CABINET OPTIONS

Model No.	Description	Dimensions	List Price
EZ3628FFNT	Double Lateral File Drawer, NO TOP	36"W x 18"D x 28 1/2"H	$1458
EZ3628FNT	Open Upper Lever, Lateral File Drawer Lower, NO TOP	36"W x 18"D x 28 1/2"H	$1232
EZ3628NT	2 Shelf Bookcase, NO TOP	36"W x 18"D x 28 1/2"H	$845
EZ3628LNT	Laminate hinged doors, NO TOP	36"W x 18"D x 28 1/2"H	$1034

END CABINET FILLER BOOK SHELF

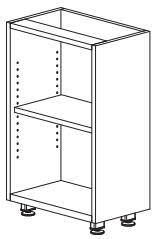

EZFC18

Model No.	Description	Dimensions	List Price
EZFC18	1 Adjustable 9 1/2"D Shelf, Foot Kit, Mounting Screws Filler Shelf	18"W x 11"D x 28 1/2"H	$562

NOTE: Top and Storage Cabinets must be ordered separately.
Two End Cabinet Filler Shelves may be required.

MEETING END

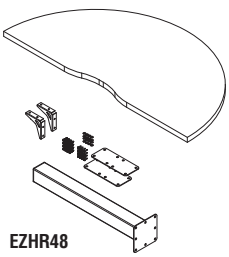

EZHR48

- Includes surface size of your choice, (1) 3" x 3" Leg with adjustable glide, (2) Bridge Brackets and (2) L-Brackets.

Model No.	Description – Half Round Table Kits 48" Dia.	Dimensions	List Price
EZHR48	For (2) 24"D Back-to-Back Tables	48" Diameter	$710
EZHR52	For (2) 24"D Back-to-Back Tables with Beltway	52" Diameter	$730
EZHR53	For (2) 24"D Back-to-Back Tables with Powerwall	53" Diameter	$762

Model No.	Description – Half Round Table Kits 60" Dia.	Dimensions	List Price
EZHR60	For (2) 30"D Back-to-Back Tables	60" Diameter	$783
EZHR64	For (2) 30"D Back-to-Back Tables with Beltway	64" Diameter	$804
EZHR65	For (2) 30"D Back-to-Back Tables with Powerwall	65" Diameter	$856

Model No.	Description – Half Round Table Kits 60" Dia.	Dimensions	List Price
EZHR72	For (2) 36"D Back-to-Back Tables	72" Diameter	$835
EZHR76	For (2) 36"D Back-to-Back Tables with Beltway	76" Diameter	$856
EZHR77	For (2) 36"D Back-to-Back Tables with Powerwall	77" Diameter	$887

e5 ABOVE SURFACE ACRYLIC PRIVACY SCREENS

GSA

Stylish frosted acrylic screens with flame polished edges to give the appearance of glass.
- Standard Green Crystal Ice Acrylic/frosted on both sides. No color specification required.
- Overall screen height with bracket is 12 1/2". Brackets/Hardware included.
- **Painted steel brackets are available in White, Silver or Black. Specify paint finish color.**
- Screens are meant to be space dividers or used for limited privacy – not sound absorbing.
- To specify, choose panel that is 6" shorter than worksurface. (For example, 60"W surface – order EZAPP54 (54"W).)

ACRYLIC PRIVACY PANELS – TABLE TOP MOUNTED OPTION (ATTACHES UNDERNEATH SURFACE)

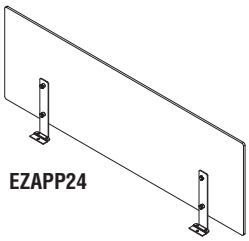

EZAPP24

Model No.	Dimensions	List Price
EZAPP18	18"W x 3/16"D x 12 1/2"H	$271
EZAPP24	24"W x 3/16"D x 12 1/2"H	$292
EZAPP30	30"W x 3/16"D x 12 1/2"H	$312
EZAPP36	36"W x 3/16"D x 12 1/2"H	$323
EZAPP42	42"W x 3/16"D x 12 1/2"H	$344
EZAPP48	48"W x 3/16"D x 12 1/2"H	$365
EZAPP54	54"W x 3/16"D x 12 1/2"H	$396
EZAPP60	60"W x 3/16"D x 12 1/2"H	$417
EZAPP66	66"W x 3/16"D x 12 1/2"H	$448

ACRYLIC PRIVACY PANELS – TABLE/BELTWAY/CABINET MOUNTED OPTION (ATTACHES TO TOP OF SURFACE)

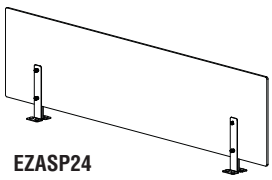

EZASP24

Model No.	Dimensions	List Price
EZASP24	24"W x 3/16"D x 12 1/2"H	$292
EZASP30	30"W x 3/16"D x 12 1/2"H	$312
EZASP36	36"W x 3/16"D x 12 1/2"H	$323
EZASP42	42"W x 3/16"D x 12 1/2"H	$344
EZASP48	48"W x 3/16"D x 12 1/2"H	$365
EZASP54	54"W x 3/16"D x 12 1/2"H	$396
EZASP60	60"W x 3/16"D x 12 1/2"H	$417
EZASP66	66"W x 3/16"D x 12 1/2"H	$448

e5 SIDE SURFACE SUPPORT CHANNELS, MODESTY PANELS & PRIVACY SCREENS

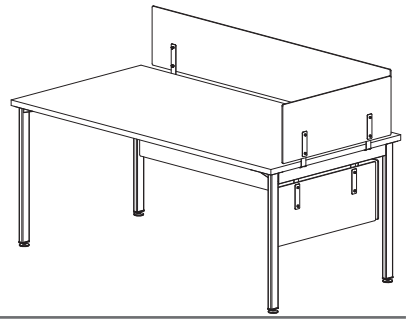

SIDE SURFACE SUPPORT CHANNELS / WIRE MANAGEMENT

Model No.	Description	List Price
EZWC17	For 24"D Surfaces	$86
EZWC23	For 30"D Surfaces	$89
EZWC29	For 36"D Surfaces	$91

SIDE SURFACE MODESTY PANELS – ACRYLIC*

Model No.	Description	Dimensions	List Price
EZMAP16	For 24"D Surfaces	16"W x 3/16"D x 12 1/2"H	$260
EZMAP22	For 30"D Surfaces	22"W x 3/16"D x 12 1/2"H	$312
EZMAP28	For 36"D Surfaces	28"W x 3/16"D x 12 1/2"H	$323

* Side Surface Support Channel required for Modesty Panel installation.

SIDE SURFACE MODESTY PANELS – LAMINATE*

Model No.	Description	Dimensions	List Price
EZMLP16	For 24"D Surfaces	15 3/4"W x 1/2"D x 11 7/8"H	$62
EZMLP22	For 30"D Surfaces	21 3/4"W x 1/2"D x 11 7/8"H	$68
EZMLP28	For 36"D Surfaces	27 3/4"W x 1/2"D x 11 7/8"H	$72

* Side Surface Support Channel required for Modesty Panel installation.

SIDE SURFACE ACRYLIC PRIVACY SCREENS – ABOVE SURFACE (MOUNTS UNDERNEATH SURFACE)

Model No.	Description	Dimensions	List Price
EZAPP18	For 24"D Surfaces	18"W x 3/16"D x 12 1/2"H	$271
EZAPP24	For 30"D Surfaces	24"W x 3/16"D x 12 1/2"H	$292
EZAPP30	For 36"D Surfaces	30"W x 3/16"D x 12 1/2"H	$312

e5 ABOVE SURFACE FABRIC TACK PANELS

- Space Divider (privacy) and functional tack board in one.
- Overall panel height with bracket is 12 1/2" or 18 1/2". Brackets/hardware included. Painted steel brackets are available in White, Silver or Black. Specify paint finish color.
- Select fabric from Guilford of Maine panel fabric. Fabrics listed in Mayline Corporate Color Program are “standard”, any other Guilford panel fabric is considered “premier”.
- Tack Panel mounts on top of surface (tables, beltways, cabinets, etc.).
- Tack Board is framed in brushed aluminum.
- To specify, choose panel that is 6" shorter than worksurface.

Model No.	Description	Dimensions	List Price	(+P) List Price
EZTP2412	e5 Above Surface Fabric Tack Panels 12"H	24"W x 12"H	$365	$449
EZTP3012	e5 Above Surface Fabric Tack Panels 12"H	30"W x 12"H	$396	$479
EZTP3612	e5 Above Surface Fabric Tack Panels 12"H	36"W x 12"H	$427	$509
EZTP4212	e5 Above Surface Fabric Tack Panels 12"H	42"W x 12"H	$480	$559
EZTP4812	e5 Above Surface Fabric Tack Panels 12"H	48"W x 12"H	$511	$589
EZTP5412	e5 Above Surface Fabric Tack Panels 12"H	54"W x 12"H	$532	$609
EZTP6012	e5 Above Surface Fabric Tack Panels 12"H	60"W x 12"H	$563	$639
EZTP6612	e5 Above Surface Fabric Tack Panels 12"H	66"W x 12"H	$605	$679
EZTP2418	e5 Above Surface Fabric Tack Panels 18"H	24"W x 18"H	$469	$549
EZTP3018	e5 Above Surface Fabric Tack Panels 18"H	30"W x 18"H	$501	$579
EZTP3618	e5 Above Surface Fabric Tack Panels 18"H	36"W x 18"H	$532	$609
EZTP4218	e5 Above Surface Fabric Tack Panels 18"H	42"W x 18"H	$584	$659
EZTP4818	e5 Above Surface Fabric Tack Panels 18"H	48"W x 18"H	$616	$689
EZTP5418	e5 Above Surface Fabric Tack Panels 18"H	54"W x 18"H	$636	$709
EZTP6018	e5 Above Surface Fabric Tack Panels 18"H	60"W x 18"H	$668	$739
EZTP6618	e5 Above Surface Fabric Tack Panels 18"H	66"W x 18"H	$710	$779

NOTE: Guilford of Maine panel fabric. Upholstery fabric not warranted. List price reflects Guilford of Maine standard panel fabric. If an alternative or premier line of fabric is selected, add suffix “P” to Model No. and use the (+P) column price above. Contact Customer Service for upcharge and leadtime.

e5 LAYERED HEIGHT STORAGE CABINETS

GSA Intertek

A variety of widths and internal configurations are available in the choice of 6 standard Thermally Fused Laminates.

- Storage cabinets are made of 1" TFL tops, bottoms and shelves and 3/4" TFL sides and finished backs.
- Cabinets are supported by 1 7/8" high painted steel legs with adjustable glides.
- Cabinets ship assembled; pulls and legs are field installed.
- Lateral drawers available in 30" and 36" wide cabinets only with lock as standard.
- Full extension drawer steel slides are standard. Hanging file frames are included.
- Lateral Drawers have a 90# maximum weight load capacity per drawer.
- Legs available in White, Black or Silver.
- Sliding doors are made of 1/4" TFL.
- One drawer pull per drawer, in silver only.
- Matching PVC edgebanding.
- Total cabinet load capacity 300#.

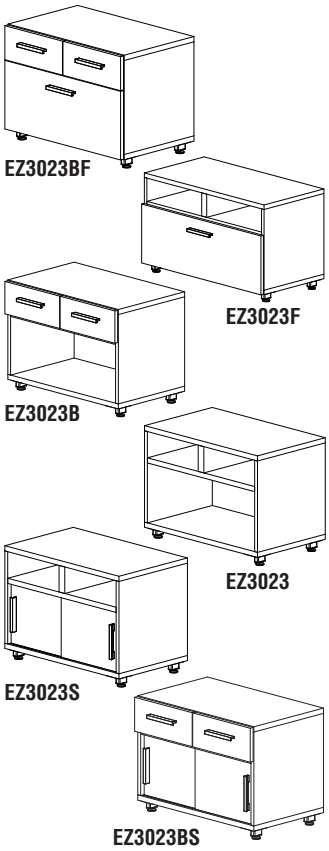

Model No.	Upper Level	Lower Level	Dimensions	Wt.	List Price
EZ3023BF	2 Box Drawers	1 Lateral File Drawer	30"W x 18"D x 21 3/4"H	136#	$1238
EZ3623BF	2 Box Drawers	1 Lateral File Drawer	36"W x 18"D x 21 3/4"H	144#	$1354
EZ3023F	Divided Opening	1 Lateral File Drawer	30"W x 18"D x 21 3/4"H	124#	$996
EZ3623F	Divided Opening	1 Lateral File Drawer	36"W x 18"D x 21 3/4"H	136#	$1081
EZ3023B	2 Box Drawers	Open	30"W x 18"D x 21 3/4"H	84#	$945
EZ3623B	2 Box Drawers	Open	36"W x 18"D x 21 3/4"H	88#	$1023
EZ4223B	2 Box Drawers	Open	42"W x 18"D x 21 3/4"H	92#	$1049
EZ4823B	2 Box Drawers	Open	48"W x 18"D x 21 3/4"H	96#	$1075
EZ3023	Divided Open	Open	30"W x 18"D x 21 3/4"H	53#	$686
EZ3623	Divided Open	Open	36"W x 18"D x 21 3/4"H	55#	$763
EZ4223	Divided Open	Open	42"W x 18"D x 21 3/4"H	57#	$780
EZ4823	Divided Open	Open	48"W x 18"D x 21 3/4"H	59#	$806
EZ3023S	Divided Open	Sliding Laminate Doors	30"W x 18"D x 21 3/4"H	58#	$840
EZ3623S	Divided Open	Sliding Laminate Doors	36"W x 18"D x 21 3/4"H	60#	$923
EZ4223S	Divided Open	Sliding Laminate Doors	42"W x 18"D x 21 3/4"H	62#	$945
EZ4823S	Divided Open	Sliding Laminate Doors	48"W x 18"D x 21 3/4"H	64#	$971
EZ3023BS	2 Box Drawers	Sliding Laminate Doors	30"W x 18"D x 21 3/4"H	87#	$1096
EZ3623BS	2 Box Drawers	Sliding Laminate Doors	36"W x 18"D x 21 3/4"H	91#	$1170
EZ4223BS	2 Box Drawers	Sliding Laminate Doors	42"W x 18"D x 21 3/4"H	95#	$1197
EZ4823BS	2 Box Drawers	Sliding Laminate Doors	48"W x 18"D x 21 3/4"H	99#	$1223

BELTWAY MOUNTING KIT FOR BETWEEN LOWER STORAGE CABINETS

- Utilize existing components into a new configuration and finish the look with a beltway mounting kit.
- Includes mounting brackets and cladding pieces (order 1 kit per beltway).

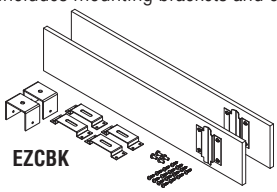

Model No.	Description	List Price
EZCBK	One size fits all	$312

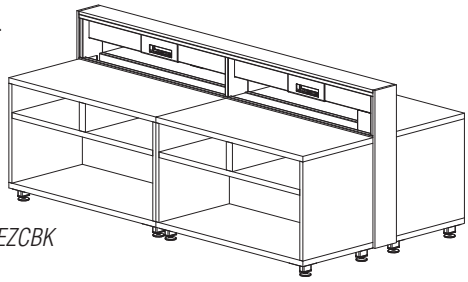

Lower cabinets shown utilizing EZCBK and EZTB60PS.

OPTIONAL FABRIC SEAT CUSHIONS

- Seat cushions are attached to cabinets with Velcro strips (included).

For fabric choices on cushions refer to online upholstery fabric card (#FABCARD) for current standard options. Prices as quoted below. For graded-in fabrics, visit www.themomgroup.com/mfg/208 for a complete textile offering and samples. COM Fabric Program available. See separate order form at the back of the price book for guidelines.

		FABRIC GRADE SELECTIONS LIST PRICES									
Model No.	**Dimensions**	**2**	**F3**	**F4**	**F5**	**F6**	**F7**	**F8**	**F9**	**F10**	**COM(FX)**
EZSC15	15 1/2"W x 23"D x 2"H (Mobile Ped Cushion)	$277	$305	$319	$333	$374	$402	$458	$500	$540	$305
EZSC24	23"W x 17"D x 2"H	$277	$305	$319	$333	$374	$402	$458	$500	$540	$305
EZSC30	29"W x 17"D x 2"H	$297	$326	$341	$356	$401	$431	$490	$535	$579	$326
EZSC36	35"W x 17"D x 2"H	$326	$359	$375	$392	$441	$474	$538	$587	$636	$359
EZSC42	41"W x 17"D x 2"H	$357	$393	$411	$428	$482	$517	$589	$644	$697	$393
EZSC48	47"W x 17"D x 2"H	$377	$415	$434	$452	$509	$547	$622	$678	$735	$415

e5 SURFACE HEIGHT STORAGE CABINETS

GSA Intertek

Cabinets are available in a variety of widths and internal configurations in a choice of 6 Thermally Fused Laminates.

- Storage cabinets are made of 1 1/8" TFL tops, bottoms and shelves and 3/4" TFL sides and finished backs.
- Cabinets are supported by 1 7/8" high painted steel legs with adjustable glides.
- Cabinets ship assembled; pulls and legs are field installed.
- Legs available in White, Black or Silver.
- Surface Height Lateral Drawer Cabinets are available in (2) drawer or open top and (1) drawer bottom in 36" widths only.
- Lateral Drawers feature anti-tip drawer interlock system that allows only one drawer to open at a time.
- All files ship with keyed alike locks as standard; field installed replacement cores and keys can be ordered at an additional cost.
- Counter weight back included to meet ANSI/BIFMA stability requirements.
- Full extension drawer steel slides are standard. Hanging file frames are included.
- Single drawer pull per drawer and hinged door handles in silver only.
- 72" wide cabinets with hinged doors or open shelving consist of (2) 36"W cabinets with a common 1 1/8" top.
- Matching PVC edgebanding.
- Lateral Drawers have a 90# maximum weight load capacity per drawer.

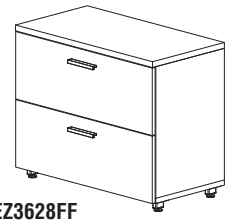

EZ3628FF

EZ3628F

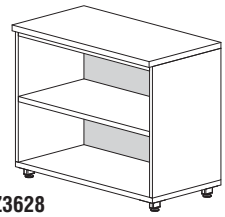

EZ3628

Model No.	Upper Level	Lower Level	Dimensions	Wt.	List Price
EZ3628FF	Lateral File Drawer	Lateral File Drawer	36"W x 18"D x 29 1/2"H	240#	$1667
EZ3628F	Open	Lateral File Drawer	36"W x 18"D x 29 1/2"H	205#	$1336
EZ3628	Open	Open w/o Doors (Bookcase)	36"W x 18"D x 29 1/2"H	85#	$1053
EZ3628L	Laminate Hinged Doors	Laminate Hinged Doors	36"W x 18"D x 29 1/2"H	105#	$1237
Surface Height Storage Cabinets (Two 36" Open Cabinets w/Common 1 1/8" Top)					
EZ7228	–	–	72"W x 18"D x 29 1/2"H	173#	$1891
Surface Height Storage Cabinets – Hinged Laminate Doors (Two 36" Cabinets w/Common 1 1/8" Top)					
EZ7228L (Includes 1 Fixed Horizontal Shelf)			72"W x 18"D x 29 1/2"H	197#	$2300

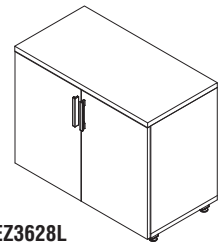

EZ3628L

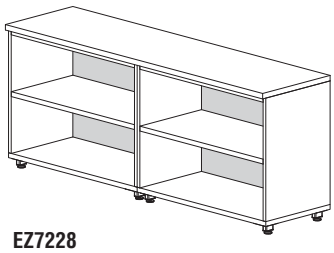

EZ7228

EZ7228L

e5 FREESTANDING STORAGE

- e5 Wardrobe Storage Towers come in 51"H and 62"H in the choice of 6 Thermally Fused Laminates.
- Wardrobes and Bookcases are made of 1" TFL top, bottom and shelves and 3/4" TFL sides with finished backs.
- Wardrobes and Bookcases ship assembled. Legs, pulls and shelves are field installed.
- Wardrobes and Bookcases are supported by 1 7/8" high painted steel legs with adjustable glides, available in White, Silver or Black.

WARDROBE STORAGE TOWERS

- Wardrobes include hang rod and adjustable shelves (2 shelves for 51" high and 3 shelves for 62" high) with Silver pulls on drawers and doors.
- Each wardrobe includes a BBF Pedestal with gang lock and full extension slides. Select orientation; drawers available on either left or right side.

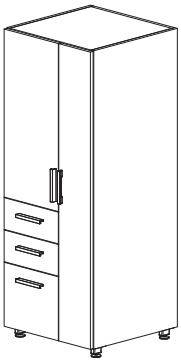

EZWT62

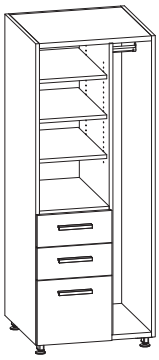

Interior view.

Model No.	Description	Dimensions	Wt.	List Price
EZWT51	2-Shelf	23 1/2"W x 23 1/2"D x 51"H	231#	$2090
EZWT62	3-Shelf	23 1/2"W x 23 1/2"D x 62"H	268#	$2159
EZWT51R	2-Shelf	23 1/2"W x 23 1/2"D x 51"H	231#	$2000
EZWT62R	3-Shelf	23 1/2"W x 23 1/2"D x 62"H	268#	$2066

EZWT62R

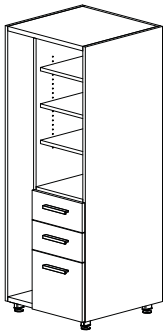

Interior view.

COMPACT WARDROBE TOWERS

- Wardrobes include wardrobe bar and adjustable shelf (right side) and 3 adjustable shelves (left side).
- Right-swing door only.

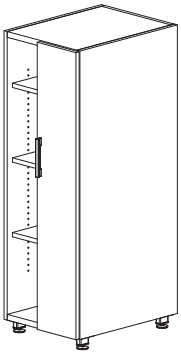

EZWTC51

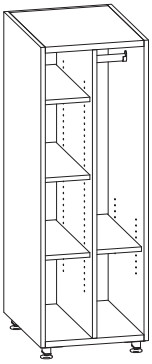

Interior view.

Model No.	Description	Dimensions	Wt.	List Price
EZWTC51	1/2 Door Over Wardrobe, 1/2 Open Shelving	15"W x 23 1/2"D x 51"H	150#	$1484
EZWTC62	1/2 Door Over Wardrobe, 1/2 Open Shelving	15"W x 23 1/2"D x 62"H	175#	$1543

BOOKCASES

- Bookcases are 36" wide in 3 heights with adjustable (on 1" increments) shelves except for fixed base shelf.

Model No.	Description	Dimensions	Wt.	List Price
EZBC3629	2-Shelf	36"W x 15"D x 29 1/2"H	75#	$712
EZBC3651	4-Shelf	36"W x 15"D x 51"H	105#	$1042
EZBC3662	5-Shelf	36"W x 15"D x 62"H	116#	$1115

EZBC3629

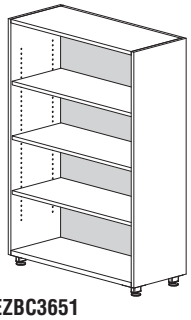

EZBC3651

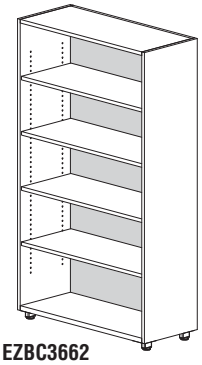

EZBC3662

e5 FREESTANDING STORAGE

BOOKCASE TOWERS (PEDESTAL OPTIONS)

- Select a ped size/style *(Non-handed).*

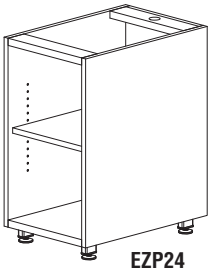

EZP24

Model No.	Description	Dimensions	Wt.	List Price
EZP24	24" Deep Open/Open Ped, no top	15 1/2"W x 24"D x 28 1/2"H	75#	$588
EZP30	30" Deep Open/Open Ped, no top	15 1/2"W x 30"D x 28 1/2"H	80#	$674
EZP36	36" Deep Open/Open Ped, no top	15 1/2"W x 36"D x 28 1/2"H	85#	$732

NOTE: Open pedestal with 1 shelf and wire cutout.

EZP24BBF	24" Deep BBF, no top	15 1/2"W x 24"D x 28 1/2"H	96#	$877
EZP30BBF	30" Deep BBF, no top	15 1/2"W x 24"D x 28 1/2"H	105#	$931
EZP36BBF	36" Deep BBF, no top	15 1/2"W x 24"D x 28 1/2"H	115#	$1001

EZP24FF	24" Deep FF, no top	15 1/2"W x 24"D x 28 1/2"H	82#	$831
EZP30FF	30" Deep FF, no top	15 1/2"W x 24"D x 28 1/2"H	92#	$885
EZP36FF	36" Deep FF, no top	15 1/2"W x 24"D x 28 1/2"H	102#	$929

NOTE: Open pedestal with 1 shelf and wire cutout.

BOOKCASE TOWERS (BOOKCASE ADDER)

- Select a bookcase size/height *(Attach bookcase to pedestal at install – hardware included in ped).*
- Adjustable shelves in 1" increments *(2 shelves on 62", 1 on 52").*
- Available in either 51" or 62" overall height when mounted on pedestal.
- Shelf has 13 positions.

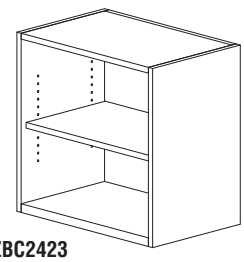

EZBC2423

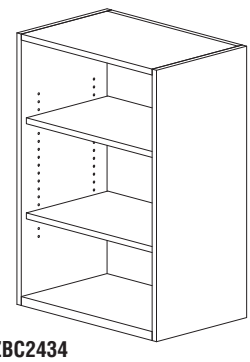

EZBC2434

Model No.	Description	Dimensions	Wt.	List Price
EZBC2423	2-Shelf Bookcase for above 24"D Ped	24"W x 15 1/2"D x 23 1/4"H	75#	$521
EZBC3023	2-Shelf Bookcase for above 30"D Ped	30"W x 15 1/2"D x 23 1/4"H	80#	$542
EZBC3623	2-Shelf Bookcase for above 36"D Ped	36"W x 15 1/2"D x 23 1/4"H	85#	$553

NOTE: Not for use as a stand-alone bookcase.
51" overall height when stacked on pedestal.

EZBC2434	3-Shelf Bookcase for above 24"D Ped	24"W x 15 1/2"D x 34 1/4"H	95#	$653
EZBC3034	3-Shelf Bookcase for above 30"D Ped	30"W x 15 1/2"D x 34 1/4"H	105#	$705
EZBC3634	3-Shelf Bookcase for above 36"D Ped	36"W x 15 1/2"D x 34 1/4"H	115#	$803

NOTE: 62" overall height when stacked on pedestal.

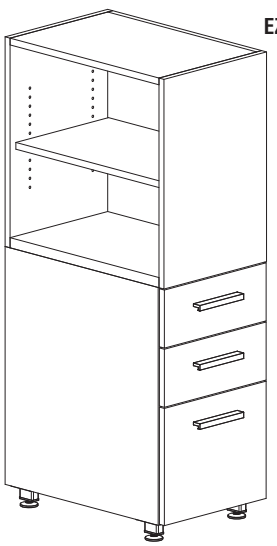

EZBC2423

EZP24BBF

e5 MOBILE PEDESTALS

GSA Intertek

Use a Mobile Pedestal for storage and as convenient guest seating.

- Available in the 6 TFL colors with matching edge banding.
- Pedestals are shipped assembled; pulls and casters are field installed.
- Drawer pull is available in Silver only.
- Supports letter and legal files.
- Hanging file frames are included for all file drawers.
- Drawer configuration is one box and one file drawer.
- Black casters (2 locking; 2 non-locking).
- Full extension slides.
- Mobile Pedestals are made of 1" Thermally Fused Laminate tops, bottoms, and shelves; and 3/4" TFL sides and finished backs.
- Pedestals come with one silver lock, keyed alike. Additional keys and cores are available for additional fee.

MOBILE PEDESTAL

EZPM24BF

Model No.	Description	Dimensions	Wt.	List Price
EZPM24BF	Mobile Pedestal	15 1/2"W x 24"D x 23"H	82#	$620

OPTIONAL FABRIC SEAT CUSHIONS

- Optional Seat Cushions are attached to cabinets with velcro strips that are included with the cushion.

For fabric choices on cushions refer to online upholstery fabric card (#FABCARD) for current standard options. Prices as quoted below. For graded-in fabrics, visit www.themomgroup.com/mfg/208 for a complete textile offering and samples. COM Fabric Program available. See separate order form at the back of the price book for guidelines.

Cushion shown with Mobile Pedestal.

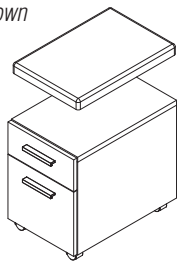

* Fabric options described above. Specify fabric.

		FABRIC GRADE SELECTIONS LIST PRICES									
Model No.	**Dimensions**	**2**	**F3**	**F4**	**F5**	**F6**	**F7**	**F8**	**F9**	**F10**	**COM(FX)**
EZSC15	15 1/2"W x 23"D x 2"H (Mobile Ped Cushion)	$277	$305	$319	$333	$374	$402	$458	$500	$540	$305

e5 REPLACEMENT LOCK CORES

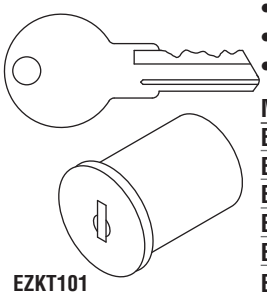

EZKT101

- Allows pedestals and storage cabinets to be keyed uniquely.
- Master key available in brass only.
- Field replacement only.
- Replacement cores and keys in satin nickel finish.
- Must purchase a core removal tool to change lock cores.
- Additional replacement core with keys available upon request.

Model No.	Description	List Price
EZKT101	Replacement Core with Keys	$22
EZKT102	Replacement Core with Keys	$22
EZKT103	Replacement Core with Keys	$22
EZKT104	Replacement Core with Keys	$22
EZMK	Master Key	$22
EZCRT	Core Removal Tool	$22

e5 OVERHEAD STORAGE CABINETS

GSA Intertek

- Overhead Storage Cabinets are made of 1" TFL top and bottom shelves, and 3/4" TFL sides and finished backs. Available in one of 6 colors.
- Overhead Storage Cabinets shipped assembled with doors attached.
- Overhead Cabinet options include open fronts, hinged frosted glass doors, hinged laminate doors, or sliding acrylic/marker board doors.
- 42", 48" and 72"W cabinets have a 12"W center opening without doors; 78"W cabinets have an 18"W center opening without doors.
- Finger pull bottoms on all hinged doors. Cut-out handle on acrylic sliding doors.
- Overhead Cabinets can be wall mounted (cabinets 42" and wider include cleats), mounted on Technology Beltway/Wall (cabinets 36"W and narrower include beltway brackets), or on corner supports.
- Tack Panels and Dry Erase boards (see Accessories page 45) available to fit on the reverse size of the 24", 30" and 36" units in open plan settings.
- 24",30" and 36" cabinets include pilot holes / brackets for mounting to beltways and tech walls.
- Cabinets 42"and above include cleats for wall mounting.

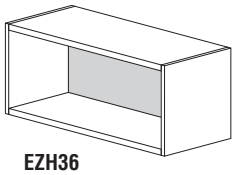
EZH36

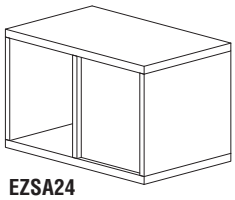
EZSA24

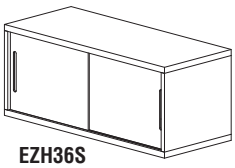
EZH36S

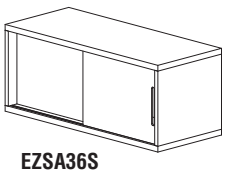
EZSA36S

Model No.	Description	Dimensions	Wt.	List Price
EZH24	Open/No Doors	24"W x 15"D x 15"H	34#	$391
EZH30	Open/No Doors	30"W x 15"D x 15"H	47#	$426
EZH36	Open/No Doors	36"W x 15"D x 15"H	78#	$464
EZSA24	Open/No Doors/2 Sided	24"W x 15"D x 15"H	47#	$442
EZSA30	Open/No Doors/2 Sided	30"W x 15"D x 15"H	50#	$461
EZSA36	Open/No Doors/2 Sided	36"W x 15"D x 15"H	81#	$530
EZH24S	Open/2 Sliding/Beltway Mount Kit	24"W x 15"D x 15"H	49#	$521
EZH30S	Open/2 Sliding/Beltway Mount Kit	30"W x 15"D x 15"H	52#	$626
EZH36S	Open/2 Sliding/Beltway Mount Kit	36"W x 15"D x 15"H	83#	$730
EZSA24S	Dual-Sided/1 Sliding on each side	24"W x 15"D x 15"H	50#	$521
EZSA30S	Dual-Sided/1 Sliding on each side	30"W x 15"D x 15"H	53#	$678
EZSA36S	Dual-Sided/1 Sliding on each side	36"W x 15"D x 15"H	84#	$783
EZH30F	2 Frosted Glass Hinged Doors	30"W x 15 3/4"D x 15"H	55#	$750
EZH36F	2 Frosted Glass Hinged Doors	36"W x 15 3/4"D x 15"H	90#	$791
EZH42F	2 Frosted Glass Hinged Doors	42"W x 15 3/4"D x 15"H	122#	$840
EZH48F	2 Frosted Glass Hinged Doors	48"W x 15 3/4"D x 15"H	142#	$855
EZH60F	4 Frosted Glass Hinged Doors	60"W x 15 3/4"D x 15"H	62#	$1343
EZH72F	4 Frosted Glass Hinged Doors	72"W x 15 3/4"D x 15"H	108#	$1392
EZH78F	4 Frosted Glass Hinged Doors	78"W x 15 3/4"D x 15"H	126#	$1412
EZH30L	2 Laminate Hinged Doors	30"W x 15 3/4"D x 15"H	60#	$573
EZH36L	2 Laminate Hinged Doors	36"W x 15 3/4"D x 15"H	102#	$632
EZH42L	2 Laminate Hinged Doors	42"W x 15 3/4"D x 15"H	134#	$676
EZH48L	2 Laminate Hinged Doors	48"W x 15 3/4"D x 15"H	54#	$691
EZH60L	4 Laminate Hinged Doors	60"W x 15 3/4"D x 15"H	70#	$1001
EZH72L	4 Laminate Hinged Doors	72"W x 15 3/4"D x 15"H	114#	$1045
EZH78L	4 Laminate Hinged Doors	78"W x 15 3/4"D x 15"H	134#	$1066

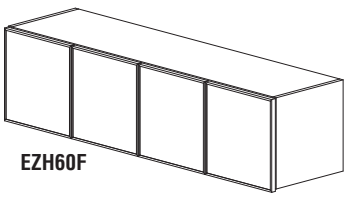
EZH60F

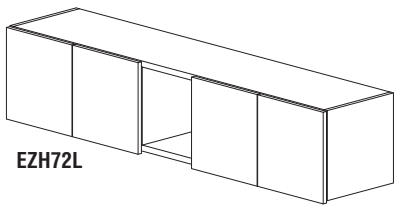
EZH72L

e5 OVERHEAD STORAGE CABINETS

OVERHEAD CABINET SUPPORT

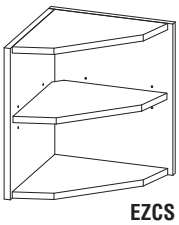

EZCS

Model No.	Description	Dimensions	Wt.	List Price
EZCS	Corner Support for Overhead Cabinet	15"W x 15"D x 18"H	18#	$314
EZSM18H	Support Modules/Horizontal	15"W x 15"D x 18"H	21#	$437
EZSM18V	Support Modules/Vertical	15"W x 15"D x 18"H	21#	$437

* Select from 1 of 6 laminates.

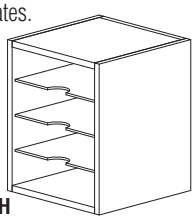

EZSM18H

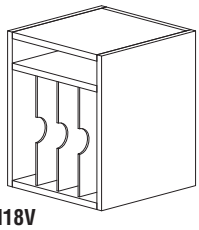

EZSM18V

OVERHEAD CENTER ACCESS MODULE

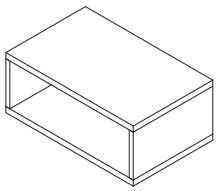

EZCA24

Model No.	Description	Dimensions	Wt.	List Price
EZCA24	Passthrough used w/42"H Peninsula Table	24"W x 15"D x 9"H	8#	$285

* Select from 1 of 6 laminates.

e5 POWER AND DATA MANAGEMENT

GSA

Management of power and data is where e5 excels. The patent pending Technology Beltways and Walls deliver seated access to power and data throughout any configuration. Power is routed from the source to worksurfaces via the Technology Beltway or Wall.

How to Specify: Please refer to pre-configured Typicals section for examples of e5 workstations.
(Spaceplanning is available to assist in these decisions.)

1. **Beltways or Walls:** Based on your configuration, choose either Technology Beltways or Technology Walls. Both provide equal power/data connectivity, but work with different types of worksurfaces.
2. **Single- or 4-Circuit Power:** For configurations with only one (1) Beltway or Wall, you have the option of selecting single-circuit (plug-in) or 4-circuit (hardwired) power. Two (2) or more Beltways or Walls in a configuration require 4-circuit power for adequate power capacity. *(See specifications below for power system details.)*
3. **Starters:** Choose the Beltway or Wall 'Starter' unit based on your power needs and size of work surfaces. Starters include Beltway or Wall, infeed cable (72"L plug-in for single-circuit or 144"L hardwired for 4-circuit), dual-sided power blocks with 4-outlets per side, and data plate cut-outs. *(See charts below for specifics.)* If selecting a plug-in (single circuit) starter, adder sections cannot be joined to it.
4. **Adders:** Choose the Beltway or Wall 'Adder' unit(s) based on your overall configuration. Adders include Beltway or Wall, dual-sided power blocks with 4-outlets per side, 34"L connecting cable, and data plate cut-outs. *(See charts below for specifics.)*

POWER SYSTEM SPECIFICATIONS

- Power kits can be reconfigured at any time with no tools required.
- Power kits are UL Recognized and CSA Certified.
- Single-Circuit kits are rated for 20 amps. 4-Circuit, 8-Wire kits are rated for 80 amps.
- It is the customer's responsibility to ensure that the use of electrical systems, including the number of receptacles on a given circuit and connection to the building's power source, be in compliance with all electrical codes. Refer to the chart below for typical power usage by common office equipment.
- City of Chicago solution available. Hard wiring by an electrician required. Contact Space Planning for alternative part numbers.

TYPICAL POWER USAGE BY COMMON OFFICE EQUIPMENT

	AMPS
Computers	
Desktop	3-5
Laptop	3
Monitors	
13"	2
17"	3
21"	3
Copiers	
Desktop	15
Console	20
Copier/Duplicator	30
Printers	
Inkjet	0.5
Laser or LED	8
Group Laser or LED	15
FAX Machines	
Inkjet/Thermal	0.75
Plain Paper	6
Task Lights	
36" T8 Fluorescent	0.2/Bulb
48" T8 Fluorescent	0.3/Bulb

NOTE: Plug-in infeed is single circuit.

TECHNOLOGY BELTWAY

- Technology Beltways include steel framework *(specify paint color)*, laminate cladding on tops and sides *(specify TFL, see page 8)*, all necessary hardware for surface connections, and power elements. *(See above.)*
- Laminate cladding is attached to the tops and sides using a patent-pending connector bracket that requires no tools.
- Sits above worksurface.
- Adds 7 3/4" to desk height.

[STARTER PLUG-IN]

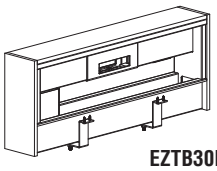

EZTB30PS

[STARTER HARDWIRE]

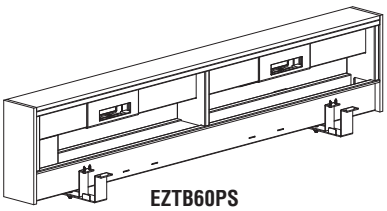

EZTB60PS

Model No.	Dimensions	List Price
Beltway Single-Circuit Starter Kits with One 72" Plug-In Infeed Cable, One Dual-Sided Power Block & Two Data Plate Cut-outs		
EZTB24PS	24"W x 5 1/4"D x 12 3/8"H	$1265
EZTB30PS	30"W x 5 1/4"D x 12 3/8"H	$1315
EZTB36PS	36"W x 5 1/4"D x 12 3/8"H	$1351
EZTB42PS	42"W x 5 1/4"D x 12 3/8"H	$1376
Beltway Single-Circuit Starter Kits with One 72" Plug-In Infeed Cable, Two Dual-Sided Power Blocks & Four Data Plate Cut-outs		
EZTB48PS	48"W x 5 1/4"D x 12 3/8"H	$1609
EZTB60PS	60"W x 5 1/4"D x 12 3/8"H	$1698
EZTB72PS	72"W x 5 1/4"D x 12 3/8"H	$1793
Beltway Four-Circuit Starter Kits with One 144" Hardwire Infeed Cable, One Dual-Sided Power Block & Two Data Plate Cut-outs		
EZTB24HS	24"W x 5 1/4"D x 12 3/8"H	$1293
EZTB30HS	30"W x 5 1/4"D x 12 3/8"H	$1342
EZTB36HS	36"W x 5 1/4"D x 12 3/8"H	$1378
EZTB42HS	42"W x 5 1/4"D x 12 3/8"H	$1403
Beltway Four-Circuit Starter Kits with One 144" Hardwire Infeed Cable, Two Dual-Sided Power Blocks & Four Data Plate Cut-outs		
EZTB48HS	48"W x 5 1/4"D x 12 3/8"H	$1636
EZTB60HS	60"W x 5 1/4"D x 12 3/8"H	$1725
EZTB72HS	72"W x 5 1/4"D x 12 3/8"H	$1820

[ADDERS]

Beltway Four-Circuit Adder Kits with One Dual-Sided Power Block, Two Data Plate Cut-outs & One 34" Connecting Cable		
EZTB24HA	24"W x 5 1/4"D x 12 3/8"H	$1118
EZTB30HA	30"W x 5 1/4"D x 12 3/8"H	$1176
EZTB36HA	36"W x 5 1/4"D x 12 3/8"H	$1222
EZTB42HA	42"W x 5 1/4"D x 12 3/8"H	$1256
Beltway Four-Circuit Adder Kits with Two Dual-Sided Power Blocks, Four Data Plate Cut-outs & One 34" Connecting Cable		
EZTB48HA	48"W x 5 1/4"D x 12 3/8"H	$1462
EZTB60HA	60"W x 5 1/4"D x 12 3/8"H	$1559
EZTB72HA	72"W x 5 1/4"D x 12 3/8"H	$1664

TECHNOLOGY WALL

- Technology Walls include steel framework *(specify paint color)*, laminate cladding on tops, sides, and front panels *(specify TFL, see page 4)*, all necessary hardware for surface connections, and power elements. *(see above)*
- Technology Wall is NOT freestanding; cantilevered worksurfaces are required on BOTH sides of Wall for stability *(or use optional foot kit shown below).*
- Laminate cladding is attached to the tops and sides using a patent-pending connector bracket that requires no tools.
- Laminate front panels are attached to steel framework using heavy-duty Velcro. They are easily removed to hide or access cables between panels.

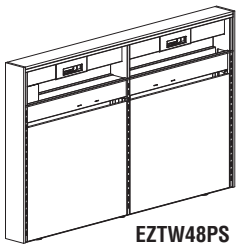

EZTW48PS

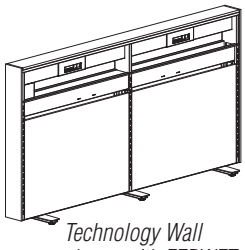

Technology Wall shown with EZPWFT.

Model No.	Dimensions	List Price
Technology Wall Single-Circuit Starter Kits with One 72" Plug-In Infeed Cable, Two Dual-Sided Power Blocks & Four Data Plate Cut-outs		
EZTW48PS	48"W x 5 1/4"D x 36 3/4"H	$2449
EZTW60PS	60"W x 5 1/4"D x 36 3/4"H	$2631
EZTW72PS	72"W x 5 1/4"D x 36 3/4"H	$2822
Technology Wall Four-Circuit Starter Kits with One 144" Hardwire Infeed Cable, Two Dual-Sided Power Blocks & Four Data Plate Cut-outs		
EZTW48HS	48"W x 5 1/4"D x 36 3/4"H	$2477
EZTW60HS	60"W x 5 1/4"D x 36 3/4"H	$2658
EZTW72HS	72"W x 5 1/4"D x 36 3/4"H	$2849
Technology Wall Four-Circuit Adder Kits with Two Dual-Sided Power Blocks, Four Data Plate Cut-outs & One 34" Connecting Cable		
EZTW48HA	48"W x 5 1/4"D x 36 3/4"H	$2302
EZTW60HA	60"W x 5 1/4"D x 36 3/4"H	$2492
EZTW72HA	72"W x 5 1/4"D x 36 3/4"H	$2692

OPTIONAL TECHNOLOGY WALL SHELF

- Wall Shelf: 8 1/2" deep by length of wall *(select length below).*
- Maximum weight holding capacity is 50# *(evenly distributed).*
- Kit consists of 3 bracket supports and screws necessary to attach to technology wall.

Model No.	Dimensions	List Price
EZPWSK48	48"W x 8 1/2"D x 1 1/8"H	$333
EZPWSK60	60"W x 8 1/2"D x 1 1/8"H	$365
EZPWSK72	72"W x 8 1/2"D x 1 1/8"H	$407

OPTIONAL TECHNOLOGY WALL FILLER KIT

- Kit consists of 2 filler pieces and velcro for attachment.
- Ideal for use with freestanding technology wall.
- Each kit fills in one side of the wall. Freestanding walls require 2 kits; one-sided walls require 1 kit.
- Select filler kit width based on technology wall size.

Model No.	Dimensions	List Price
EZPWFP48	22 3/4"W x 4 1/2"H	$135
EZPWFP60	28 3/4"W x 4 1/2"H	$145
EZPWFP72	34 3/4"W x 4 1/2"H	$156

OPTIONAL TECHNOLOGY WALL FOOT KIT

- Replace existing technology wall levelers and install feet (3 per wall section), hardware included.
- Available in White, Silver or Black finish.
- Overhead Storage Cabinets **cannot** be used on freestanding wall.
- Standard with 3 leveling glides per foot.
- To be used for freestanding or single-sided applications.

Model No.	Description	Dimensions	List Price
EZPWFT	Set of 3 feet.	15"L x 3"W x 1 1/2"H	$312

CONNECTING CABLE UNDER STORAGE UNITS

- A Connecting Cable is required to connect multiple Technology Beltways and Walls when storage units are placed between stations. Universal length to work with nearly all configurations. *Refer to Typical #15 on page 9 for an example.*

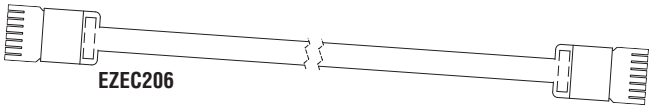

Model No.	Dimensions	List Price
EZEC206	206"L	$398

DATA TELECOM PLATE KITS

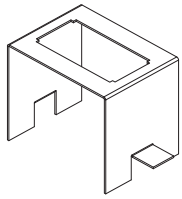

- Telecom Kits consist of one Telecom Plate and one Riser.
- Telecom Risers raise the data and phone Telecom Plates to a more convenient user connection height.
- Telecom Plates and Risers in Black only.
- Ten commonly used telecom connections are offered to complete the technology requirements of e5 workstations.
- Common Telecom Definitions:
  - **HDMI** (High Definition Multi-Media Interface) – Used to stream video on devices such as televisions or Blu-Ray DVD players.
  - **15 pin HD VGA F/F** (High Definition Video Graphics Array) – Used to stream video usually found on a laptop or projector.
  - **Mini Stereo Inline Audio Connection** (also called a 1/8" phone jack or headphone jack) – Runs audio from computers and mp3 players.
  - **USB** (Universal Serial Bus) – Connects computer peripherals such as mouse or keyboard to a computer.
- **Additional options are available upon request.**
- Data port openings are located in the bottom of the beltway trough.

Data telecom plate kits must be ordered separately. They are NOT included in the price of the Technology Beltway or Technology Wall.

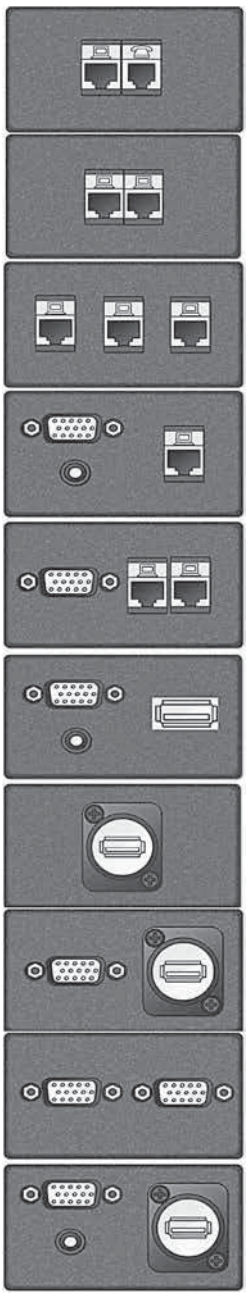

Model No.	Description	List Price
EZETP1K	Telecom Plate with RJ11Cat3 Phone and RJ45 CAT6 Data with Riser	$146
EZETP2K	Telecom Plate with 2 RJ45 Cat6 Data with Riser	$186
EZETP3K	Telecom Plate with 3 RJ45 Cat6 Data with Riser	$262
EZETP4K	Telecom Plate with RJ45 Cat6 Data, Mini Stereo Inline, and 15 Pin HD, VGA F/F with Riser	$294
EZETP5K	Telecom Plate with 2 RJ45 Cat6 Data and 15 Pin HD VGA F/F with Riser	$296
EZETP6K	Telecom Plate with 1 HDMI F/F, 1 Mini Stereo Inline and and 15 Pin, HD VGA F/F with Riser	$384
EZETP7K	Telecom Plate with USB Inline with Riser	$92
EZETP8K	Telecom Plate with USB Inline and 15 Pin HD VGA F/F with Riser	$224
EZETP9K	Telecom Plate with 2 - 15 Pin HD VGA F/F with Riser	$297
EZETP10K	Telecom Plate with USB Inline, 15 Pin HD VGA F/F, and Mini Stereo Inline with Riser	$276

HOW TO SPECIFY:
Choose desired Connector Model No. *(ie., EZETP1K)*

NO COLOR OPTIONS
Black only for Telecom Plate and Riser included in kit.

SURFACE-MOUNTED POWER CONFIGURATIONS (DAISY-CHAINED)

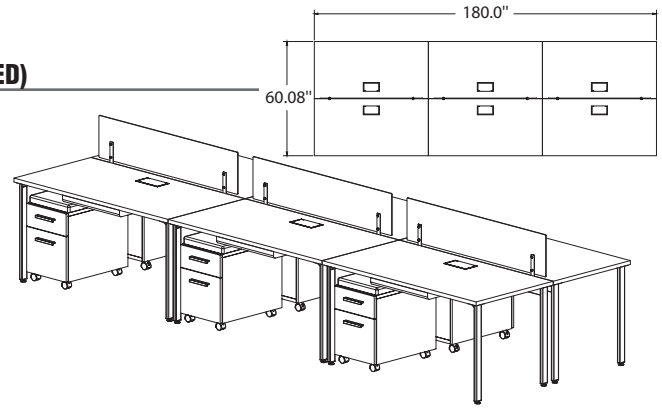

- Used on e5 worksurfaces without Technology Beltways or Walls. Ideal for single-sided configurations.
- UL Listed Components.
- Non-sequential connections.
- Convenient kits provide easy specifying. Black wrap covers conduit for improved appearance.
- See Power Infeed Option section for limitations of number of linked tables.
- It is the customer's responsibility to ensure that the use of electrical systems, including the number of receptacles on a given circuit and connection to a building power source, be in compliance with all electrical codes.
- Fieldcut cutouts required for some products.
- Data is not daisy-chainable

POWER INFEED OPTIONS

NOTE: Power Infeed Option must be added to the first table in a run.

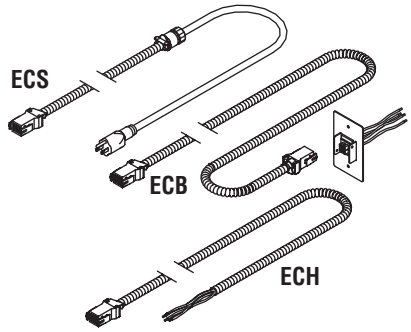

Model No.	Description	List Price
ECS	72" Corded Starter Limit 10 tables linked	$267
ECB	Quick Disconnect block & 72" cable with black wrap Limit 20 tables linked	$255
ECH	Hardwire Infeed, 72" w/black wrap Limit 20 tables linked	$173

UNDERSURFACE KITS

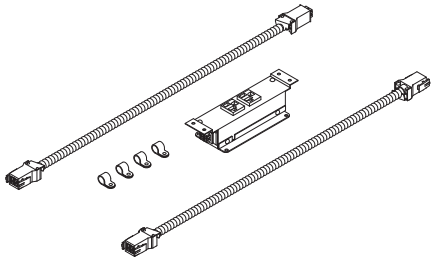

Model No.	Description	List Price
EC48UB	48" Table Kit – Block consisting of 2 power receptacles, 2 interconnecting table cables, 4 cable clamps	$408
EC60UB	60" Table Kit – Block consisting of 2 power receptacles, 2 interconnecting table cables, 4 cable clamps	$408
EC72UB	72" Table Kit – Block consisting of 2 power receptacles, 2 interconnecting table cables, 4 cable clamps	$408
EC48UDB	48" Table Kit – Block consisting of 2 power/2 data receptacles, 2 interconnecting cables, 4 cable clamps	$442
EC60UDB	60" Table Kit – Block consisting of 2 power/2 data receptacles, 2 interconnecting cables, 4 cable clamps	$442
EC72UDB	72" Table Kit – Block consisting of 2 power/2 data receptacles, 2 interconnecting cables, 4 cable clamps	$442

SURFACE MOUNT KITS

- Grommet holes are field installed – 5 1/4" x 3" cutout in worksurface required.
- Select Black or Silver grommet cover color.

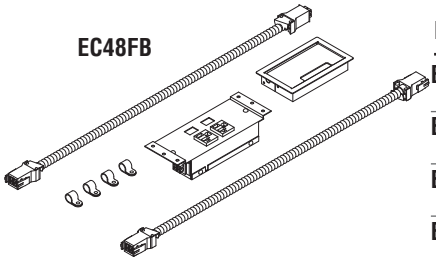

Model No.	Description	List Price
EC48FB	48" Table Kit – Black – Black Flush Grommet, base with 2 power receptacles, 2 interconnecting cables, 4 cable clamps	$542
EC48FS	48" Table Kit – Silver – Silver Flush Grommet, base with 2 power receptacles, 2 interconnecting cables, 4 cable clamps	$542
EC60FB	60" Table Kit – Black – Black Flush Grommet, base with 2 power receptacles, 2 interconnecting cables, 4 cable clamps	$542
EC60FDB	60" Table Kit – Block consisting of 2 power receptacles, 2 data receptacles, 2 interconnecting cables, 4 cable clamps	$571
EC60FDS	60" Table Kit – Silver – Silver Flush Grommet, base with 2 power receptacles, 2 interconnecting cables, 4 cable clamps	$571
EC72FDB	72" Table Kit – Black – Black Flush Grommet, base with 2 power receptacles, 2 interconnecting cables, 4 cable clamps	$571
EC72FDS	72" Table Kit – Block consisting of 2 power receptacles, 2 data receptacles, 2 interconnecting cables, 4 cable clamps	$571
EC72FS	72" Table Kit - Silver – Silver Flush Grommet, base with 2 power receptacles, 2 interconnecting cables, 4 cable clamps	$542

Accessories available in black or silver

OPTIONS

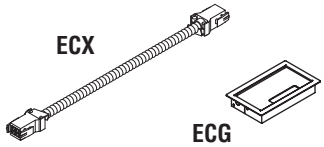

Model No.	Description	List Price
ECX	12" Extension Cable	$93
ECG	Rectangular Grommet Cover Only. Available in Black or Silver. (Automatically included in Surface Mount Kits.)	$99

SURFACE-MOUNTED POWER OPTIONS (INDIVIDUAL PLUG-IN) **Note:** Field cut and installed only.

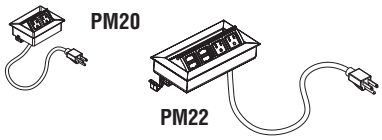

Model No.	Description	Wt.	List Price
PM20	Power Module w/2 Power Outlets (Black)	2#	$305
PM22	Power and Data Surface Module with 2 Power and 2 Data Outlets (Silver Only)	4#	$464

e5 TECHNOLOGY SUPPORT ACCESSORIES

e5 offers a variety of technology support options.

ELECTRICAL SOLUTIONS FOR PEDS & WARDROBES

Convert most any drawer into a powered solution. This customized power block utilizes key slots to attach to the drawer side. No need to cut into the worksurface.

- Unique cord feature allows you to conveniently pull the drawer open without cords becoming an obstacle.

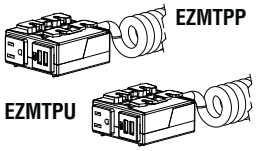

Model No.	Description	Wt.	List Price
EZMTPP	Power Solution for inside drawer (power/power)	2#	$149
EZMTPU	Power/USB Charging Solution for inside drawer (power/2 USB)	2#	$169

PC SUPPORT

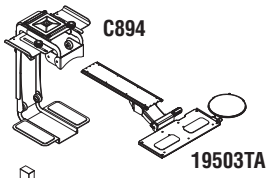

Model No.	Description	Wt.	List Price
C894	CPU Holder CPU width plus 3 1/2" x 16"D x CPU height plus 4 1/2"	20#	$318
19503TA	Combination keyboard/mouse platform 19"W x 8 1/4"D, 9"Dia. mouse platform	15#	$570

Available in Black Only.

POWER POLE

- 12' pole (10' section with 2' extension) can be field cut to desired length. Drill access holes as needed.
- Pole has side mount and top mount options available.
- Accepts up to 1 power conduit and 16 data cables.
- Ceiling infeed. Install per local code.
- Anodized Aluminum finish.

Model No.	Description	Wt.	List Price
EZPP12	12' Power Pole. 1 3/4"D x 2 3/4"W x 12'H Single Channel	10#	$622

VERTICAL CABLE ORGANIZER

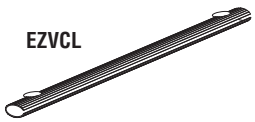

- Clear, serrated plastic wire manager.
- Oval channel shipped in 24" lengths, can easily be field cut to size.
- Open on one side for easy wire access.
- Simple attachment with clear plastic suction cups.

Model No.	Description	List Price
EZVCL	24" Clear Plastic with 2 Suction Cups	$51

WIRE MANAGEMENT CLAMPS

Model No.	Description	List Price
EZWC6	Circular Wire Mgt. Clamps. 1 1/2" base w/Adhesive Tape, .65" in dia. Bag of 6. Black only.	$6

GROMMETS

Model No.	Description	Wt.	List Price
REALS100	Recommended for Desk tops (Silver only) 2 5/8"D	1#	$24

Note: Field cut and installed only.

e5 BOARDS & ACCESSORIES

TACK / MAGNETIC BOARDS

- TAK/MAG board is made of a perforated painted steel front and back sandwiching a cork center.
- Includes painted steel brackets; board and brackets available in White, Silver or Black.
- TAK/MAG board can be used with magnets or push pins.
- TAK/MAG board currently designed to be used only between two Overhead Support Modules, two Corner Supports, or a combination of one of each.

EZTM30

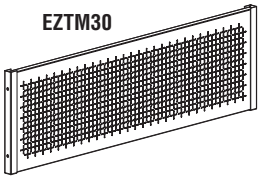

Model No.	Description	List Price
EZTM30	TAK/MAG – Perforated Steel with Cork Center – 29 1/2"W x 5/8"D x 9"H*	$543
EZTM42	TAK/MAG – Perforated Steel with Cork Center – 41 1/2"W x 5/8"D x 9"H*	$585
EZTM48	TAK/MAG – Perforated Steel with Cork Center – 47 1/2"W x 5/8"D x 9"H*	$632

* Specify paint finish for TAK/MAG – White, Tech Silver or Black.

FABRIC & DRY ERASE BOARDS

- Fabric Tack Boards and Dry Erase Boards sized to fit back of surface storage models.
- Attach with supplied Velcro.

Select fabric from Guilford of Maine panel fabric. Fabrics listed in Mayline Corporate Color Program are "standard", any other guilford panel fabric is considered "premier".

Model No.	Dimensions	Standard	Premium (+P)
EZTKB10	10 1/2" Fabric Tack Board, Velcro Attachment	$89	$170
EZTKB13	13 1/2" Fabric Tack Board, Velcro Attachment	$98	$182
EZTKB16	16 1/2" Fabric Tack Board, Velcro Attachment	$110	$195
EZTKB24	22" Fabric Tack Board, Velcro Attachment	$126	$203
EZTKB30	28" Fabric Tack Board, Velcro Attachment	$144	$222
EZTKB36	34" Fabric Tack Board, Velcro Attachment	$160	$239

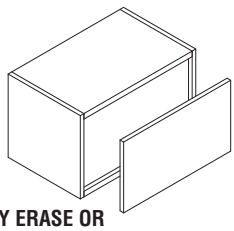

DRY ERASE OR FABRIC PANEL

Model No.	Description	Dimensions	List Price
EZDEB10	Dry Erase White Board, Velcro Attachment*	10 1/2"W x 12 1/2"D x 1/2"H	$107
EZDEB13	Dry Erase White Board, Velcro Attachment*	13 1/2"W x 12 1/2"D x 1/2"H	$117
EZDEB16	Dry Erase White Board, Velcro Attachment*	16 1/2"W x 12 1/2"D x 1/2"H	$130
EZDEB24	Dry Erase White Board, Velcro Attachment	22"W x 12 1/2"D x 1/2"H	$143
EZDEB30	Dry Erase White Board, Velcro Attachment	28"W x 12 1/2"D x 1/2"H	$158
EZDEB36	Dry Erase White Board, Velcro Attachment	34"W x 12 1/2"D x 1/2"H	$170

* Sized to fit 1/2 of the back on a dual access cabinet.

PENCIL TRAY

19400

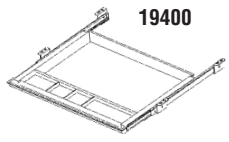

Model No.	Description	Dimensions	Wt.	List Price
19400	Pencil Drawer – Black only	21"W x 16"D x 2"H	4#	$91

SURFACE CONNECTING BRACKET

- Ideal for connecting worksurfaces to one another.

EZBRB

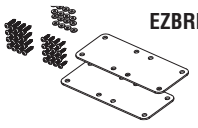

Model No.	Description	Wt.	List Price
EZBRB	Connecting Bracket Kit (2 Brackets, Hardware)	5#	$46

KEEP™ MODULAR WALL SYSTEMS

GSA

Keep™ Modular Wall System (patent pending) is a storage-wall solution that improves productivity by providing ready access to materials, dividing and defining space, and enhancing privacy. It ia easily adaptable to changing needs.

- Cabinet at base of each section required.
- Maximum weight to be placed on the lower portion of the wall.
- Black glides with 3/8" stem and 1" of adjustability.
- Minimal assembly required.
- Cabinets, shelves, panels are infinitely adjustable on the uprights by utilizing enclosed mounting brackets and hardware.
- Two Channels within the upright provide 2 contact points for each cabinet bracket; providing additional strength and anti-slipping support.
- Maximum 100# live load capacity per cabinet/shelf – evenly distributed. Maximum 300# per 84" upright.
- Maximum 3 cabinets per 84" upright section, maximum 2 cabinets per 42" upright section.
- Available w/polished aluminum uprights, tech silver feet and e5 cabinet finishes.

KEEP BUILD-A-WALL WITH STARTER KITS AND ADDER OPTIONS

1] Select Starter Kit Size (84" or 42") with cabinet style of your choice. **2]** Add additional components *(see optional component section)* to build your wall.
3] If more than 1 wall section is desired, select appropriate Adder Typical and additional components to extend wall horizontally.

Model No.	Description	Dimensions	List Price
84"H Starter Wall Configurations			
MW84SOP	Starter Wall w/Open Cabinet	39"W x 28"D x 84"H	$1499
MW84SDA	Starter Wall w/Dual Access Cabinet	39"W x 28"D x 84"H	$1529
MW84SOS	Starter Wall w/Open Cabinet w/2 Sliding Doors	39"W x 28"D x 84"H	$1899
MW84SDS	Starter Wall w/Dual Access Cabinet w/1 Sliding Door each side	39"W x 28"D x 84"H	$1949
84"H Adder Wall Configurations			
MW84AOP	Adder Wall w/Open Cabinet	39"W x 28"D x 84"H	$1099
MW84ADA	Adder Wall w/Dual Access Cabinet	39"W x 28"D x 84"H	$1129
MW84AOS	Adder Wall w/Open Cabinet w/2 Sliding Doors	39"W x 28"D x 84"H	$1499
MW84ADS	Adder Wall w/Dual Access Cabinet w/1 Sliding Door each side	39"W x 28"D x 84"H	$1549

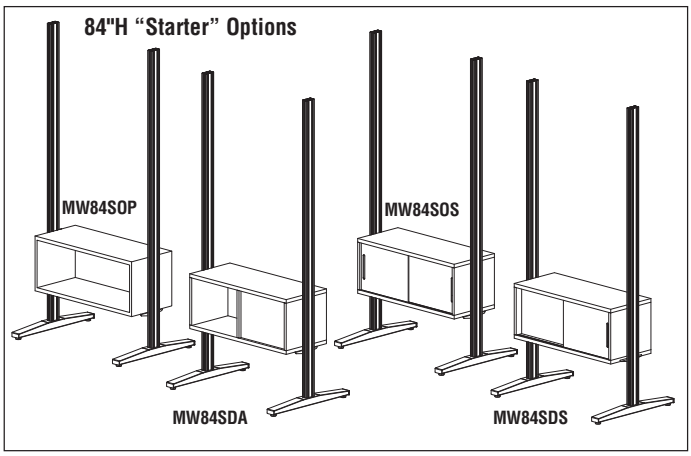

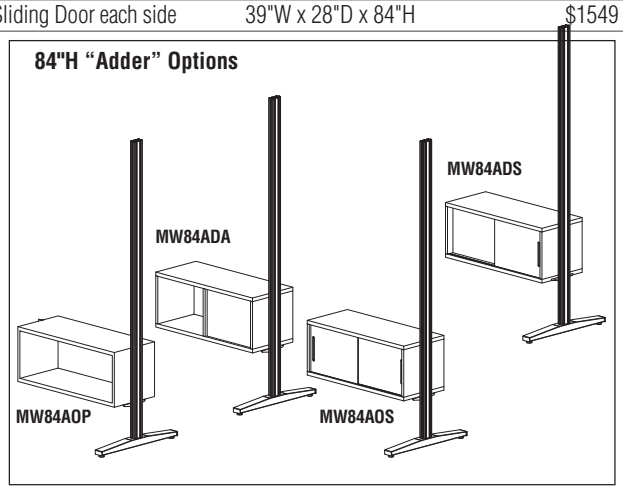

Model No.	Description	Dimensions	List Price
42"H Starter Wall Configurations			
MW42SOP	Starter Wall w/Open Cabinet	39"W x 28"D x 42"H	$1299
MW42SDA	Starter Wall w/Dual Access Cabinet	39"W x 28"D x 42"H	$1329
MW42SOS	Starter Wall w/Open Cabinet w/2 Sliding Doors	39"W x 28"D x 42"H	$1699
MW42SDS	Starter Wall w/Dual Access Cabinet w/1 Sliding Door each side	39"W x 28"D x 42"H	$1749
42"H Adder Wall Configurations			
MW42AOP	Adder Wall w/Open Cabinet	37 1/2"W x 28"D x 42"H	$899
MW42ADA	Adder Wall w/Dual Access Cabinet	37 1/2"W x 28"D x 42"H	$929
MW42AOS	Adder Wall w/Open Cabinet w/2 Sliding Doors	37 1/2"W x 28"D x 42"H	$1299
MW42ADS	Adder Wall w/Dual Access Cabinet w/1 Sliding Door each side	37 1/2"W x 28"D x 42"H	$1349

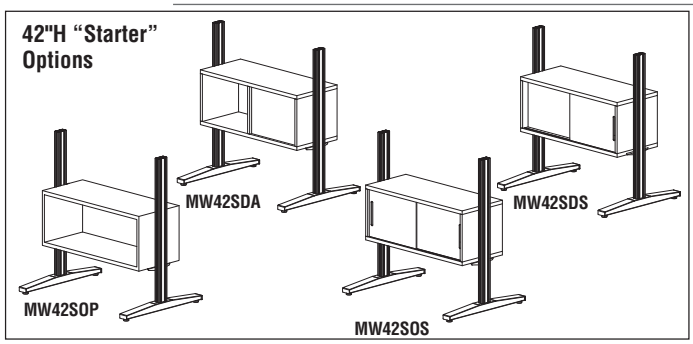

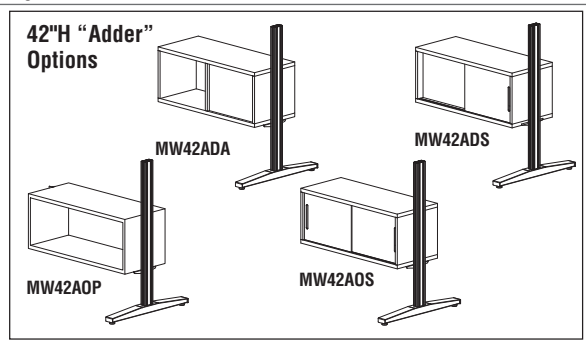

KEEP OPTIONAL COMPONENTS

GSA

CABINET KITS (ATTACHMENT HARDWARE INCLUDED)

- All Cabinets/Shelf are 36"W.
- EWSA36 and EWSA36S are dual-access.

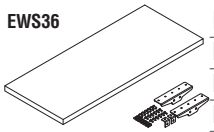

Model No.	Description	Dimensions	Wt.	List Price
EWS36	Flat Shelf	36"W x 15 1/4"D x 1"H	20#	$340
EWH36	Open (No Doors/1-Sided)	36"W x 15 1/4"D x 15"H	78#	$494
EWSA36	2-Sided	36"W x 15 1/4"D x 15"H	81#	$560
EWH36S	Open w/2 Sliding Doors (optional Tack Board back)	36"W x 15 1/4"D x 15"H	85#	$769
EWSA36S	2-Sided w/1 Sliding Door per Side (optional 1/2 Tack Board)	36"W x 15 1/4"D x 15"H	85#	$824

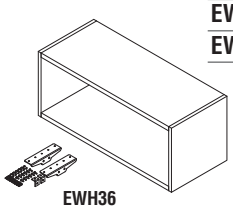

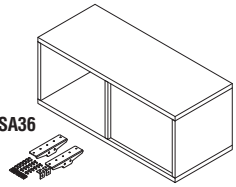

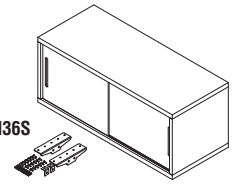

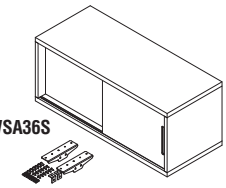

PANEL KITS (ATTACHMENT HARDWARE INCLUDED)

- Panels available in 12" x 36", 15" x 36" and 36" x 36".
- Attachment Hardware included.
- Two-Sided.
- Can be positioned anywhere within the upright channel.

Model No. Two-Sided HPL Dry Erase Panels	Dimensions	List Price
EWPW12	35 3/4"W x 12"H	$299
EWPW15	35 3/4"W x 15"H	$379
EWPW36	35 3/4"W x 36"H	$549

Two-Sided Fabric (Select Guilford of Maine Panel Fabric)*	Dimensions	Std.	Prem. (+P)*
EWPF12	35 3/4"W x 12"H	$399	$499
EWPF15	35 3/4"W x 15"H	$479	$579
EWPF36	35 3/4"W x 36"H	$649	$749

Two-Sided Porcelain-Coated Steel over MDF (Magnetic White)	Dimensions	List Price
EWPM12	35 3/4"W x 12"H	$449
EWPM15	35 3/4"W x 15"H	$529
EWPM36	35 3/4"W x 36"H	$699

*** Select fabric from Guilford of Maine panel fabric. Fabrics listed in Mayline Corporate Color Program are "standard", any other guilford panel fabric is considered "premier" add (+P) to model and use pricing above**

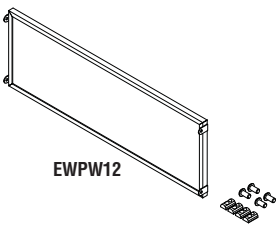

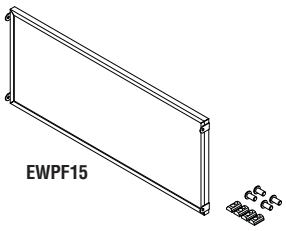

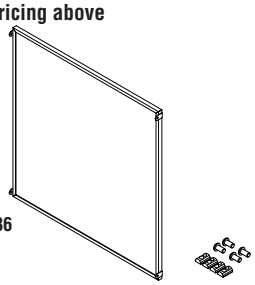

ACCESSORIES

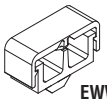

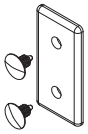

Model No.	Description	Dimensions		List Price
Wire Management Cable Clip				
EWWC	Cable Clip for wire management.	1 1/2"W x 1"D		$12
Top Caps – Needed on 42" Only				
EWTCG	Gray Top Caps.	1 1/2"W x 3"D		$9
Back of Dual-Access Cabinet Option			**Std.**	**Prem. (+P)**
EZTKB16	Tack Board.*	16 1/2"W x 12 1/2"D x 1/2"H	$110	$195
EZDEB16	Dry Erase Board.	16 1/2"W x 12 1/2"D x 1/2"H	$130	N/A
Marker Tray – Sized to fit half of the back of EWSA36 & EWSA36S Cabinets				
EWTRAY	Aluminum Extruded Tray.	36"W x 3"D x 3/4"H		$179
Back of 1-sided Cabinet Options (EWH36)				
EZTKB36	Tack Board.*		$160	$239
EZDEB36	Dry Erase Board.		$170	N/A

KEEP™ SERIES IDEA STARTERS

GSA

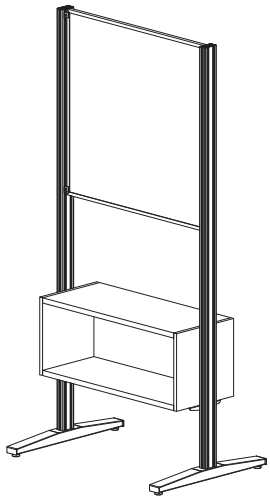

KEEP TYPICAL #1

Consists of:

QTY.	MODEL NO.	DESCRIPTION	LIST PRICE EACH
1	**MW84SOP**	84"H Starter with Open Cabinet	$1499
1	**EWPW36**	36"W x 36"H Two-Sided Dry Erase Board	$549

TOTAL: $2048

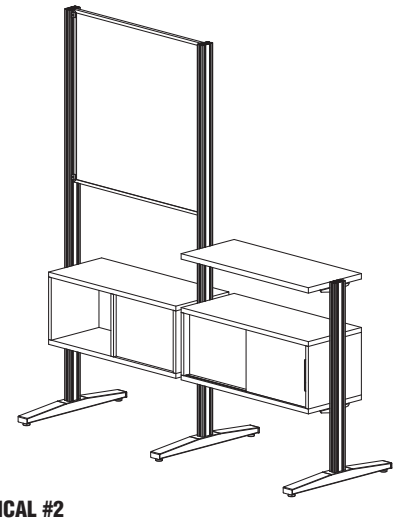

KEEP TYPICAL #2

Consists of:

QTY.	MODEL NO.	DESCRIPTION	LIST PRICE EACH
1	**MW84SDA**	84"H Starter with Dual Access Cabinet	$1529
1	**EWPW36**	36"W x 36"H Whiteboard	$549
1	**MW42ADS**	42"H Adder w/Dual Access	$1349
with 1 Sliding Door per Side			
1	**EWS36**	Flat Shelf	$340

TOTAL: $3767

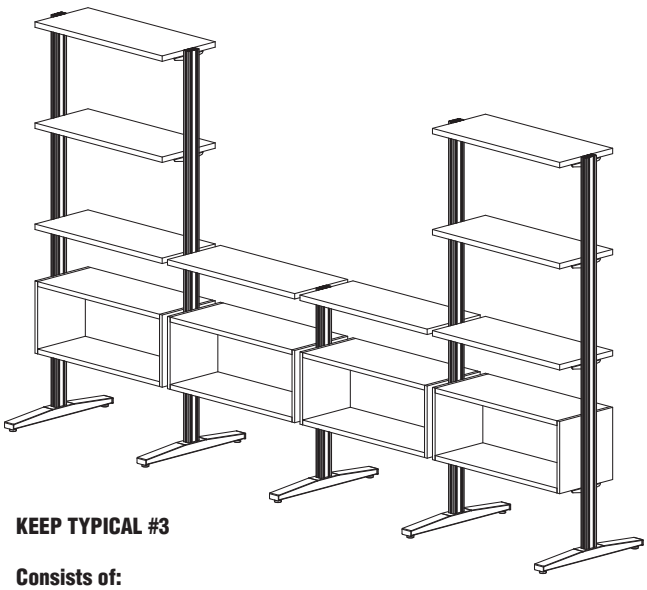

KEEP TYPICAL #3

Consists of:

QTY.	MODEL NO.	DESCRIPTION	LIST PRICE EACH
2	**MW84SOP**	84"H Starter with Open Cabinet	$1499
8	**EWS36**	Flat Shelves	$340
1	**MW42AOP**	42"H Adder with Open Cabinet	$899
1	**EWH36**	Open Cabinet	$494

TOTAL: $7511

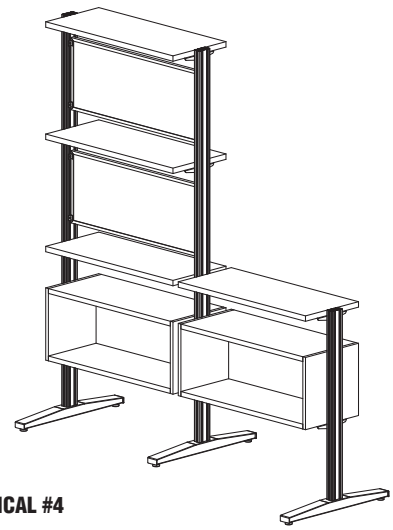

KEEP TYPICAL #4

Consists of:

QTY.	MODEL NO.	DESCRIPTION	LIST PRICE EACH
1	**MW84SOP**	84"H Starter with Open Cabinet	$1499
1	**MW42AOP**	42"H Adder with Open Cabinet	$899
4	**EWS36**	Flat Shelves	$340
2	**EWPF12**	36"W x 12"H Two-Sided Tack Panel	$399

TOTAL: $4556

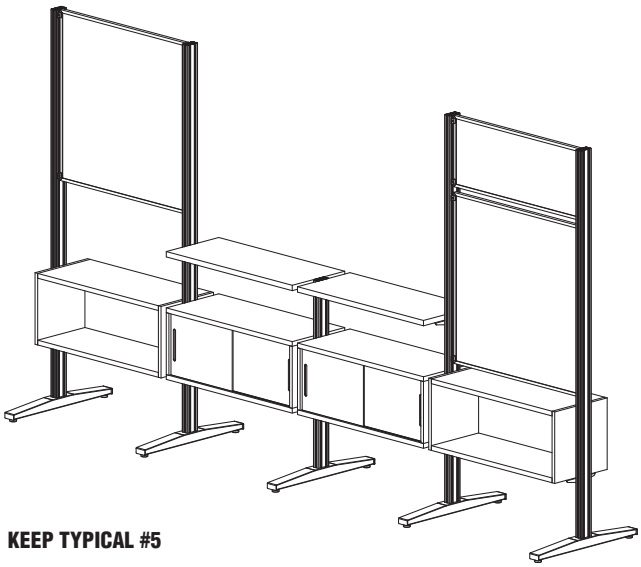

KEEP TYPICAL #5

Consists of:

QTY.	MODEL NO.	DESCRIPTION	LIST PRICE EACH
2	**MW84SOP**	84"H Starter with Open Cabinet	$1499
1	**MW42AOS**	42"H Adder with Dual Sliders	$1299
1	**EWH36S**	Dual Slider Cabinet	$769
2	**EWS36**	Flat Shelves	$340
2	**EWPW36**	Dual-Sided Whiteboard	$549
1	**EWPF12**	36"W x 12"H Tackboard	$399

TOTAL: $7243

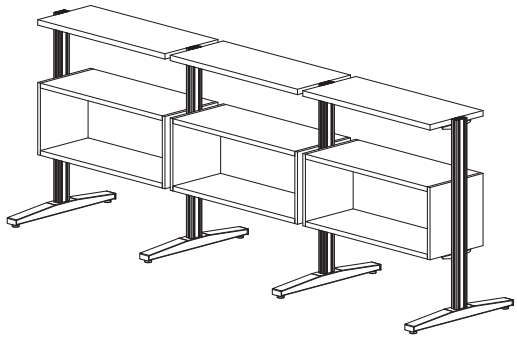

KEEP TYPICAL #6

Consists of:

QTY.	MODEL NO.	DESCRIPTION	LIST PRICE EACH
1	**MW42SOP**	42"H Starter with Open Cabinet	$1299
2	**MW42AOP**	42"H Adder with Open Cabinet	$899
3	**EWS36**	Flat Shelves	$340

TOTAL: $4117

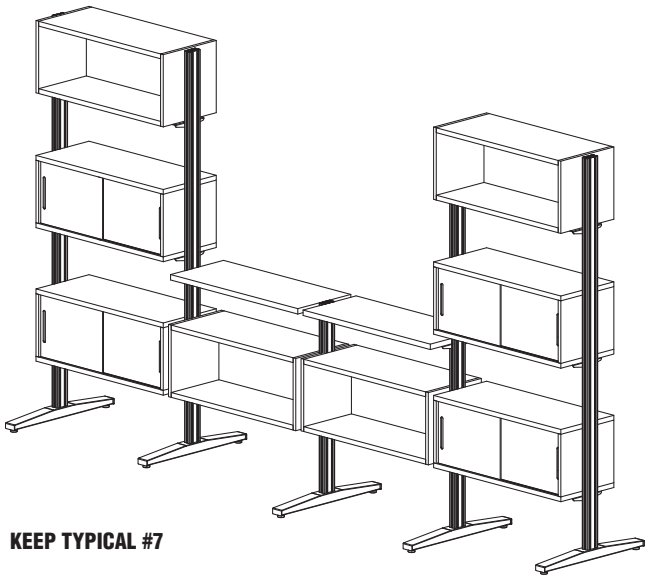

KEEP TYPICAL #7

Consists of:

QTY.	MODEL NO.	DESCRIPTION	LIST PRICE EACH
2	**MW84SOS**	84"H Starter with 2 Sliding Doors	$1899
1	**MW42AOP**	42"H Adder with Open Cabinet	$899
2	**EWH36S**	Dual Sliding Cabinets	$769
3	**EWH36**	Open Cabinets	$494
2	**EWS36**	Flat Shelves	$340

TOTAL: $8397

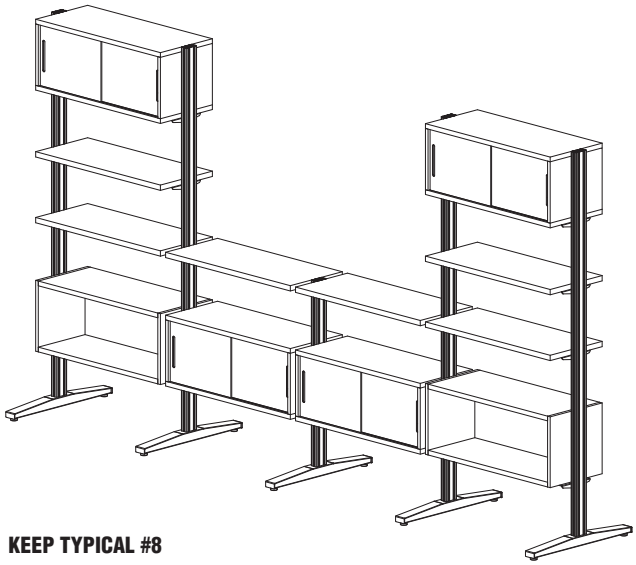

KEEP TYPICAL #8

Consists of:

QTY.	MODEL NO.	DESCRIPTION	LIST PRICE EACH
2	**MW84SOP**	84"H Starter with Open Cabinet	$1499
1	**MW42AOS**	42"H Adder with Sliding Doors	$1299
3	**EWH36S**	Dual Sliding Cabinets	$769
6	**EWS36**	Flat Shelves	$340

TOTAL: $8644

CSII™ MODULAR DESKING

Intertek GSA

Smart Design, Stylish Look, Affordable Price...CSII provides a consistently stylish look with its radiused overhead doors providing high-end style at mid-market pricing. All pedestals and legs are non-handed making specifications and installation amazingly simple with desks featuring a full 30" of filing and/or storage space.

Desks: 29"H Desk height. Legs and modesty panels made from C.R.S. Optional storage pedestals incorporated into base to reduce redundant components. Modesty panel full height on desks – 2/3 height on credenza. Modesty panel can be mounted flush or with 1 1/2" inset. All desks come standard with leveling glides and grommets.

Worksurfaces: 1 1/8" High pressure laminate with PVC T-mold and 3mm edging. Grommets are 1 3/4" diameter.

Peds: Full extension ball bearing slides on all drawers, with adjustable leveling glides, pencil tray and box file divider. Locks standard and allow for lock cores to be changed. Choose Box/Box/File or File/File style. Peds support both legal and letter width files.

Overhead: All steel cabinet body. Contoured door for aesthetics. Doors travel up and over top of unit using ball bearing slides. Standard locks are concealed under cabinet body and are core-removable to create keyed-alike suites. 13 7/8" deep shelf is 20" above desk. Options include: Soft close, tackboard, and task light.

Privacy Panels: Hollow core privacy panels available in tackable fabric. Can be stacked or ganged to create many unique combinations. Panel heights can be combined for three levels of privacy, either 18", 27" or 36"H.

Meets or exceeds all ANSI/BIFMA standards.

All grommets, overhead door and stackable fabric panel trim will match the worksurface edging color (Black, Taupe, Warm Gray & Ice Gray).

Laminate Storage Units: To soften the look and feel of a steel work-station while maintaining the strength and integrity of the system, you can now add e5 laminate storage cabinets including laminate pedestal drawer fronts to the existing steel drawers of your CSII configuration. Storage options include a variety of storage cabinets and opening choices, wardrobes and overhead units. **(See pages 33-36.)** Casegoods are available in six Thermally Fused Laminates with matching HPL top choices with coordinating 3mm PVC T-mold edge banding. See chart below:

THERMALLY FUSED LAMINATE MATCHING HPL COLOR CHART

Mayline TFL Color Name	HPL Color Name	HPL Manufacturer	HPL Number
Summer Suede	Tea Party in Boston	Pionite	PFA42
Cocoa	Alive in Memphis	Pionite	PFA45
Biltmore Cherry	Biltmore Cherry	WilsonArt	7924-60
White	Designer White	WilsonArt	D354-60
Walnut	Columbian Walnut	WilsonArt	7943-38
Raven	Raven	Nevamar	S6033T

NOTE: Custom Laminate Upcharges do not apply for these HPLs.

30" DEEP RECTANGULAR DESK

- Pedestal depth is 30".
- Choice of File/File (F/F) and/or Box/Box/File (B/B/F).
- See page 58 for interior leg panel information.
- 300 lb capacity, evenly ditributed
- Full height modesty panel included.
- Two grommets in surface, standard.
- **Work surfaces available in the six e5 colors; see box above for details.**

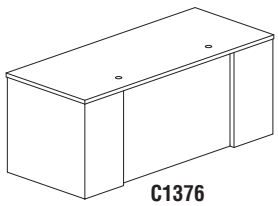

C1376

Model No.	Dimensions	Wt.	List Price	No Modesty Panel (+N) List Price
C1336	48"W x 30"D x 29"H, no ped	114#	$720	$664
C1346	54"W x 30"D x 29"H, no ped	119#	$746	$689
C1356	60"W x 30"D x 29"H, no ped	124#	$776	$713
C1366	66"W x 30"D x 29"H, no ped	132#	$818	$749
C1376	72"W x 30"D x 29"H, no ped	142#	$833	$762

- **30" Deep Rectangular with one pedestal.**

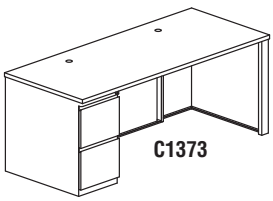

C1373

Model No.	Dimensions	Wt.	List Price	No Modesty Panel (+N) List Price
C1331	48"W x 30"D x 29"H, 1 **B/B/F** ped	157#	$1200	$1142
C1341	54"W x 30"D x 29"H, 1 **B/B/F** ped	162#	$1214	$1158
C1351	60"W x 30"D x 29"H, 1 **B/B/F** ped	167#	$1256	$1191
C1361	66"W x 30"D x 29"H, 1 **B/B/F** ped	175#	$1294	$1224
C1371	72"W x 30"D x 29"H, 1 **B/B/F** ped	185#	$1309	$1238
C1333	48"W x 30"D x 29"H, 1 **F/F** ped	157#	$1200	$1142
C1343	54"W x 30"D x 29"H, 1 **F/F** ped	162#	$1214	$1158
C1353	60"W x 30"D x 29"H, 1 **F/F** ped	167#	$1256	$1191
C1363	66"W x 30"D x 29"H, 1 **F/F** ped	175#	$1294	$1224
C1373	72"W x 30"D x 29"H, 1 **F/F** ped	185#	$1309	$1238

CSII

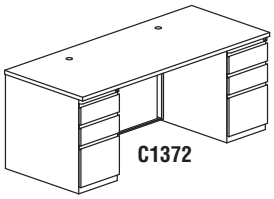
C1372

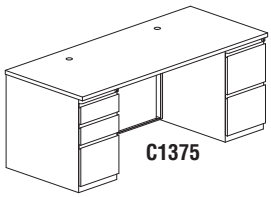
C1375

• 30" Deep Rectangular with two pedestals.

Model No.	Dimensions	Wt.	List Price	No Modesty Panel (+N) List Price
C1342	54"W x 30"D x 29"H, 2 **B/B/F** peds	175#	$1720	$1664
C1352	60"W x 30"D x 29"H, 2 **B/B/F** peds	180#	$1761	$1696
C1362	66"W x 30"D x 29"H, 2 **B/B/F** peds	190#	$1799	$1728
C1372	72"W x 30"D x 29"H, 2 **B/B/F** peds	200#	$1814	$1743
C1345	54"W x 30"D x 29"H, 1 **B/B/F** ped, 1 **F/F** ped	175#	$1720	$1664
C1355	60"W x 30"D x 29"H, 1 **B/B/F** ped, 1 **F/F** ped	180#	$1761	$1696
C1365	66"W x 30"D x 29"H, 1 **B/B/F** ped, 1 **F/F** ped	190#	$1799	$1728
C1375	72"W x 30"D x 29"H, 1 **B/B/F** ped, 1 **F/F** ped	200#	$1814	$1743
C1344	54"W x 30"D x 29"H, 2 **F/F** peds	175#	$1720	$1664
C1354	60"W x 30"D x 29"H, 2 **F/F** peds	180#	$1761	$1696
C1364	66"W x 30"D x 29"H, 2 **F/F** peds	190#	$1799	$1728
C1374	72"W x 30"D x 29"H, 2 **F/F** peds	200#	$1814	$1743

36" DEEP RECTANGULAR DESK

- Pedestal depth is 30".
- 6" conference overhang.
- See page 58 for interior leg panel information.
- Full height modesty panel included.
- Two grommets in surface, standard.
- **Work surfaces available in the six e5 colors; see box on page 50 for details.**

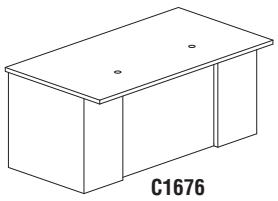
C1676

Model No.	Dimensions	Wt.	List Price	No Modesty Panel (+N) List Price
C1656	60"W x 36"D x 29"H, no ped	139#	$847	$784
C1666	66"W x 36"D x 29"H, no ped	147#	$873	$803
C1676	72"W x 36"D x 29"H, no ped	157#	$899	$827

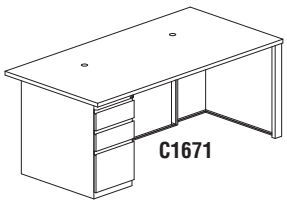
C1671

• 36" Deep Rectangular with one pedestal.

Model No.	Dimensions	Wt.	List Price	No Modesty Panel (+N) List Price
C1651	60"W x 36"D x 29"H, 1 **B/B/F** ped	180#	$1277	$1214
C1661	66"W x 36"D x 29"H, 1 **B/B/F** ped	190#	$1305	$1236
C1671	72"W x 36"D x 29"H, 1 **B/B/F** ped	200#	$1352	$1283
C1653	60"W x 36"D x 29"H, 1 **F/F** ped	180#	$1277	$1214
C1663	66"W x 36"D x 29"H, 1 **F/F** ped	190#	$1305	$1236
C1673	72"W x 36"D x 29"H, 1 **F/F** ped	200#	$1352	$1283

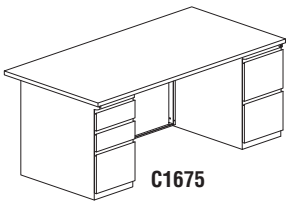
C1675

• 36" Deep Rectangular with two pedestals.

Model No.	Dimensions	Wt.	List Price	No Modesty Panel (+N) List Price
C1652	60"W x 36"D x 29"H, 2 **B/B/F** peds	187#	$1806	$1743
C1662	66"W x 36"D x 29"H, 2 **B/B/F** peds	202#	$1834	$1763
C1672	72"W x 36"D x 29"H, 2 **B/B/F** peds	217#	$1882	$1811
C1655	60"W x 36"D x 29"H, 1 **B/B/F** ped, 1 **F/F** ped	187#	$1806	$1743
C1665	66"W x 36"D x 29"H, 1 **B/B/F** ped, 1 **F/F** ped	202#	$1834	$1763
C1675	72"W x 36"D x 29"H, 1 **B/B/F** ped, 1 **F/F** ped	217#	$1882	$1811
C1654	60"W x 36"D x 29"H, 2 **F/F** peds	187#	$1806	$1743
C1664	66"W x 36"D x 29"H, 2 **F/F** peds	202#	$1834	$1763
C1674	72"W x 36"D x 29"H, 2 **F/F** peds	217#	$1882	$1811

CSII

39" DEEP BOW FRONT DESK

- Pedestal depth is 30".
- Flush Modesty = 9" overhang, Recessed Modesty = 10 1/4" overhang.
- See page 58 for interior leg panel information.
- Full height modesty panel included.
- Two grommets in surface, standard.
- **Work surfaces available in the six e5 colors; see box on page 50 for details.**

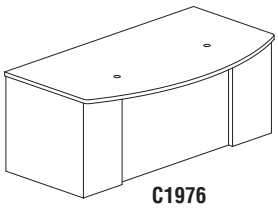
C1976

Model No.	Dimensions	Wt.	List Price	No Modesty Panel (+N) List Price
C1956	60"W x 39"D x 29"H, no ped	140#	$902	$839
C1966	66"W x 39"D x 29"H, no ped	150#	$957	$889
C1976	72"W x 39"D x 29"H, no ped	160#	$986	$918

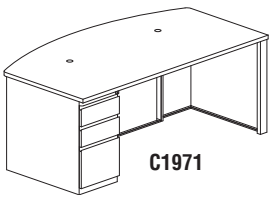
C1971

• 39" Bow Front Desk with one pedestal.

Model No.	Dimensions	Wt.	List Price	No Modesty Panel (+N) List Price
C1951	60"W x 39"D x 29"H, 1 **B/B/F** ped	190#	$1399	$1337
C1961	66"W x 39"D x 29"H, 1 **B/B/F** ped	205#	$1454	$1384
C1971	72"W x 39"D x 29"H, 1 **B/B/F** ped	220#	$1480	$1409
C1953	60"W x 39"D x 29"H, 1 **F/F** ped	190#	$1399	$1337
C1963	66"W x 39"D x 29"H, 1 **F/F** ped	205#	$1454	$1384
C1973	72"W x 39"D x 29"H, 1 **F/F** ped	220#	$1480	$1409

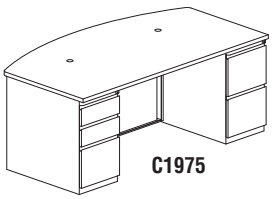
C1975

• 39" Bow Front Desk with two pedestals.

Model No.	Dimensions	Wt.	List Price	No Modesty Panel (+N) List Price
C1952	60"W x 39"D x 29"H, 2 **B/B/F** peds	225#	$1927	$1863
C1962	66"W x 39"D x 29"H, 2 **B/B/F** peds	235#	$1980	$1910
C1972	72"W x 39"D x 29"H, 2 **B/B/F** peds	245#	$2007	$1937
C1955	60"W x 39"D x 29"H, 1 **B/B/F** ped, 1 **F/F** ped	225#	$1927	$1863
C1965	66"W x 39"D x 29"H, 1 **B/B/F** ped, 1 **F/F** ped	235#	$1980	$1910
C1975	72"W x 39"D x 29"H, 1 **B/B/F** ped, 1 **F/F** ped	245#	$2007	$1937
C1954	60"W x 39"D x 29"H, 2 **F/F** peds	225#	$1927	$1863
C1964	66"W x 39"D x 29"H, 2 **F/F** peds	235#	$1980	$1910
C1974	72"W x 39"D x 29"H, 2 **F/F** peds	245#	$2007	$1937

BRIDGES

- Not freestanding, requires support from adjoining worksurfaces.
- Available as straight or contoured bridge.
- Available with full, 2/3 height, or no modesty panel.
- One grommet in surface, standard.
- **Work surfaces available in the six e5 colors; see box on page 50 for details.**

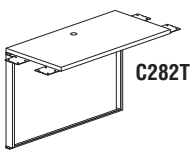
C282T

• Straight Bridge

Model No.	Dimensions	Wt.	List Price
C281T	36"W x 24"D x 29"H, Full Modesty Panel	50#	$364
C282T	42"W x 24"D x 29"H, Full Modesty Panel	57#	$384
C283T	48"W x 24"D x 29"H, Full Modesty Panel	65#	$403
C281S	36"W x 24"D x 29"H, 2/3 Modesty Panel	45#	$356
C282S	42"W x 24"D x 29"H, 2/3 Modesty Panel	53#	$375
C283S	48"W x 24"D x 29"H, 2/3 Modesty Panel	60#	$396

Continued on next page.

• Straight Bridge continued

Model No.	Dimensions	Wt.	List Price
C281N	36"W x 24"D x 29"H, No Modesty Panel	40#	$336
C282N	42"W x 24"D x 29"H, No Modesty Panel	45#	$349
C283N	48"W x 24"D x 29"H, No Modesty Panel	50#	$369

• Contour Bridge

Model No.	Dimensions	Wt.	List Price
C291T	36"W x 24"D x 29"H, Full Modesty Panel	50#	$375
C292T	42"W x 24"D x 29"H, Full Modesty Panel	57#	$397
C293T	48"W x 24"D x 29"H, Full Modesty Panel	65#	$419
C291S	36"W x 24"D x 29"H, 2/3 Modesty Panel	45#	$370
C292S	42"W x 24"D x 29"H, 2/3 Modesty Panel	53#	$392
C293S	48"W x 24"D x 29"H, 2/3 Modesty Panel	60#	$413
C291N	36"W x 24"D x 29"H, No Modesty Panel	40#	$349
C292N	42"W x 24"D x 29"H, No Modesty Panel	45#	$366
C293N	48"W x 24"D x 29"H, No Modesty Panel	50#	$385

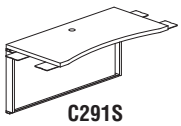

C291S

HEIGHT ADJUSTABLE BRIDGE

- Provides sit to stand adjustability at bridge location.
- Travel Range: 16" of vertical adjustment from 26" to 42": Full travel time is 18 seconds.
- Drive System: 110V, 60 H input, 24V DC motor. 150 lb. capacity. Draws 1.2 amps under full load.
- No modesty panel or grommet.
- **Work surfaces available in the six e5 colors; see box on page 50 for details.**

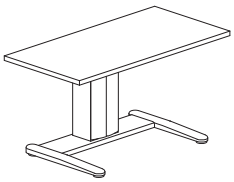

Model No.	Dimensions	Wt.	List Price
C36A	36"W x 24"D	115#	$2037
C42A	42"W x 24"D	119#	$2053
C48A	48"W x 24"D	125#	$2134

RETURNS

- Used to create "L" return.
- Available in 24"D or 30"D depths.
- Returns are non-handed.
- See page 58 for interior leg panel information.
- Full height modesty panel included.
- One grommet in surface, standard.
- Must attach to a freestanding desk unit.
- **Work surfaces available in the six e5 colors; see box on page 50 for details.**

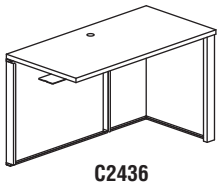

C2436

• 24" Deep Returns

Model No.	Dimensions	Wt.	List Price	No Modesty Panel (+N) List Price
C2486	24"W x 24"D x 29"H, no ped	65#	$462	$414
C2406	30"W x 24"D x 29"H, no ped	70#	$485	$437
C2416	36"W x 24"D x 29"H, no ped	75#	$517	$469
C2426	42"W x 24"D x 29"H, no ped	82#	$552	$495
C2436	48"W x 24"D x 29"H, no ped	89#	$590	$535
C2446	54"W x 24"D x 29"H, no ped	96#	$679	$623
C2456	60"W x 24"D x 29"H, no ped	103#	$709	$633
C2466	66"W x 24"D x 29"H, no ped	110#	$759	$681
C2476	72"W x 24"D x 29"H, no ped	117#	$790	$713

CSII

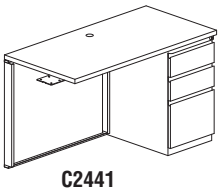
C2441

• 24" Deep with one pedestal.

Model No.	Dimensions	Wt.	List Price	No Modesty Panel (+N) List Price
C2481	24"W x 24"D x 29"H, 1 **B/B/F** ped	94#	$919	$869
C2401	30"W x 24"D x 29"H, 1 **B/B/F** ped	99#	$949	$900
C2411	36"W x 24"D x 29"H, 1 **B/B/F** ped	104#	$980	$930
C2421	42"W x 24"D x 29"H, 1 **B/B/F** ped	111#	$1021	$966
C2431	48"W x 24"D x 29"H, 1 **B/B/F** ped	118#	$1062	$1004
C2441	54"W x 24"D x 29"H, 1 **B/B/F** ped	125#	$1116	$1059
C2451	60"W x 24"D x 29"H, 1 **B/B/F** ped	132#	$1174	$1096
C2461	66"W x 24"D x 29"H, 1 **B/B/F** ped	139#	$1214	$1137
C2471	72"W x 24"D x 29"H, 1 **B/B/F** ped	146#	$1253	$1175
C2483	24"W x 24"D x 29"H, 1 **F/F** ped	94#	$919	$869
C2403	30"W x 24"D x 29"H, 1 **F/F** ped	99#	$949	$900
C2413	36"W x 24"D x 29"H, 1 **F/F** ped	104#	$980	$930
C2423	42"W x 24"D x 29"H, 1 **F/F** ped	111#	$1021	$966
C2433	48"W x 24"D x 29"H, 1 **F/F** ped	118#	$1062	$1004
C2443	54"W x 24"D x 29"H, 1 **F/F** ped	125#	$1116	$1059
C2453	60"W x 24"D x 29"H, 1 **F/F** ped	132#	$1174	$1096
C2463	66"W x 24"D x 29"H, 1 **F/F** ped	139#	$1214	$1137
C2473	72"W x 24"D x 29"H, 1 **F/F** ped	146#	$1253	$1175

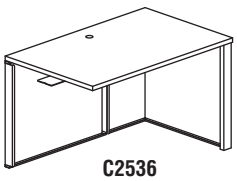
C2536

• 30" Deep Returns

Model No.	Dimensions	Wt.	List Price	No Modesty Panel (+N) List Price
C2586	24"W x 30"D x 29"H, no ped	84#	$508	$459
C2506	30"W x 30"D x 29"H, no ped	89#	$540	$492
C2516	36"W x 30"D x 29"H, no ped	94#	$581	$532
C2526	42"W x 30"D x 29"H, no ped	101#	$605	$550
C2536	48"W x 30"D x 29"H, no ped	109#	$647	$589
C2546	54"W x 30"D x 29"H, no ped	119#	$746	$689
C2556	60"W x 30"D x 29"H, no ped	123#	$773	$697
C2566	66"W x 30"D x 29"H, no ped	133#	$808	$732
C2576	72"W x 30"D x 29"H, no ped	141#	$887	$808

• 30" Deep with one pedestal.

Model No.	Dimensions	Wt.	List Price	No Modesty Panel (+N) List Price
C2581	24"W x 30"D x 29"H, 1 **B/B/F** ped	123#	$976	$927
C2501	30"W x 30"D x 29"H, 1 **B/B/F** ped	128#	$1009	$959
C2511	36"W x 30"D x 29"H, 1 **B/B/F** ped	133#	$1040	$991
C2521	42"W x 30"D x 29"H, 1 **B/B/F** ped	140#	$1084	$1026
C2531	48"W x 30"D x 29"H, 1 **B/B/F** ped	147#	$1120	$1065
C2541	54"W x 30"D x 29"H, 1 **B/B/F** ped	153#	$1209	$1154
C2551	60"W x 30"D x 29"H, 1 **B/B/F** ped	162#	$1248	$1171
C2561	66"W x 30"D x 29"H, 1 **B/B/F** ped	170#	$1294	$1217
C2571	72"W x 30"D x 29"H, 1 **B/B/F** ped	180#	$1375	$1297
C2583	24"W x 30"D x 29"H, 1 **F/F** ped	123#	$976	$927
C2503	30"W x 30"D x 29"H, 1 **F/F** ped	128#	$1009	$959
C2513	36"W x 30"D x 29"H, 1 **F/F** ped	133#	$1040	$991
C2523	42"W x 30"D x 29"H, 1 **F/F** ped	140#	$1084	$1026
C2533	48"W x 30"D x 29"H, 1 **F/F** ped	147#	$1120	$1065
C2543	54"W x 30"D x 29"H, 1 **F/F** ped	153#	$1209	$1154
C2553	60"W x 30"D x 29"H, 1 **F/F** ped	162#	$1248	$1171
C2563	66"W x 30"D x 29"H, 1 **F/F** ped	170#	$1294	$1217
C2573	72"W x 30"D x 29"H, 1 **F/F** ped	180#	$1375	$1297

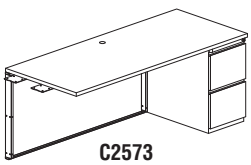
C2573

STAND ALONE CORNER SURFACE

- Corner units can be used as a freestanding desk or as part of a larger configuration.
- One grommet in surface, standard.
- **Work surfaces available in the six e5 colors; see box on page 50 for details.**
- Full height modesty panels included.
- See page 58 for interior leg panel information.

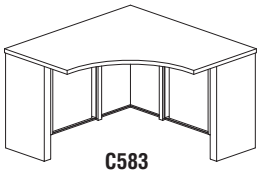

C583

Model No.	Dimensions	Wt.	List Price	No Modesty Panel (+N) List Price
C542	24"D x 42"W x 42"W x 24"D x 29"H	124#	$1133	$1062
C552	30"D x 42"W x 42"W x 30"D x 29"H	129#	$1157	$1087
C583	24"D x 48"W x 48"W x 24"D x 29"H	131#	$1217	$1062
C593	30"D x 48"W x 48"W x 30"D x 29"H	143#	$1240	$1157

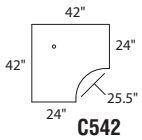

C542

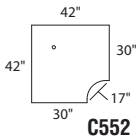

C552

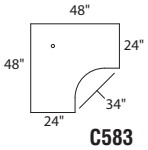

C583

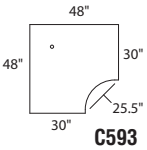

C593

24" DEEP CREDENZA

- Pedestal depth is 24".
- Two grommets in surface, standard.
- See page 58 for interior leg panel information.
- **Work surfaces available in the six e5 colors; see box on page 50 for details.**
- 2/3 height modesty panel included.
- F/F and/or B/B/F available.
- Pedestals and legs are non-handed to allow installation on either left or right.

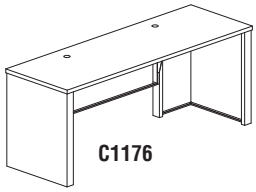

C1176

Model No.	Dimensions	Wt.	List Price	No Modesty Panel (+N) List Price
C1136	48"W x 24"D x 29"H, no ped	94#	$703	$661
C1146	54"W x 24"D x 29"H, no ped	101#	$746	$703
C1156	60"W x 24"D x 29"H, no ped	108#	$759	$709
C1166	66"W x 24"D x 29"H, no ped	115#	$787	$737
C1176	72"W x 24"D x 29"H, no ped	122#	$816	$766

- **Credenza with one pedestal.**

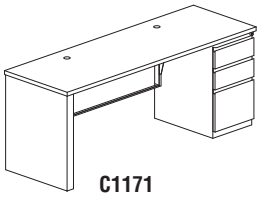

C1171

Model No.	Dimensions	Wt.	List Price	No Modesty Panel (+N) List Price
C1131	48"W x 24"D x 29"H, 1 **B/B/F** ped	130#	$1167	$1123
C1141	54"W x 24"D x 29"H, 1 **B/B/F** ped	137#	$1187	$1145
C1151	60"W x 24"D x 29"H, 1 **B/B/F** ped	144#	$1214	$1165
C1161	66"W x 24"D x 29"H, 1 **B/B/F** ped	151#	$1252	$1203
C1171	72"W x 24"D x 29"H, 1 **B/B/F** ped	158#	$1288	$1239
C1133	48"W x 24"D x 29"H, 1 **F/F** ped	130#	$1167	$1123
C1143	54"W x 24"D x 29"H, 1 **F/F** ped	137#	$1187	$1145
C1153	60"W x 24"D x 29"H, 1 **F/F** ped	144#	$1214	$1165
C1163	66"W x 24"D x 29"H, 1 **F/F** ped	151#	$1252	$1203
C1173	72"W x 24"D x 29"H, 1 **F/F** ped	160#	$1288	$1239

CSII

- **Credenza with two pedestals.**

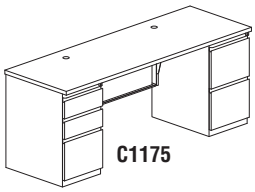
C1175

Model No.	Dimensions	Wt.	List Price	No Modesty Panel (+N) List Price
C1142	54"W x 24"D x 29"H, 2 **B/B/F** peds	178#	$1678	$1635
C1152	60"W x 24"D x 29"H, 2 **B/B/F** peds	185#	$1705	$1662
C1162	66"W x 24"D x 29"H, 2 **B/B/F** peds	192#	$1742	$1686
C1172	72"W x 24"D x 29"H, 2 **B/B/F** peds	204#	$1779	$1723
C1145	54"W x 24"D x 29"H, 1 **B/B/F** ped, 1 **F/F** ped	178#	$1678	$1635
C1155	60"W x 24"D x 29"H, 1 **B/B/F** ped, 1 **F/F** ped	185#	$1705	$1662
C1165	66"W x 24"D x 29"H, 1 **B/B/F** ped, 1 **F/F** ped	192#	$1742	$1686
C1175	72"W x 24"D x 29"H, 1 **B/B/F** ped, 1 **F/F** ped	204#	$1779	$1723
C1144	54"W x 24"D x 29"H, 2 **F/F** peds	178#	$1678	$1635
C1154	60"W x 24"D x 29"H, 2 **F/F** peds	185#	$1705	$1662
C1164	66"W x 24"D x 29"H, 2 **F/F** peds	187#	$1742	$1686
C1174	72"W x 24"D x 29"H, 2 **F/F** peds	199#	$1779	$1723

TILT TOP TABLES

- Pencil stop standard in worksurface.
- Top may be positioned from 0˚ to 60˚ in 19 preset positions.
- **Work surfaces available in the six e5 colors; see box on page 50 for details.**
- No grommet.
- Interior leg panel cannot be used due to frame of tilt-top mechanism.

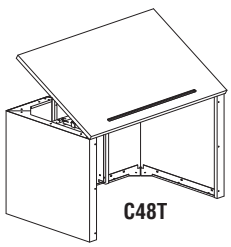
C48T

Model No.	Dimensions	Wt.	List Price
C36T	36"W x 30"D x 29"H*	130#	$1237
C48T	48"W x 30"D x 29"H*	150#	$1340

** When mounting straightedges to worksurface, order next size smaller straight edge – use 10104 Hardware Bag.*

- Return style to be used when attaching to desks.

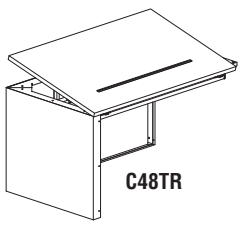
C48TR

Model No.	Dimensions	Wt.	List Price
C36TR	36"W x 30"D x 29"H*	110#	$1089
C48TR	48"W x 30"D x 29"H*	130#	$1190

** When mounting straightedges to worksurface, order next size smaller straight edge – use 10104 Hardware Bag.*

END TEAM TABLES

- Half round, team tables connect to two CSII desks that are placed back to back.
- Cannot be used when integrated pedestal is on desk end as it is secured to desk leg.
- One grommet in surface, standard.
- **Work surfaces available in the six e5 colors; see box on page 50 for details.**

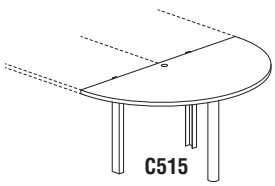
C515

Model No.	Dimensions	Wt.	List Price
C523	25"W x 48"D x 29"H	85#	$670
C515	31"W x 60"D x 29"H	78#	$699

CSII

PENINSULA FREESTANDING TABLE

- Peninsula tables provide additional workspace for conferencing and shared work applications.
- Attaches to right or left side of bridges or returns.
- **Work surfaces available in the six e5 colors; see box on page 50 for details.**
- No grommet.
- Interior leg panel cannot be used due to unique "U"-shaped leg.

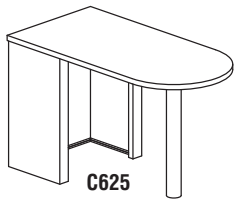

• 24" Deep Peninsula Tables

Model No.	Dimensions	Wt.	List Price
C625	60"W x 24"D x 29"H	56#	$1224
C626	66"W x 24"D x 29"H	101#	$1453
C627	72"W x 24"D x 29"H	106#	$1487

PENINSULA POST STYLE

- Not freestanding, requires adjacent table.
- Cannot be used when integrated pedestal is on desk end.
- No grommet.
- **Work surfaces available in the six e5 colors; see box on page 37 for details.**

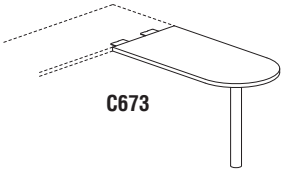

• 24" Deep Peninsula Tables

Model No.	Dimensions	Wt.	List Price
C673	48"W x 24"D x 29"H	55#	$667

• 30" Deep Peninsula Tables

Model No.	Dimensions	Wt.	List Price
C685	60"W x 30"D x 29"H	75#	$728
C687	72"W x 30"D x 29"H	85#	$783

J TABLES

- Combines free standing worktable and corner unit into one unit.
- "J" Tables can be used free standing or as part of a larger configuration.
- Can be used in left/right configurations to create multi person work areas.
- Allows for a very compact work area.
- Right (R) and left (L) hand versions available **(left hand version is shown.)**
- **Work surfaces available in the six e5 colors; see box on page 50 for details.**
- Modesty panels included, 48" return side has full modesty panel, 72" side has 2/3 height modesty panel.
- Two grommets in surface, standard.
- See page 58 for interior leg panel information.

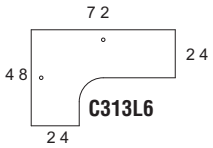

Model No.	Dimensions	Wt.	List Price	No Modesty Panel (+N) List Price
C313L6	72"W x 48"D x 29"H x 24"D return left, no ped	175#	$1319	$1234
C313R6	72"W x 48"D x 29"H x 24"D return right, no ped	175#	$1319	$1234
C313L1	72"W x 48"D x 29"H x 24"D return left w/ one **B/B/F** ped	214#	$1677	$1593
C313R1	72"W x 48"D x 29"H x 24"D return right w/ one **B/B/F** ped	214#	$1677	$1593
C313L3	72"W x 48"D x 29"H x 24"D return left w/ one **F/F** ped	214#	$1677	$1593
C313R3	72"W x 48"D x 29"H x 24"D return right w/ one **F/F** ped	214#	$1677	$1593

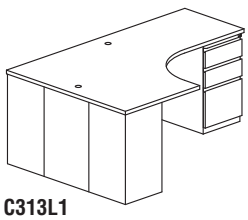

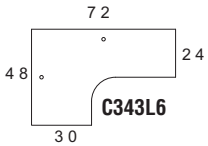

Model No.	Dimensions	Wt.	List Price	No Modesty Panel (+N) List Price
C343L6	72"W x 48"D x 29"H x 30"D return left, no ped	175#	$1319	$1234
C343R6	72"W x 48"D x 29"H x 30"D return right, no ped	175#	$1319	$1234
C343L1	72"W x 48"D x 29"H x 30"D return left w/ one **B/B/F** ped	224#	$1677	$1593
C343R1	72"W x 48"D x 29"H x 30"D return right w/ one **B/B/F** ped	224#	$1677	$1593
C343L3	72"W x 48"D x 29"H x 30"D return left w/ one **F/F** ped	224#	$1677	$1593
C343R3	72"W x 48"D x 29"H x 30"D return right w/ one **F/F** ped	224#	$1677	$1593

CSII

P TABLES

- The "P" Table combines a reference surface with a peninsula table.
- Right (R) and left (L) hand versions available
- One grommet in surface, standard.
- Allows for a very compact work area
- Full height modesty panel included.
- **Work surfaces available in the six e5 colors; see box on page 50 for details.**

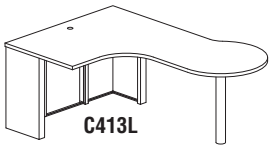

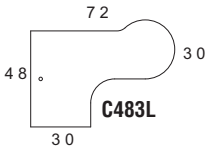

- **24"D Return with conference end.**

Model No.	Dimensions	Wt.	List Price	No Modesty Panel (+N) List Price
C413L	72"W x 48"D x 29"H x 24"D return left conference	145#	$1333	$1249
C413R	72"W x 48"D x 29"H x 24"D return right conference	145#	$1333	$1249

- **30"D Return with conference end.**

Model No.	Dimensions	Wt.	List Price	No Modesty Panel (+N) List Price
C483L	72"W x 48"D x 29"H x 30"D return left conference	152#	$1333	$1234
C483R	72"W x 48"D x 29"H x 30"D return right conference	152#	$1333	$1234

INTERIOR LEG PANEL

- Attaches to leg interior for a clean appearance.
- Provides space to conceal cable management from surface to floor.
- Easy Assembly – Adheres with magnetic tape.

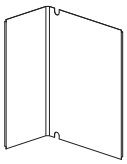

Model No.	Dimensions	Wt.	List Price
CL15	11 1/2"W x 11 1/2"D x 27 1/4"H	9#	$122
CL24	11 1/2"W x 20 1/4"D x 27 1/4"H	11#	$154
CL30	11 1/2"W x 26 1/2"D x 27 1/4"H	13#	$162

KEYBOARD SUPPORTS

- Track is 16" long.

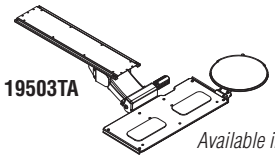

Model No.	Description	Wt.	List Price
19503TA	Combination keyboard/mouse platform 19"W x 8 1/4"D, 9"Dia. mouse platform	15#	$570

Available in Black Only.

PENCIL DRAWER

- Attaches to underside of worksurface.
- Full extension slides.

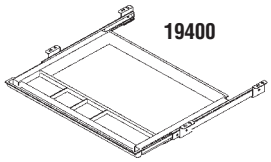

Model No.	Dimensions	Wt.	List Price
19400	21"W x 16"D x 2"H	4#	$91

Available in Black Only.

CPU DOLLY

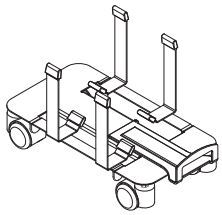

- Automatically adjusts to support CPUs up to 9" wide.
- Adjustable base handle accommodates CPUs of any depth.
- Rolls easily on four 2" double casters to facilitate access to cables, ports, and drives.

Model No.	Dimensions	Wt.	List Price
C893	8 1/2"W x 15"D x CPU height plus 3 3/4"	10#	$227

Available in Black Only.

CSII

CPU HOLDER

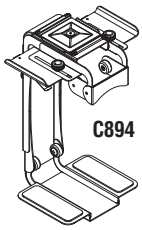

- Easily adjusts to fit CPUs 3"-9 1/2" wide and 12"-22" tall.
- Slides easily and smoothly on nylon glides on 16" track.
- Designed to easily support CPUs weighing up to 70 lbs.
- Rotates a full 360˚ for complete access to cables and ports.

Model No.	Dimensions	Wt.	List Price
C894	CPU width plus 3 1/2" x 16"D x CPU height plus 4 1/2"	20#	$318

Available in Black Only.

STEEL STORAGE UNITS

OPEN SHELF OVERHEAD

- All steel cabinet body.
- Accepts optional fabric tack panel and task light.
- 13 7/8" deep shelf is 20" above desk.

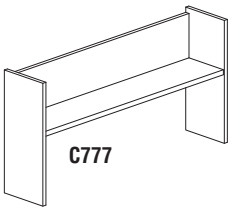

Model No.	Dimensions	Wt.	List Price
C7721	42"W x 14"D x 36"H	55#	$526
C773	48"W x 14"D x 36"H	58#	$554
C775	60"W x 14"D x 36"H	65#	$597
C777	72"W x 14"D x 36"H	75#	$655

FLIPPER DOOR OVERHEAD

- All steel cabinet body.
- 13 7/8" deep shelf is 20" above desk.
- Locks standard. Concealed under cabinet body and core removable.
- Accepts optional fabric tack panel and task light.
- Contoured door for aesthetics.
- **Door color matches accenting trim components (grommets, worksurface T-mold and privacy panel kits). Available in Black, Taupe, Warm Gray and Ice Gray.**

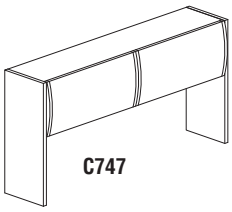

Model No.	Dimensions	Wt.	List Price
C7421	42"W x 15"D x 36"H	80#	$782
C743	48"W x 15"D x 36"H	85#	$841
C745	60"W x 15"D x 36"H	103#	$1038
C746	66"W x 15"D x 36"H	108#	$1094
C747	72"W x 15"D x 36"H	115#	$1156

FLIPPER DOOR OVERHEAD WITH SOFT CLOSE FEATURE

- Sold as a complete overhead unit.
- Same specifications as Overhead Flipper Door.
- Enhanced safety feature ensures controlled movement with pneumatic cylinder.

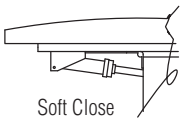

Model No.	Dimensions	Wt.	List Price
C7621	42"W x 15"D x 36"H	80#	$962
C763	48"W x 15"D x 36"H	85#	$1187
C765	60"W x 15"D x 36"H	103#	$1386
C766	66"W x 15"D x 36"H	108#	$1442
C767	72"W x 15"D x 36"H	115#	$1503

CSII

FABRIC TACK PANEL FOR OVERHEAD

- Tack panel attaches to overhead flipper door unit and overhead shelf.
- Steel frame for mounting included.
- Choose from our Corporate fabrics found on page 63 or special order any Guilford of Maine fabric.
- Optional tack panel provides space at top and bottom for cabling.

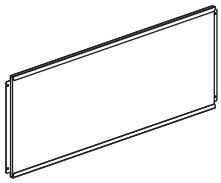

Model No.	Dimensions		Wt.	List Price
C8621	39"W x 1/2"D x 17"H	(For use with 42" Overhead)	18#	$281
C863	45"W x 1/2"D x 17"H	(For use with 48" Overhead)	21#	$285
C865	57"W x 1/2"D x 17"H	(For use with 60" Overhead)	23#	$315
C866	63"W x 1/2"D x 17"H	(For use with 66" Overhead)	25#	$330
C867	69"W x 1/2"D x 17"H	(For use with 72" Overhead)	27#	$358

TASK LIGHTING

- Task lighting attaches to overhead flipper door unit and overhead shelf.
- Uses energy efficient 15W T8 bulb.
- Includes the diffuser lens.

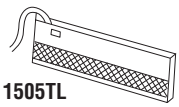

1505TL

Model No.	Dimensions	Wt.	List Price
1505TL	20"W x 8"D x 2"H	7#	$314

Available in Black Only.

KEYED ALIKE LOCK TUMBLERS

Please read carefully to facilitate proper ordering or call customer service at 1-800-822-8037 for assistance.

CSII pedestals ship with keyed alike locks already installed. CSII overheads ship with randomly numbered paired locks (per overhead). To key alike suites of product order the appropriate quantity of like numbered core kits for each workstation. Removable Core Kits include one core, two keys, one core removal tool and instructions. Removable Lock Core Kits available from CLCK1 thru CLCK22.

CLCK1

Model No.	Description	Wt.	List Price
CLCK1 through **CLCK22**	Removable Lock Core Kit	1#	$36
C88MKEYH	Master Key	1#	$16
Q618	Core Removal Tool	1#	$20

Available in Silver Only.

Note: Tumblers are specific to CSII peds, CSII overheads, lateral files and "P" style peds.

PEDESTALS

- Full width "J" style pulls.
- Locks standard.
- Supports letter and legal file widths.
- Full extension ball bearing slides.
- Leveling glides have 5/8" of adjustability.
- Available in 5 colors: Putty, Black, Mist, Medium Tone, and Desert Sage.
- Unique recessed base design allows casters to be added without adding additional height to the pedestal.
- If not integrating pedestal as a leg, must order pedestal as follows – 24"D surface use 17 1/2"D pedestal, 30", 36" and 39"D surfaces use 24"D pedestal.
- Thermally Fused Laminate drawer head conversion kits are now available so pedestal fronts can match laminate storage cabinets.

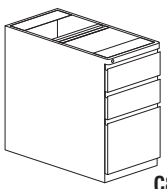

C8817B

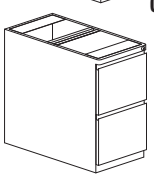

C8817F

Model No.	Description	Wt.	List Price
C8817B	15"W x 17 1/2"D x 28"H - **B/B/F**	50#	$596
C8817F	15"W x 17 1/2"D x 28"H - **F/F**	48#	$596
C8824B	15"W x 24"D x 28"H - **B/B/F**	65#	$617
C8824F	15"W x 24"D x 28"H - **F/F**	60#	$617
C8830B	15"W x 30"D x 28"H - **B/B/F**	75#	$636
C8830F	15"W x 30"D x 28"H - **F/F**	67#	$636
C8817M	17"D - Mobile Kit	28#	$83
C8824M	24"D - Mobile Kit	31#	$86
C8830M	30"D - Mobile Kit	34#	$90
EZCSHB	BBF TFL Drawer Head Conversion Kit	8#	$191
EZCSHF	FF TFL Drawer Head Conversion Kit	8#	$191

LATERAL FILES

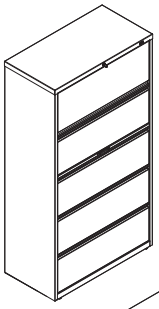

HLT365

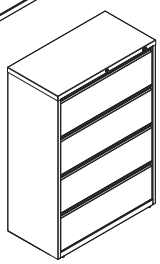

HLT364

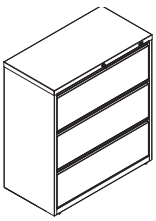

HLT363

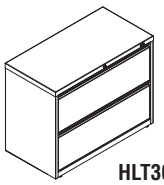

HLT362

- Full drawer extension on steel ball bearing telescoping slides.
- All units feature anti-tipping drawer interlock system that allows only one drawer open at a time.
- Full width recessed designer drawer pulls.
- Side to side rails support letter, legal and/or A4 filing.
- Top drawer of 5-Drawer Lateral is a roll out shelf.
- Extendable posting shelf between third and fourth drawer on 5-Drawer Laterals.
- All files ship keyed random.
- Features adjustable leveling glides.
- Counter weight included to meet ANSI/BIFMA stability requirements.
- Optionial Front-to-Back filing rails (4-pk) Black only.
- Optional divider kit available (10-pk) Black only.
- UL GREENGUARD GOLD certified.
- **Available in Black, Medium Tone, Desert Sage, and Mist. Allow 4-6 week lead time for orders larger than 30 cabinets.**

Model No.	Description	Dimensions	Wt.	List Price
HLT425	42"W, 5-Drawer Lateral File	42"W x 18 5/8"D x 67 5/8"H	230#	$1727
HLT365	36"W, 5-Drawer Lateral File	36"W x 18 5/8"D x 67 5/8"H	202#	$1613
HLT305	30"W, 5-Drawer Lateral File	30"W x 18 5/8"D x 67 5/8"H	179#	$1515
HLT424	42"W, 4-Drawer Lateral File	42"W x 18 5/8"D x 52 1/2"H	195#	$1447
HLT364	36"W, 4-Drawer Lateral File	36"W x 18 5/8"D x 52 1/2"H	174#	$1281
HLT304	30"W, 4-Drawer Lateral File	30"W x 18 5/8"D x 52 1/2"H	148#	$1112
HLT423	42"W, 3-Drawer Lateral File	42"W x 18 5/8"D x 40 1/4"H	173#	$1108
HLT363	36"W, 3-Drawer Lateral File	36"W x 18 5/8"D x 40 1/4"H	153#	$1029
HLT303	30"W, 3-Drawer Lateral File	30"W x 18 5/8"D x 40 1/4"H	133#	$960
HLT422	42"W, 2-Drawer Lateral File	42"W x 18 5/8"D x 28"H	144#	$995
HLT362	36"W, 2-Drawer Lateral File	36"W x 18 5/8"D x 28"H	123#	$852
HLT302	30"W, 2-Drawer Lateral File	30"W x 18 5/8"D x 28"H	101#	$710
HLTFBR4	Front-to-Back Filing rails (4-pk)	2 3/4"W x 19 1/2"D x 2 3/4"H	2.5#	$50
HLTDV10	Divider kit (10-pk)	5 1/2"W x 13 1/2"D x 1"H	8.5#	$85

CSII STACKABLE PRIVACY PANELS

GIZA/CAP

To Specify:

1. Determine Privacy Configuration by calculating corresponding worksurface dimensions.
2. Select required panel widths to match worksurface dimensions and panel height for desired privacy level.
3. Determine finishing kits required based on overall panel height and connection method.
4. Determine desired finishing kit color (Matches Corporate Laminate T-mold offering) and desired fabric.

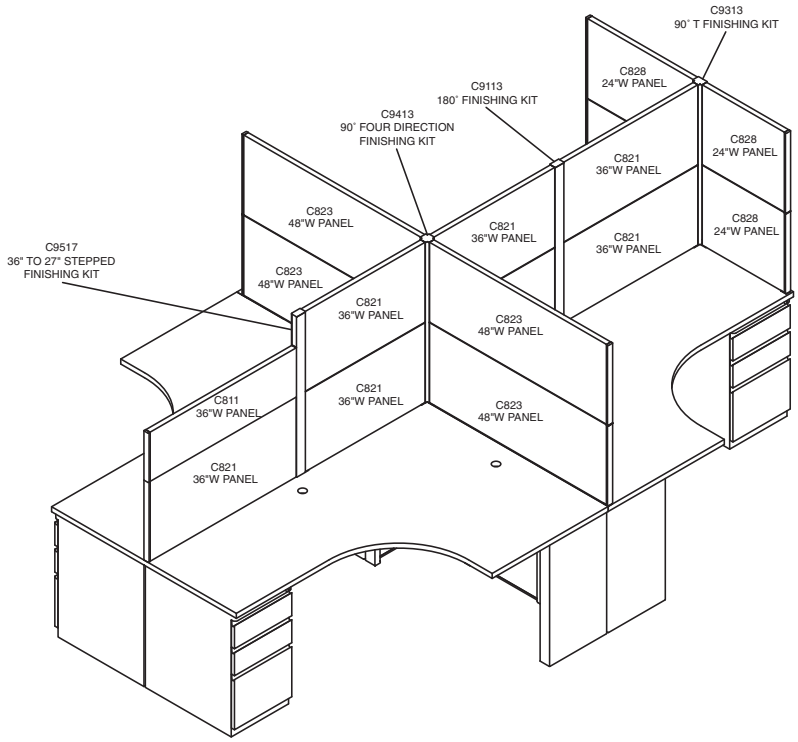

Stackable Privacy Panels are mounted to the worksurface and are available in either 9"H or 18"H. Provides numerous privacy options. Can be stacked or ganged to create many unique combinations, requires finishing kits. Panel heights can be combined for three levels of privacy, either 18", 27" or 36"H only. Trim components are provided in matching T-mold colors of Black, Warm Gray, Taupe and Ice Gray. COM options available: Contact customer service for more information.

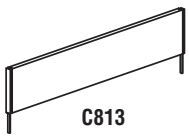
C813

• 9" High Stackable Fabric Panels

Model No.	Dimensions	Wt.	List Price
C818	9"H x 24"W x 1 1/4"D	7#	$456
C810	9"H x 30"W x 1 1/4"D	8#	$466
C819	9"H x 33"W x 1 1/4"D	9#	$478
C811	9"H x 36"W x 1 1/4"D	10#	$488
C812	9"H x 42"W x 1 1/4"D	11#	$500
C813	9"H x 48"W x 1 1/4"D	12#	$512

C823

• 18" High Stackable Fabric Panels

C828	18"H x 24"W x 1 1/4"D	15#	$553
C820	18"H x 30"W x 1 1/4"D	16#	$567
C829	18"H x 33"W x 1 1/4"D	17#	$582
C821	18"H x 36"W x 1 1/4"D	18#	$611
C822	18"H x 42"W x 1 1/4"D	19#	$631
C823	18"H x 48"W x 1 1/4"D	20#	$641

STACKABLE PRIVACY PANEL FINISHING KITS

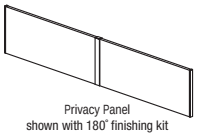

Privacy Panel shown with 180˚ finishing kit

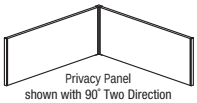

Privacy Panel shown with 90˚ Two Direction finishing kit

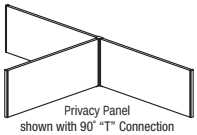

Privacy Panel shown with 90˚ "T" Connection finishing kit

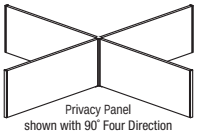

Privacy Panel shown with 90˚ Four Direction finishing kit

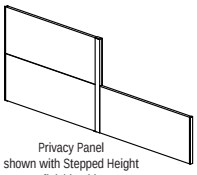

Privacy Panel shown with Stepped Height finishing kit

Model No.	Description	Wt.	List Price
C9111	180˚ Privacy Panel Finishing Kit - 18"H	2#	$53
C9112	180˚ Privacy Panel Finishing Kit - 27"H	3#	$70
C9113	180˚ Privacy Panel Finishing Kit - 36"H	4#	$90
C9211	90˚ Two direction Privacy Panel Finishing Kit - 18"H	2#	$57
C9212	90˚ Two direction Privacy Panel Finishing Kit - 27"H	3#	$76
C9213	90˚ Two direction Privacy Panel Finishing Kit - 36"H	4#	$92
C9311	90˚ "T" Connection Privacy Panel Finishing Kit - 18"H	3#	$65
C9312	90˚ "T" Connection Privacy Panel Finishing Kit - 27"H	4#	$84
C9313	90˚ "T" Connection Privacy Panel Finishing Kit - 36"H	5#	$100
C9411	90˚ Four direction Privacy Panel Finishing Kit - 18"H	3#	$72
C9412	90˚ Four direction Privacy Panel Finishing Kit - 27"H	4#	$92
C9413	90˚ Four direction Privacy Panel Finishing Kit - 36"H	5#	$111
C9512	Stepped Height Privacy Panel Finishing Kit - Stepped 18"–27"H	3#	$100
C9513	Stepped Height Privacy Panel Finishing Kit - Stepped 18"–36"H	4#	$120
C9517	Stepped Height Privacy Panel Finishing Kit - Stepped 27"–36"H	5#	$147

HOW TO ORDER CSII PRIVACY PANEL FABRIC SCREENS

FABRIC SCREEN OPTIONS

When ordering fabric screens, use the code at right to indicate your fabric option:

C 8 2 8 C R A

Product Code | Fabric Option

Any additional Guilford of Maine fabrics are available with a maximum 4-week production lead time for a nominal upcharge. Contact a Mayline customer service representative for more information.

Corporate Fabrics

Fabric Color	Order Code
Spinel	
Tiger Eye	STY
Sand Stone	SSS
Guilden	SGL
Lido	
Balboa	BAL
Heartland	LHL
Bryce Canyon	LBC
Mingle	
Crystal	MCT
Khaki	MHK
Biscuit	MBT
Cross Town	
Buff	CBF
Ray	CRA
Fieldstone	CFS
Anchorage	
Goose	AGS
Bailey	
Khaki	BKH
Hopscotch	
Fieldstone	HFS

Intertek

QUICK-SHIP

CSII RECEPTION

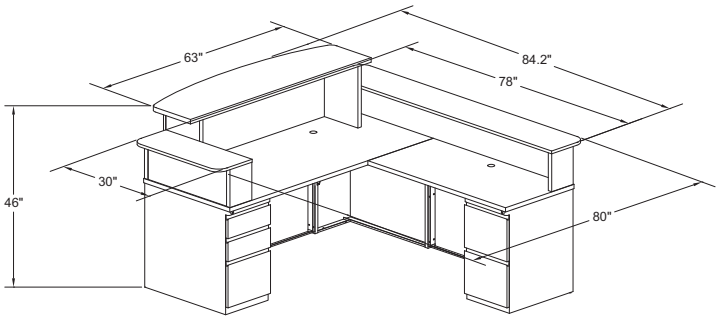

CSII RECEPTION DESK TYPICAL – CST27

Consists of:

QTY.	MODEL NO.	DESCRIPTION	LIST PRICE EACH
1	**C1371**	Rectangular Desk, 72" x 30" w/ 1 B/B/F	$1309
1	**C2433**	Return, 48" x 24" w/ 1 F/F	$1062
1	**CS2RC**	Reception Counter	$883
1	**CS2RS78**	Reception Auxiliary Counter 78"W	$588
1	**CS2RS30**	Reception Auxiliary Counter 30"W	$420

CST27 **TOTAL: $4263**

RECEPTION COUNTER

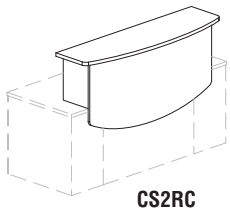

CS2RC

- For rectangular reception desk. To be used on any 72"W x 30"D CSII desk.
- Laminate design.
- 1 1/8" thick bowfront transaction counter.

Model No.	Description	Dimensions	Wt.	List Price
CS2RC	Reception Counter	63"W x 18"D x 17 3/8"H (29"H overall)	115#	$883

AUXILIARY COUNTER

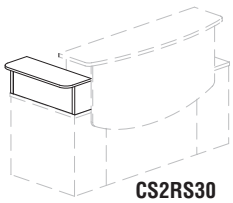

CS2RS30

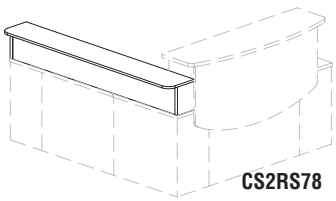

CS2RS78

- 30" counter to be used with reception counter on any 72"W x 30"D CSII desk.
- 78" counter to be used with reception counter on any 72"W x 30"D CSII desk and any 48"W CSII return.
- All laminate design.

Model No.	Description	Dimensions	Wt.	List Price
CS2RS30	30" Auxiliary Counter	30"W x 12"D x 10 3/4"H	30#	$420
CS2RS78	78" Auxiliary Counter	78"W x 12"D x 10 3/4"H	80#	$588

CSII RECEPTION DESK TYPICALS

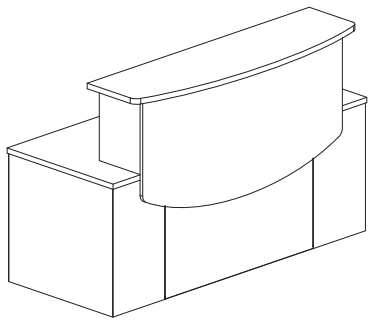

CSII TYPICAL #25

Consists of:

QTY.	MODEL NO.	DESCRIPTION	LIST PRICE EACH
1	**C1375**	Rect. Desk 72"W x 30"D with 1 B/B/F & 1 F/F Ped	$1814
1	**CS2RC**	Reception Counter	$883

CST25 **TOTAL: $2697**

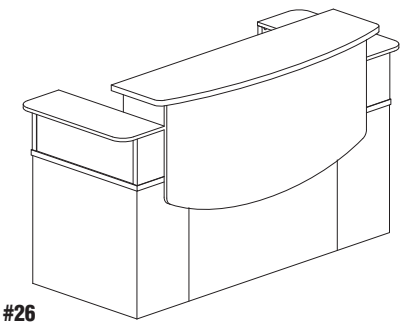

CSII TYPICAL #26

Consists of:

QTY.	MODEL NO.	DESCRIPTION	LIST PRICE EACH
1	**C1375**	Rect. Desk 72"W x 30"D w/1 B/B/F & 1 F/F Ped	$1814
1	**CS2RC**	Reception Counter	$883
1	**CS2RS30**	Reception Auxiliary Shelf 30"W	$420
1	**CS2RS30**	Reception Auxiliary Shelf 30"W	$420

CST26 **TOTAL: $3537**

CSII™ CONFERENCE TABLES

CSII CONFERENCE TABLES

Full-size conference tables with optional power and data modules designed for optional power and data access to operate computers and presentation equipment during meetings.

- All tables are 29"H overall.
- Three shapes of conference surfaces: Racetrack, Boat, and Rectangular.
- Table legs are constructed of 14 gauge steel and available in Mayline's standard black finish.
- Tops constructed of 1 1/8" thick high pressure laminate with t-mold edge.
- Tables can be ordered with black grommets.
- If ordering optional power module, table must be ordered with grommets.
- Slimline legs are 7"W and Premier legs are 13"W. Both have integrated cable channels within table legs.
- All tables standard with two legs, except for 120" with three legs.
- **Base Finish:** List prices shown are for black base finish. The bases can be finished in any other standard finish for a $50 list upcharge. Add a "C" suffix after the model number and specify standard finish.
- **Work surfaces available in the six e5 colors; see box on page 50 for details.**

Model No.	Description	Slimline Leg Grommets (+S) List Price	Slimline Leg No Grommets (+SN) List Price	Premier Leg Grommets (+P) List Price	Premier Leg No Grommets (+PN) List Price
R73R	72" x 36" Rectangular	$1298	$1203	$1392	$1354
R73B	72" x 36" Boat-Shaped	$1298	$1203	$1392	$1354
R73V	72" x 36" Racetrack	$1298	$1203	$1392	$1354
R84R	84" x 42" Rectangular	$1464	$1428	$1518	$1482
R84B	84" x 42" Boat-Shaped	$1464	$1428	$1518	$1482
R84V	84" x 42" Racetrack	$1464	$1428	$1518	$1482
R94R	96" x 48" Rectangular	$1500	$1464	$1555	$1519
R94B	96" x 48" Boat-Shaped	$1500	$1464	$1555	$1519
R94V	96" x 48" Racetrack	$1500	$1464	$1555	$1519
R95R	96" x 54" Rectangular	$1537	$1500	$1595	$1556
R95B	96" x 54" Boat-Shaped	$1537	$1500	$1595	$1556
R95V	96" x 54" Racetrack	$1537	$1500	$1595	$1556
R104R	108" x 48" Rectangular	$1710	$1674	$1785	$1746
R104B	108" x 48" Boat-Shaped	$1710	$1674	$1785	$1746
R104V	108" x 48" Racetrack	$1710	$1674	$1785	$1746
R105R	108" x 54" Rectangular	$1845	$1810	$1919	$1883
R105B	108" x 54" Boat-Shaped	$1845	$1810	$1919	$1883
R105V	108" x 54" Racetrack	$1845	$1810	$1919	$1883
R124R	120" x 48" Rectangular	$1977	$1939	$2050	$2013
R124B	120" x 48" Boat-Shaped	$1977	$1939	$2050	$2013
R124V	120" x 48" Racetrack	$1977	$1939	$2050	$2013
R125R	120" x 54" Rectangular	$2086	$2050	$2159	$2124
R125B	120" x 54" Boat-Shaped	$2086	$2050	$2159	$2124
R125V	120" x 54" Racetrack	$2086	$2050	$2159	$2124

Model No.	Description	List Price
SPM	Optional Power Module [includes RJ11-Cat 3 coupler (phone) and RJ45 coupler (data)] – 6' power cord.	$284

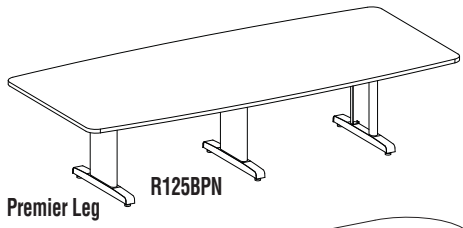

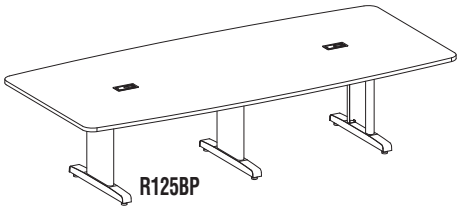

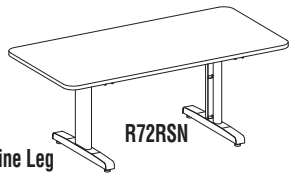

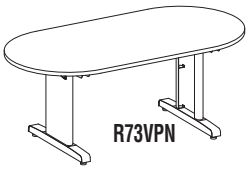

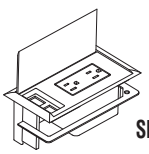

CSII TYPICALS

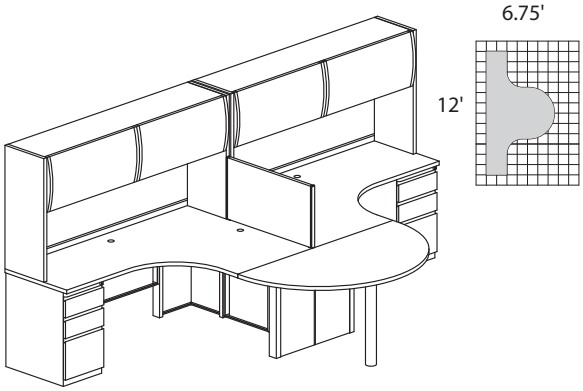

CSII TYPICAL #1

Consists of:

QTY.	MODEL NO.	DESCRIPTION	LIST PRICE EACH
1	**C343L1**	J Table 72"W x 48"D x 30"H Ret. Left w/One **B/B/F**	$1677
1	**C343R1**	J Table 72"W x 48"D x 30"H Ret. Right w/One **B/B/F**	$1677
1	**C829**	Stackable Fabric Panel 18"H x 33"W	$582
2	**C747**	Flipper Door Overhead Unit 72"W x 15"D x 36"H	$1156
1	**C515**	Team Table 60"W x 31"H	$699
2	**C867**	Fabric Tack Panel for Overhead 69 1/4"W x 17"H	$358

CST1 **TOTAL: $7664**

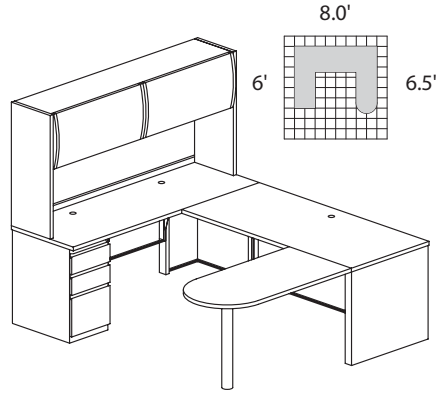

CSII TYPICAL #2

Consists of:

QTY.	MODEL NO.	DESCRIPTION	LIST PRICE EACH
1	**C1171**	Credenza 72"W x 24"D w/One **B/B/F**	$1288
1	**C2576**	Return 72"W x 30"D	$887
1	**C673**	Peninsula Table 48"W x 24"D	$667
1	**C747**	Flipper Door Overhead Unit 72"W x 15"D x 36"H	$1156
1	**C867**	Fabric Tack Panel for Overhead 69 1/4"W x 17"H	$358

CST2 **TOTAL: $4357**

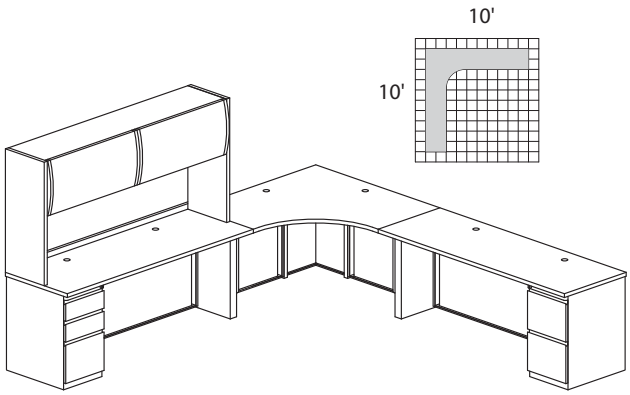

CSII TYPICAL #3

Consists of:

QTY.	MODEL NO.	DESCRIPTION	LIST PRICE EACH
1	**C542**	Corner Desk 24"D x 42"W x 42"W x 24"D	$1133
1	**C2471**	Return 72"W x 24"D w/One **B/B/F**	$1253
1	**C2473**	Return 72"W x 24"D w/One **F/F**	$1253
1	**C747**	Flipper Door Overhead Unit 72"W x 15"D x 36"H	$1156
1	**C867**	Fabric Tack Panel for Overhead 69 1/4"W x 17"H	$358

CST3 **TOTAL: $5153**

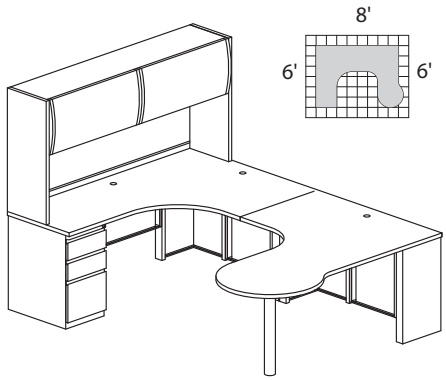

CSII TYPICAL #4

Consists of:

QTY.	MODEL NO.	DESCRIPTION	LIST PRICE EACH
1	**C343R1**	J Table 72"W x 48"D x 30"H Ret. Right w/One **B/B/F**	$1677
1	**C483L**	P Table 72"W x 48"D x 30"H Ret. Left w/Conference End	$1333
1	**C747**	Flipper Door Overhead Unit 72"W x 15"D x 36"H	$1156
1	**C867**	Fabric Tack Panel for Overhead 69 1/4"W x 17"H	$358

CST4 **TOTAL: $4525**

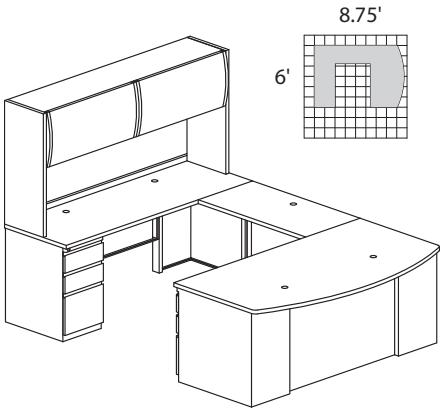

CSII TYPICAL #5

Consists of:

QTY.	MODEL NO.	DESCRIPTION	LIST PRICE EACH
1	**C1971**	Bowfront Desk 72"W x 39"D w/ One **B/B/F**	$1480
1	**C282T**	Straight Bridge 42"W x 21"D	$384
1	**C1171**	Credenza 72"W x 24"D w/ One **B/B/F**	$1288
1	**C747**	Flipper Door Overhead Unit 72"W x 15"D x 36"H	$1156
1	**C867**	Fabric Tack Panel for Overhead 69 1/4"W x 17"H	$358

CST5 **TOTAL: $4666**

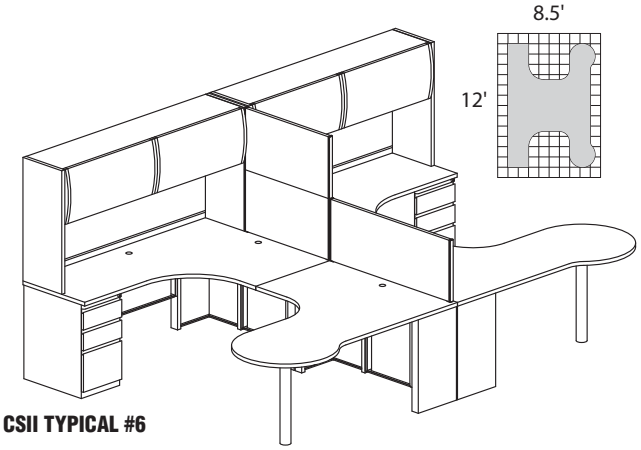

CSII TYPICAL #6

Consists of:

QTY.	MODEL NO.	DESCRIPTION	LIST PRICE EACH
1	**C343L1**	J Table 72"W x 48"D x 30"H Ret. Left w/ One **B/B/F**	$1677
1	**C343R1**	J Table 72"W x 48"D x 30"H Ret. Right w/ One **B/B/F**	$1677
1	**C483L**	P Table 72"W x 48"D x 30"H Ret. Left w/ Conf. End	$1333
1	**C483R**	P Table 72"W x 48"D x 30"H Ret. Right w/ Conf. End	$1333
2	**C747**	Flipper Door Overhead Units 72"W x 15"D x 36"H	$1156
2	**C867**	Fabric Tack Panels for Overhead 69 1/4"W x 17"H	$358
4	**1505TL**	Optional Task Lights	$314
2	**C829**	Stackable Fabric Panels 33"W x 18"H	$582
1	**C823**	Stackable Fabric Panel 48"W x 18"H	$641
1	**C9513**	Stepped Height Privacy Panel Finishing Kit	$120

CST6 **TOTAL: $12229**

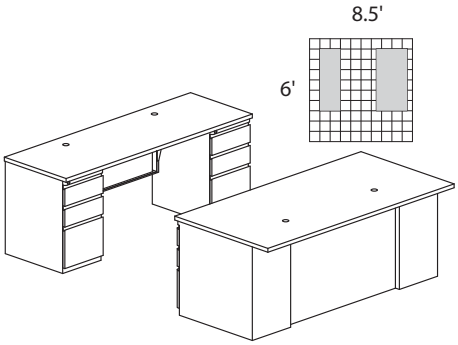

CSII TYPICAL #7

Consists of:

QTY.	MODEL NO.	DESCRIPTION	LIST PRICE EACH
1	**C1675**	Desk 72"W x 36"D w/One **B/B/F** and One **F/F**	$1882
1	**C1172**	Credenza 72"W x 24"D w/Two **B/B/F**	$1779

CST7 **TOTAL: $3661**

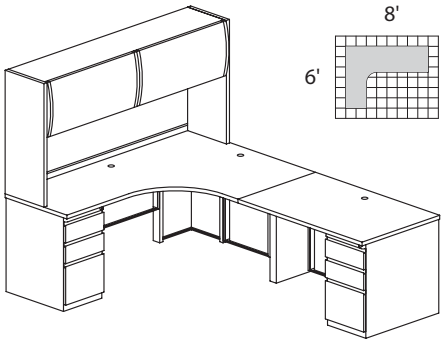

CSII TYPICAL #8

Consists of:

QTY.	MODEL NO.	DESCRIPTION	LIST PRICE EACH
1	**C343R1**	J Table 72"W x 48"D x 30" Ret. Right w/ One **B/B/F**	$1677
1	**C2531**	Return 48"W x 30"D w/ One **B/B/F**	$1120
1	**C747**	Flipper Door Overhead Unit 72"W x 15"D x 36"H	$1156
1	**C867**	Fabric Tack Panel for Overhead 69 1/4"W x 17"H	$358

CST8 **TOTAL: $4312**

67

CSII TYPICALS

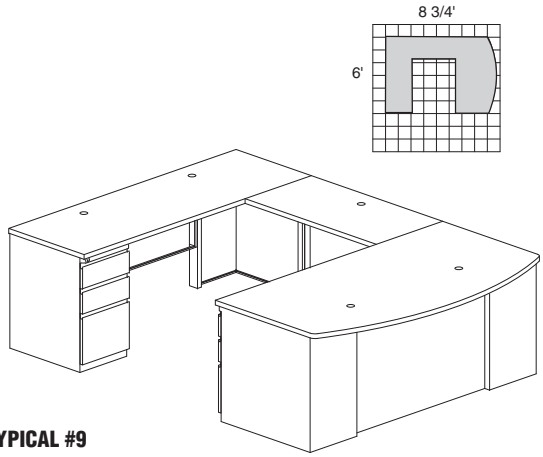

CSII TYPICAL #9

Consists of:

QTY.	MODEL NO.	DESCRIPTION	LIST PRICE EACH
1	**C1971**	Bowfront Desk 72"W x 39"D w/One **B/B/F**	$1480
1	**C1171**	Credenza 72"W x 24"D w/One **B/B/F**	$1288
1	**C282T**	Straight Bridge 42"W x 24"D	$384

CST9 **TOTAL: $3152**

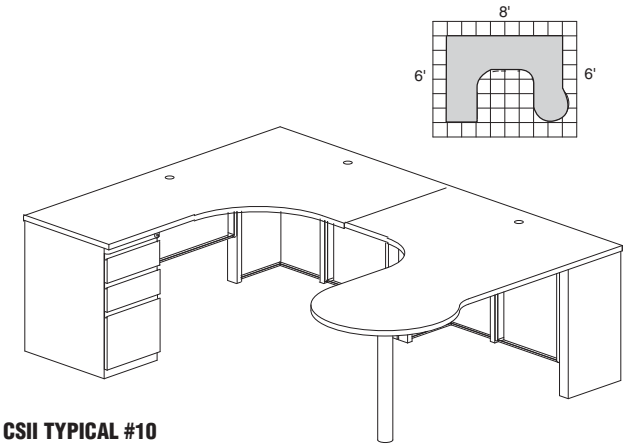

CSII TYPICAL #10

Consists of:

QTY.	MODEL NO.	DESCRIPTION	LIST PRICE EACH
1	**C343R1**	J Table 72"W x 48"D x 30"D Ret. Right w/One **B/B/F**	$1677
1	**C483L**	P Table 72"W x 48"D x 30"D Ret. Left w/Conf. End	$1333

CST10 **TOTAL: $3011**

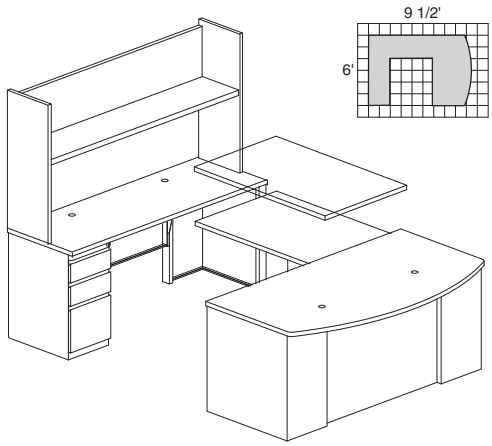

CSII TYPICAL #14

Consists of:

QTY.	MODEL NO.	DESCRIPTION	LIST PRICE EACH
1	**C1971**	Bowfront Desk 72"W x 39"D w/One **B/B/F**	$1480
1	**C1171**	Credenza 72"W x 24"D w/One **B/B/F**	$1288
1	**C48A**	Height Adjustable Bridge 48"W x 24"D	$2134
1	**C777**	Overhead Open Shelf 72"W x 14"D x 36"H	$655
1	**C867**	Fabric Tack Panel for Overhead 69"W x 1/2"D x 17"H	$358

CST14 **TOTAL: $5916**

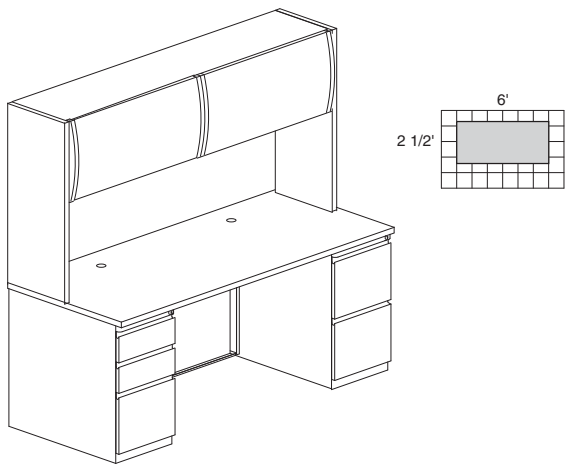

CSII TYPICAL #18

Consists of:

QTY.	MODEL NO.	DESCRIPTION	LIST PRICE EACH
1	**C1375**	Desk 72"W x 30"D w/One **B/B/F** and One **F/F**	$1814
1	**C747**	Flipper Door Overhead Unit 72"W x 15"D x 36"H	$1156
1	**C867**	Fabric Tack Panel for Overhead 69"W x 1/2"D x 17"H	$358

CST18 **TOTAL: $3328**

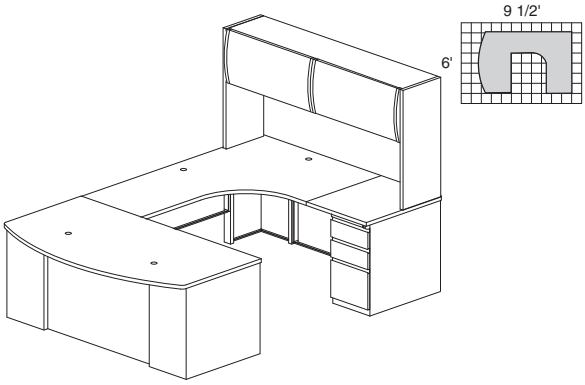

CSII TYPICAL #19

Consists of:

QTY.	MODEL NO.	DESCRIPTION	LIST PRICE EACH
1	**C1971**	Bowfront Desk 72"W x 39"D w/One **B/B/F**	$1480
1	**C343R6**	J Table 72"W x 48"D x 30"D Return Right	$1319
1	**C2581**	Return 24"W x 30"D w/One **B/B/F**	$976
1	**C747**	Flipper Door Overhead Unit 72"W x 15"D x 36"H	$1156
1	**C867**	Fabric Tack Panel for Overhead 69"W x 1/2"D x 17"H	$358

CST19 **TOTAL: $5289**

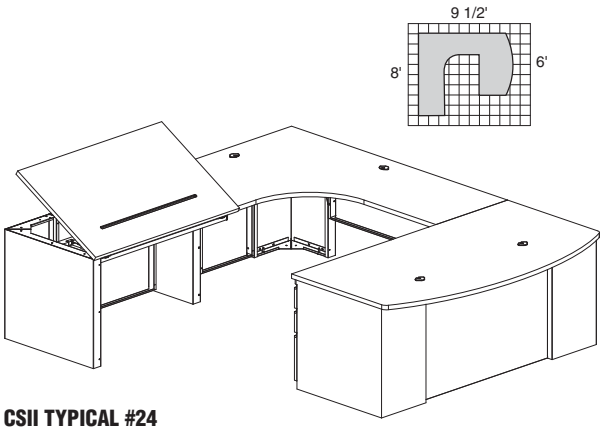

CSII TYPICAL #24

Consists of:

QTY.	MODEL NO.	DESCRIPTION	LIST PRICE EACH
1	**C1971**	Bowfront Desk 72"W x 39"D w/One **B/B/F**	$1480
1	**C343L6**	J Table 72"W x 48"D x 30"D Return Left	$1319
1	**C48TR**	Tilt Top Return Table 48"W x 30"D	$1190

CST24 **TOTAL: $3989**

COMMUNICATION STATION® FREESTANDING WORKTABLES

FREESTANDING WORKTABLES

Select Communication Station Free Standing Worktables for stand-alone applications are available
Please refer back to the CSII section for all desking accessories and storage features. There is one wire management grommet at each end of 42", 48", 60" and 72" wide worktables and a wire port in each leg upright. Modesty panel included. Legs are universal, left and right.

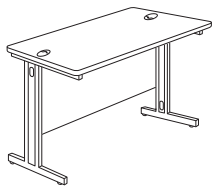

24" deep worktables—desk height

Model No.	Dimensions	Wt.	List Price
243029	30"W x 24"D x 29 1/2"H	56#	$695
243629	36"W x 24"D x 29 1/2"H	62#	$738
244829	48"W x 24"D x 29 1/2"H	76#	$853
246029	60"W x 24"D x 29 1/2"H	91#	$965
247229	72"W x 24"D x 29 1/2"H	107#	$1081

** No grommet on 30" and 36" widths. 30" wide worktables will not accept any keyboard options*

CORNER UNITS

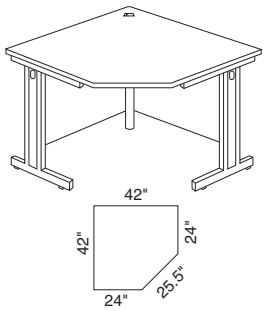

Corner units can be used as freestanding worktables or as part of a larger configuration. Connecting brackets included. Grommet is provided at rear of unit. Modesty panels are standard.

Corner Units for 24" Deep Workstations

Model No.	Dimensions	Wt.	List Price
242229	42"W x 24"D x 29 1/2"H	87#	$1284

PEDESTALS

- Full width "J" style pulls.
- Full extension ball bearing slides.
- Locks standard.
- Leveling glides have 5/8" of adjustability.
- Supports letter and legal file widths.
- Unique recessed base design allows casters to be added without adding additional height to the pedestal.

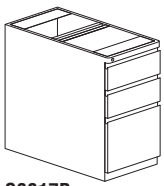

C8817B

C8817F

Model No.	Dimensions	Wt.	List Price
C8817B	15"W x 17 1/2"D x 28"H - **B/B/F**	50#	$596
C8817F	15"W x 17 1/2"D x 28"H - **F/F**	48#	$596
C8817M	17"D - Mobile Kit	28#	$83

TRANSACTION™ SERIES DESKING

Sleek outside, smart inside, TransAction is a system that does it all. It offers basic benching for teams on the go, personalized workstations that provide privacy and focus, extreme technology options for applications such as trading floors and even upscale multi-media conference rooms. An easy to specify and assemble starter/adder system for single- or dual-sided workstations makes TransAction an ideal solution for the office environment that needs to maximize space and be flexible enough for a variety of users. TransAction has real style, flexibility and a price point that will appeal to any business.

WORKSTATIONS

29.5" Surface height. Depth – 30" single-sided; 60" dual-sided. Standard widths 48", 60" and 72" wide. Standard workstation consists of work surfaces with or without access panels, a beam and trough, leg panels (starter unit – two end legs with 2 outer and 2 inner panels; adder – one leg with two inner panels). New 120 Degree/3 Workstation Pod now available. Trough power kits attach to infeed cables that exit the system through the bottom of the inner leg panel to the floor. Leg panels, trough and beam are made of painted steel. **Available in all Mayline Corporate paint finishes including Tech Silver.**

WORK SURFACES AND LEG PANEL INSERT

1 1/8" High-pressure laminate surfaces with a PVC knife front edge T-mold and 3mm side edging. Leg panel laminate insert is a thin layer of laminate glued to steel leg. **Available in over 600 HPL patterns with coordinating T-mold or 3mm edging.**

STORAGE

Attached non-handed returns in 42" or 48" widths are supported by pedestals or two-drawer lateral files. Box-Box-File or File-File pedestals and lateral files are painted steel available in all Mayline Corporate finishes. Pencil drawers can be added to each workstation, in black only. Freestanding pedestals can be mobilized for users that share storage or are only in the office occasionally in shared workstations. Limited color selection. A full line of lateral files or bookcases can be added to a work environment to provide additional freestanding storage. **Available in all Mayline Corporate paint finishes including Silver.**

TECHNOLOGY ACCESSORIES

TransAction features a complete system for flat screen displays including sleek and functional aluminum monitor poles and monitor support arms in single- and dual-extensions. The system includes pole, support arms, and wire management that are bolted to the workstation beam. Up to eight monitors can be mounted to the pole in various configurations using the support arms. Though designed as part of the TransAction product line these accessories can be bolted to any work surface. We also offer CPU holders and keyboard support options.

PANELS AND SCREENS

Eco-friendly tackable fabric panels available as standard in our corporate fabrics. Painted steel mounting brackets bolt the panels to the center beam and anti-skid tape to the front of the work surface. Acrylic screens also available as standard in frosted Green Crystal Ice acrylic with flame polished edges. Acrylic screens are attached with brushed silver zinc brackets to the beam. Both panels and screens can be used to delineate individual work areas or provide minimal privacy. Additional fabrics or acrylic colors in a variety of designs are available at additional fees and longer lead times.

Power Components: Preconfigured power kits as well as power feeds are available for TransAction to make your job easier. Special requests can also be addressed with additional lead time and fees required. **Production lead time for power components is 3 weeks.**

TRANSACTION™ DESKING

DUAL-SIDED WORKSTATIONS

Standard:

- Easy starter/adder system.
- A starter unit can be a free standing dual-sided work space.
- Sturdy welded steel beam and trough construction.
- Trough provides space for power and data management.
- Units can support attached pedestals, returns, keyboard trays, pencil drawers and CPU holders.
- Two Work Surfaces (back-to-back): 48", 60", or 72"W/ overall depth of 60" with or without access panels.
- Leg Assembly: Two for Starter, one for Adder.
- Adders can be added to the left or right of the Starter.
- Beam also supports above surface monitor supports and privacy partitions.
- Trough Access Panels optional – Suffix "N" designates without access panels.
- All attachment hardware included.
- Finishes – refer to page 71.

DUAL-SIDED WITHOUT ACCESS PANELS

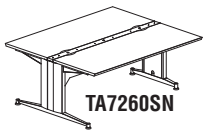
TA7260SN

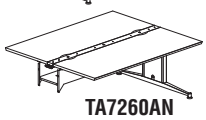
TA7260AN

Model No.	Description	Wt.	List Price
TA4860SN	48"W x 60"D x 29.5"H Starter w/o access panels	248#	$3705
TA6060SN	60"W x 60"D x 29.5"H Starter w/o access panels	253#	$3968
TA7260SN	72"W x 60"D x 29.5"H Starter w/o access panels	278#	$4224
TA4860AN	48"W x 60"D x 29.5"H Adder w/o access panels	198#	$2834
TA6060AN	60"W x 60"D x 29.5"H Adder w/o access panels	223#	$3175
TA7260AN	72"W x 60"D x 29.5"H Adder w/o access panels	248#	$3363

DUAL-SIDED WITHOUT ACCESS PANELS WITH SURFACE POWER/DATA OPTIONS

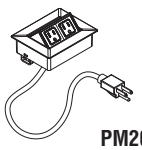
PM20

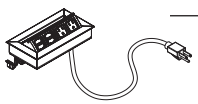
PM22

Model No.	Description	Option (Suffix)	Wt.	List Price
PM20	Power Module with 2 Power Outlets (Black only) and cutout	1	2#	$305
PM22	Power and Data Surface Module with 2 Power and 2 Data Outlets (Silver only)	2	4#	$464

Order Example: TA4860SN1 (See module options above)
48" x 60" starter without access panels includes (1) PM20 module and cutout in surface on each side of dual workstation.

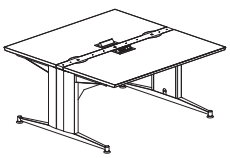
TA6060SN2

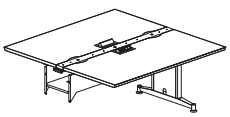
TA6060AN2

Model No.	Description	Wt.	List Price
TA4860SN1	48"W x 60"D x 29.5"H Starter w/o access panels/with (2) PM20 and cutouts	252#	$4381
TA6060SN1	60"W x 60"D x 29.5"H Starter w/o access panels/with (2) PM20 and cutouts	257#	$4644
TA7260SN1	72"W x 60"D x 29.5"H Starter w/o access panels/with (2) PM20 and cutouts	282#	$4900
TA4860SN2	48"W x 60"D x 29.5"H Starter w/o access panels/with (2) PM22 and cutouts	256#	$4672
TA6060SN2	60"W x 60"D x 29.5"H Starter w/o access panels/with (2) PM22 and cutouts	261#	$4936
TA7260SN2	72"W x 60"D x 29.5"H Starter w/o access panels/with (2) PM22 and cutouts	286#	$5192
TA4860AN1	48"W x 60"D x 29.5"H Adder w/o access panels/with (2) PM20 and cutouts	202#	$3509
TA6060AN1	60"W x 60"D x 29.5"H Adder w/o access panels/with (2) PM20 and cutouts	227#	$3851
TA7260AN1	72"W x 60"D x 29.5"H Adder w/o access panels/with (2) PM20 and cutouts	252#	$4039
TA4860AN2	48"W x 60"D x 29.5"H Adder w/o access panels/with (2) PM22 and cutouts	206#	$3802
TA6060AN2	60"W x 60"D x 29.5"H Adder w/o access panels/with (2) PM22 and cutouts	231#	$4024
TA7260AN2	72"W x 60"D x 29.5"H Adder w/o access panels/with (2) PM22 and cutouts	256#	$4330

DUAL-SIDED WITH ACCESS PANELS

For access panel preconfigured power kits, see page 65.

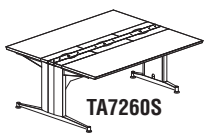
TA7260S

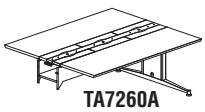
TA7260A

Model No.	Description	Wt.	List Price
TA4860S	48"W x 60"D x 29.5"H Starter w/ access panels	248#	$4172
TA6060S	60"W x 60"D x 29.5"H Starter w/ access panels	253#	$4553
TA7260S	72"W x 60"D x 29.5"H Starter w/ access panels	278#	$4781
TA4860A	48"W x 60"D x 29.5"H Adder w/ access panels	198#	$3320
TA6060A	60"W x 60"D x 29.5"H Adder w/ access panels	223#	$3771
TA7260A	72"W x 60"D x 29.5"H Adder w/ access panels	248#	$3965

SINGLE-SIDED WORKSTATIONS

Standard:

- Easy starter/adder system.
- A starter unit can be a freestanding single-sided work space.
- Sturdy welded steel beam and trough construction.
- Trough provides space for power and data management.
- Units can support attached pedestals, returns, keyboard trays, pencil drawer, and CPU holders.
- Trough Access Panels optional - Suffix “N” designates without access panels.
- Finishes – refer to page 71.
- Leg Assembly: Two for Starter, one for Adder.
- Single-sided adders can only be added to the right side of the starter.
- Beam also supports above surface monitor supports and privacy partitions.
- Legs provide vertical cable routing from floor-to-trough.
- All attachment hardware included.
- Work Surfaces are available in 48", 60", or 72" W/ overall depth of 30" with or without access panels.

SINGLE-SIDED WITHOUT ACCESS PANELS

TA7230SN

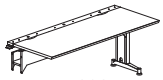
TA7230AN

Model No.	Description	Wt.	List Price
TA4830SN	48"W x 30"D x 29.5"H Starter w/o access panels	156#	$2824
TA6030SN	60"W x 30"D x 29.5"H Starter w/o access panels	169#	$3089
TA7230SN	72"W x 30"D x 29.5"H Starter w/o access panels	182#	$3227
TA4830AN	48"W x 30"D x 29.5"H Adder w/o access panels	140#	$2117
TA6030AN	60"W x 30"D x 29.5"H Adder w/o access panels	153#	$2327
TA7230AN	72"W x 30"D x 29.5"H Adder w/o access panels	164#	$2445

SINGLE-SIDED WITHOUT ACCESS PANELS WITH SURFACE POWER/DATA OPTIONS

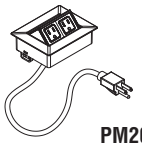
PM20

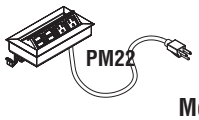
PM22

Model No.	Description	Option (Suffix)	Wt.	List Price
PM20	Power Module with 2 Power Outlets (Black) and cutout	1	2#	$305
PM22	Power and Data Surface Module with 2 Power and 2 Data Outlets (Silver only)	2	4#	$464

Order Example: TA4830SN1 (See module options above)
48" x 30" starter without access panels includes (1) PM20 module and cutout in surface on each side of dual workstation.

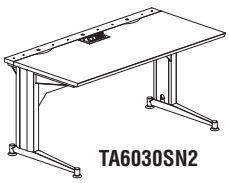
TA6030SN2

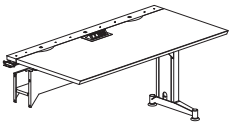
TA6030AN2

Model No.	Description	Wt.	List Price
TA4830SN1	48"W x 30"D x 29.5"H Starter w/o access panels/with (1) PM20 and cutouts	160#	$3162
TA6030SN1	60"W x 30"D x 29.5"H Starter w/o access panels/with (1) PM20 and cutouts	173#	$3427
TA7230SN1	72"W x 30"D x 29.5"H Starter w/o access panels/with (1) PM20 and cutouts	186#	$3566
TA4830SN2	48"W x 30"D x 29.5"H Starter w/o access panels/with (1) PM22 and cutouts	164#	$3308
TA6030SN2	60"W x 30"D x 29.5"H Starter w/o access panels/with (1) PM22 and cutouts	177#	$3573
TA7230SN2	72"W x 30"D x 29.5"H Starter w/o access panels/with (1) PM22 and cutouts	190#	$3711
TA4830AN1	48"W x 30"D x 29.5"H Adder w/o access panels/with (1) PM20 and cutouts	144#	$2455
TA6030AN1	60"W x 30"D x 29.5"H Adder w/o access panels/with (1) PM20 and cutouts	157#	$2665
TA7230AN1	72"W x 30"D x 29.5"H Adder w/o access panels/with (1) PM20 and cutouts	168#	$2784
TA4830AN2	48"W x 30"D x 29.5"H Adder w/o access panels/with (1) PM22 and cutouts	148#	$2601
TA6030AN2	60"W x 30"D x 29.5"H Adder w/o access panels/with (1) PM22 and cutouts	161#	$2811
TA7230AN2	72"W x 30"D x 29.5"H Adder w/o access panels/with (1) PM22 and cutouts	172#	$2929

SINGLE-SIDED WITH ACCESS PANELS

For access panel preconfigured power kits, see page 65.

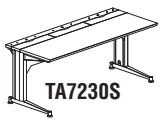
TA7230S

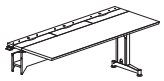
TA7230A

Model No.	Description	Wt.	List Price
TA4830S	48"W x 30"D x 29.5"H Starter w/ access panels	156#	$3017
TA6030S	60"W x 30"D x 29.5"H Starter w/ access panels	169#	$3380
TA7230S	72"W x 30"D x 29.5"H Starter w/ access panels	182#	$3537
TA4830A	48"W x 30"D x 29.5"H Adder w/ access panels	140#	$2310
TA6030A	60"W x 30"D x 29.5"H Adder w/ access panels	153#	$2617
TA7230A	72"W x 30"D x 29.5"H Adder w/ access panels	164#	$2754

TRANSACTION™ 120 DEGREE 3-POD WORKSTATION

TransAction 120 Degree Workstation unit provides three roomy work units for individuals who require more surface space yet need to be part of a collaborative work unit. Angled acrylic panels divide workspaces visually while allowing for communication among team members. Optional storage towers add a place to put personal and work items without cluttering the work surface.

- Three person workstation pod with access panels for power and data.
- Same beam and trough construction as rectangular modular TransAction.
- Work surfaces are 30" deep and curve in a 120-degree angle.
- Monitor posts can be located on the center core or along the beam between workstations. All attachment hardware included. Units can support attached pedestals, keyboard trays, pencil drawers, and CPU holders. Available in all Mayline Corporate colors, and HPL with knife-edge trim.
- Locks keyed alike

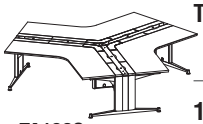
TA120S

Model No.	Description	Wt.	List Price
TA120S	3 workstations each 30"D x 102"W x 29 1/2"H Joined with a center core that can accommodate an optional monitor post. Tops with access panels to trough.	628#	$10675

TAAP5418D

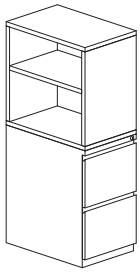
TAST51LF

120 DEGREE ACCESSORIES/OPTIONS

Model No.	Description	Wt.	List Price Each
TAAP5418D	54" Acrylic Divider Panel 18"-10"H. 3 panels would be required to divide the work stations as shown.	12#	$665
TADC120S	Steel data access channel (in 3 sections)	24#	$445
TAMSP	Single post – 15"H x 3"Dia.	7 1/4#	$131
TAM2	Single-monitor arm support – dual extension* 3 arms would be required for a monitor support at each work station.	4 1/2#	$172
TAST51LF	Storage tower	90#	$1482
TAETKD60S	Power Kit – Starter 60"*		$598
TAETKD60A	Power Kit – Adder 60"* 2 Adder Kits would be required in 120 Degree work station.		$730
TAESC72	Hardwire Starter Cable*		$186

See Typical #7 (page 83) for example of 120 Degree with optional accessories.
* For drawings and more information for power technology accessories, see page 80 .

RETURNS

Standard:

- Used to create “L” return.
- Available in 42" and 48" widths.
- Three attached storage options – Box-Box-File or File-File pedestals or a 2-drawer lateral file.
- Returns are non-handed.
- No modesty panel.
- Must attach to workstation/ Not a freestanding unit.
- All attachment hardware included.
- Finishes – refer to page 71.

TA42RB

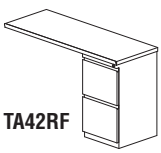
TA42RF

Model No.	Description	Wt.	List Price
TA42RB	42"W x 18"D x 29.5"H return with Pedestal/Box/Box/File	81#	$669
TA42RF	42"W x 18"D x 29.5"H return with Pedestal/File/File	79#	$648
TA48RB	48"W x 18"D x 29.5"H return with Pedestal/Box/Box/File	86#	$676
TA48RF	48"W x 18"D x 29.5"H return with Pedestal/File/File	84#	$653

TRANSACTION™ STORAGE

There are a variety of storage options to use with TransAction or other Mayline products. These range from standard height fixed and mobile pedestals and laterals to mobile pedestals and laterals with cushions for extra seating when needed. Storage towers and towers with wardrobe closets are also now available to match Mayline Corporate colors and configurations.

- Mayline "C" pedestals can be attached to TransAction workstations or mobile as required.
- Pedestals have "J" style pulls, full extension ball bearings and locks as standard.
- Support legal and letter filing widths.
- Unique recessed base design allows casters to be added without adding additional height to the pedestal.
- CSII 2-drawer lateral files are used in one return option.
- The complete line of CSII lateral files and bookcases can be added for freestanding storage options.
- Refer to page 48 for information and pricing.

C8817B

Model No.	Description	Wt.	List Price
C8817B	15"W x 17 1/2"D x 28"H **B/B/F**	50#	$596
C8817F	15"W x 17 1/2"D x 28"H **F/F**	48#	$596
C8817M	17"D – Mobile Kit	28#	$83
19400	Pencil Drawer – 21"W x 16"D x 2"H – Black only	4#	$91

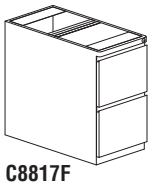
C8817F

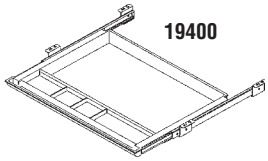
19400

TRANSACTION STORAGE

CUSHION MOBILE PEDESTALS

- Box/File mobile pedestal.
- Counterweight included for stability.
- 1 1/2" cushion attaches to full metal top with dual-lock strips.
- Full pull drawer fronts and top lock strip with handle.
- Black plastic casters (2 locking and 2 non-locking).
- File available in Mayline Corporate colors, including Tech Silver.
- Cushions available in Black (BL) or Gray (GY); for COM fabric, please contact Customer Service for additional price and lead times.

TACMP

Model No.	Description	Dimensions	Wt.	List Price
TACMP	Cushion Mobile Pedestal	23"H x 18 7/8"D x 15 1/4"W	60#	$973

CUSHION MOBILE FILE CENTER

- 1 1/2" cushions attached to full metal top with dual-lock strips.
- All drawers feature full extension slides.
- 2 box/1 file drawer configuration only.
- Full pull drawers with top lock strip.
- Black plastic casters (2 locking and 2 non-locking).
- File available in Mayline Corporate colors, including Tech Silver.
- Cushions available in Black (BL) or Gray (GY); for COM fabric, please contact Customer Service for additional price and lead times.

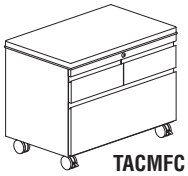
TACMFC

Model No.	Description	Dimensions	Wt.	List Price
TACMFC	Cushion Mobile File Center 2 box drawers/one file drawer	24 1/8"H x 18 3/8"D x 30 1/2"W	120#	$1750

BOOKCASE TOWER

- Storage unit that includes a bookcase and pedestal.
- Steel frame construction is welded and channels are formed in key areas for strength.
- Single adjustable shelf with a load capacity of 61 lbs.
- File/File and Box/Box/File drawer configurations available for tower on right or left side of workstation.
- Full pull drawers with top lock strip.
- All drawers feature full extension slides which include “anti-rebound” and “quick disconnect” features.
- Single key lock included.
- Towers include counterweight to meet ANSI-BIFMA standards for stability.
- Leveling glides allow for 1 5/8" adjustment.

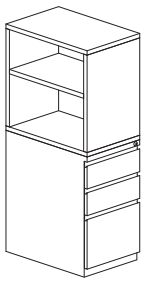

TAST51LB

Model No.	Description	Dimensions	Wt.	List Price
TAST51LB	Left facing bookcase/box/box/file ped	51 3/8"H x 23 1/2"D x 15 1/4"W	90#	$1432
TAST51LF	Left facing bookcase/file/file ped	51 3/8"H x 23 1/2"D x 15 1/4"W	85#	$1482
TAST51RB	Right facing bookcase/box/box/file ped	51 3/8"H x 23 1/2"D x 15 1/4"W	90#	$1432
TAST51RF	Right facing bookcase/file/file ped	51 3/8"H x 23 1/2"D x 15 1/4"W	85#	$1482

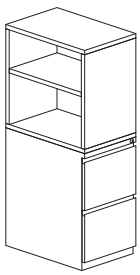

TAST51LF

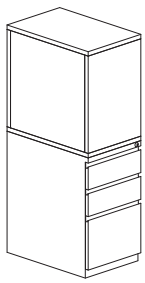

TAST51RB

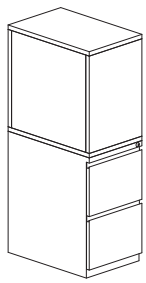

TAST51RF

TRANSACTION STORAGE

BOOKCASE WARDROBE TOWER

- Storage unit that includes a bookcase, wardrobe and pedestal.
- Steel frame construction is welded and channels are formed in key areas for strength.
- Single adjustable shelf with a load capacity of 61 lbs.
- File/File and Box/Box/File drawer configurations available for tower on right or left side of workstation.
- Full pull drawers with lock strip with handle.
- All drawers feature full extension slides which include “anti-rebound” and “quick disconnect” features.
- Tower includes two locks keyed alike.
- Towers include counterweight to meet ANSI-BIFMA standards for stability.
- Leveling glides allow for 1 5/8" adjustment.

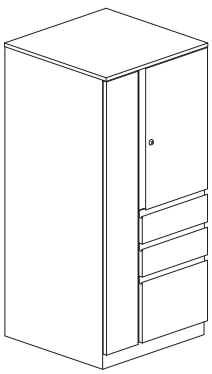

TAST51WLB

Model No.	Description	Dimensions	Wt.	List Price
TAST51WLB	Coat door left/box/box/file ped	51 3/8"H x 23 1/2"D x 23 1/2"W	162#	$2242
TAST51WLF	Coat door left/file/file ped	51 3/8"H x 23 1/2"D x 23 1/2"W	159#	$2165
TAST51WRB	Coat door right/box/box/file ped	51 3/8"H x 23 1/2"D x 23 1/2"W	162#	$2242
TAST51WRF	Coat door right/file/file ped	51 3/8"H x 23 1/2"D x 23 1/2"W	159#	$2165

TRANSACTION™ DESKING POWER OPTIONS

Standard Power Options:

- UL Recognized and CSA Certified Components.
- Convenient kits provide easy specifying.
- Additional options available upon special request to meet your requirements.
- Maximum of 80 receptacles per 4-circuit starter (10 dual-sided/20 single-sided); 8 receptacles per dual-sided block; 4 receptacles per single-sided block.
- It is the customer's responsibility to ensure that the use of electrical systems including the number of receptacles on a given circuit and connection to building power source, be in compliance with all electrical codes.

POWER INFEED OPTIONS

- All circuits rated for 20 AMPS and are energized; includes female connector, length of flex cable and box connector.
- Up to 10 power blocks per hardwire cable.

Model No.	Description	List Price
TAESC72	72" Hardwire Starter Cable	$186
TAESC108	108" Hardwire Starter Cable	$240
TAESC144	144" Hardwire Starter Cable	$294

TAESC72

DESKING POWER KITS

- All preconfigured power kits include (2) 8-wire 4-circuit double duplex single- or double-sided power blocks, appropriate length interconnecting cables, mounting brackets and simplex removal tools and brackets as needed for ease of layout and installation.
- Special order systems available upon request.

Model No.	Description	List Price
TAETKD48S	48" Double-Sided/Double Block Starter Kit	$567
TAETKD60S	60" Double-Sided/Double Block Starter Kit	$598
TAETKD72S	72" Double-Sided/Double Block Starter Kit	$616
TAETKD48A	48" Double-Sided/Double Block Adder Kit	$700
TAETKD60A	60" Double-Sided/Double Block Adder Kit	$730
TAETKD72A	72" Double-Sided/Double Block Adder Kit	$748
TAETKS48S	48" Single-Sided/Double Block Starter Kit	$404
TAETKS60S	60" Single-Sided/Double Block Starter Kit	$436
TAETKS72S	72" Single-Sided/Double Block Starter Kit	$454
TAETKS48A	48" Single-Sided/Double Block Adder Kit	$536
TAETKS60A	60" Single-Sided/Double Block Adder Kit	$568
TAETKS72A	72" Single-Sided/Double Block Adder Kit	$586

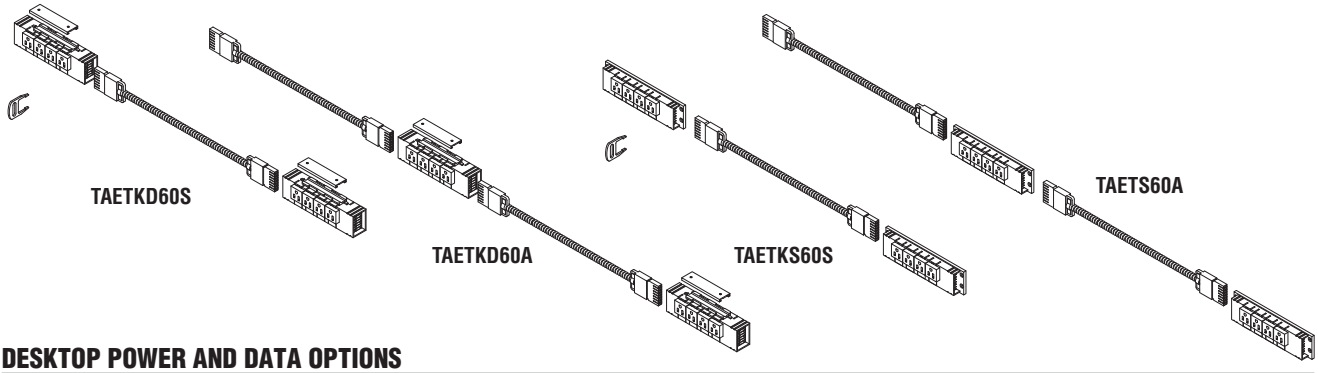

DESKTOP POWER AND DATA OPTIONS

Mayline's desktop power and data options easily install using cutting templates included with each module. Field cut and installed. For units including precut holes and power modules, see pages 72 and 73 for pricing.

Model No.	Description	Wt.	List Price
PM20	Power Module with 2 Power Outlets (Black)	2#	$305
PM22	Power and Data Module with 2 Power and 2 Data Outlets (Silver)	4#	$464

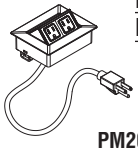

PM20

PM22

TRANSACTION™ DATA CHANNEL OPTION

TransAction Data Channels provide a separation between power and data in the desking trough.

- Available in single- and dual-sided starter and adder channels.
- 48" channels standard with two data openings; 60" and 72" channels standard with three openings.
- Blank face plates included for openings where telecom plates are not installed.
- Easy to install. May be added to existing TransAction installations.
- Channels standard in black finish only.
- **Telecom plates are not included in data channel price; must be ordered separately.**
- For telecom plate options, see page 79.

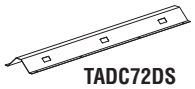
TADC72DS

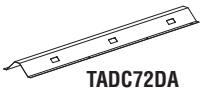
TADC72DA

DUAL-SIDED DATA CHANNELS

Model No.	Description	Wt.	List Price
TADC48DS	11"W x 42"D x 3 1/2"H Starter Channel.	6#	$178
TADC60DS	11"W x 54"D x 3 1/2"H Starter Channel.	8#	$190
TADC72DS	11"W x 66"D x 3 1/2"H Starter Channel.	9#	$202
TADC48DA	11"W x 46"D x 3 1/2"H Adder Channel.	7#	$178
TADC60DA	11"W x 58"D x 3 1/2"H Adder Channel.	8#	$190
TADC72DA	11"W x 70"D x 3 1/2"H Adder Channel.	10#	$202

TADC72SS

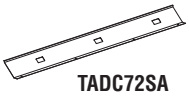
TADC72SA

SINGLE-SIDED DATA CHANNELS

Model No.	Description	Wt.	List Price
TADC48SS	7"W x 42"D x 1"H Starter Channel.	3#	$89
TADC60SS	7"W x 54"D x 1"H Starter Channel.	4#	$95
TADC72SS	7"W x 66"D x 1"H Starter Channel.	5#	$100
TADC48SA	7"W x 46"D x 1"H Adder Channel.	4#	$89
TADC60SA	7"W x 58"D x 1"H Adder Channel.	5#	$95
TADC72SA	7"W x 70"D x 1"H Adder Channel.	6#	$100

120 DEGREE DATA CHANNEL KIT

Model No.	Description	Wt.	List Price
TADC120S	3 Section dual-sided Data Channel 11"W x 54"D x 3 1/2"H Starter Channel.	23#	$445

INDIVIDUAL TELECOM PLATE OPTIONS

- Ten commonly used telecom connections are offered to complete the technology requirements of conference tables or TransAction desking data channel.
- Six telecom plate openings per conference table well.
- Two (48" channel) and three (60" and 72" channel) openings per side of data channel.
- Black only.
- Common Telecom Definitions:
  HDMI (High Definition Multi-Media Interface) – Used to stream video on devices such as televisions or Blu-Ray DVD players.
  15 pin HD VGA F/F (High Definition Video Graphics Array) – Used to stream video usually found on a laptop or projector.
  Mini Stereo Inline Audio Connection (also called a 1/8" phone jack or headphone jack) – Runs audio from computers and mp3 players.
  USB (Universal Serial Bus) – Connects computer peripherals such as mouse or keyboard to a computer.
- **Additional options available upon request.**

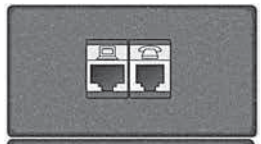

Model No.	Description	List Price
TAETP1	Telecom Plate with RJ11Cat3 Phone and RJ45 CAT6 Data	$119

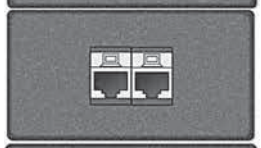

TAETP2	Telecom Plate with 2 RJ45 Cat6 Data	$157

TAETP3	Telecom Plate with 3 RJ45 Cat6 Data	$230

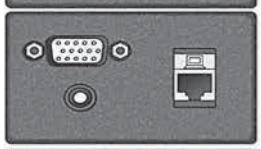

TAETP4	Telecom Plate with RJ45 Cat6 Data, Mini Stereo Inline, and 15 Pin HD, VGA F/F	$260

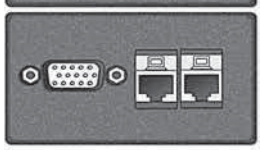

TAETP5	Telecom Plate with 2 RJ45 Cat6 Data and 15 :in HD VGA F/F	$283

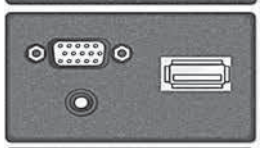

TAETP6	Telecom Plate with 1 HDMI F/F, 1 Mini Stereo Inline and 1 15 Pin, HD VGA F/F	$346

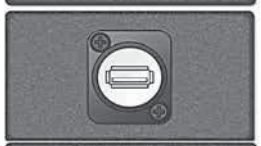

TAETP7	Telecom Plate with USB Inline	$67

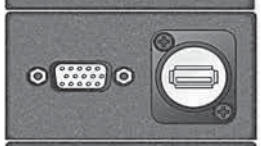

TAETP8	Telecom Plate with USB Inline and 15 Pin HD VGA F/F	$193

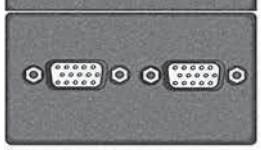

TAETP9	Telecom Plate with 2 - 15 Pin HD VGA F/F	$263

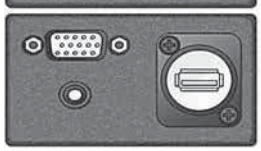

TAETP10	Telecom Plate with USB Inline, 15 Pin HD VGA F/F, and Mini Stereo Inline	$243

TRANSACTION™ DESKING ACCESSORIES

TECHNOLOGY ACCESSORIES

Mayline introduces a new line of flat screen monitor mounting system.

- Extruded aluminum posts with removable cap for easy access to mount monitor arms.
- User friendly posts and arms provide easy adjustments of heights and viewing angles on flat screen monitors.
- Monitor arm posts bolt securely to center beam.
- Multiple attachment locations available along the beam structure (square opening).
- TAM2 will support up to 8 monitor supports.
- Two available heights, 15"H and 29 1/2"H to meet needs for varying number and positions of monitors.
- Monitor arm supports attach easily to the post by sliding clamp down one of the post's vertical channels. positioning it at desired height and tightening at that position with an easy-to-use lever.
- Cable management and mounting hardware included.
- Mounts are only compatible with VESA compliant monitors using 100mm x 100mm or 75mm x 75mm mounting location and with a max weight of 18 lbs.
- Mounting System of posts and supports can be affixed to other product lines such as CSII, Height Adjustable Tables and TechWorks.

Model No.	Description	Wt.	List Price
TAMSP	Single Post – 15"H x 3" Diameter	7.25 #	$131
TAMDP	Dual Post – 29 1/2"H x 3" Diameter	5.5 #	$195
TAM2	Single Monitor Support – Dual 18 1/2" extension	4.5#	$172
19503TA	Combination keyboard/mouse platform 19"W x 8 1/4"D, 9"Dia. mouse platform	15#	$570
C894	CPU Holder – CPU width plus 3 1/2" x 16"D x CPU height plus 4 1/2"	20#	$318

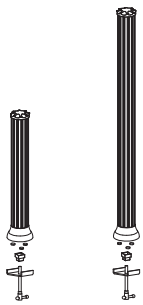

TAMSP **TAMDP**

TAM2

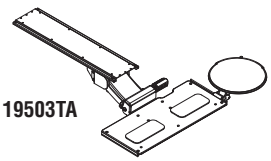

19503TA

Available in Black Only.

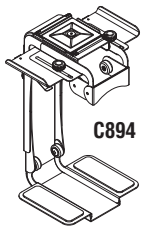

C894

ACRYLIC PRIVACY SCREENS

Standard:

- Stylish frosted screens with flame polished edges to give the appearance of glass.
- Standard in Green Crystal Ice Acrylic/frosted on both sides - other colors, shapes, and sizes available as specials with extended lead times.
- Standard lead time is 4 weeks.
- Screens available as space dividers and for limited privacy.
- Overall screen height with bracket 12 1/4".
- Left-to-Right Screens rectangular; Front-to-Back Divider Screens angle from 7 1/2" on front edges to 11 1/2" in the center.
- Zinc alloy brackets in satin silver included with screens.

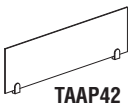

TAAP42

TAAP30D

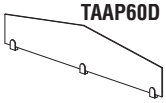

TAAP60D

Model No.	Description	Wt.	List Price
	Left-to-Right Screens*		
TAAP24	24"W x 1/4"D x 11 1/2"H Frosted Acrylic Screen	5#	$184
TAAP30	30"W x 1/4"D x 11 1/2"H Frosted Acrylic Screen	6#	$226
TAAP42	42"W x 1/4"D x 11 1/2"H Frosted Acrylic Screen	8#	$350
TAAP54	54"W x 1/4"D x 11 1/2"H Frosted Acrylic Screen	9#	$581
TAAP66	66"W x 1/4"D x 11 1/2"H Frosted Acrylic Screen	10#	$590
	**Screens attach to beam at multiple connection points with brackets*		
	Front-to- Back Divider Screens**		
TAAP30D	30"W x 1/4"D x 7 1/2" - 11 1/2"H Frosted Acrylic Divider Screen	6#	$235
TAAP60D	60"W x 1/4"D x 7 1/2" - 11 1/2"H Frosted Acrylic Divider Screen	10#	$557

***Center of screen attaches to beam/ front of screen utilizes anti-skid application on bottom of bracket – Does **NOT** attach to surface.*

FABRIC PRIVACY PANEL

Standard:

- Tackable eco-friendly divider panels.
- Left -to-Right and Front- to- Back panels available for division of space and moderate privacy.
- Uniquely styled painted-steel panel brackets included in appropriate numbers with each panel.
- Panels slide over support bracket and are bolted to the beam with one bracket while the front edge bracket is secured with non-skid tape (not attached to the work surface).
- Overall panel height when mounted on bracket – 13 1/2".
- Panel trimmed in 1/4" coordinating t-mold (default colors selected unless otherwise specified) – 5 standard colors including new Tech Silver.
- Panel lead times affected by fabric availability.
- Attachment hardware included.

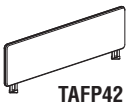
TAFP42

Model No.	Description	Wt.	List Price
	Left-to-Right Panels*		
TAFP24	24"W x 1"D x 11 1/2"H Fabric Panel w/T-mold	7#	$497
TAFP30	30"W x 1"D x 11 1/2"H Fabric Panel w/T-mold	9#	$533
TAFP42	42"W x 1"D x 11 1/2"H Fabric Panel w/T-mold	11#	$627
TAFP54	54"W x 1"D x 11 1/2"H Fabric Panel w/T-mold	13#	$735
TAFP66	66"W x 1"D x 11 1/2"H Fabric Panel w/T-mold	15#	$817

**Panels attach to beam at multiple connection points*

TAFP60D

	Front-to- Back Divider Panels**		
TAFP30D	30"W x 1"D x 11 1/2"H Fabric Divider Panel w/T-mold	9#	$608
TAFP60D	60"W x 1"D x 11 1/2"H Fabric Divider Panel w/T-mold	15#	$918

***Back of panel attaches to beam/ front of panel utilizes anti-skid application on foot- does NOT attach to surface.*

HOW TO ORDER TRANSACTION FABRIC PRIVACY PANELS

FABRIC PANEL OPTIONS

When ordering fabric panels, use the code at right to indicate your fabric option:

Any additional Guilford of Maine fabrics are available with a maximum 4-week production lead time for a nominal upcharge. Contact a Mayline customer service representative for more information.

T A F P 3 0 D C R A

Product Code — Fabric Option

T-Mold Options

Ice Gray ____
Warm Gray ____
Silver ____
Taupe ____
Black ____

Corporate Fabrics

Fabric Color	Order Code
Spinel	
Tiger Eye	STY
Sand Stone	SSS
Guilden	SGL
Lido	
Balboa	BAL
Heartland	LHL
Bryce Canyon	LBC
Mingle	
Crystal	MCT
Khaki	MHK
Biscuit	MBT

Fabric Color	Order Code
Cross Town	
Buff	CBF
Ray	CRA
Fieldstone	CFS
Anchorage	
Goose	AGS
Bailey	
Khaki	BKH
Hopscotch	
Fieldstone	HFS

TRANSACTION™ TYPICALS

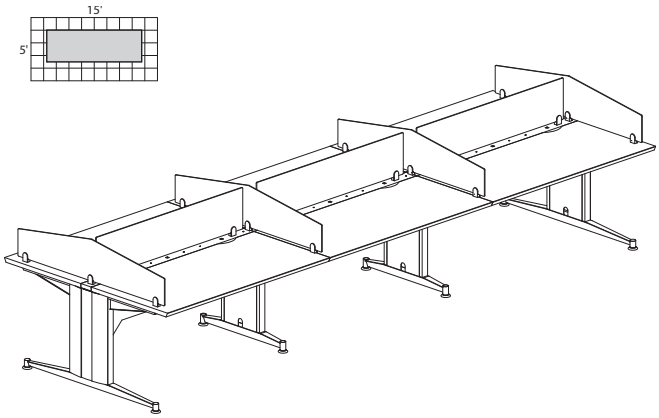

TRANSACTION TYPICAL #1

Consists of:

QTY.	MODEL NO.	DESCRIPTION	LIST PRICE EACH
1	**TA6060SN**	60"W x 60"D x 29"H Starter w/o access panels	$3968
2	**TA6060AN**	60"W x 60"D x 29"H Adder w/o access panels	$3175
3	**TAAP54**	54"W x 1/4"D x 11 1/2"H Frosted Acrylic Screen	$581
4	**TAAP60D**	60"W x 1/4"D x 7 1/2" - 11 1/2"H Frosted Acrylic Divider Screen	$557

TRANT1 **TOTAL: $14288**

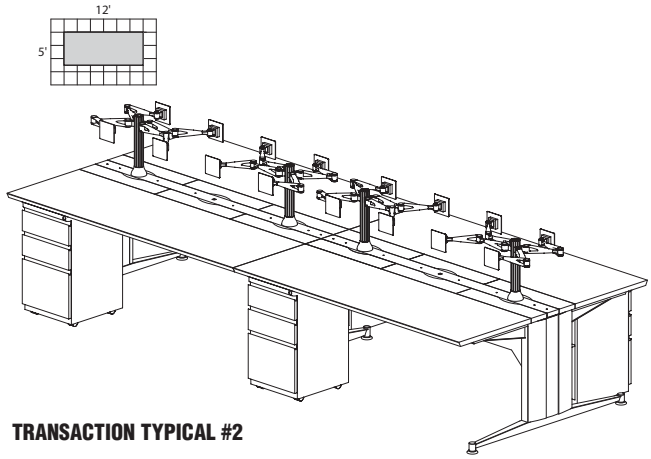

TRANSACTION TYPICAL #2

Consists of:

QTY.	MODEL NO.	DESCRIPTION	LIST PRICE EACH
1	**TA7260S**	72"W x 60"D x 29"H Starter w/access panels	$4781
1	**TA7260A**	72"W x 60"D x 29"H Adder w/access panels	$3965
4	**C8817B**	15"W x 17 1/2"D x 28"H B/B/F	$596
4	**TAMSP**	Single Post - 15"H x 3" Diameter	$131
16	**TAM2**	Dual Arm Monitor Support - 18 1/2" extension	$172

TRANT2 **TOTAL: $14305**

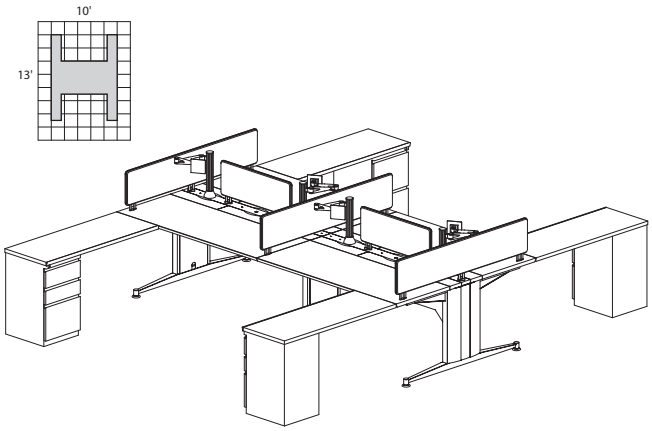

TRANSACTION TYPICAL #3

Consists of:

QTY.	MODEL NO.	DESCRIPTION	LIST PRICE EACH
1	**TA6060S**	60"W x 60"D x 29"H Starter w/access panels	$4553
1	**TA6060A**	60"W x 60"D x 29"H Adder w/access panels	$3771
4	**TA48RB**	48"W x 18"D x 29"H return with Pedestal/Box/Box/File	$676
2	**TAFP30**	30"W x 1"D x 11 1/2"H Fabric Panel w/T-mold	$533
3	**TAFP60D**	60"W x 1"D x 11 1/2" H Fabric Divider Panel w/T-mold	$918
4	**TAMSP**	Single Post - 15"H x 3" Diameter	$131
4	**TAM2**	Dual Arm Monitor Support - 18 1/2" extension	$172

TRANT3 **TOTAL: $16060**

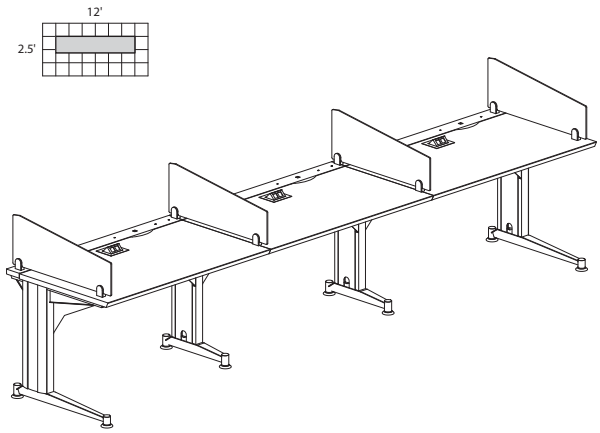

TRANSACTION TYPICAL #4

Consists of:

QTY.	MODEL NO.	DESCRIPTION	LIST PRICE EACH
1	**TA4830SN**	48"W x 30"D x 29"H Starter w/o access panels	$2824
2	**TA4830AN**	48"W x 30"D x 29"H Adder w/o access panels	$2117
3	**PM20**	Power Module with 2 Per Outlets (Black)	$305
4	**TAAP30D**	24"W x 1/4"D x 7 1/2" - 11 1/2" H Frosted Acrylic Divider Screen	$235

TRANT4 **TOTAL: $8876**

TRANSACTION™ SERIES TYPICALS

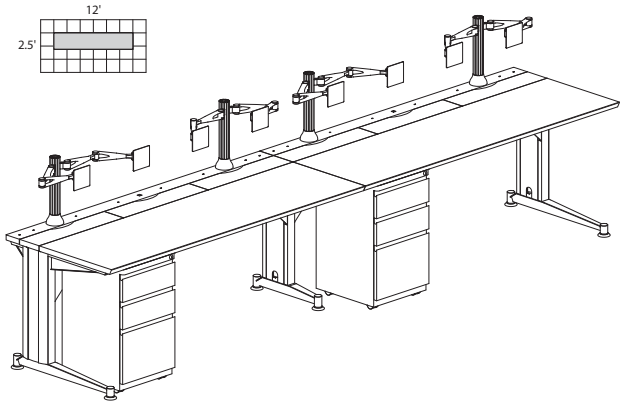

TRANSACTION TYPICAL #5

Consists of:

QTY.	MODEL NO.	DESCRIPTION	LIST PRICE EACH
1	**TA7230S**	72"W x 30"D x 29"H Starter w/access panels	$3537
1	**TA7230A**	72"W x 30"D x 29"H Adder w/access panels	$2754
2	**C8817B**	15"W x 17 1/2"D x 28"H B/B/F	$596
4	**TAMSP**	Single Post - 15"H x 3" Diameter	$131
8	**TAM2**	Dual Arm Monitor Support - 18 1/2" extension	$172

TRANT5 **TOTAL: $9332**

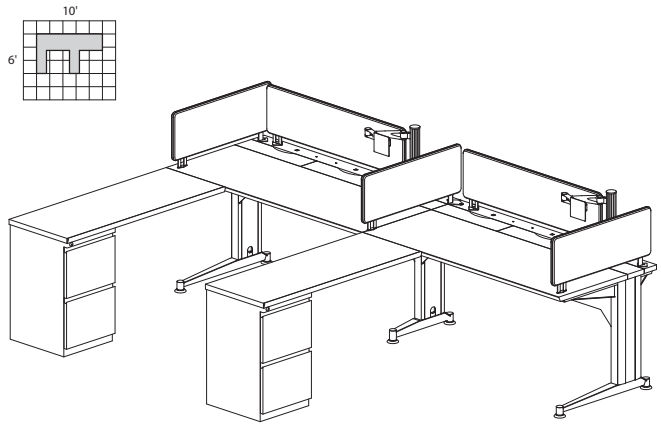

TRANSACTION TYPICAL #6

Consists of:

QTY.	MODEL NO.	DESCRIPTION	LIST PRICE EACH
1	**TA6030S**	60"W x 30"D x 29"H Starter w/access panels	$3380
1	**TA6030A**	60"W x 30"D x 29"H Adder w/access panels	$2617
2	**TA42RF**	42"W x 18"D x 29"H return with Pedestal/File/File	$648
3	**TAFP30D**	30"W x 1"D x 11 1/2" H Fabric Divider Panel w/T-mold	$608
2	**TAFP42**	42"W x 1"D x 11 1/2"H Fabric Panel w/T-mold	$627
2	**TAMSP**	Single Post - 15"H x 3" Diameter	$131
2	**TAM2**	Dual Arm Monitor Support - 18 1/2" extension	$172

TRANT6 **TOTAL: $10977**

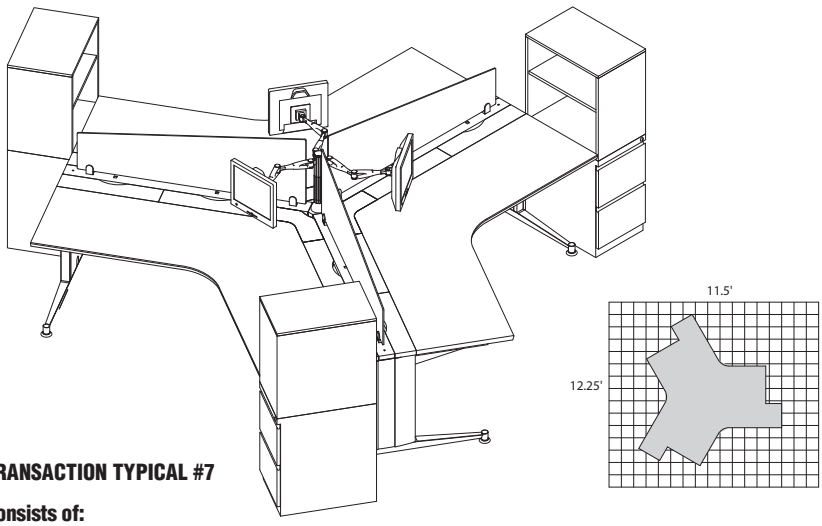

TRANSACTION TYPICAL #7

Consists of:

QTY.	MODEL NO.	DESCRIPTION	LIST PRICE EACH
1	**TA120S**	120-Degree 3-Pod Workstation 30"D x 102"W x 29 1/2"H	$10675
1	**TAETKD60S**	Power Kit – Starter 60"	$598
2	**TAETKD60A**	Power Kit – Adder 60"	$730
1	**TAESC72**	Hardwire Starter Cable	$186
1	**TADC120S**	Steel Data Access Channel (in 3 sections)	$445
3	**TAETP1**	Telecom Plate with RJ11 CAT3 Phone and RJ45 CAT6 Data	$119
3	**TAETP2**	Telecom Plate with 2 RJ45 CAT6 Data	$157
3	**TAETP8**	Telecom Plate with 1 15-Pin HD VGA	$193
1	**TAMSP**	Single Post – 15"H x 3"Dia.	$131
3	**TAM2**	Single-Monitor Arm Support – Dual Extension	$172
3	**TAAP5418D**	54" Acrylic Divider Panel 18"-10"H	$665
3	**TAST51LF**	Storage Towers	$1482

TRANT7 **TOTAL: $21859**

TRANSACTION™
CONFERENCE TABLES

TransAction's great style and smart design is perfect for today's multi-media conference rooms. Full size tables in three shapes in over 600 high-pressure laminates to complete your high-tech conference room. A full technology trough and surface opening with floating acrylic cover allow the power and data required for today's tech intensive meetings to be easily accessible yet concealed.

- Three shapes of conference surfaces: Boat-shaped, Rectangular, Racetrack
- Stylish heavy steel base and leg panels available in Mayline Corporate colors including new Tech Silver with leg inserts to match the table surface laminate or veneer.
- Tops constructed of 1 1/8" thick high-pressure laminate with knife-edge T-mold. Biltmore Cherry and Witchcraft laminates match Aberdeen Conference Accessories.
- Technology intensive table includes under-table trough and surface opening with acrylic cover; basic table also available without technology trough.
- 8' and 10' tables have two starter legs with one trough opening/cover; 12' table has two starter legs, one adder support leg and two trough openings/covers. Additional support leg and trough opening/cover per 6' section.
- All tables 29.5" in height.
- Power and data components ordered separately.

BASIC TABLES – HPL – No technology trough or opening. **Preconfigured Power Kits CANNOT be installed.**

Model No.	Description		Weight	Suggested Seating Capacity	List Price
TAC8BB	96" x 42"	Boat-Shaped	229#	6-8	$3184
TAC8BR	96" x 42"	Rectangular	229#	6-8	$3184
TAC8BT	96" x 42"	Racetrack	229#	6-8	$3184
TAC10BB	120" x 48"	Boat-Shaped	311#	8-10	$3979
TAC10BR	120" x 48"	Rectangular	311#	8-10	$3979
TAC10BT	120" x 48"	Racetrack	311#	8-10	$3979
TAC12BB	144" x 54"	Boat-Shaped	400#	10-12	$5319
TAC12BR	144" x 54"	Rectangular	400#	10-12	$5319
TAC12BT	144" x 54"	Racetrack	400#	10-12	$5319
TAC18BB	216" x 54"	Boat-Shaped	591#	14-16	$7626
TAC18BR	216" x 54"	Rectangular	591#	14-16	$7626
TAC18BT	216" x 54"	Racetrack	591#	14-16	$7626
TAC24BB	288" x 54"	Boat-Shaped	782#	16-20	$9934
TAC24BR	288" x 54"	Rectangular	782#	16-20	$9934
TAC24BT	288" x 54"	Racetrack	782#	16-20	$9934
TAC6BA	72" x 54"	Complete Adder – Applicable to any shape top	191#	2-4	$2307

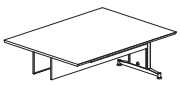
TAC6BA

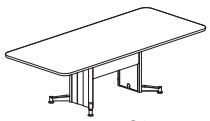
TAC8BR

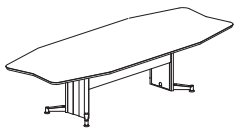
TAC10BB

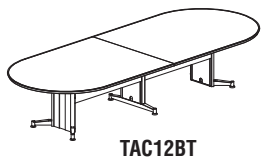
TAC12BT

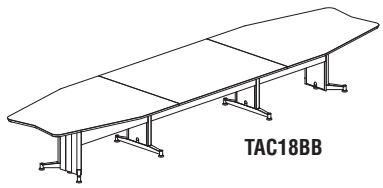
TAC18BB

TRANSACTION™ SERIES CONFERENCE TABLES

TECHNOLOGY INTENSIVE HPL TABLES

Model No.	Description		Weight	Suggested Seating Capacity	List Price
TAC8TB	96" x 42"	Boat-Shaped	229#	6-8	$4489
TAC8TR	96" x 42"	Rectangular	229#	6-8	$4489
TAC8TT	96" x 42"	Racetrack	229#	6-8	$4489
TAC10TB	120" x 48"	Boat-Shaped	311#	8-10	$5616
TAC10TR	120" x 48"	Rectangular	311#	8-10	$5616
TAC10TT	120" x 48"	Racetrack	311#	8-10	$5616
TAC12TB	144" x 54"	Boat-Shaped	440#	10-12	$8041
TAC12TR	144" x 54"	Rectangular	440#	10-12	$8041
TAC12TT	144" x 54"	Racetrack	440#	10-12	$8041
TAC18TB	216" x 54"	Boat-Shaped	669#	14-16	$11161
TAC18TR	216" x 54"	Rectangular	669#	14-16	$11161
TAC18TT	216" x 54"	Racetrack	669#	14-16	$11161
TAC24TB	288" x 54"	Boat-Shaped	898#	16-20	$14096
TAC24TR	288" x 54"	Rectangular	898#	16-20	$14096
TAC24TT	288" x 54"	Racetrack	898#	16-20	$14096
TAC6TA	72" x 54"	Complete Adder – Applicable to any shape top	229#	2-4	$3119

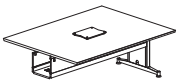
TAC6TA

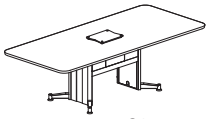
TAC8TR

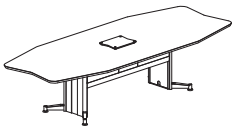
TAC10TB

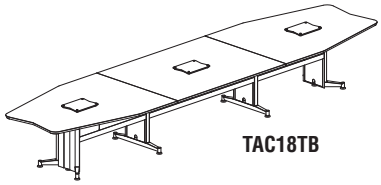
TAC18TB

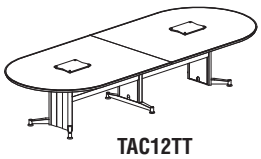
TAC12TT

TRANSACTION™ MEDIA TABLES

TransAction's boat-shaped Media Table offers a perfect solution for collaborative meetings requiring data and power connectivity and flexibility.

- Boat-shaped table available in Standing Height 42" or Sitting Height 29 1/2".
- Models available with or without power and data package.
- Optional power and data package includes:
  - 1–Single technology well power kit – single circuit
  - 3–Telecom plates – RJ11 CAT3 Phone and RJ45 CAT6 Data, USB, USB & 15 Pin-HD VGA F/F
  - 1–Plug-in power cord infeed 72" long – single circuit
- Other telecom plate options available as well as hardwire infeed. Call Ext. 222 in Customer Service for assistance.
- Contemporary styling, durable construction at an affordable price.
- Heavy-gauge steel table frames.
- Available in all Mayline high-pressure laminate surfaces.
- Biltmore Cherry and Witchcraft laminates match Aberdeen Conference Accessories.

Model No.	Description	Wt.	List Price
TAMST6	54"W x 72"L x 42"H Standing Height Table	254#	$4461
TAMSTE6	54"W x 72"L x 42"H Standing Height Table w/ power and data package	269#	$5551
TAMT6	54"W x 72"L x 29 1/2"H Sitting Height Table	229#	$4056
TAMTE6	54"W x 72"L x 29 1/2"H Sitting Height Table w/ power and data package	244#	$5146

TransAction Media Table shown with Aberdeen Conference Accessories.

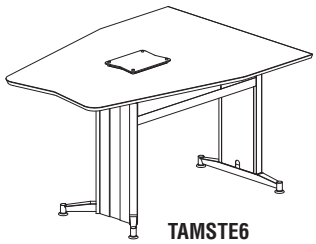

TAMSTE6

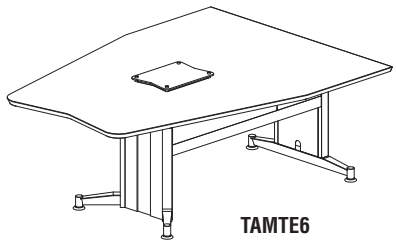

TAMTE6

TRANSACTION™

CONFERENCE TABLE POWER/TELECOM OPTIONS

- UL Recognized and CSA Certified Components.
- Convenient kits provide easy specifying.
- Ten Telecom Plate Options sold individually; others available upon request.
- Power and Telecom Plates are installed in trough panel.
- Additional options available upon special request to meet your requirements.
- Kits must be used with Mayline Hardwire Starter Cable.
- **Power Kits CANNOT be installed into Basic TransAction Conference Tables.**
- It is the customer's responsibility to ensure that the use of electrical systems, including the number of receptacles on a given circuit, and connection to building power source, be in compliance with all electrical codes.

POWER INFEED OPTIONS

- All circuits rated for 20 AMPS and are energized; includes female connector, length of flex cable and box connector.
- Up to 10 power blocks can be linked per hardwire cable.

Model No.	Description	List Price
TAESC72	72" Hardwire Starter Cable	$186
TAESC108	108" Hardwire Starter Cable	$240
TAESC144	144" Hardwire Starter Cable	$294

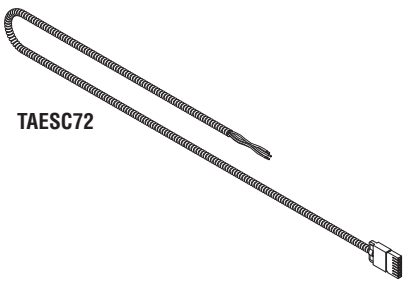

TAESC72

PRECONFIGURED CONFERENCE POWER KITS

Model No.	Description	List Price
TAECT1	Single Technology Well Kit - for Single Well 8' and 10' tables. (2) Double sided power block with circuit 1, 2 and IG receptacles on each side, (2) mounting bracket for block, (1) 24" 8 wire 4 circuit interconnecting cable	$445
TAECT2	Dual Technology Well Kit - for 12' Technology Conference Tables and larger. (4) Double sided power block with circuit 1, 2 and IG receptacles on each side, (2) mounting bracket for block, (2) 26" 8 wire 4 circuit interconnecting cable, (1) 68" 8 wire 4 circuit interconnecting cable, (1) simplex removal tool	$1066
TAECT3	6' Adder Conference Table Kit - add one Kit for each 6' Adder plus TAECT2. (2) Double sided power block with circuit 1, 2 and IG receptacles on each side, (2) mounting bracket for block, (1) 26" 8 wire 4 circuit interconnecting cable, (1) 68" 8 wire 4 circuit interconnecting cable (For example: a TAC24TB will require one TAECT2 Kit and two TAECT3 Kits.)	$623

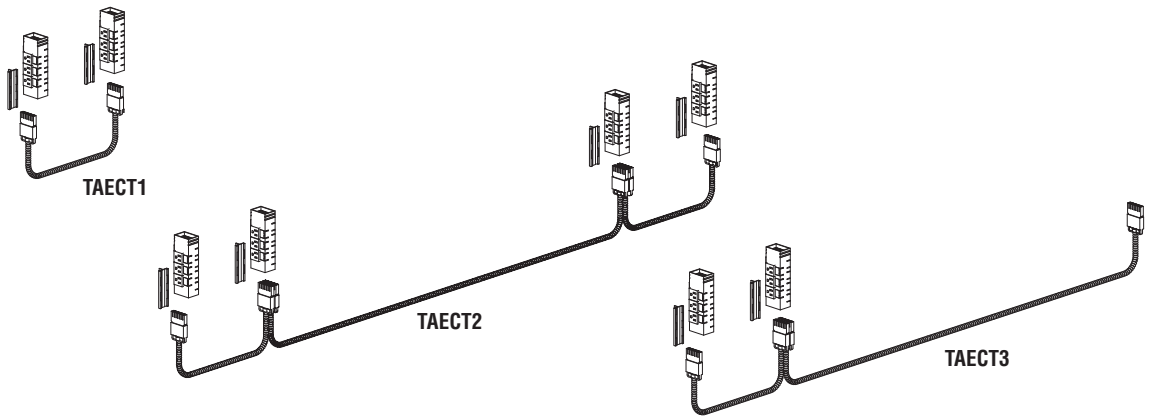

TAECT1

TAECT2

TAECT3

INDIVIDUAL TELECOM PLATE OPTIONS

- Ten commonly used telecom connections are offered to complete the technology requirements of conference tables or TransAction desking data channel.
- Six telecom plate openings per conference table well.
- Two (48" channel) and three (60" and 72" channel) openings per side of data channel.
- Black only.
- Common Telecom Definitions:
  HDMI (High Definition Multi-Media Interface) – Used to stream video on devices such as televisions or Blu-Ray DVD players.
  15 pin HD VGA F/F (High Definition Video Graphics Array) – Used to stream video usually found on a laptop or projector.
  Mini Stereo Inline Audio Connection (also called a 1/8" phone jack or headphone jack) – Runs audio from computers and mp3 players.
  USB (Universal Serial Bus) – Connects computer peripherals such as mouse or keyboard to a computer.
- **Additional options available upon request.**

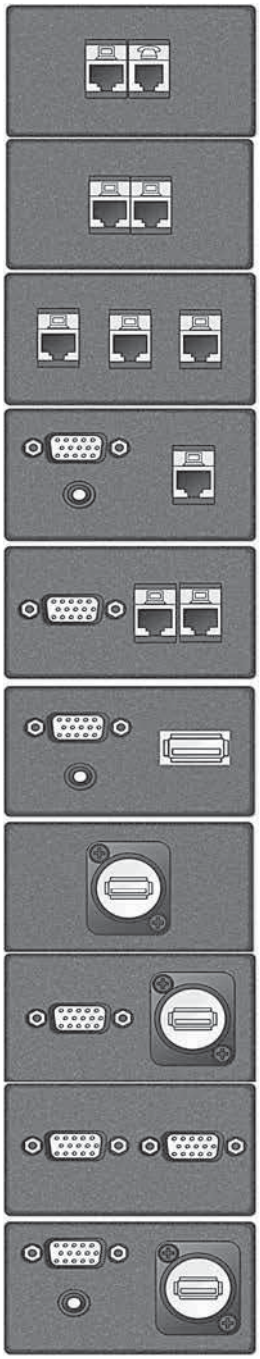

Model No.	Description	List Price
TAETP1	Telecom Plate with RJ11Cat3 Phone and RJ45 CAT6 Data	$119
TAETP2	Telecom Plate with 2 RJ45 Cat6 Data	$157
TAETP3	Telecom Plate with 3 RJ45 Cat6 Data	$230
TAETP4	Telecom Plate with RJ45 Cat6 Data, Mini Stereo Inline, and 15 Pin HD, VGA F/F	$260
TAETP5	Telecom Plate with 2 RJ45 Cat6 Data and 15 :in HD VGA F/F	$283
TAETP6	Telecom Plate with 1 HDMI F/F, 1 Mini Stereo Inline and 1 15 Pin, HD VGA F/F	$346
TAETP7	Telecom Plate with USB Inline	$67
TAETP8	Telecom Plate with USB Inline and 15 Pin HD VGA F/F	$193
TAETP9	Telecom Plate with 2 - 15 Pin HD VGA F/F	$263
TAETP10	Telecom Plate with USB Inline, 15 Pin HD VGA F/F, and Mini Stereo Inline	$243

ERGONOMIC ACCESSORIES

GSA GIZA/CAP

MONITOR ARMS AND SUPPORTS

- Manual adjustment posts and arms available in extruded aluminum.
- Aluminum posts available in 15" and 29 1/2"H.
- TAMDP will support up to 8 monitors.
- VESA 75mm and 100mm compliant.
- **Available in Silver with Black accents only.**

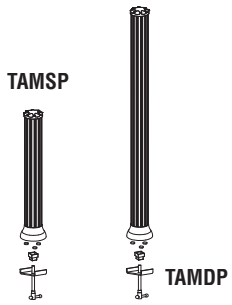

Model No.	Description	Wt.	List Price
TAMSP	Single Post – 15"H x 3" Diameter	7.25#	$131
TAMDP	Dual Post – 29 1/2"H x 3" Diameter	5.5#	$195
TAM2	Single Monitor Arm – Dual 18 1/2" Extension	4.5#	$172

Note: Grommet Mount/field installed by installation team.
* No finish specification required.

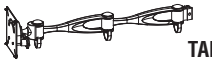

GSA

MONITOR ARMS

- Grommet or Tool-less Clamp installation that fits to any worksurface up to 3 1/2" thick.
- Cable management system keeps cables hidden.
- Counterbalanced spring technology with easy-to-use Allen wrench adjustment.
- Slim profiles when in the folded position – ideal for limited work space applications.
- Arms swivel 360° around base allowing for increased display positions.
- **Available in Silver only.**
- VESA 75mm and 100mm compliant.
- TAA compliant.

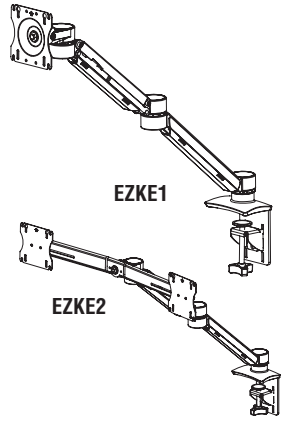

DESK-MOUNTED
- 26" of reach and 13" of usable height adjustment.
- 2-14 lb. max. load for single screen, 2-10 lb. max. load per screen for dual screen.

Model No.	Description	Wt.	List Price
EZKE1	Single Screen Monitor Arm	8#	$299
EZKE2	Dual Screen, Single Monitor Arm	8.4#	$422

POLE-MOUNTED
- 24" of reach and 18" of usable height adjustment (including pole).
- 4-20 lb. max. load per each monitor arm.
- Quick connect monitor screen feature.

Model No.	Description	Wt.	List Price
EZKC1	Pole Mount, Single Arm Monitor Mount	8.2#	$485
EZKC2	Pole Mount, Dual Arm Monitor Mount	12.2#	$735
EZKCC	Conversion Arm to Dual Arm for EZKC1	4#	$275

Note: Grommet Mount/field installed by installation team.

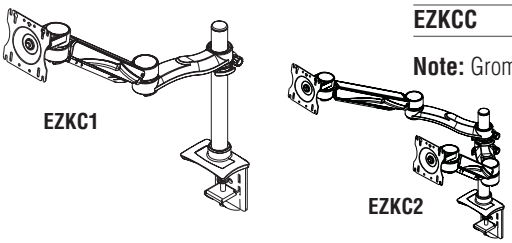

HEIGHT ADJUSTABLE ERGONOMIC ACCESSORIES

GSA

Data Center Keyboard Mechanisms

Sit/Stand height adjustable keyboard arm with paddle actuated spring brake height adjustment and lever for tilt. Variable width configurations, fixed mount application. Available in 19", 26.25" widths. Please contact Customer Service for compatibility on rectangular and corner workstations to insure proper fit.

Model No.	Description	Wt.	List Price
49263	Data Center 19" (A)	22#	$761
49264	Data Center 26.25" (B)	22#	$761
49265	Data Center 30"-45" adjustable (C) in 98" or (25mm) increments	22#	$761

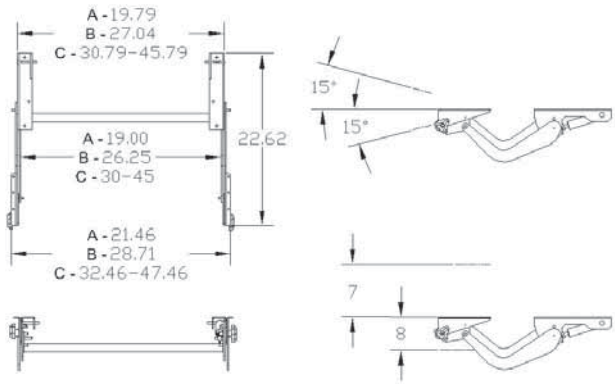

KEYBOARD SUPPORTS

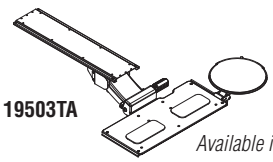

19503TA

Available in Black Only.

Model No.	Description	Wt.	List Price
19503TA	Combination keyboard/mouse platform 19"W x 8 1/4"D, 9"Dia. mouse platform	15#	$570

LED TASK LIGHTING

LED TASK LIGHTING – DESKTOP

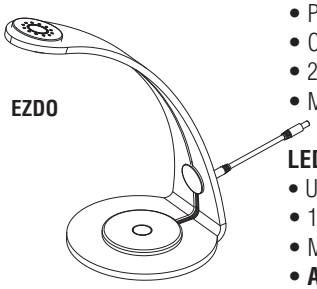

EZDO

- Reduces energy costs and fixed costs associated with expensive overhead bulbs.
- Reduces the need for overhead lighting and eye strain.
- Push button on/off with dimming function.
- CRI 80
- 24 VDC.
- Mercury, Lead and UV free.
- 50,000-hour (20 year) LED life.
- LED Color 3500K.
- UL Listed.

LED CLEAR DESK LIGHT

- Unique contemporary design.
- 13"H with 6 1/4" dia base.
- Multiple illumination levels: white, blue/white combo and blue.
- **Available in Clear Polycarbonate only.**
- Wattage – 4.5 W.

Model No.	Description	Wt.	List Price
EZDO	LED Clear Desk Light	2.5#	$295

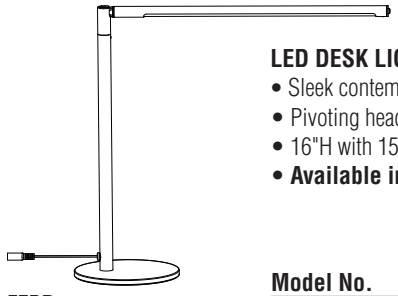

EZDR

LED DESK LIGHT

- Sleek contemporary design.
- Pivoting head and 90° adjustable arm.
- 16"H with 15 3/4" LED Light arm and 6" dia base.
- **Available in Brushed Nickel only.**
- Wattage – 5.6 W.
- Lumens – 390 Lm.

Model No.	Description	Wt.	List Price
EZDR	LED Single Arm Desk Light	3.5#	$295

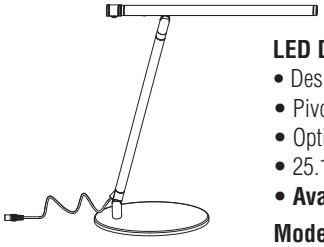

EZDM

LED DESK LIGHT

- Design Compliments any environment.
- Pivoting post and lamp head
- Optional clamp base and/or occupancy sensor.
- 25.1" max. height with 13.3: LED light arm and 8" x 5.5" oval base.
- **Available in painted silver finish.**
- Lumens - 220 max.
- Wattage - 5W
- GSA Applicable.

Model No.	Description	Wt.	List Price
EZDM	LED Desk Lamp, Oval Base	7#	$399
EZDMS	LED Desk Lamp, Oval Base,Occ. Sensc	7#	$475
EZDC	LED Desk Lamp, Clamp Base	7#	$399
EZDCS	LED Desk Lamp, Clamp Base,Occ. Sensc	7#	$475

LED TASK LIGHTING – UNDER CABINET

Basic

- Fixed, straight mount, linear light with Poly Carbonate lens.
- Capacitive Touch ON/OFF switch.
- Includes both wood (screws) and double-sided tape for mounting.
- 6' power cord (Note: Warranty valid only if utilizing provided power supply).
- CRI: 80, 3500K color temperature.
- Lumens - 220 max.
- Wattage - 7.9 W.

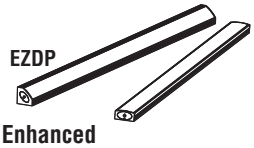

EZDP

Model No.	Description	Wt.	List Price
EZDP	Light, LED 16" Under Cabinet	1#	$185

Enhanced

- 2 length options: 18" and 30" (nominal).
- Fixed Light Bar with on/off switch and frosted lens.
- CRI: ≥ 80: 3500K color temperature.
- 6' power cord (Note: Warranty valid only if utilizing provided power supply).
- Includes both magnetic and wood (screws) hardware.
- LED lamp life: 50,000 hours.
- 120° Beam Angle.
- Painted Steel shroud conceals light fixture; attaches to undersurface of cabinet. Hardware included. Specify paint finish – White, Tech Silver or Black.

Model No.	Description	Dimensions	Wt.	List Price
EZBTL18	LED Under-Cabinet Light – for 24" Shelf	22"L x 1"	5#	$249
EZBTL30	LED Under-Cabinet Light – for 36" & 48" Shelf	34"L x 1"	5#	$329

DESKS AND STORAGE *(Casegoods)*

Medina™ Laminate Series
Brighton Laminate Series
Aberdeen® Laminate Series
Corsica® Veneer Series
Napoli® Veneer Series
Sorrento Veneer Series
Luminary Veneer Series
Mira Veneer Series
Lounge Furniture
Occasional Tables
Power and Data Options

MEDINA™ LAMINATE SERIES

Intertek GIZA/CAP FAST Freight QUICK-SHIP

MEDINA DESK SYSTEM

The Medina Series of casegoods combines Italian-influenced designs, style and durability. Medina features a floating work surface with a beveled edge that-combined with three different laminate options sets Medina above all other lines.

Laminate Options: Gray Steel, Mahogany, and Mocha.
CARB Compliant.

- All desk, return and extension work surfaces are 1" thick with a distinctive beveled edge.
- All locks are keyed-alike and feature removable cores for installing "keyed-different" locks after-market.
- All models in all three finishes are available on both the Quick-Ship and Fast Freight delivery programs with no quantity limitations.
- Silver detailing adds contemporary look to the Medina Series.
- PVC EDGE
- All Floor supported models include steel threaded leveling glides.

CURVED DESK

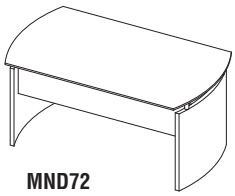
MND72

- Medina desk surface seems to "float" on silver supports.
- Curved end panels reflect curved ends of work surface.
- Silver modesty panel.

Model No.	Dimensions	Wt.	List Price
MND63	63"W x 36"D x 29 1/2"H Curved ends	128#	$635
MND72	72"W x 36"D x 29 1/2"H Curved ends	132#	$670

CURVED DESK RETURN WITH PENCIL-BOX-FILE PEDESTAL

- Works only with MND63 and MND72
- Creates L-shaped work surface when attached to desk.
- Gang-lock features removable core.
- Available for right or left side of desk.
- Supported by Return Pencil-Box-File Pedestal.
- Stands off floor on silver legs.

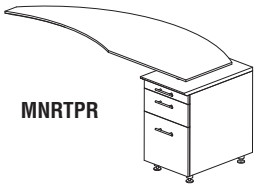
MNRTPR

Model No.	Description	Dimensions	Wt.	List Price
MNRTPR	63" Right return	63"W x 24"D x 29 1/2"H	119#	$715
MNRTPL	63" Left return	63"W x 24"D x 29 1/2"H	119#	$715

CURVED DESK EXTENSION

- Works only with MND63 and MND72
- Supported by silver standoffs.
- Available for right or left side of desk.

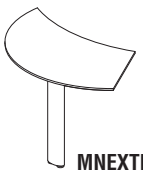
MNEXTL

Model No.	Description	Dimensions	Wt.	List Price
MNEXTR	Right extension	47"W x 28"D x 29 1/2"H	49#	$405
MNEXTL	Left extension	47"W x 28"D x 29 1/2"H	49#	$405

BRIDGE

MNBDGR

- Works only with MND63 and MND72
- Not free standing. Requires connection to credenza and desk.
- Features modesty panel.

Model No.	Description	Dimensions	Wt.	List Price
MNBDGR	Right Hand Bridge	48"W x 24"D x 29 1/2"H	62#	$335
MNBDGL	Left Hand Bridge	48"W x 24"D x 29 1/2"H	62#	$335

CREDENZA

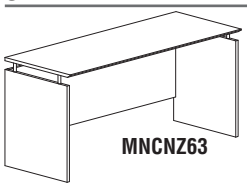
MNCNZ63

Model No.	Dimensions	Wt.	List Price
MNCNZ63	63"W x 20"D x 29 1/2"H	106#	$390
MNCNZ72	72"W x 20"D x 29 1/2"H	110#	$435

Note: Credenza's can be used with both the Curved Desks and Straight Desks.

MEDINA LAMINATE SERIES

HUTCH

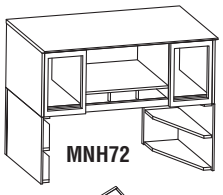

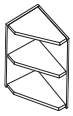

- Frosted glass doors with silver frames.
- Two open compartment slots.
- Fully assembled.
- Wall mounted or sits on corner supports.
- Two corner supports are needed to support a hutch.

Model No.	Description	Dimensions	Wt.	List Price
MNH63	63" Hutch	63"W x 15"D x 18 1/4"H	128#	$665
MNH72	72" Hutch	72"W x 15"D x 18 1/4"H	132#	$775
MNPO*	Corner Support	15"W x 15"D x 18"H	33#	$110

* Two corner supports are needed to support a hutch.
Note: Hutch's can be used with both the Curved Desks and Straight Desks.

STRAIGHT DESK

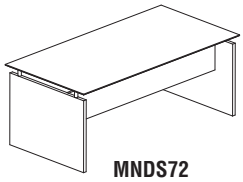

- Medina desk surface seems to “float” on silver supports.
- Silver modesty panels.

Model No.	Dimensions	Wt.	List Price
MNDS63	63"W x 36"D x 29 1/2"H Rectangle	128#	$635
MNDS72	72"W x 36"D x 29 1/2"H Rectangle	132#	$635

Note: Available April 2015.

UNIVERSAL STRAIGHT DESK

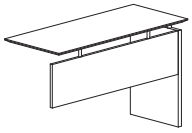

- Works only with MND63 and MND72
- Creates L-shaped work surface when attacked to desk.
- Universl Return

Model No.	Description	Dimensions	Wt.	List Price
MNRT	Universal Straight Return	48 1/2"W x 20"D x 29 1/2"H	119#	$344

Note: Available April 2015.

UNIVERSAL STRAIGHT BRIDGE

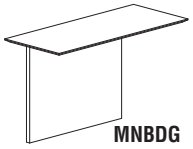

- Works only with MND63 and MND72
- Not free standing. Requires connection to credenza and desk.
- Features modesty panel

Model No.	Description	Dimensions	Wt.	List Price
MNBDG	Universal Straight Bridge	48 1/2"W x 20"D x 29 1/2"H	62#	$335

Note: Available April 2015.

HUTCH TASK LIGHT

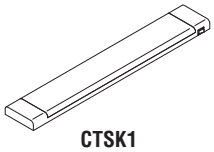

- Task lighting attached to underside of hutch.
- Includes diffuser lens.
- Uses two energy efficient 13W T5 bulb.

Model No.	Description	Dimensions	Wt.	List Price
CTSK1	Task Light	25"W x 4"D x 1"H	5#	$144

MOBILE PEDESTALS

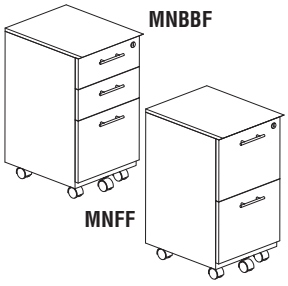

- Drawers operate smoothly using full-extension ball-bearing suspensions.
- Fits under credenzas.
- 2" dual-hooded casters.

Model No.	Description	Dimensions	Wt.	List Price
MNBBF	Box-Box File	15 1/2"W x 18"D x 26 3/4"H	70#	$440
MNFF	File-File	15 1/2"W x 18"D x 26 3/4"H	68#	$405

CENTER DESK DRAWER

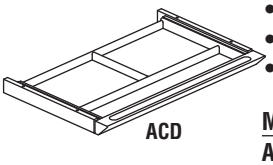

- Solid wood frame construction.
- Drawer operates smoothly using full-extension ball-bearing suspension.
- Available in Graphite with Black drawer front only.

Model No.	Dimensions	Wt.	List Price
ACD	25W x 18"D x 2"H Assembled	10#	$172

MEDINA LAMINATE SERIES

LATERAL FILE

MVLF

- Accommodate letter and legal sized hanging file folders.
- Includes counter-weight for stability when in use.
- Gang-lock features removable core enabling keyed-alike suites.
- Drawers operate smoothly using full-extension ball-bearing suspensions.

Model No.	Description	Dimensions	Wt.	List Price
MVLF	File-File	36"W x 20"D x 29 1/2"H Assembled	180#	$835

LOW WALL CABINET WITH DOORS

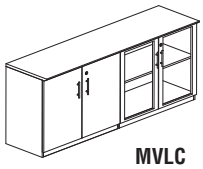
MVLC

- Sets of doors lock separately. Keyed alike.
- Includes one adjustable shelf on each side.

Model No.	Description	Dimensions	Wt.	List Price
MVLC	Wood/Glass Door Combination	72"W x 20"D x 29 1/2"H	190#	$970

GLASS DISPLAY CABINET

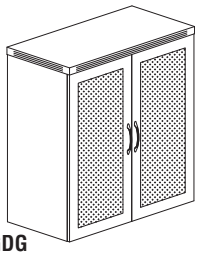
MGDG

- Glass is tempered for safety and durability.
- Two (2) adjustable shelves on 1 1/4" increments with a total of 5'
- Curved metal pulls with brushed nickel finish. Additional pull options available.
- Grommet in back panel for wall access.

Model No.	Description	Dimensions	Wt.	List Price
MGDG	Glass Display Cabinet	36"W x 20"D x 39 1/4"H	119#	$895

Note: Available April 2015.

STORAGE CABINET

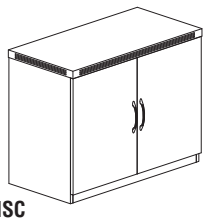
MSC

- Self-closing hinged doors.
- One (1) shelf adjustable on 1 1/4" increments with a total of 5'
- Curved metal pulls with brushed nickel finish. Additional pull options available.
- Mouse hole in back panel for wall access.
- Shelf contains corner mouse hole for vertical cable management.

Model No.	Description	Dimensions	Wt.	List Price
MSC	Storage Cabinet	36"W x 20"D x 29 1/2"H	96#	$692

Note: Available April 2015.

BOOKCASES

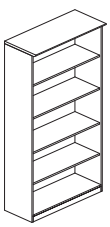
MVB5

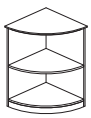
MVBQ2

- Open shelves for convenient storage.
- Choice of two or five shelf units.
- Adjustable shelves.
- 1" thick shelves.
- MVB5 supports 75 lbs. per shelf, evenly distributed.
- MVBQ2 supports 25 lbs. per shelf, evenly distributed

Model No.	Description	Dimensions	Wt.	List Price
MVB5	5 Shelf	36"W x 13"D x 68"H	145#	$585
MVBQ2	2 Shelf 1/4 - Round	20"W x 20"D x 29 1/2"H	36#	$215

MEDINA LAMINATE SERIES

MEDINA CONFERENCE TABLES

The Medina laminate conference room furniture features elegant lines with excellent durability.
Laminate Options: Gray Steel, Mahogany, and Mocha.

- Cutout designed to support PM22 listed below.
- 250 lb. weight capacity
- Grommet hole cutout size is 4" x 8".

MNCR48

Model No.	Description	Dimensions	Wt.	List Price
MNCR48	Round Conference Table	48" Round x 29 1/2"H	135#	$595
MNC8	8' Conference Table	96"W x 42"D x 29 1/2"H	236#	$1095
MNC10	10' Conference Table	120"W x 48"D x 29 1/2"H	306#	$1495
MNC12	12' Conference Table	144"W x 48"D x 29 1/2"H	358#	$1789
MNC14	14' Conference Table	168"W x 48"D x 29 1/2"H	399#	$2083
MNPB	Presentation Board	48"W x 48"H x 3 1/4"D	110#	$675

Note: Models MNC12 and MNC14 available April 2015.

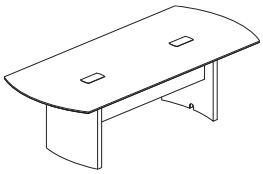
MNC8

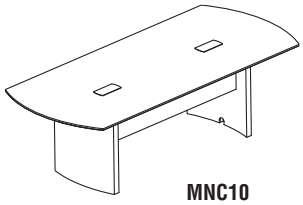
MNC10

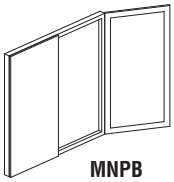
MNPB

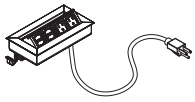
PM22

Model No.	Description	List Price
PM22 UL LISTED	Power and Data Surface Module with 2 power and 2 data outlets (Silver only).	$464

MEDINA RECEPTION FURNITURE

Medina Reception Furniture is available in three colors.
Laminate Options: Gray Steel, Mahogany, an d Mocha.

- Universal Return
- 3/4" frosted, tempered glass.

Model No.	Description	Dimensions	Wt.	List Price
MNRS	Reception Station (no peds)	87 1/4"W x 37 1/4"D x 42 3/4"H	360#	$2516
MNRSBF	Reception Station w/B/B/F, F/F	87 1/4"W x 37 1/4"D x 42 3/4"H	520#	$3361
MNRSBB	Reception Station w/2-B/B/F	87 1/4"W x 37 1/4"D x 42 3/4"H	506#	$3396
MNRSLBF	Reception Station w/B/B/F, F/F	87 1/4"W x 37 1/4"D x 42 3/4"H Desk 48"W x 25"D x 39 1/4"H Return	882#	$4089
MNRSLBB	Reception Station w/2-B/B/F	87 1/4"W x 37 1/4"D x 42 3/4"H Desk 48"W x 25"D x 39 1/4"H Return	882#	$4124
MNRBBF	Reception Box/Box/File	15 1/2"W x 18"D x 27 1/2"H	77#	$440
MNRFF	Reception File/File	15 1/2"W x 18"D x 27 1/2"H	75#	$405

Note: Available April 2015.

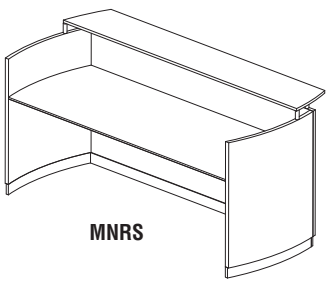
MNRS

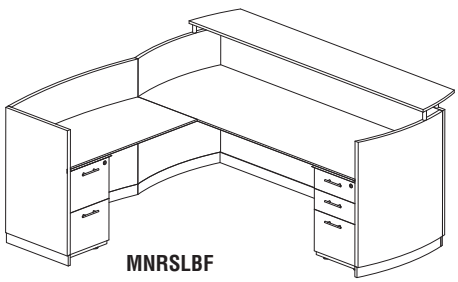
MNRSLBF

MEDINA LAMINATE SERIES TYPICALS

- Order complete suites using "MNT__" models.

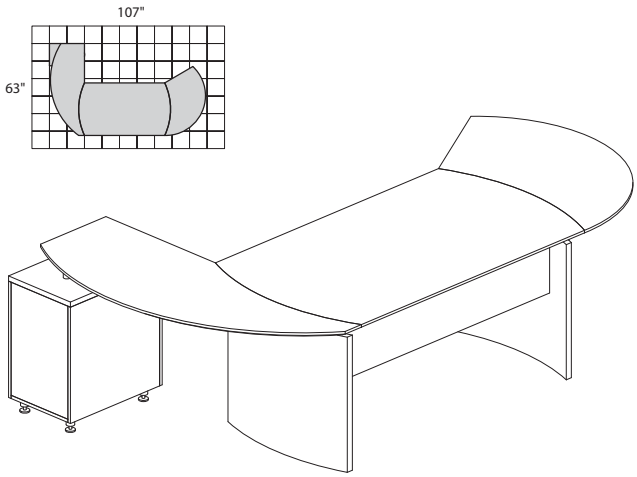

MEDINA SERIES – SUITE #1

Consists of:

QTY.	MODEL NO.	DESCRIPTION	LIST PRICE EACH
1	**MND63**	63"W Desk	$635
1	**MNEXTL**	Curved Desk Ext.	$405
1	**MNRTPR**	Curved Desk Return w/Pencil-Box-File	$715
1	**ACD**	Center Drawer	$172

MNT1 **TOTAL: $1927**

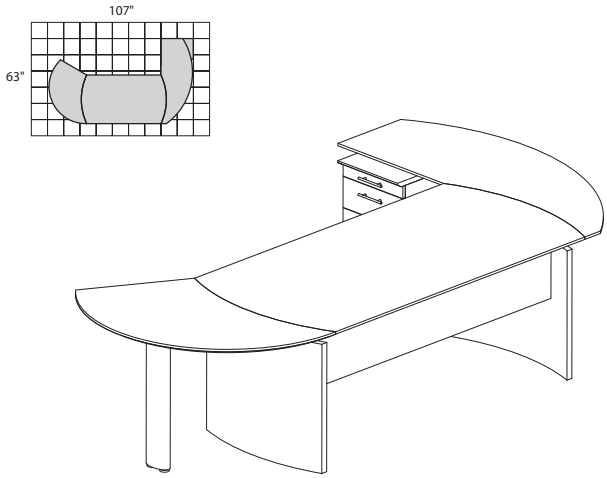

MEDINA SERIES – SUITE #2

Consists of:

QTY.	MODEL NO.	DESCRIPTION	LIST PRICE EACH
1	**MND63**	63"W Desk	$635
1	**MNEXTR**	Curved Desk Ext.	$405
1	**MNRTPL**	Curved Desk Return w/Pencil-Box-File	$715
1	**ACD**	Center Drawer	$172

MNT2 **TOTAL: $1927**

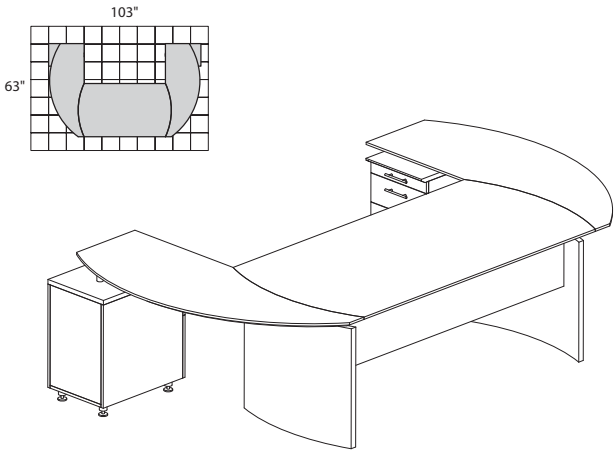

MEDINA SERIES – SUITE #3

Consists of:

QTY.	MODEL NO.	DESCRIPTION	LIST PRICE EACH
1	**MND63**	63"W Desk	$635
1	**MNRTPR**	Curved Desk Return w/Pencil-Box-File	$715
1	**MNRTPL**	Curved Desk Return w/Pencil-Box-File	$715
1	**ACD**	Center Drawer	$172

MNT3 **TOTAL: $2237**

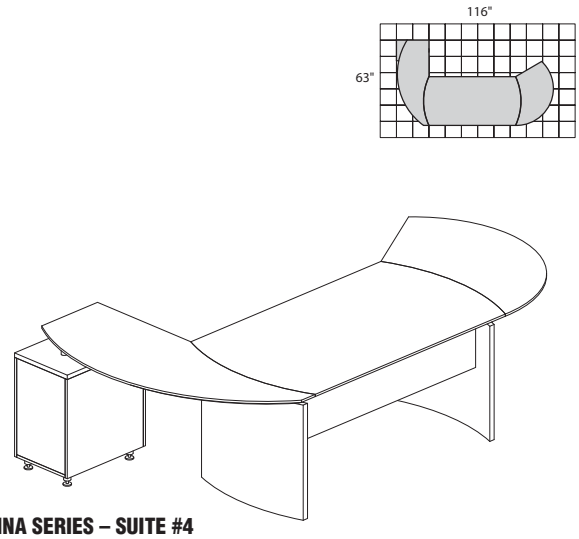

MEDINA SERIES – SUITE #4

Consists of:

QTY.	MODEL NO.	DESCRIPTION	LIST PRICE EACH
1	**MND72**	72"W Desk	$670
1	**MNEXTL**	Curved Desk Ext.	$405
1	**MNRTPR**	Curved Desk Return w/Pencil-Box-File	$715
1	**MNCD**	Center Drawer	$172

MNT4 **TOTAL: $1962**

MEDINA LAMINATE SERIES TYPICALS

- Order complete suites using "MNT__" models.

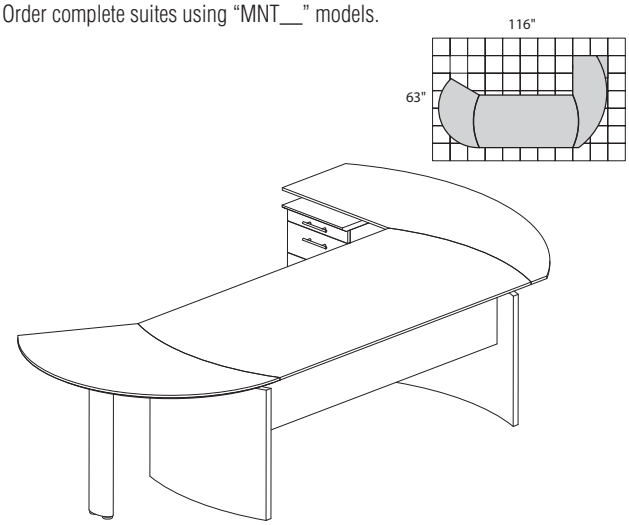

MEDINA SERIES – SUITE #5

Consists of:

QTY.	MODEL NO.	DESCRIPTION	LIST PRICE EACH
1	**MND72**	72"W Desk	$670
1	**MNEXTR**	Curved Desk Ext.	$405
1	**MNRTPL**	Curved Desk Return w/Pencil-Box-File	$715
1	**ACD**	Center Drawer	$172

MNT5 **TOTAL: $1962**

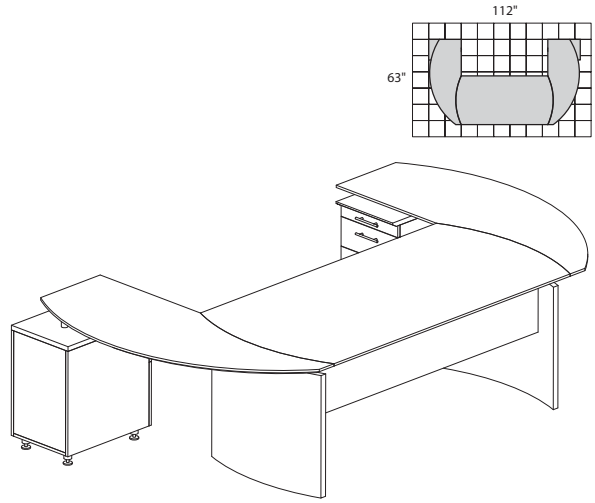

MEDINA SERIES – SUITE #6

Consists of:

QTY.	MODEL NO.	DESCRIPTION	LIST PRICE EACH
1	**MND72**	72"W Desk	$670
1	**MNRTPR**	Curved Desk Return w/Pencil-Box-File	$715
1	**MNRTPL**	Curved Desk Return w/Pencil-Box-File	$715
1	**ACD**	Center Drawer	$172

MNT6 **TOTAL: $2272**

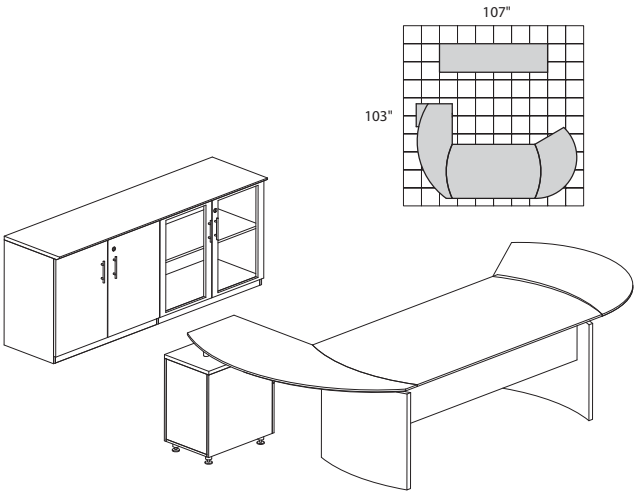

MEDINA SERIES – SUITE #7

Consists of:

QTY.	MODEL NO.	DESCRIPTION	LIST PRICE EACH
1	**MND63**	63"W Desk	$635
1	**MNEXTL**	Curved Desk Ext.	$405
1	**MNRTPR**	Curved Desk Return w/Pencil-Box-File	$715
1	**ACD**	Center Drawer	$172
1	**MVLC**	Low Wall Cabinet	$970

MNT7 **TOTAL: $2897**

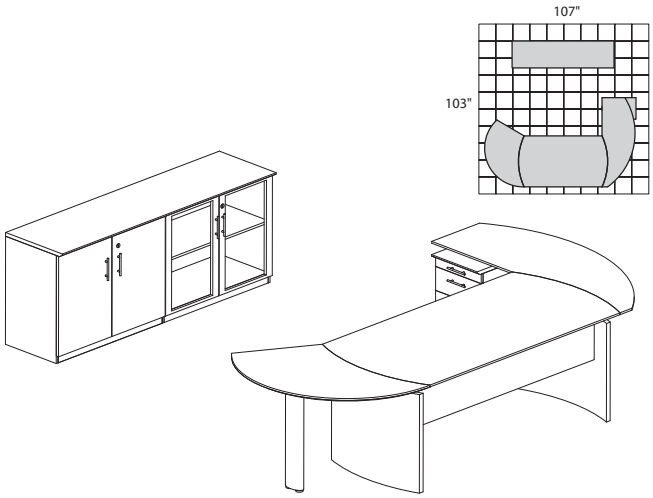

MEDINA SERIES – SUITE #8

Consists of:

QTY.	MODEL NO.	DESCRIPTION	LIST PRICE EACH
1	**MND63**	63"W Desk	$635
1	**MNEXTR**	Curved Desk Ext.	$405
1	**MNRTPL**	Curved Desk Return w/Pencil-Box-File	$715
1	**ACD**	Center Drawer	$172
1	**MVLC**	Low Wall Cabinet	$970

MNT8 **TOTAL: $2897**

MEDINA LAMINATE SERIES TYPICALS

- Order complete suites using "MNT__" models.

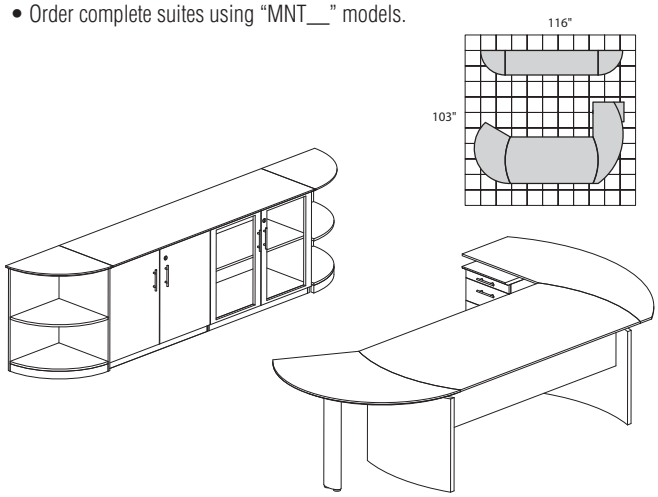

MEDINA SERIES – SUITE #9

Consists of:

QTY.	MODEL NO.	DESCRIPTION	LIST PRICE EACH
1	**MND72**	72"W Desk	$670
1	**MNEXTR**	Curved Desk Ext.	$405
1	**MNRTPL**	Curved Desk Return w/Pencil-Box-File	$715
1	**ACD**	Center Drawer	$172
1	**MVLC**	Low Wall Cabinet	$970
1	**MVBQ2**	2 Shelf 1/4-Round	$215
1	**MVBQ2**	2 Shelf 1/4-Round	$215

MNT9 **TOTAL: $3362**

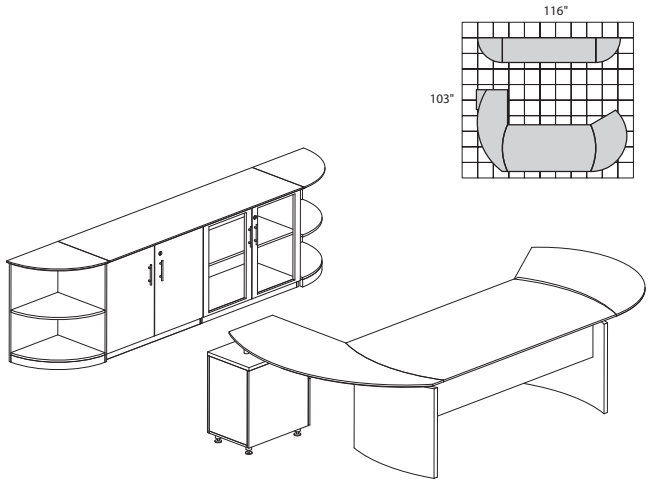

MEDINA SERIES – SUITE #10

Consists of:

QTY.	MODEL NO.	DESCRIPTION	LIST PRICE EACH
1	**MND72**	72"W Desk	$670
1	**MNEXTL**	Curved Desk Ext.	$405
1	**MNRTPR**	Curved Desk Return w/Pencil-Box-File	$715
1	**ACD**	Center Drawer	$172
1	**MVLC**	Low Wall Cabinet	$970
1	**MVBQ2**	2 Shelf 1/4-Round	$215
1	**MVBQ2**	2 Shelf 1/4-Round	$215

MNT10 **TOTAL: $3362**

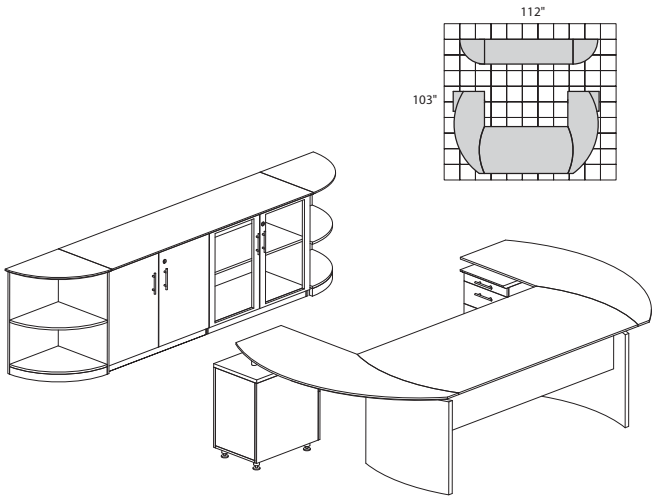

MEDINA SERIES – SUITE #13

Consists of:

QTY.	MODEL NO.	DESCRIPTION	LIST PRICE EACH
1	**MND72**	72"W Desk	$670
1	**MNRTPR**	Curved Desk Return w/Pencil-Box-File	$715
1	**MNRTPL**	Curved Desk Return w/Pencil-Box-File	$715
1	**ACD**	Center Drawer	$172
1	**MVLC**	Low Wall Cabinet	$970
1	**MVBQ2**	2 Shelf 1/4-Round	$215
1	**MVBQ2**	2 Shelf 1/4-Round	$215

MNT13 **TOTAL: $3672**

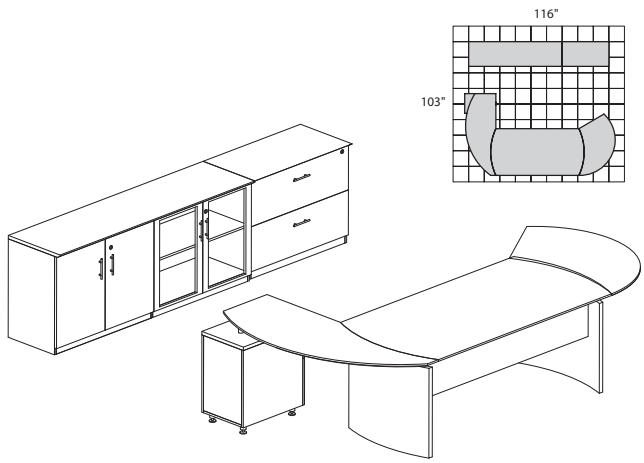

MEDINA SERIES – SUITE #15

Consists of:

QTY.	MODEL NO.	DESCRIPTION	LIST PRICE EACH
1	**MND72**	72"W Desk	$670
1	**MNEXTL**	Curved Desk Ext.	$405
1	**MNRTPR**	Curved Desk Return w/Pencil-Box-File	$715
1	**ACD**	Center Drawer	$172
1	**MVLC**	Low Wall Cabinet	$970
1	**MVLF**	Lateral File	$835

MNT15 **TOTAL: $3767**

MEDINA LAMINATE SERIES TYPICALS

- Order complete suites using "MNT__" models.

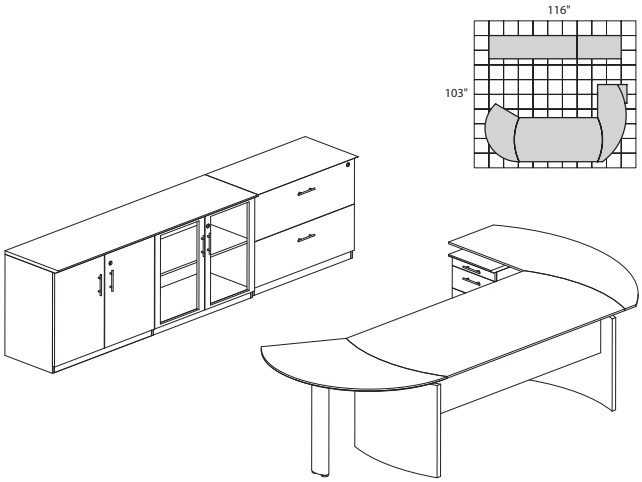

MEDINA SERIES – SUITE #16

Consists of:

QTY.	MODEL NO.	DESCRIPTION	LIST PRICE EACH
1	**MND72**	72"W Desk	$670
1	**MNEXTR**	Curved Desk Ext.	$405
1	**MNRTPL**	Curved Desk Return w/Pencil-Box-File	$715
1	**ACD**	Center Drawer	$172
1	**MVLC**	Low Wall Cabinet	$970
1	**MVLF**	Lateral File	$835

MNT16 **TOTAL: $3767**

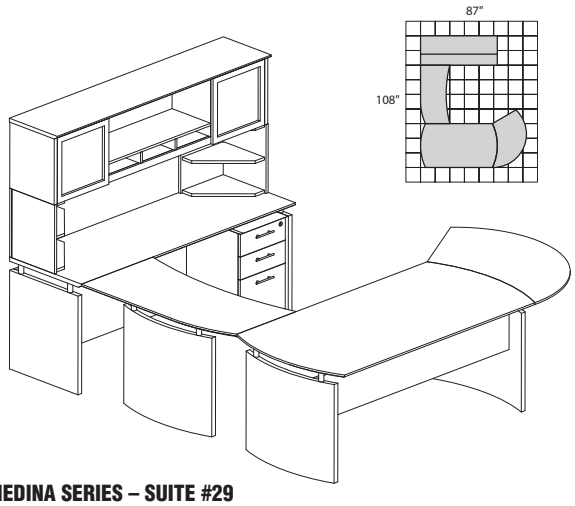

MEDINA SERIES – SUITE #29

Consists of:

QTY.	MODEL NO.	DESCRIPTION	LIST PRICE EACH
1	**MND63**	63"W Desk	$635
1	**MNEXTL**	Curved Desk Ext.	$405
1	**ACD**	Center Drawer	$172
1	**MNBDGR**	Bridge Right-Hand	$335
1	**MNCNZ63**	63"W Credenza	$390
1	**MNH63**	63"W Hutch	$665
1	**MNBBF**	Box Box File	$440
2	**MNPO**	Corner Supports	$110

MNT29 **TOTAL: $3262**

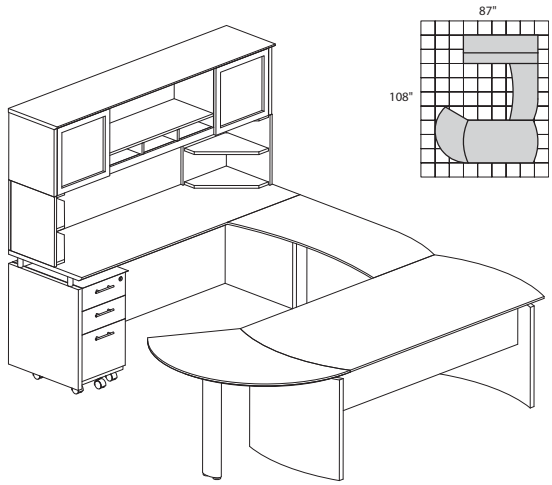

MEDINA SERIES – SUITE #30

Consists of:

QTY.	MODEL NO.	DESCRIPTION	LIST PRICE EACH
1	**MND63**	63"W Desk	$635
1	**MNEXTR**	Curved Desk Ext.	$405
1	**ACD**	Center Drawer	$172
1	**MNBDGL**	Bridge Left-Hand	$335
1	**MNCNZ63**	63"W Credenza	$390
1	**MNH63**	63"W Hutch	$665
1	**MNBBF**	Box Box File	$440
2	**MNPO**	Corner Supports	$110

MNT30 **TOTAL: $3262**

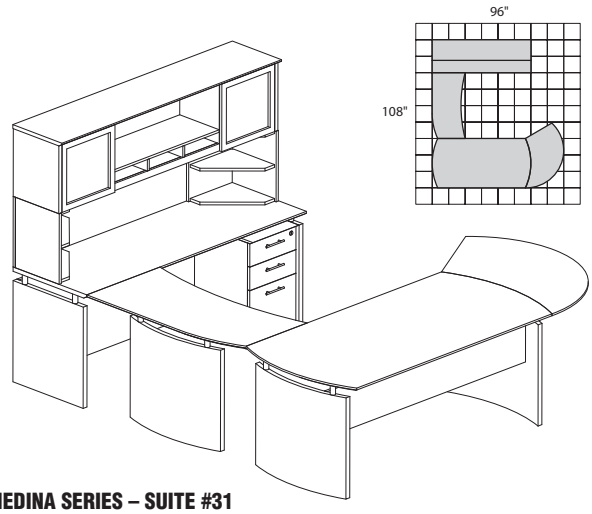

MEDINA SERIES – SUITE #31

Consists of:

QTY.	MODEL NO.	DESCRIPTION	LIST PRICE EACH
1	**MND72**	72"W Desk	$670
1	**MNEXTL**	Curved Desk Ext.	$405
1	**ACD**	Center Drawer	$172
1	**MNBDGR**	Bridge Right-Hand	$335
1	**MNCNZ72**	72"W Credenza	$435
1	**MNH72**	72"W Hutch	$775
1	**MNBBF**	Box Box File	$440
2	**MNPO**	Corner Supports	$110

MNT31 **TOTAL: $3452**

MEDINA LAMINATE SERIES TYPICALS

- Order complete suites using "MNT__" models.

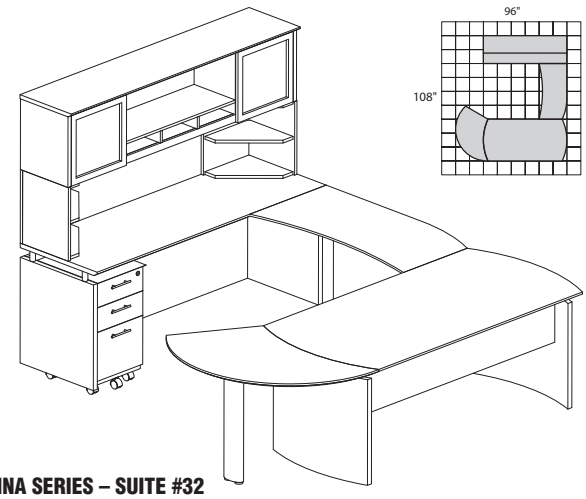

MEDINA SERIES – SUITE #32

Consists of:

QTY.	MODEL NO.	DESCRIPTION	LIST PRICE EACH
1	**MND72**	72"W Desk	$670
1	**MNEXTR**	Curved Desk Ext.	$405
1	**ACD**	Center Drawer	$172
1	**MNBDGL**	Bridge Left-Hand	$335
1	**MNCNZ72**	72"W Credenza	$435
1	**MNH72**	72"W Hutch	$775
1	**MNBBF**	Box Box File	$440
2	**MNPO**	Corner Supports	$110

MNT32 **TOTAL: $3452**

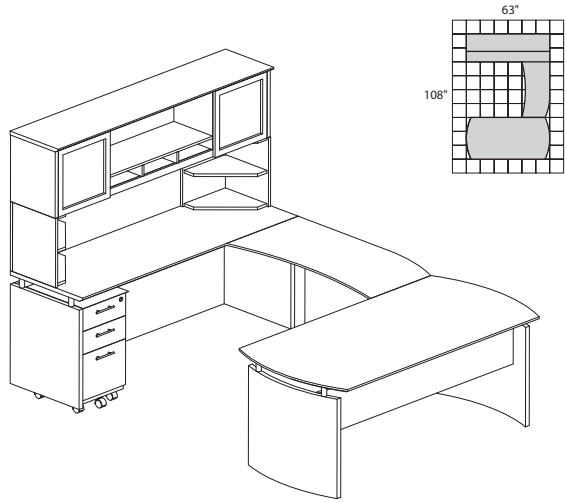

MEDINA SERIES – SUITE #33

Consists of:

QTY.	MODEL NO.	DESCRIPTION	LIST PRICE EACH
1	**MND63**	63"W Desk	$635
1	**ACD**	Center Drawer	$172
1	**MNBDGL**	Bridge Left-Hand	$335
1	**MNCNZ63**	63"W Credenza	$390
1	**MNH63**	63"W Hutch	$665
1	**MNBBF**	Box Box File	$440
2	**MNPO**	Corner Supports	$110

MNT33 **TOTAL: $2857**

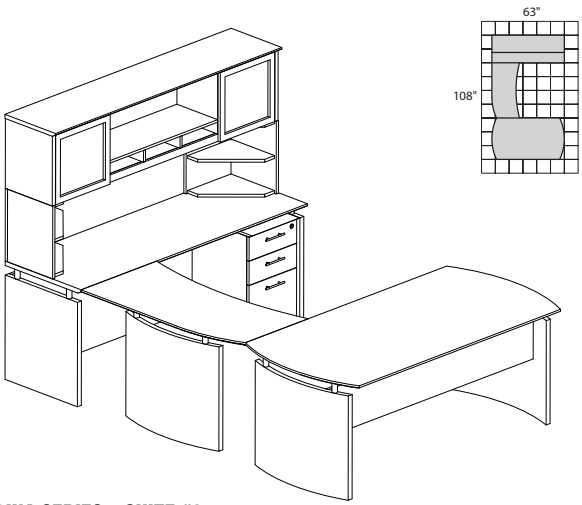

MEDINA SERIES – SUITE #34

Consists of:

QTY.	MODEL NO.	DESCRIPTION	LIST PRICE EACH
1	**MND63**	63"W Desk	$635
1	**ACD**	Center Drawer	$172
1	**MNBDGR**	Bridge Right-Hand	$335
1	**MNCNZ63**	63"W Credenza	$390
1	**MNH63**	63"W Hutch	$665
1	**MNBBF**	Box Box File	$440
2	**MNPO**	Corner Supports	$110

MNT34 **TOTAL: $2857**

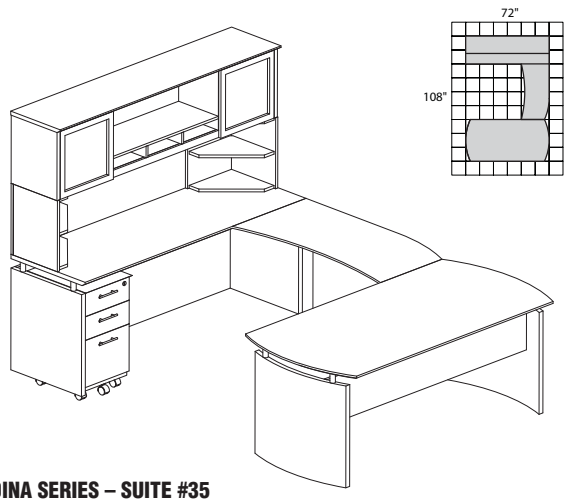

MEDINA SERIES – SUITE #35

Consists of:

QTY.	MODEL NO.	DESCRIPTION	LIST PRICE EACH
1	**MND72**	72"W Desk	$670
1	**ACD**	Center Drawer	$172
1	**MNBDGL**	Bridge Left-Hand	$335
1	**MNCNZ72**	72"W Credenza	$435
1	**MNH72**	72"W Hutch	$775
1	**MNBBF**	Box Box File	$440
2	**MNPO**	Corner Supports	$110

MNT35 **TOTAL: $3047**

MEDINA LAMINATE SERIES TYPICALS

- Order complete suites using "MNT__" models.

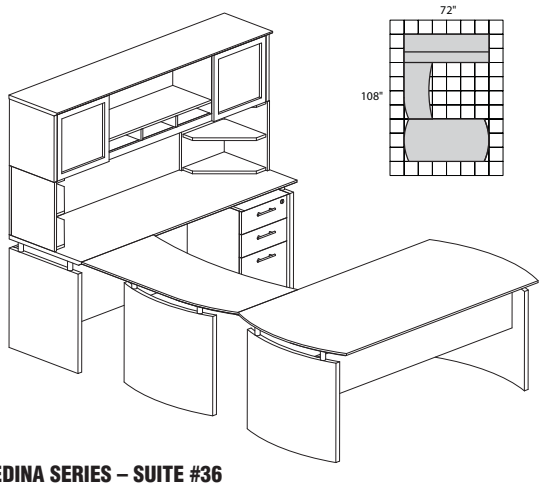

MEDINA SERIES – SUITE #36

Consists of:

QTY.	MODEL NO.	DESCRIPTION	LIST PRICE EACH
1	**MND72**	72"W Desk	$670
1	**ACD**	Center Drawer	$172
1	**MNBDGR**	Bridge Right-Hand	$335
1	**MNCNZ72**	72"W Credenza	$435
1	**MNH72**	72"W Hutch	$775
1	**MNBBF**	Box Box File	$440
2	**MNPO**	Corner Supports	$110

MNT36 **TOTAL: $3047**

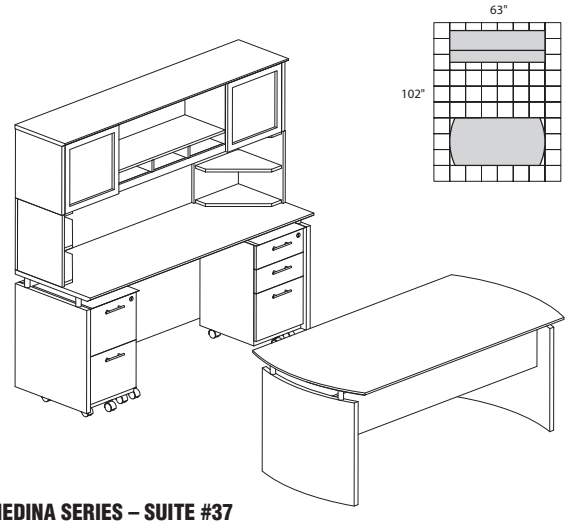

MEDINA SERIES – SUITE #37

Consists of:

QTY.	MODEL NO.	DESCRIPTION	LIST PRICE EACH
1	**MND63**	63"W Desk	$635
1	**ACD**	Center Drawer	$172
1	**MNCNZ63**	63"W Credenza	$390
1	**MNH63**	63"W Hutch	$665
1	**MNBBF**	Box Box File	$440
1	**MNFF**	File File Ped	$405
2	**MNPO**	Corner Supports	$110

MNT37 **TOTAL: $2927**

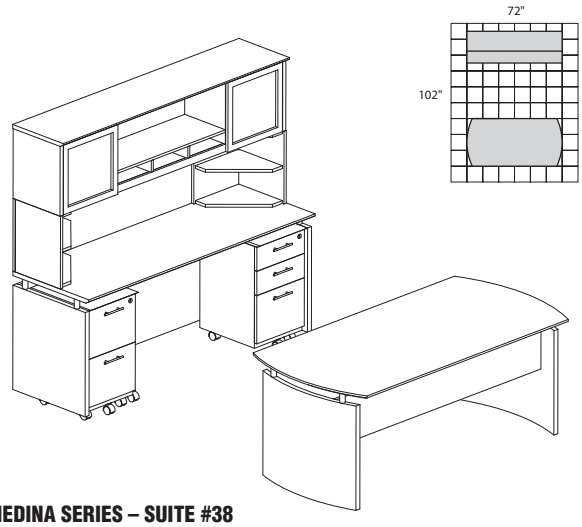

MEDINA SERIES – SUITE #38

Consists of:

QTY.	MODEL NO.	DESCRIPTION	LIST PRICE EACH
1	**MND72**	72"W Desk	$670
1	**ACD**	Center Drawer	$172
1	**MNCNZ72**	72"W Credenza	$435
1	**MNH72**	72"W Hutch	$775
1	**MNBBF**	Box Box File	$440
1	**MNFF**	File File Ped	$405
2	**MNPO**	Corner Supports	$110

MNT38 **TOTAL: $3117**

MEDINA LAMINATE SERIES TYPICALS

- Order complete suites using "MNT__" models.

Note: Available April 2015.

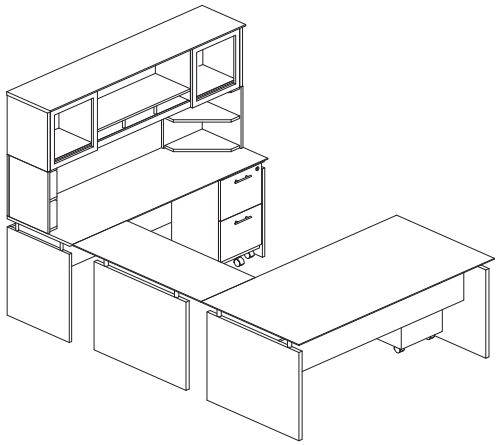

MEDINA SERIES – SUITE #39

Consists of:

QTY.	MODEL NO.	DESCRIPTION	LIST PRICE EACH
1	**MNDS72**	72"W Straight Desk	$670
1	**MNBDG**	48" Universal Bridge	$335
1	**MNCNZ72**	72" Credenza	$435
1	**MNBBF**	Box Box File	$440
1	**MNFF**	File File	$405
1	**MNH72**	72"W Hutch	$775
1	**ACD**	Center Drawer	$172
2	**MNPO**	Hutch Supports	$110

MNT39 **TOTAL: $3452**

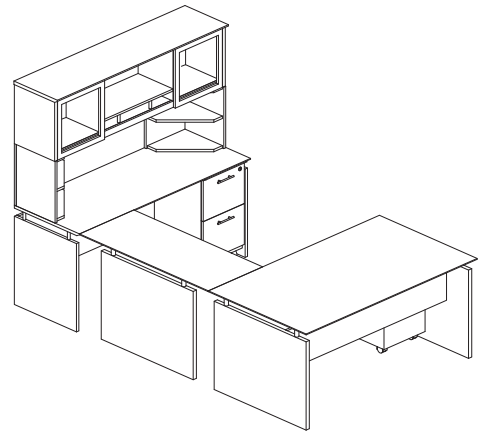

MEDINA SERIES – SUITE #40

Consists of:

QTY.	MODEL NO.	DESCRIPTION	LIST PRICE EACH
1	**MNDS63**	63"W Straight Desk	$635
1	**MNBDG**	48" Universal Bridge	$335
1	**MNCNZ63**	63" Credenza	$390
1	**MNBBF**	Box Box File	$440
1	**MNFF**	File File	$405
1	**MNH63**	63"W Hutch	$665
1	**ACD**	Center Drawer	$172
2	**MNPO**	Hutch Supports	$110

MNT40 **TOTAL: $3262**

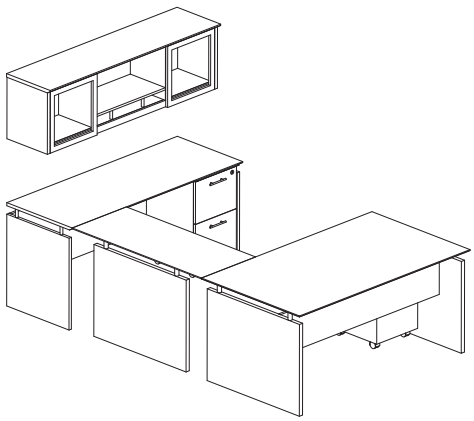

MEDINA SERIES – SUITE #41

Consists of:

QTY.	MODEL NO.	DESCRIPTION	LIST PRICE EACH
1	**MNDS63**	63"W Straight Desk	$635
1	**MNBDG**	48" Universal Bridge	$335
1	**MNCNZ63**	63" Credenza	$390
1	**MNBBF**	Box Box File	$440
1	**MNFF**	File File	$405
1	**MNH63**	63"W Hutch	$665
1	**ACD**	Center Drawer	$172

MNT41 **TOTAL: $3042**

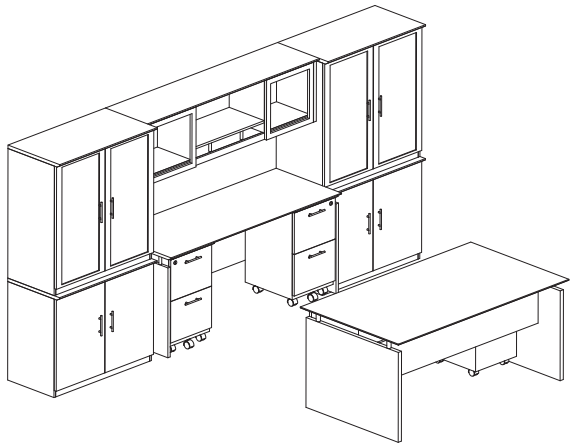

MEDINA SERIES – SUITE #42

Consists of:

QTY.	MODEL NO.	DESCRIPTION	LIST PRICE EACH
1	**MNDS63**	63"W Straight Desk	$635
1	**MNCNZ63**	63" Credenza	$390
1	**MNBBF**	Box Box File	$440
1	**MNFF**	File File	$405
1	**MNH63**	63"W Hutch	$665
2	**MSC**	Storage Cabinet	$692
2	**MGDG**	Glass Door Cabinet	$895
1	**ACD**	Center Drawer	$172

MNT42 **TOTAL: $5881**

ABERDEEN® LAMINATE SERIES

GIZA/CAP Intertek QUICK-SHIP FAST Freight

The Aberdeen Series of laminate casegoods combine fashionable aesthetics and unparalleled quality all in a package that is surprisingly affordable. Aberdeen's transitional style allows it to fit into any environment whether it be modular multi-station work areas or executive offices. Aberdeen provides exceptional abrasion and stain resistance along with technology and cable friendly components.

Laminate Options: Cherry, Mocha, and Maple
CARB Compliant: Aberdeen's core materials comply with Phase 2 of CARB's formaldehyde emission limits of composite wood materials.
- All models in all finishes are available on both the Quick-Ship and Fast Freight delivery programs with no quantity limitations.
- Horizontal surfaces feature fluted, PVC edge.

BOW FRONT DESK

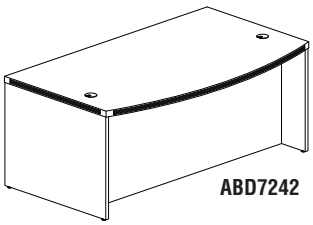
ABD7242

- 1 5/8" thick work surface.
- Modesty panel is recessed 14 1/2" at center.
- Full-height, vertical grain, modesty panel included.
- Two grommets in surface, standard.

Model No.	Description	Dimensions	Wt.	List Price
ABD7242	72" Bowfront Desk	72"W x 42"D x 29 1/2"H	233#	$864
ABD6642	66" Bowfront Desk	66"W x 42"D x 29 1/2"H	220#	$822

CONFERENCE FRONT DESK

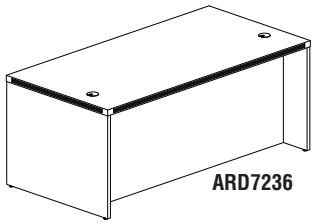
ARD7236

- 1 5/8" thick work surface.
- Full-height, vertical grain, modesty panel included.
- Modesty panel is recessed 8 1/2" at center.
- Two grommets in surface, standard.

Model No.	Description	Dimensions	Wt.	List Price
ARD7236	72" Rectangular Conference Desk	72"W x 36"D x 29 1/2"H	215#	$749

STRAIGHT FRONT DESK

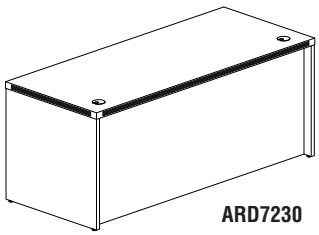
ARD7230

- 1 5/8" thick work surface.
- Full-height, vertical grain, modesty panel included.
- Modesty panel is recessed 2 1/2".
- Two grommets in surface, standard.
- Center drawer will not work with 60" Desk and 2 pedestals or desk and return / bridge.

Model No.	Description	Dimensions	Wt.	List Price
ARD7230	72" Rectangular Desk	72"W x 30"D x 29 1/2"H	188#	$692
ARD6630	66" Rectangular Desk	66"W x 30"D x 29 1/2"H	177#	$647
ARD6030	60" Rectangular Desk	60"W x 30"D x 29 1/2"H	167#	$604

CREDENZA

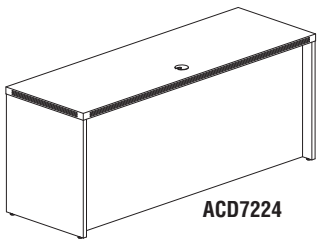
ACD7224

- 1 5/8" thick work surface.
- Full-height, vertical grain, modesty panel included.
- Modesty panel is recessed 3" for outlet clearance.
- One grommet in surface, standard.
- Mouse hole in modesty panel for cable pass through.

Model No.	Description	Dimensions	Wt.	List Price
ACD7224	72" Credenza	72"W x 24"D x 29 1/2"H	160#	$604
ACD6624	66" Credenza	66"W x 24"D x 29 1/2"H	151#	$576
ACD6024	60" Credenza	60"W x 24"D x 29 1/2"H	142#	$547

ABERDEEN LAMINATE SERIES

BRIDGE

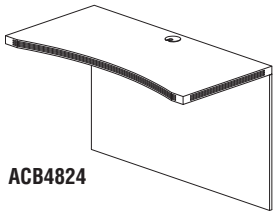
ACB4824

- Universal mounting to right or left side of desk.
- Not free-standing. Requires connection to credenza and desk.
- 1 5/8" thick work surface.
- Full-height, vertical grain modesty panel included.
- Modesty panel is flush.
- One grommet in surface, standard.
- Mouse hole in modesty panel for cable pass through.

Model No.	Description	Dimensions	Wt.	List Price
ACB4824	48" Curved Bridge	48"W x 24"D x 29 1/2"H	74#	$372
ACB4224	42" Curved Bridge	42"W x 24"D x 29 1/2"H	63#	$344

RETURN

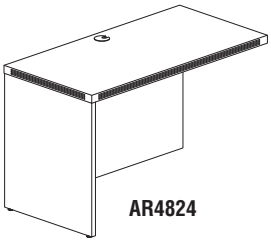
AR4824

- Returns are non-handed.
- Not free-standing. Requires connection to credenza, desk or extended corner.
- Mouse hole in modesty panel for cable pass through.
- Modesty panel is flush.
- One grommet in surface, standard.
- 1 5/8" thick work surface.
- Full-height, vertical grain modesty panel included.

Model No.	Description	Dimensions	Wt.	List Price
AR4824	48" Return	48"W x 24"D x 29 1/2"H	105#	$432
AR4224	42" Return	42"W x 24"D x 29 1/2"H	96#	$389
AR3624	36" Return	36"W x 24"D x 29 1/2"H	87#	$359

EXTENDED CORNER

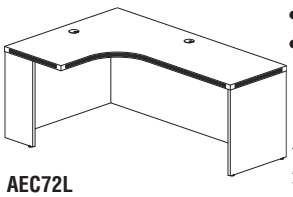
AEC72L

- 1 5/8" thick work surface.
- Full-height, vertical grain, modesty panel included.
- Modesty panel is recessed 3" for outlet clearance on desk side and flush on return side.
- Two grommets in surface, standard.
- Mouse hole in modesty panel (desk side) for cable pass through.

Model No.	Description	Dimensions	Wt.	List Price
AEC72L	72" Left Extended Corner Table	72"W x 48"D x 24"D Return	218#	$965
AEC72R	72" Right Extended Corner Table	72"W x 48"D x 24"D Return	218#	$965

FREESTANDING PENINSULA DESK

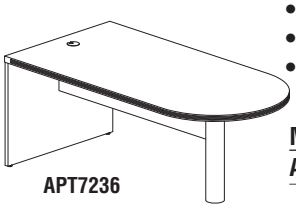
APT7236

- 1 5/8" thick work surface.
- Modesty panel is 12"H.
- One grommet in surface, standard.
- Mouse hole in modesty panel for cable pass through.
- Does not accommodate a center drawer.

Model No.	Description	Dimensions	Wt.	List Price
APT7236	72" Freestanding Peninsula	72"W x 36"D x 29 1/2"H	172#	$834

PENINSULA RETURN

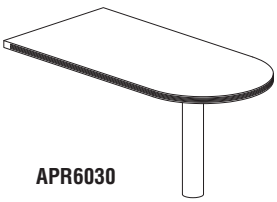
APR6030

- Not free-standing. Requires connection to credenza or desk.
- No grommet.
- No modesty panel.

Model No.	Description	Dimensions	Wt.	List Price
APR6030	60" Peninsula Return	60"W x 30"D x 29 1/2"H	80#	$570

PEDESTAL FILE FOR DESK

APBF26

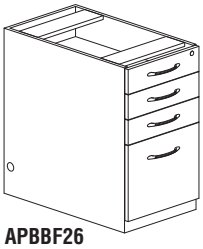

APBBF26

- Pedestals have integrated cable management access at top and bottom of ped.
- Ped tops are unfinished. Must be attached to underside of surface.
- Pedestals feature dual-purpose pencil drawers for storing supplies or storing laptop computers.
- All locks are keyed alike. Lock cores are removable for keying suites individually.
- Curved metal pulls with brushed nickel finish.
- File drawers accommodate letter or legal size hanging file folders.
- Pedestals ship fully assembled.

Model No.	Description	Dimensions	Wt.	List Price
APBF26	Suspended Desk PBF Ped	15 1/4"W x 26 1/2"D x 22 1/2"H	76#	$474
APBBF26	Desk PBBF Ped	15 1/4"W x 26 1/2"D x 27 1/2"H	90#	$647
AFF26	Desk FF Ped	15 1/4"W x 26 1/2"D x 27 1/2"H	86#	$619

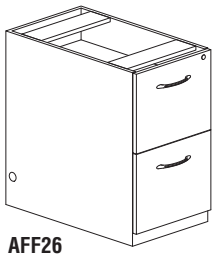

AFF26

PEDESTAL FILE FOR CREDENZA/RETURN/EXTENDED CORNER

APBF20

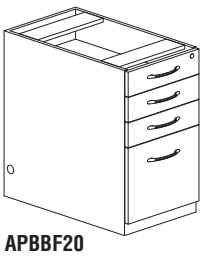

APBBF20

- Pedestals have integrated cable management access at top and bottom of ped.
- Ped tops are unfinished. Must be attached to underside of surface.
- Pedestals feature dual-purpose pencil drawers for storing supplies or storing laptop computers.
- All locks are keyed alike. Lock cores are removable for keying suites individually.
- Mobile kit contains 1" thick surface and five (5) casters to be used for APBF20 only.
- Curved metal pulls with brushed nickel finish.
- File drawers accommodate letter or legal size hanging file folders.
- Pedestals ship fully assembled.

Model No.	Description	Dimensions	Wt.	List Price
APBF20	Suspended Credenza PBF Ped	15 1/4"W x 20"D x 22 1/2 "H	66#	$426
APBBF20	Credenza PBBF Ped	15 1/4"W x 20"D x 27 1/2 "H	75#	$576
AFF20	Credenza FF Ped	15 1/4"W x 20"D x 27 1/2 "H	74#	$547
AMK20	Mobile Kit		14#	$144

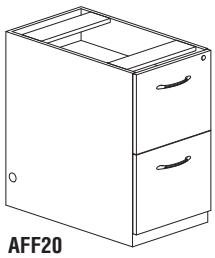

AFF20

ABERDEEN LAMINATE SERIES

LATERAL FILE FOR CREDENZA/RETURN/EXTENDED CORNER

ACLF30

- Credenza Laterals slide easily under any surface.
- Credenza Lateral top is unfinished.
- Drawers can support up to 150 lbs. each.
- Curved metal pulls with brushed nickel finish.
- All locks are keyed alike. Lock cores are removable for keying suites individually.

Model No.	Description	Dimensions	Wt.	List Price
ACLF30	30" Credenza Lateral File	30"W x 20"D x 27 1/2"H	110#	$704
ACLF36	36" Credenza Lateral File	36"W x 20"D x 27 1/2"H	126#	$792

FREESTANDING LATERAL FILE

AFLF30

- 1 5/8" surface allows it to be used alone or next to any credenza or return.
- Drawers can support up to 150 lbs. each.
- Drawers can be configured for front-to-back or side-to-side filing.
- Curved metal pulls with brushed nickel finish.
- All locks are keyed alike. Lock cores are removable for keying suites individually.

Model No.	Description	Dimensions	Wt.	List Price
AFLF30	30" Freestanding Lateral File	30"W x 24"D x 29 1/2"H	201#	$936
AFLF36	36" Freestanding Lateral File	36"W x 24"D x 29 1/2"H	240#	$1007

REPLACEMENT LOCK CORES

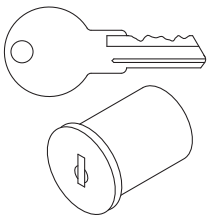

- Allows pedestals and laterals to be keyed uniquely for up to 10 different workstations.
- Master key available.
- Must purchase a core removal tool to change locks cores.

Model No.	Description	Wt.	List Price
REALCC0311 through **REALCC0325** (Silver)	Replacement core with keys	1#	$21
REALCRK	Core removal tool	1#	$22
REALCMK	Master Key	1#	$21

ABERDEEN LAMINATE SERIES

CENTER DRAWER

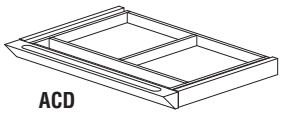

ACD

- Can be used under any worksurface (except APT7236 Peninsula Desk).
- Solid wood frame construction.
- Drawer operates smoothly on full-extension ball bearing suspension.
- Available in graphite with black drawer front only.

Model No.	Description	Dimensions	Wt.	List Price
ACD	Center Drawer	25"W x 18"D x 2"H	32#	$172

KEYBOARD SUPPORTS

- Track is 16" long

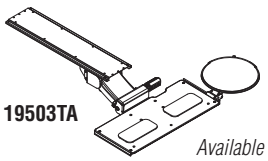

19503TA

Available in Black Only.

Model No.	Description	Wt.	List Price
19503TA	Combination keyboard/mouse platform 19"W x 8 1/4"D, 9"Dia. mouse platform	15#	$570

WALL MOUNT HUTCH

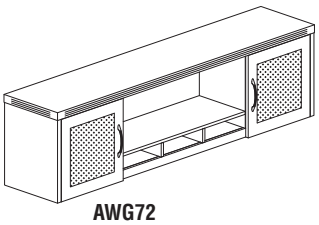

AWG72

- Hutch with two textured glass doors, central opening and pigeon hole slots.
- Central opening sized for binder storage.
- Wall mounting brackets included.
- Curved metal pulls with brushed nickel finish.
- Maximum 150 lb. weight capacity.

Model No.	Description	Dimensions	Wt.	List Price
AWG72	72" Wall Mount Hutch	72"W x 15"D x 19 1/8"H	121#	$709

HUTCH WITH WOOD DOORS

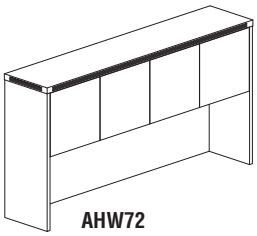

AHW72

- Features four cabinet styled doors with self-closing hinges.
- Back panel features two cable grommets.
- 21 1/2" clearance between work surface and bottom of shelf.
- Accepts optional fabric tack panel and task light.

Model No.	Description	Dimensions	Wt.	List Price
AHW72	72" Hutch with Wood Doors	72"W x 15"D x 39 1/8"H	142#	$720
AHW66	66" Hutch with Wood Doors	66"W x 15"D x 39 1/8"H	134#	$676
AHW60	60" Hutch with Wood Doors	60"W x 15"D x 39 1/8"H	126#	$633

HUTCH WITH GLASS DOORS

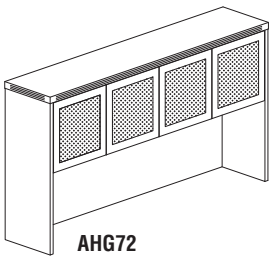

AHG72

- Textured glass highlight cabinet contents and still provide privacy.
- Glass is tempered for safety and durability.
- Features four cabinet styled doors with self-closing hinges.
- Back panel features two cable grommets.
- 21 1/2" clearance between work surface and bottom of shelf.
- Accepts optional fabric tack panel and task light.

Model No.	Description	Dimensions	Wt.	List Price
AHG72	72" Hutch with Glass Doors	72"W x 15"D x 39 1/8"H	142#	$1007

ABERDEEN LAMINATE SERIES

HUTCH TASK LIGHT

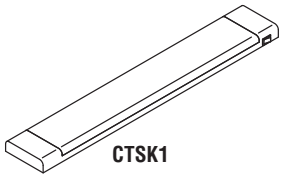

CTSK1

- Task lighting attaches to underside of hutch.
- Uses two energy efficient 13W T5 bulb.
- Includes diffuser lens.

Model No.	Description	Dimensions	Wt.	List Price
CTSK1	Task Light	25"W x 4"D x 1"H	5#	$144

HUTCH TACK PANEL

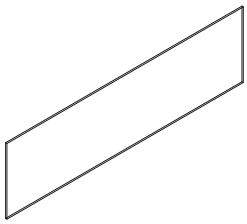

AFTP72

- Tack panel attaches to hutch back panel using adhesive tape.
- Allows for access to the hutch's grommet for cable management.
- Available in Black fabric only.

Model No.	Description	Dimensions	Wt.	List Price
AFTP72	72" Fabric Tack Panel	69 3/4"W x 1/2"D x 19 1/4"H	6#	$201
AFTP66	66" Fabric Tack Panel	63 3/4"W x 1/2"D x 19 1/4"H	6#	$172
AFTP60	60" Fabric Tack Panel	57 3/4"W x 1/2"D x 19 1/4"H	5#	$156

PAPER MANAGEMENT ORGANIZERS

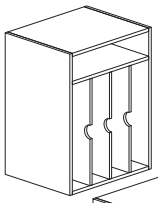

AVPM

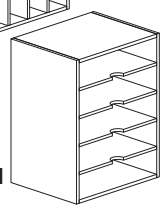

AHPM

- Pigeon hole slots can accommodate "legal" sized documents.
- Sized to fit under hutch.

Model No.	Description	Dimensions	Wt.	List Price
AVPM	Vertical Paper Management	15"W x 11 3/4"D x 20 1/4"H	31#	$201
AHPM	Horizontal Paper Management	15"W x 11 3/4"D x 20 1/4"H	32#	$201

BOOKCASES

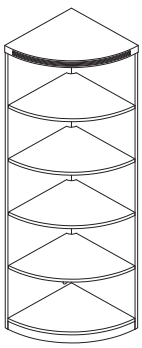

ABQ5

- Shelves are adjustable on 1 1/4" increments with 5" of total adjustment.
- Shelves contain corner mouse holes for vertical cable management.
- Back panel provides grommet for wall access.
- Quarter Round Bookcase shelves support 25 lbs per shelf.
- Standard Bookcases support 75 lbs per shelf evenly distributed.

Model No.	Description	Dimensions	Wt.	List Price
ABQ5	5 Shelf Quarter Round (1 fixed shelf)	18"W x 18"D x 68 3/4"H	108#	$547
ABQ2	2 Shelf Quarter Round (1 fixed shelf)	18"W x 18"D x 29 1/2"H	80#	$286
AB5S36	5 Shelf Bookcase (1 fixed shelf)	36"W x 15"D x 68 3/4"H	175#	$676
AB3S36	3 Shelf Bookcase	36"W x 15"D x 39 1/8"H	117#	$561
AB2S36	2 Shelf Bookcase	36"W x 15"D x 29 1/2"H	93#	$460

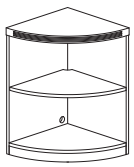

ABQ2

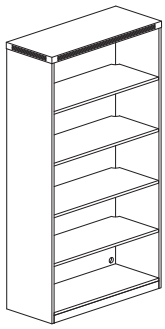

AB5S36

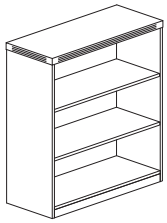

AB3S36

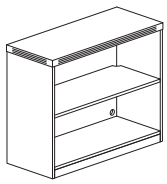

AB2S36

PERSONAL STORAGE TOWER

APST

- Includes 7 3/4" wardrobe section with a hanging rod and 4 adjustable shelves.
- Storage section includes two adjustable shelves on 1 1/4" increments with a total of 5" of adjustment.
- File section includes two file drawers.
- Curved metal pulls with brushed nickel finish. Additional pull options available.
- Ships in two cartons.

Model No.	Description	Dimensions	Wt.	List Price
APST	Personal Storage Tower	24"W x 24"D x 68 3/4"H	248#	$1152

GLASS DISPLAY CABINET

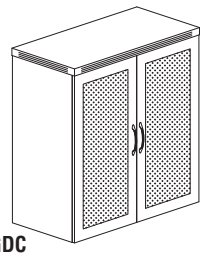

AGDC

- Textured glass highlight cabinet contents and still provide privacy.
- Glass is tempered for safety and durability.
- Two (2) adjustable shelves on 1 1/4" increments with a total of 5" of adjustment.
- Curved metal pulls with brushed nickel finish. Additional pull options available.
- Grommet in back panel for wall access.
- Mouse hole in shelf to permit vertical routing of cables.

Model No.	Description	Dimensions	Wt.	List Price
AGDC	Glass Display Cabinet	36"W x 18"D x 39 1/4"H	135#	$936

STORAGE CABINET

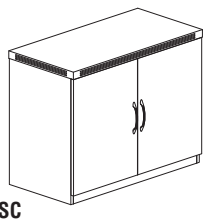

ASC

- Self-closing hinged doors.
- One shelf adjustable on 1 1/4" increments with a total of 5" of adjustment.
- Shelf contains corner mouse hole for vertical cable management.
- Mouse hole in back panel for wall access.
- Curved metal pulls with brushed nickel finish. Additional pull options available.

Model No.	Description	Dimensions	Wt.	List Price
ASC	Storage Cabinet	36"W x 18"D x 29 1/2"H	132#	$720

LOW WALL CABINET

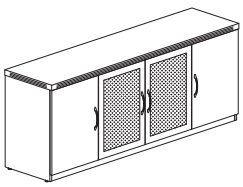

ALC

- Self-closing hinged doors.
- One shelf per compartment adjustable on 1 1/4" increments with a total of 5" of adjustment. (3 shelves total)
- Shelves contain corner mouse hole for vertical cable management.
- Mouse hole in back panel for wall access.
- Curved metal pulls with brushed nickel finish standard. Also includes Brighton handles. Additional pull options available.

Model No.	Description	Dimensions	Wt.	List Price
ALC	Low Wall Cabinet	72"W x 18"D x 29 1/2"H	173#	$1297

RECEPTION ACCESSORIES

ARDTC

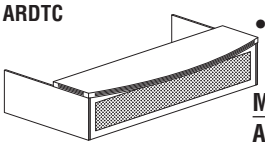

- For main reception desk. To be used on ARD7236.
- Textured glass front panel.
- 1 5/8" thick bow front transaction counter. 6" overhang.
- Transaction counter measures 72"H x 21"D x 15 5/8"H.

Model No.	Description	Dimensions	Wt.	List Price
ARDTC	72" Reception Transaction Counter	72"W x 42"D x 15 5/8"H	113#	$676

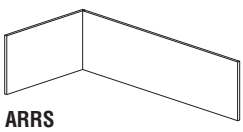

ARRS

- To be used on top of desk return AR4824.
- Reception screen is symmetrical and non-handed.

Model No.	Description	Dimensions	Wt.	List Price
ARRS	48" Reception Return Screen	48"W x 24"D x 14"H	28#	$228

ABERDEEN LAMINATE SERIES

CONFERENCE TABLES

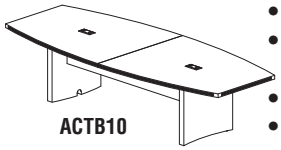
ACTB10

- 1 5/8" thick work surface.
- Surfaces feature hollow core construction.
- Boat-shaped conference tables standard with two grommets (6' has one centered grommet, 18' has 3 grommets).
- Boat-shaped conference tables accept power module for power and data access to operate computers and presentation equipment during meetings.
- Round conference tables have one round grommet.
- Conference table legs have cable chimney for concealed cable management from surface to floor.
- Tops larger than 96" have multi-piece top surfaces connected via steel cam post and steel connecting plates.
- Large conference tables ship in multiple cartons.
- Structural modesty panel conceals horizontal cable management.

ACTR42

Model No.	Description	Dimensions	Wt.	List Price
ACTB18	18' Conference Table, Boat Surface	216"W x 48"D x 29 1/2"H	650#	$3432
ACTB12	12' Conference Table, Boat Surface	144"W x 48"D x 29 1/2"H	500#	$1994
ACTB10	10' Conference Table, Boat Surface	120"W x 48"D x 29 1/2"H	416#	$1668
ACTB8	8' Conference Table, Boat Surface	96"W x 48"D x 29 1/2"H	344#	$1379
ACTB6	6' Conference Table, Boat Surface	72"W x 36"D x 29 1/2"H	233#	$951
ACTR42	42" Round Conference Table	42"Dia x 29 1/2"H	105#	$671

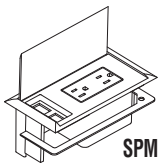
SPM

Model No.	Description	List Price
SPM UL LISTED	6 1/4"W x 4"D x 1 1/2"H Optional Power Module, UL Listed [includes RJ11-Cat 3 coupler (phone) and RJ45 coupler (data)] – 6' power cord	$284

CONFERENCE ACCESSORIES

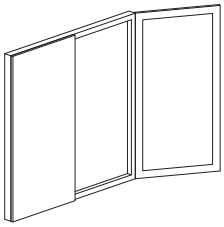
AVPB

- White dry-erase board in center panel that features magnetic, non-ghosting surface.
- Marker board can be used for projection.
- Sculpted lower tray holds markers, erasers, etc.
- Inside face of doors covered in tackable black fabric.
- Wall mounting brackets included.

Model No.	Description	Dimensions	Wt.	List Price
AVPB	Visual Presentation Board	48"W x 2 3/8"D x 48"H	80#	$892

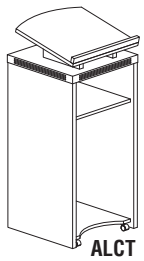
ALCT

- One fixed shelf.
- Four casters concealed in lectern base, non-locking.
- Angled stand has stop to prevent papers from sliding.
- Top surface has a grommet for cable pass-through.

Model No.	Description	Dimensions	Wt.	List Price
ALCT	Lectern	18"W x 18"D x 44"H	78#	$517

ABERDEEN LAMINATE SERIES TYPICALS

- Order complete suites using “AT__” models.

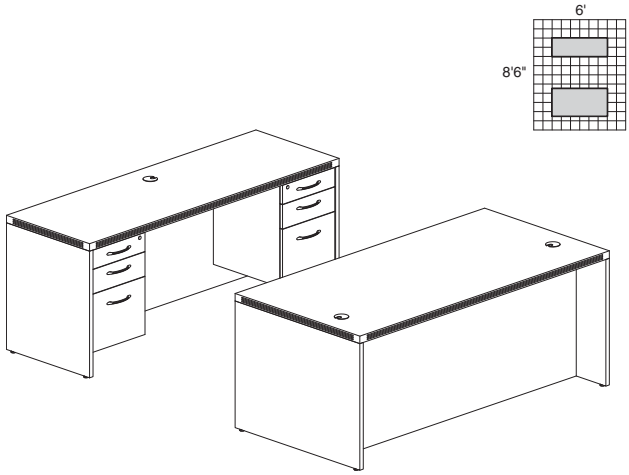

ABERDEEN TYPICAL #1

Consists of:

QTY.	MODEL NO.	DESCRIPTION	LIST PRICE EACH
1	**ARD7236**	Rectangular Conference Desk 72"W x 36"D	$749
1	**ACD7224**	Credenza 72"W x 24"D	$604
2	**APBF26**	Suspended Desk Pencil/Box/File Pedestal	$474
2	**APBF20**	Suspended Credenza Pencil/Box/File Pedestal	$426

AT1 **TOTAL: $3153**

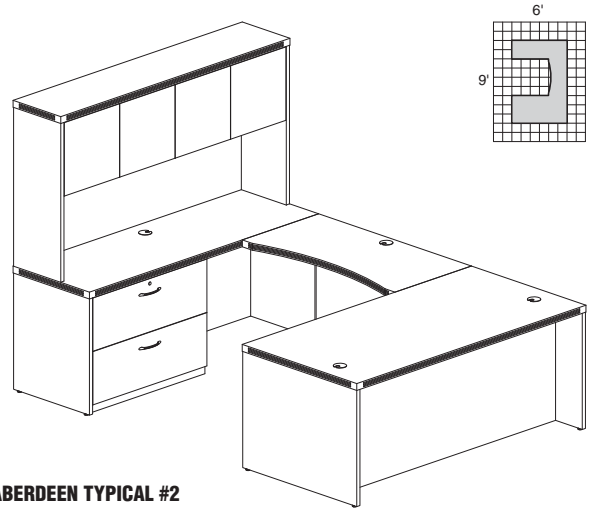

ABERDEEN TYPICAL #2

Consists of:

QTY.	MODEL NO.	DESCRIPTION	LIST PRICE EACH
1	**ARD7236**	Rectangular Conference Desk 72"W x 36"D	$749
1	**ACD7224**	Credenza 72"W x 24"D	$604
1	**ACB4824**	Contour Bridge 48"W x 24"D	$372
1	**APBF26**	Suspended Desk Pencil/Box/File Pedestal	$474
1	**ACLF36**	Credenza Lateral File 36"W x 20"D	$792
1	**AHW72**	Hutch with Wood Doors 72"W	$720

AT2 **TOTAL: $3711**

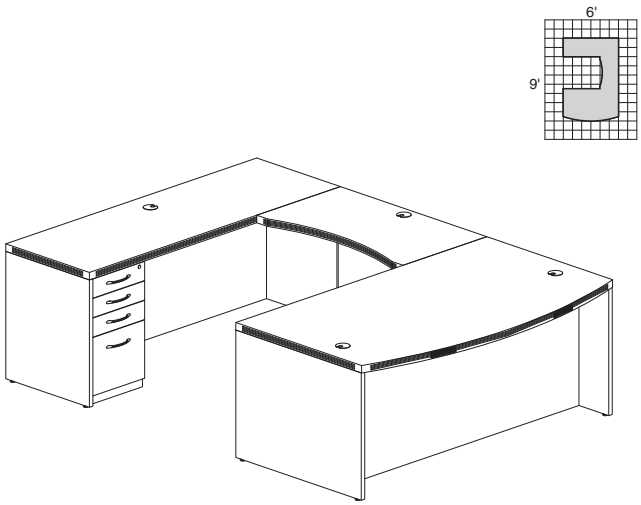

ABERDEEN TYPICAL #3

Consists of:

QTY.	MODEL NO.	DESCRIPTION	LIST PRICE EACH
1	**ABD7242**	Bowfront Desk 72"W x 42"D	$864
1	**ACD7224**	Credenza 72"W x 24"D	$604
1	**ACB4224**	Contour Bridge 42"W x 24"D	$344
1	**APBBF26**	Desk Pencil/Box/Box/File Pedestal	$647
1	**APBBF20**	Credenza Pencil/Box/Box/File Pedestal	$576

AT3 **TOTAL: $3035**

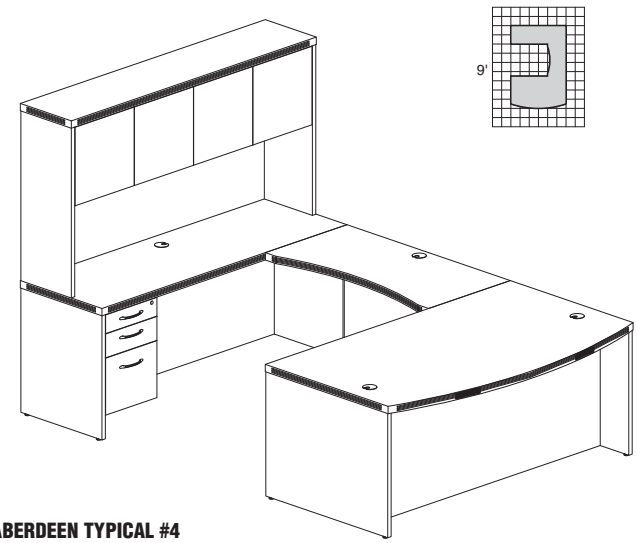

ABERDEEN TYPICAL #4

Consists of:

QTY.	MODEL NO.	DESCRIPTION	LIST PRICE EACH
1	**ABD7242**	Bowfront Desk 72"W x 42"D	$864
1	**ACD7224**	Credenza 72"W x 24"D	$604
1	**ACB4824**	Contour Bridge 48"W x 24"D	$372
1	**APBF26**	Suspended Desk Pencil/Box/File Pedestal	$474
1	**APBF20**	Suspended Credenza Pencil/Box/File Pedestal	$426
1	**AHW72**	Hutch with Wood Doors 72"W	$720

AT4 **TOTAL: $3460**

ABERDEEN LAMINATE TYPICALS

- Order complete suites using "AT__" models.

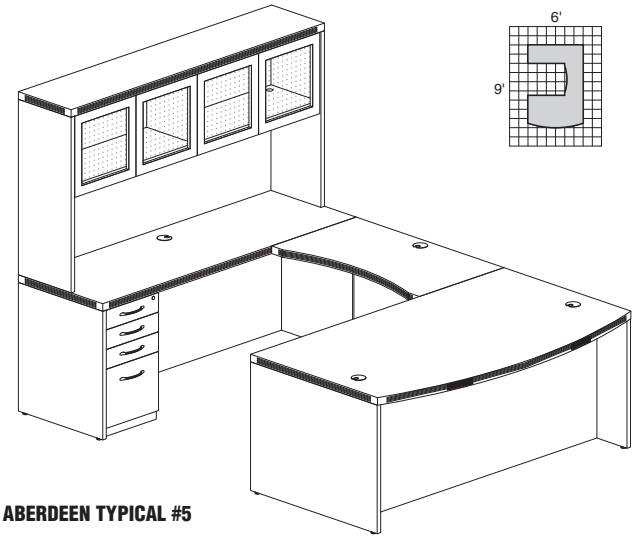

ABERDEEN TYPICAL #5

Consists of:

QTY.	MODEL NO.	DESCRIPTION	LIST PRICE EACH
1	**ABD7242**	Bowfront Desk 72"W x 42"D	$864
1	**ACD7224**	Credenza 72"W x 24"D	$604
1	**ACB4224**	Contour Bridge 42"W x 24"D	$344
1	**APBBF26**	Desk Pencil/Box/Box/File Pedestal	$647
1	**APBBF20**	Credenza Pencil/Box/Box/File Pedestal	$576
1	**AHG72**	Hutch with Glass Doors 72"W	$1007

AT5 **TOTAL: $4042**

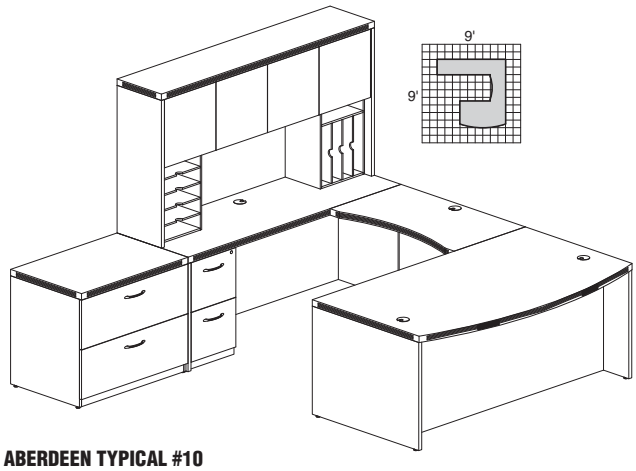

ABERDEEN TYPICAL #10

Consists of:

QTY.	MODEL NO.	DESCRIPTION	LIST PRICE EACH
1	**ABD7242**	Bowfront Desk 72"W x 42"D	$864
1	**ACB4224**	Contour Bridge 42"W x 24"D	$344
1	**ACD7224**	Credenza 72"W x 24"D	$604
1	**APBBF26**	Desk Pencil/Box/Box/File Pedestal	$647
1	**AFF20**	Credenza File/File Pedestal	$547
1	**AFLF36**	Freestanding Lateral File 36"W x 24"D	$1007
1	**AHW72**	Hutch with Wood Doors 72"W	$720
1	**AHPM**	Horizontal Paper Management	$201
1	**AVPM**	Vertical Paper Management	$201

AT10 **TOTAL: $5135**

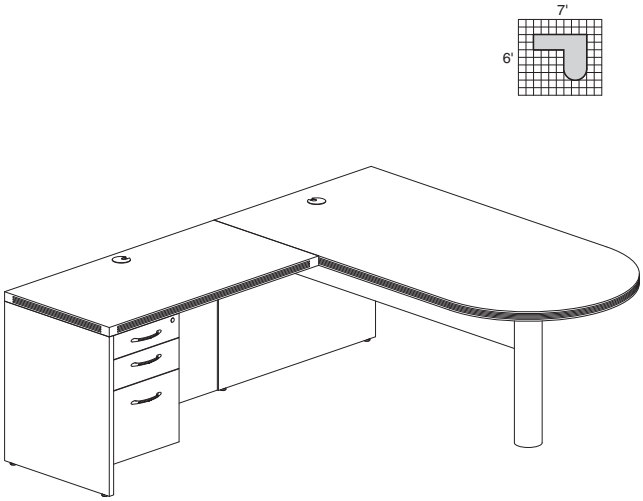

ABERDEEN TYPICAL #11

Consists of:

QTY.	MODEL NO.	DESCRIPTION	LIST PRICE EACH
1	**APT7236**	Freestanding Peninsula 72"W x 36"D	$834
1	**AR4824**	Return 48"W x 24"D	$432
1	**APBF20**	Suspended Credenza Pencil/Box/File Pedestal	$426

AT11 **TOTAL: $1692**

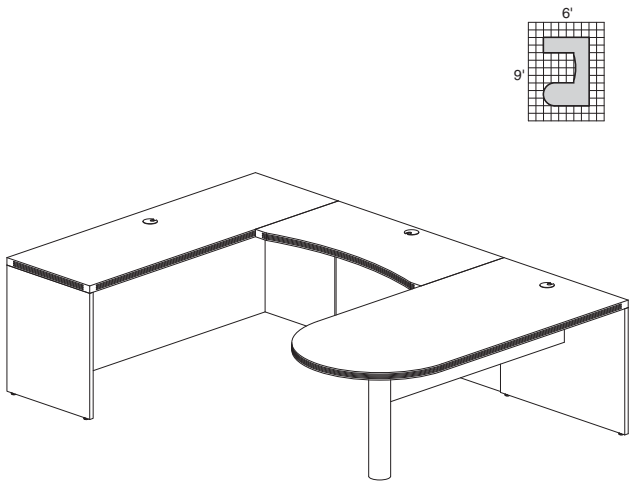

ABERDEEN TYPICAL #14

Consists of:

QTY.	MODEL NO.	DESCRIPTION	LIST PRICE EACH
1	**APT7236**	Freestanding Peninsula 72"W x 36"D	$834
1	**ACB4824**	Contour Bridge 48"W x 24"D	$372
1	**ACD7224**	Credenza 72"W x 24"D	$604

AT14 **TOTAL: $1810**

ABERDEEN LAMINATE TYPICALS

- Order complete suites using "AT__" models.

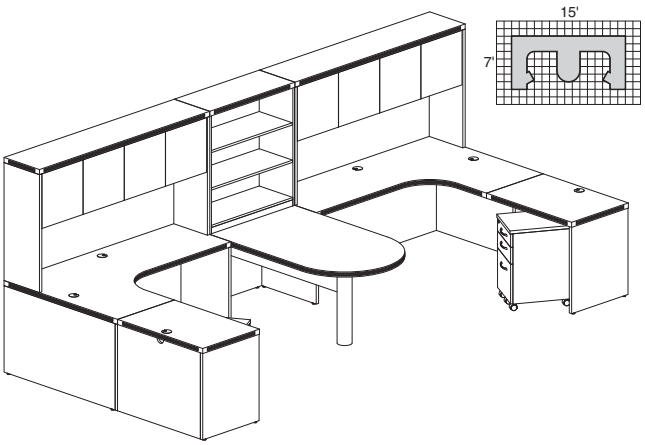

ABERDEEN TYPICAL #17

Consists of:

QTY.	MODEL NO.	DESCRIPTION	LIST PRICE EACH
1	**APT7236**	Freestanding Peninsula 72"W x 36"D	$834
1	**AEC72R**	Extended Corner, Right 72"W x 48"D	$965
1	**AEC72L**	Extended Corner, Left 72"W x 48"D	$965
2	**AR3624**	Return 36"W x 24"D	$359
2	**APBF20**	Suspended Credenza Pencil/Box/File Pedestal	$426
2	**AMK20**	Mobile Kit for Suspended Credenza Pedestal	$144
2	**AHW72**	Hutch with Wood Doors 72"W	$720
1	**AB3S36**	3-Shelf Bookcase	$561

AT17 **TOTAL: $6623**

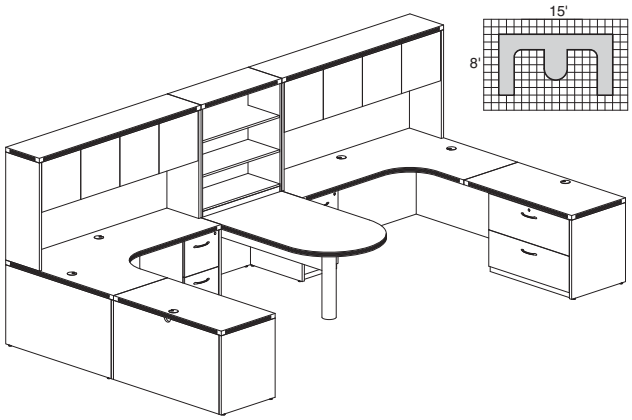

ABERDEEN TYPICAL #18

Consists of:

QTY.	MODEL NO.	DESCRIPTION	LIST PRICE EACH
1	**APT7236**	Freestanding Peninsula 72"W x 36"D	$834
1	**AEC72R**	Extended Corner, Right 72"W x 48"D	$965
1	**AEC72L**	Extended Corner, Left 72"W x 48"D	$965
2	**AFTP72**	72" Fabric Tack Panel	$201
2	**AR4824**	Return 48"W x 24"D	$432
2	**AFF20**	Suspended Credenza Pencil/box/File Pedestal	$547
2	**ACLF36**	Credenza Lateral File 36"W x 20"D	$792
2	**AHW72**	Hutch with Wood Doors 72"W	$720
1	**AB3S36**	3-Shelf Bookcase	$561

AT18 **TOTAL: $8709**

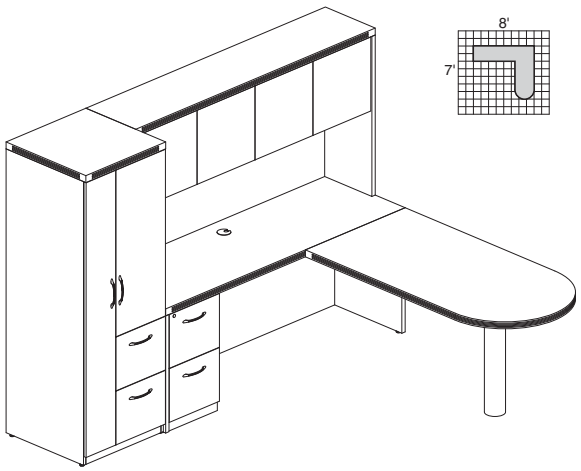

ABERDEEN TYPICAL #22

Consists of:

QTY.	MODEL NO.	DESCRIPTION	LIST PRICE EACH
1	**APR6030**	Peninsula Return 60"W x 30"D	$570
1	**ACD7224**	Credenza 72"W x 24"D	$604
1	**AFF20**	Credenza File/File Pedestal	$547
1	**APST**	Personal Storage Tower	$1152
1	**AHW72**	Hutch with Wood Doors 72"W	$720

AT22 **TOTAL: $3593**

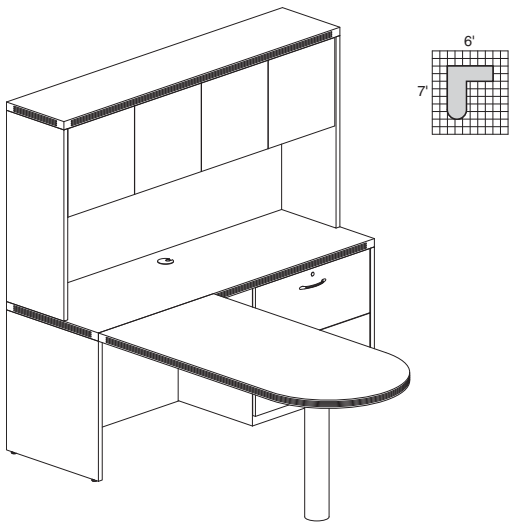

ABERDEEN TYPICAL #24

Consists of:

QTY.	MODEL NO.	DESCRIPTION	LIST PRICE EACH
1	**APR6030**	Peninsula Return 60"W x 30"D	$570
1	**ACD7224**	Credenza 72"W x 24"D	$604
1	**ACLF30**	Credenza Lateral File 30"W x 20"D	$704
1	**AHW72**	Hutch with Wood Doors 72"W	$720

AT24 **TOTAL: $2598**

ABERDEEN LAMINATE TYPICALS

- Order complete suites using "AT__" models.

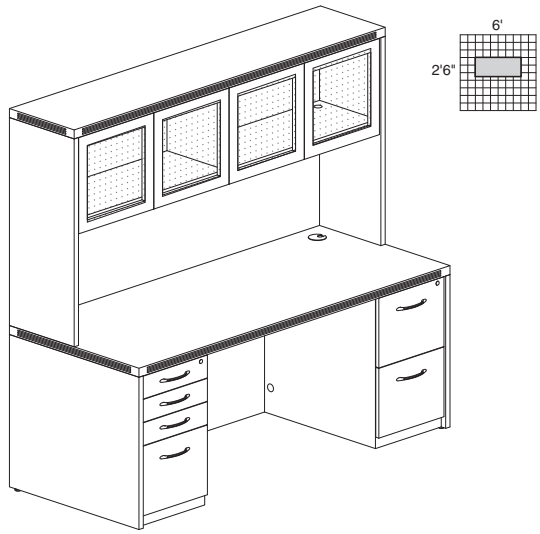

ABERDEEN TYPICAL #34

Consists of:

QTY.	MODEL NO.	DESCRIPTION	LIST PRICE EACH
1	**ARD7230**	Rectangular Desk 72"W x 30"D	$692
1	**APBBF26**	Desk Pencil/Box/Box/File Pedestal	$647
1	**AFF26**	Desk File/File Pedestal	$619
1	**AHG72**	Hutch with Glass Doors 72"W	$1007

AT34 **TOTAL: $2965**

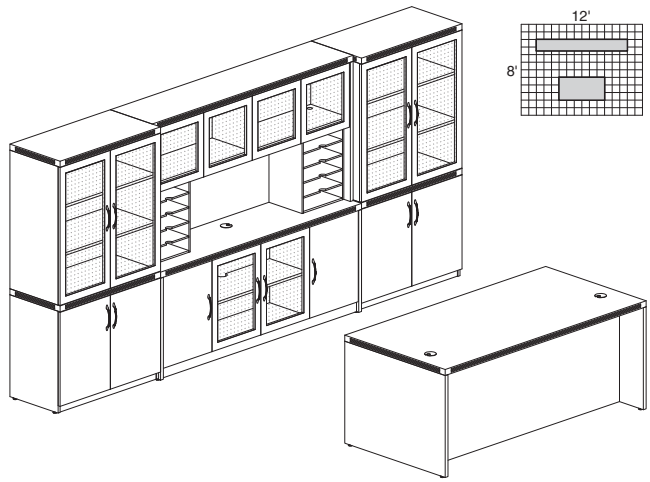

ABERDEEN TYPICAL #35

Consists of:

QTY.	MODEL NO.	DESCRIPTION	LIST PRICE EACH
1	**ARD7236**	Rectangular conference Desk 72"W x 36"D	$749
1	**APBBF26**	Desk Pencil/Box/Box/File Pedestal	$647
1	**AFF26**	Desk File/File Pedestal	$619
1	**ALC**	Low Wall Cabinet	$1297
2	**ASC**	Storage Cabinet	$720
2	**AGDC**	Glass Display Cabinet	$936
1	**AHG72**	Hutch with Glass Doors 72"W	$1007
2	**AHPM**	Horizontal Paper Management	$201

AT35 **TOTAL: $8033**

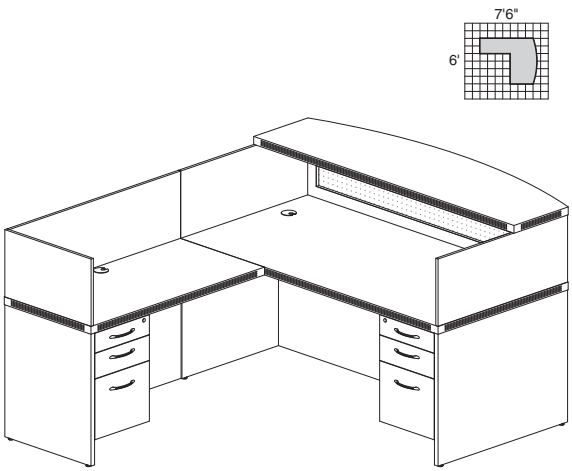

ABERDEEN TYPICAL #36

Consists of:

QTY.	MODEL NO.	DESCRIPTION	LIST PRICE EACH
1	**ARD7236**	Rectangular Conference Desk 72"W x 36"D	$749
1	**AR4824**	Return 48"W x 24"D	$432
1	**APBF20**	Suspended Credenza Pencil/Box/File Pedestal	$426
1	**APBF26**	Suspended Desk Pencil/Box/File Pedestal	$474
1	**ARDTC**	Reception Desk Transaction Counter	$676
1	**ARRS**	Reception Return Screen	$228

AT36 **TOTAL: $2985**

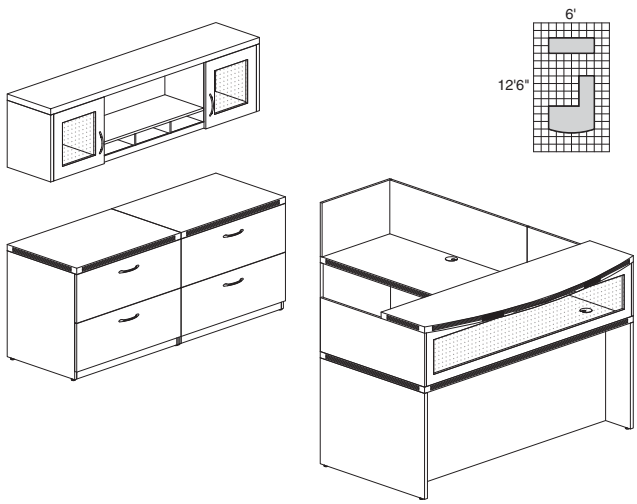

ABERDEEN TYPICAL #37

Consists of:

QTY.	MODEL NO.	DESCRIPTION	LIST PRICE EACH
1	**ARD7236**	Rectangular Conference Desk 72"W x 36"D	$749
1	**AR4824**	Return 48"W x 24"D	$432
1	**ARDTC**	Reception Desk Transaction Counter	$676
1	**ARRS**	Reception Return Screen	$228
2	**AFLF36**	Freestanding Lateral File 36"W x 24"D	$1007
1	**AWG72**	Wall Mount Hutch 72"W	$709

AT37 **TOTAL: $5251**

ABERDEEN LAMINATE TYPICALS

- Order complete suites using “AT__” models.

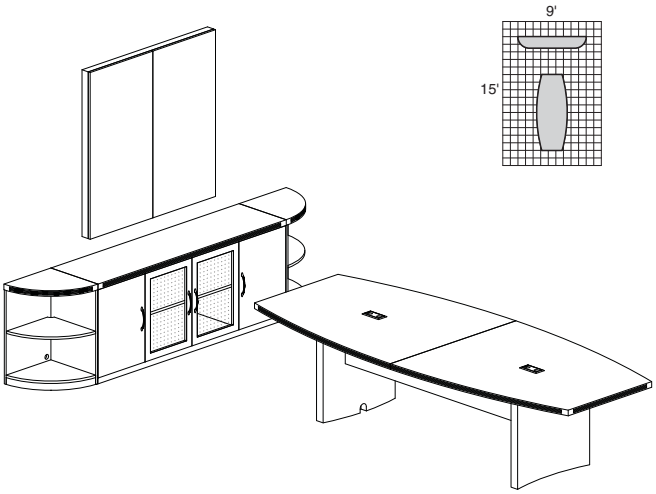

ABERDEEN TYPICAL #39

Consists of:

QTY.	MODEL NO.	DESCRIPTION	LIST PRICE EACH
1	**ACTB10**	Boat Conference Table 120"W x 48"D	$1668
1	**ALC**	Low Wall Cabinet	$1297
2	**ABQ2**	2-Shelf 1/4 Round	$286
1	**AVPB**	Visual Presentation Board	$892

AT39 **TOTAL: $4429**

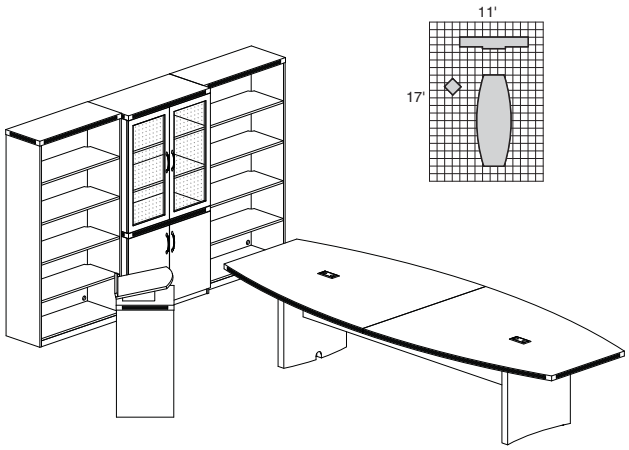

ABERDEEN TYPICAL #40

Consists of:

QTY.	MODEL NO.	DESCRIPTION	LIST PRICE EACH
1	**ACTB12**	Boat Conference Table 144"W x 48"D	$1994
1	**ASC**	Storage Cabinet	$720
1	**AGDC**	Glass Display Cabinet	$936
2	**AB5S36**	5-Shelf Bookcase	$676
1	**ALCT**	Lectern	$517

AT40 **TOTAL: $5519**

BRIGHTON LAMINATE SERIES

Intertek GIZA/CAP FAST Freight QUICK-SHIP

The Brighton Series is Mayline's most affordable, complete line of casegoods. With all laminate construction, it provides the durability and affordability you would expect, but with an added sense of style. Brighton offers matching Cherry and Mocha finishes to our higher end Aberdeen Series line, allowing you to specify for different levels within an organization.

Laminate Options: Cherry and Mocha.
CARB Compliant: Brighton's core materials comply with Phase 2 of CARB's formaldehyde emission limits of composite wood materials.
- All models in all finishes are available on both the Quick-Ship and Fast Freight delivery programs with no quantity limitations.
- Horizontal Surfaces feature PVC edge.

BOW FRONT DESK

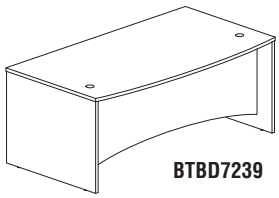
BTBD7239

- 1" thick work surface.
- Modesty panel is recessed 9" at center.
- 3/4 height arched modesty panel included.
- Two black grommets in surface, standard. Additional grommet options available.

Model No.	Description	Dimensions	Wt.	List Price
BTBD7239	72" Bowfront Desk	72"W x 39"D x 29"H	148#	$538

RECTANGULAR CONFERENCE DESK

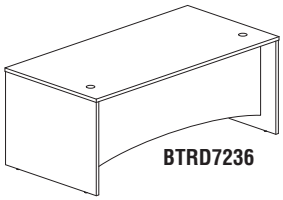
BTRD7236

- 1" thick work surface.
- 3/4 height arched modesty panel included.
- Modesty panel is recessed 6".
- Two black grommets in surface, standard. Additional grommet options available.

Model No.	Description	Dimensions	Wt.	List Price
BTRD7236	72" Rectangular Conference Desk	72"W x 36"D x 29"H	151#	$517

Model No.	Description	Dimensions	Wt.	List Price
BTRD7230	72" Rectangular Desk	72"W x 30"D x 29"H	128#	$458
BTRD6630	66" Rectangular Desk	66"W x 30"D x 29"H	102#	$420
BTRD6030	60" Rectangular Desk	60"W x 30"D x 29"H	100#	$395

CREDENZA

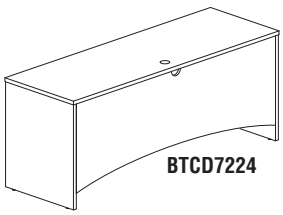
BTCD7224

- 1" thick work surface.
- 3/4 height arched modesty panel included.
- One black grommet in surface, standard. Additional grommet options available.
- Mouse hole in modesty panel for cable pass through.

Model No.	Description	Dimensions	Wt.	List Price
BTCD7224	72" Credenza	72"W x 24"D x 29"H	104#	$405
BTCD6624	66" Credenza	66"W x 24"D x 29"H	98#	$378
BTCD6024	60" Credenza	60"W x 24"D x 29"H	90#	$356

BRIDGE

BTB4824

- Non-handed, mounts to either left or right side of desk.
- Not free-standing. Requires connection to credenza and desk.
- 1" thick work surface.
- 3/4 height arched modesty panel included.
- One black grommet in surface, standard. Additional grommet options available.

Model No.	Description	Dimensions	Wt.	List Price
BTB4824	48" Curved Bridge	48"W x 24"D x 29"H	49#	$232
BTB4224	42" Curved Bridge	42"W x 24"D x 29"H	44#	$211
BTB3624	36" Curved Bridge	36"W x 24"D x 29"H	40#	$190

RETURN

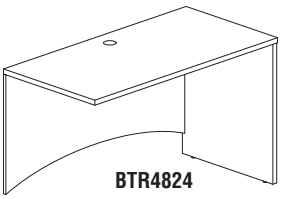
BTR4824

- Non-handed, mounts to either left or right side of desk.
- Not free-standing. Requires connection to credenza or desk.
- 1" thick work surface.
- 3/4 height arched modesty panel included.
- One black grommet in surface, standard. Additional grommet options available.

Model No.	Description	Dimensions	Wt.	List Price
BTR4824	48" Return	48"W x 24"D x 29"H	68#	$274
BTR4224	42" Return	42"W x 24"D x 29"H	60#	$258
BTR3624	36" Return	36"W x 24"D x 29"H	54#	$238

BRIGHTON LAMINATE SERIES

FREESTANDING PENINSULA DESK

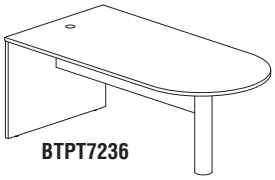

BTPT7236

- 1" thick work surface.
- Modesty panel is 12"H.
- One black grommet in surface, standard. Additional grommet options available.
- Mouse hole in modesty panel for cable pass through.
- Does not accommodate a center drawer.

Model No.	Description	Dimensions	Wt.	List Price
BTPT7236	72" Freestanding Peninsula	72"W x 36"D x 29"H	115#	$700

SUSPENDED PEDESTAL FILE

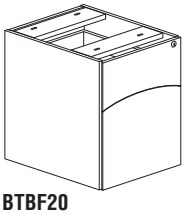

BTBF20

- Attaches to all desks, credenzas and returns.
- Ped tops are unfinished. Must be attached to underside of surface.
- All locks are keyed alike. Lock cores are removable for keying suites individually.
- File drawers accommodate letter or legal size hanging file folders.
- Pedestals ship fully assembled.

Model No.	Description	Dimensions	Wt.	List Price
BTBF20	Suspended Desk BF Ped	15 3/4"W x 19 1/2"D x 20"H	56#	$346

MOBILE PEDESTAL FILE

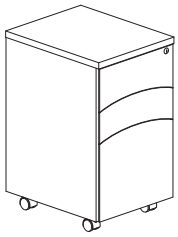

BTBBF20M

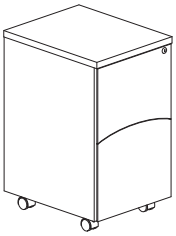

BTFF20M

- File drawers accommodate letter or legal size hanging folders.
- All locks are keyed alike. Lock cores are removable for keying suites individually.
- Pedestals ship fully assembled.
- Designed to work with hanging box bottom and/or hanging pockets.
  Note: Some tabs on standard folders may not fit in top drawer due to the limited height this design requires.

Model No.	Description	Dimensions	Wt.	List Price
BTBBF20M	Mobile BBF Ped	15 3/4"W x 19 1/2"D x 27 3/4"H	74#	$464
BTFF20M	Mobile FF Ped	15 3/4"W x 19 1/2"D x 27 3/4"H	71#	$415

FREESTANDING LATERAL FILE

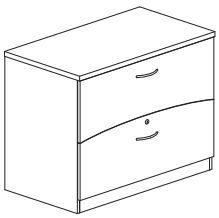

BTFLF36

- 1" surface removable for use under desk surfaces.
- Drawers can be configured for front-to-back or side-to-side filing.
- All locks are keyed alike. Lock cores are removable for keying workstations individually.
- Drawers can support up to 75 lbs. each.
- Black pulls standard. Additional pull options available.

Model No.	Description	Dimensions	Wt.	List Price
BTFLF36	36" Freestanding Lateral File	36"W x 20"D x 29"H	157#	$803

REPLACEMENT LOCK CORES

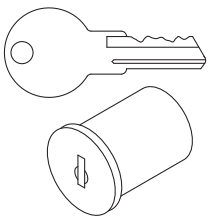

- Allows pedestals and laterals to be keyed uniquely for up to 10 different workstations.
- Master key available.
- Must purchase a core removal tool to change locks cores.

Model No.	Description	Wt.	List Price
REALCC0311B through **REALCC0325B** (Black)	Replacement core with keys	1#	$21
REALCRK	Core removal tool	1#	$22
REALCMK	Master Key	1#	$21

BRIGHTON LAMINATE SERIES

CENTER DRAWER

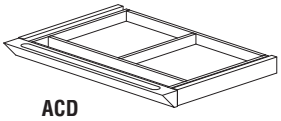
ACD

- Can be used under any worksurface (except BTPT7236 Peninsula Desk).
- Solid wood frame construction.
- Drawer operates smoothly on full-extension ball bearing suspension.
- Available in graphite with black drawer front only.

Model No.	Description	Dimensions	Wt.	List Price
ACD	Center Drawer	25"W x 18"D x 2"H	11#	$172

KEYBOARD SUPPORTS

- Track is 16" long

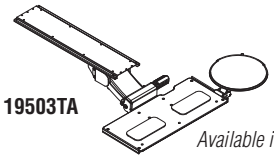
19503TA

Available in Black Only.

Model No.	Description	Wt.	List Price
19503TA	Combination keyboard/mouse platform 19"W x 8 1/4"D, 9"Dia. mouse platform	15#	$570

HUTCH WITH WOOD DOORS

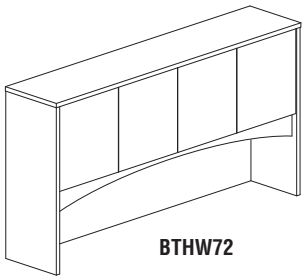
BTHW72

- Features four cabinet styled doors with self-closing hinges.
- Back panel features two cable grommets for wall access.
- Under shelf clearance ranges from 14" on sides to 18" in center.
- Accepts optional fabric tack panel and task light.

Model No.	Description	Dimensions	Wt.	List Price
BTHW72	72" Hutch with Wood Doors	72"W x 15"D x 39 1/2"H	165#	$624
BTHW66	66" Hutch with Wood Doors	66"W x 15"D x 39 1/2"H	154#	$597
BTHW60	60" Hutch with Wood Doors	60"W x 15"D x 39 1/2"H	130#	$563

DOUBLE HEIGHT HUTCH WITH GLASS DOORS

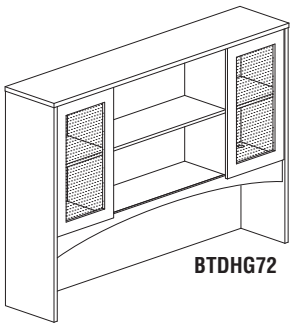
BTDHG72

- Frosted glass highlights cabinet contents and still provides privacy.
- Glass is tempered for safety and durability.
- Features two cabinet styled doors with self-closing hinges.
- Center of hutch has two open shelves, one adjustable.
- Back panel features two cable grommets for wall access.
- Under shelf clearance ranges from 14" on sides to 18" in center.
- Accepts optional fabric tack panel and task light.

Model No.	Description	Dimensions	Wt.	List Price
BTDHG72	72" Hutch with Glass Doors	72"W x 15"D x 50 1/2"H	209#	$826

PAPER MANAGEMENT ORGANIZER

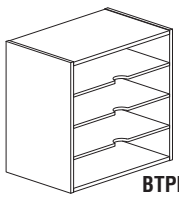
BTPM

- Pigeon hole slots can accommodate legal sized documents.
- Sized to fit under hutch vertically or horizontally.

Model No.	Description	Dimensions	Wt.	List Price
BTPM	Paper Manager	16 3/4"W x 10 5/8"D x 16 3/4"H	20#	$165

HUTCH TASK LIGHT

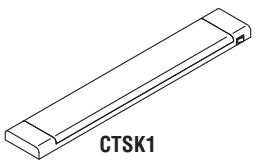
CTSK1

- Task lighting attaches to underside of hutch.
- Uses two energy efficient 13W T5 bulbs.
- Includes diffuser lens.
- 10 ft. power cord.

Model No.	Description	Dimensions	Wt.	List Price
CTSK1	Task Light	25"W x 4"D x 1"H	1#	$144

BRIGHTON LAMINATE SERIES

HUTCH TACK PANEL

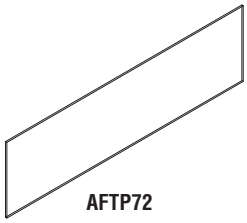

AFTP72

- Tack panel attaches to hutch back panel using adhesive tape.
- Allows for access to the hutch's grommets for cable management.
- Available in Black fabric only.

Model No.	Description	Dimensions	Wt.	List Price
AFTP72	72" Fabric Tack Panel	69 3/4"W x 1/2"D x 19 1/4"H	6#	$201
AFTP66	66" Fabric Tack Panel	63 3/4"W x 1/2"D x 19 1/4"H	6#	$172
AFTP60	60" Fabric Tack Panel	57 3/4"W x 1/2"D x 19 1/4"H	5#	$156

BOOKCASES

- Shelves are adjustable in 1 1/4" increments. Each shelf has 7 1/2" of total adjustment.
- Shelves contain corner mouse hole for vertical cable management.
- Back panel provides grommet for wall access.

Model No.	Description	Dimensions	Wt.	List Price
BTB5S36	5 Shelf Bookcase (1 fixed shelf)	36"W x 15"D x 68 1/2"H	182#	$595
BTB4S36	4 Shelf Bookcase	36"W x 15"D x 50 1/2"H	143#	$494
BTB3S36	3 Shelf Bookcase	36"W x 15"D x 39 1/2"H	108#	$399

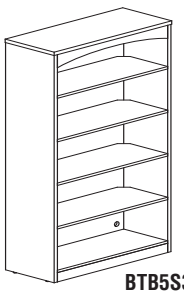

BTB5S36

BTB4S36

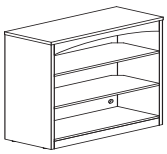

BTB3S36

GLASS DISPLAY CABINET

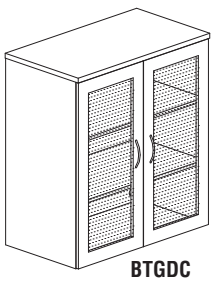

BTGDC

- Frosted glass highlights cabinet contents and still provides privacy.
- Glass is tempered for safety and durability.
- Two shelves are adjustable in 1 1/4" increments. Each shelf has 7 1/2" of total adjustment.
- Black pulls standard. Additional pull options available.
- Grommets in back panel for wall access.
- Shelves contain corner mouse hole for vertical cable management.

Model No.	Description	Dimensions	Wt.	List Price
BTGDC	Glass Display Cabinet	36"W x 20"D x 39 1/2"H	119#	$698

STORAGE CABINET

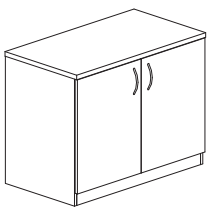

BTSC

- Self-closing hinged doors.
- Shelf is adjustable in 1 1/4" increments with 7 1/2" of total adjustment.
- Shelf contains corner mouse hole for vertical cable management.
- Grommet in back panel for wall access.
- Black pulls standard. Additional pull options available.

Model No.	Description	Dimensions	Wt.	List Price
BTSC	Storage Cabinet	36"W x 20"D x 29"H	96#	$420

BRIGHTON LAMINATE SERIES

RECEPTION ACCESSORIES

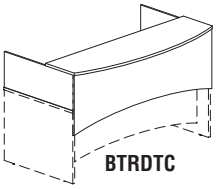
BTRDTC

- For main reception desk. To be used on BTRD7236.
- When installed Transaction Counter measures 72"W x 21"D x 15"H.
- Transaction counter surface is 1" thick.

Model No.	Description	Dimensions	Wt.	List Price
BTRDTC	72" Reception Transaction Counter	72"W x 42 5/8"D x 24 5/8"H	80#	$344

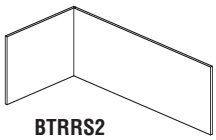
BTRRS2

- To be used on top of desk return BTR4824.
- Reception screen is symmetrical and non-handed.

Model No.	Description	Dimensions	Wt.	List Price
BTRRS2	48" Reception Return Screen	48"W x 23 3/4"D x 14"H	33#	$140

CONFERENCE TABLES

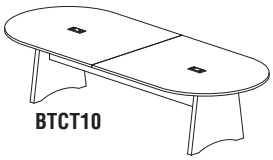
BTCT10

- 1" thick work surfaces.
- Racetrack conference table standard with grommets (120"W, 96"W = 2 grommets; 72"W = 1 grommet).
- Racetrack conference tables accept power module for power and data access to operate computers and presentation equipment.
- Round conference table does not have grommet.
- Structural modesty panel conceals horizontal cable management.

BTCT8

Model No.	Description	Dimensions	Wt.	List Price
BTCT10	10' Conference Table	119 5/8"W x 47 5/8"D x 29"H	306#	$1074
BTCT8	8' Conference Table	95 5/8"W x 47 5/8"D x 29"H	185#	$774
BTCT6	6' Conference Table	72"W x 36"D x 29"H	127#	$493
BTCTR48	48" Round Conference Table	48"Dia x 29"H	93#	$412

BTCTR48

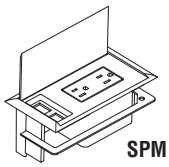
SPM

Model No.	Description	List Price
SPM UL LISTED	UL Listed Optional Power Module [includes RJ11-Cat 3 coupler (phone) and RJ45 coupler (data)] – 6' power cord	$284

CONFERENCE ACCESSORIES

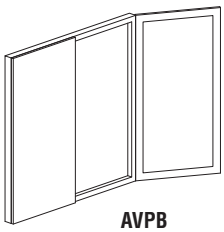
AVPB

- White dry-erase board in center panel that features magnetic, non-ghosting surface.
- Marker board can be used for projection.
- Sculpted lower tray holds markers, erasers, etc.
- Inside face of doors covered in tackable black fabric.
- Wall mounting brackets included.

Model No.	Description	Dimensions	Wt.	List Price
AVPB	Visual Presentation Board	48"W x 2 3/8"D x 48"H	80#	$892

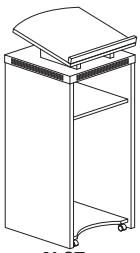
ALCT

- One fixed shelf.
- Four casters, two locking concealed in lectern base.
- Angled stand has stop to prevent papers from sliding.

Model No.	Description	Dimensions	Wt.	List Price
ALCT	Lectern	18"W x 18"D x 44"H	78#	$517

BRIGHTON LAMINATE SERIES TYPICALS

- Order complete suites using “BT__” models.

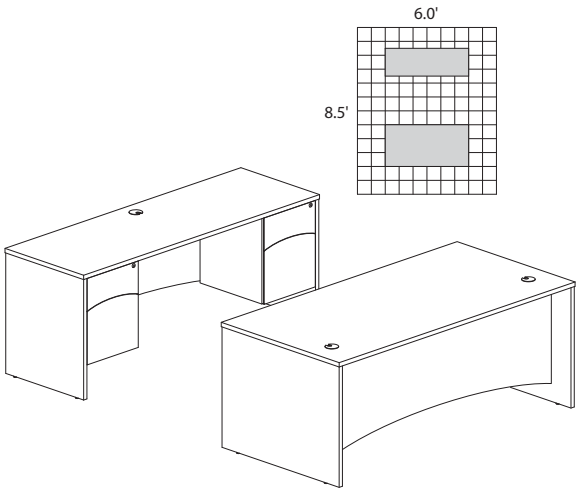

BRIGHTON TYPICAL #1

Consists of:

QTY.	MODEL NO.	DESCRIPTION	LIST PRICE EACH
1	**BTRD7236**	Rectangular Desk 72"W x 36"D	$517
4	**BTBF20**	Suspended Pedestal	$346
1	**BTCD7224**	Credenza Shell	$405

BT1 **TOTAL: $2306**

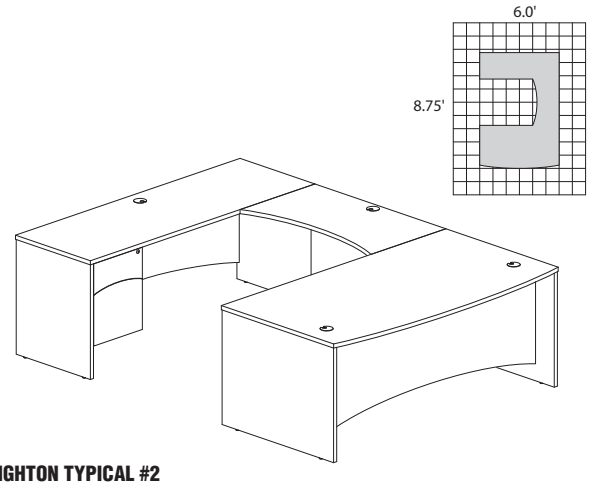

BRIGHTON TYPICAL #2

Consists of:

QTY.	MODEL NO.	DESCRIPTION	LIST PRICE EACH
1	**BTBD7239**	Bowfront Desk 72"W x 39"D	$538
2	**BTBF20**	Suspended Pedestal	$346
1	**BTCD7224**	Credenza Shell 72"W x 24"D	$405
1	**BTB4824**	Curved Bridge 48"W x 24"D	$232

BT2 **TOTAL: $1867**

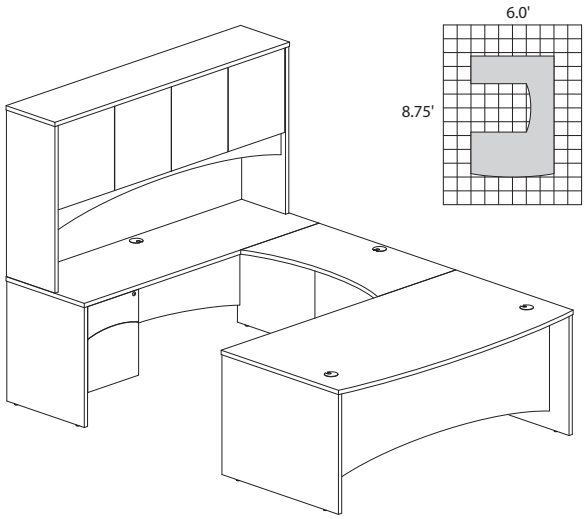

BRIGHTON TYPICAL #4

Consists of:

QTY.	MODEL NO.	DESCRIPTION	LIST PRICE EACH
1	**BTBD7239**	Bowfront Desk 72"W x 39"D	$538
2	**BTBF20**	Suspended Pedestal	$346
1	**BTCD7224**	Credenza Shell 72"W x 24"D	$405
1	**BTB4224**	Curved Bridge 42"W x 24"D	$211
1	**BTHW72**	Hutch with Wood Doors 72"W	$624
1	**AFTP72**	72" Fabric Tack Panel	$201

BT4 **TOTAL: $2671**

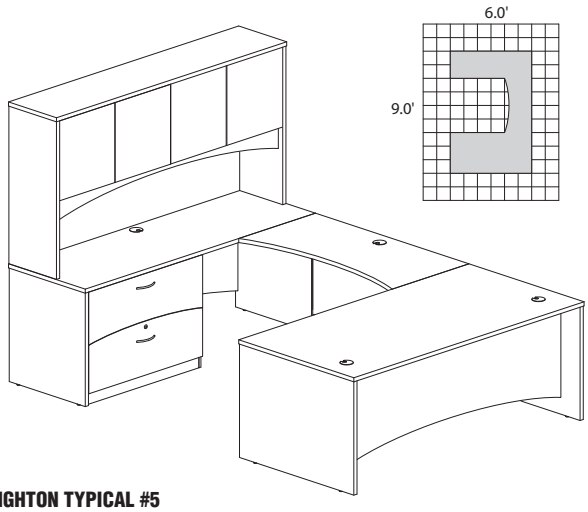

BRIGHTON TYPICAL #5

Consists of:

QTY.	MODEL NO.	DESCRIPTION	LIST PRICE EACH
1	**BTRD7236**	Rectangular Desk 72"W x 36"D	$517
1	**BTBF20**	Suspended Pedestal	$346
1	**BTCD7224**	Credenza Shell 72"W x 24"D	$405
1	**BTFLF36**	Freestanding Lateral File	$803
1	**BTB4824**	Curved Bridge 48"W x 24"D	$232
1	**BTHW72**	Hutch with Wood Doors 72"W	$624

BT5 **TOTAL: $2927**

BRIGHTON LAMINATE SERIES TYPICALS

- Order complete suites using "BT__" models.

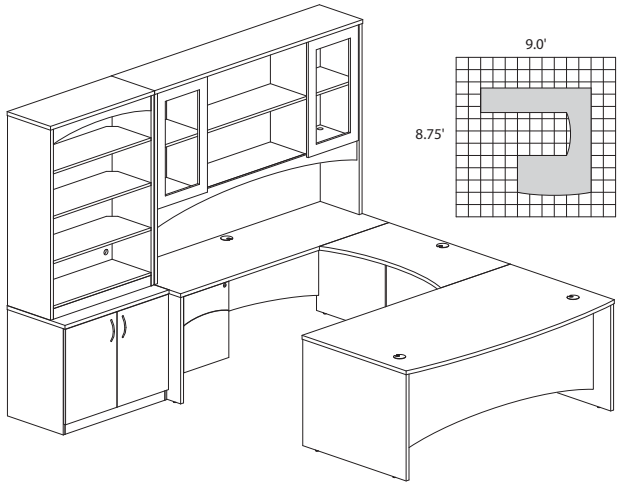

BRIGHTON TYPICAL #7

Consists of:

QTY.	MODEL NO.	DESCRIPTION	LIST PRICE EACH
1	**BTBD7239**	Bowfront Desk 72"W x 39"D	$538
2	**BTBF20**	Suspended Pedestal	$346
1	**BTCD7224**	Credenza Shell 72"W x 24"D	$405
1	**BTB4224**	Curved Bridge 42"W x 24"D	$211
1	**BTDHG72**	Hutch with Glass Doors	$826
1	**BTB4S36**	Bookcase, 4-Shelf	$494
1	**BTSC**	Storage Cabinet	$420

BT7 **TOTAL: $3586**

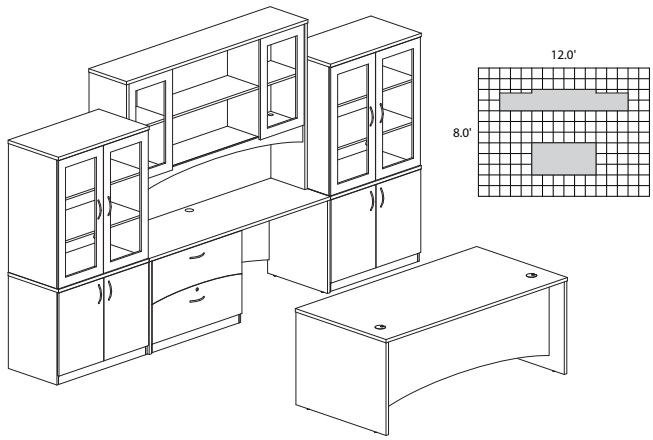

BRIGHTON TYPICAL #9

Consists of:

QTY.	MODEL NO.	DESCRIPTION	LIST PRICE EACH
1	**BTRD7236**	Rectangular Desk 72"W x 36"D	$517
2	**BTBF20**	Suspended Pedestal	$346
2	**BTSC**	Storage Cabinet	$420
1	**BTFLF36**	Freestanding Lateral File	$803
2	**BTGDC**	Glass Display Cabinet	$698
1	**BTDHG72**	Hutch with Glass Doors	$826
1	**BTCD7224**	Credenza 72"W x 24"D	$405

BT9 **TOTAL: $5479**

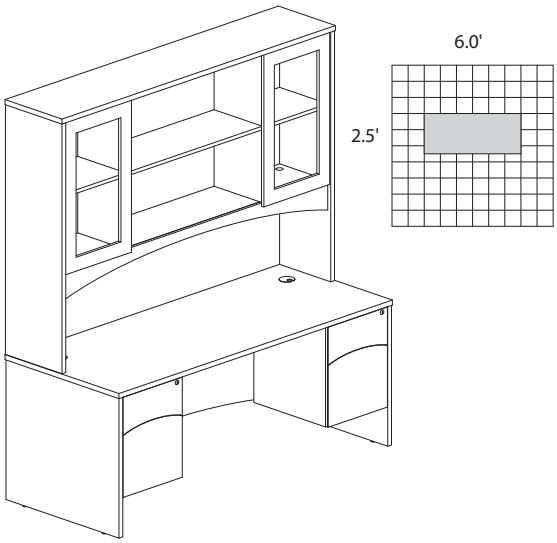

BRIGHTON TYPICAL #10

Consists of:

QTY.	MODEL NO.	DESCRIPTION	LIST PRICE EACH
1	**BTRD7230**	Rectangular Desk 72"W x 30"D	$458
2	**BTBF20**	Suspended Pedestal	$346
1	**BTDHG72**	Hutch with Glass Doors 72"W	$826

BT10 **TOTAL: $1976**

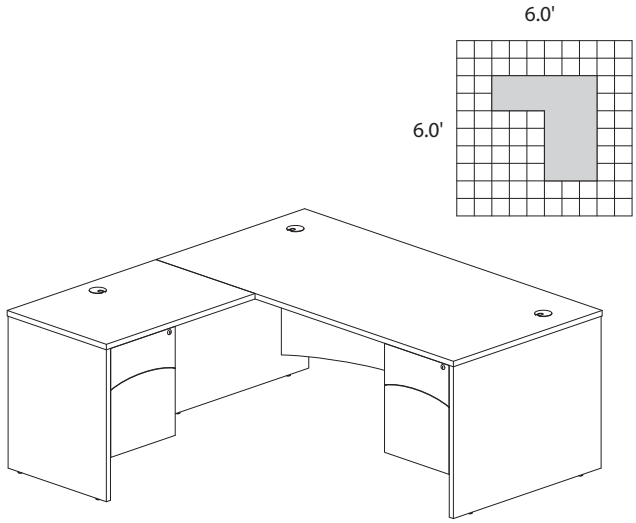

BRIGHTON TYPICAL #12

Consists of:

QTY.	MODEL NO.	DESCRIPTION	LIST PRICE EACH
1	**BTRD7236**	Rectangular Desk 72"W x 36"D	$517
2	**BTBF20**	Suspended Pedestal	$346
1	**BTR3624**	Return 36"W x 24"D	$238

BT12 **TOTAL: $1447**

BRIGHTON LAMINATE SERIES TYPICALS

- Order complete suites using "BT__" models.

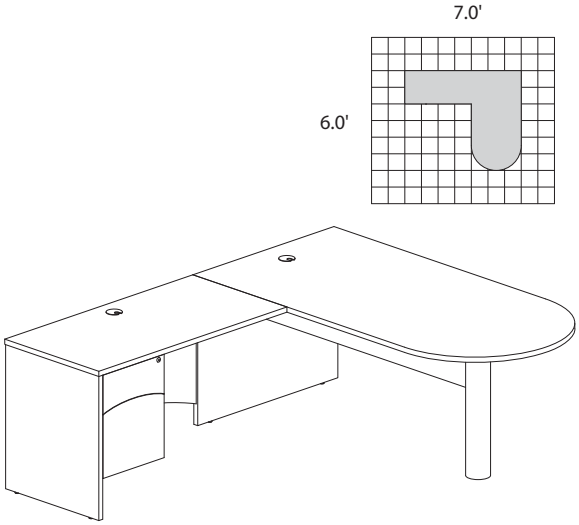

BRIGHTON TYPICAL #19

Consists of:

QTY.	MODEL NO.	DESCRIPTION	LIST PRICE EACH
1	**BTPT7236**	Peninsula Table 72"W x 36"D	$700
1	**BTR4824**	Return 48"W x 24"D	$274
1	**BTBF20**	Suspended Pedestal	$346

BT19 **TOTAL: $1320**

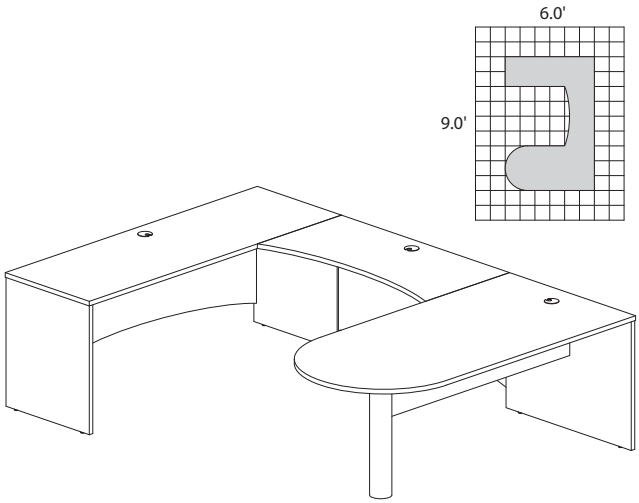

BRIGHTON TYPICAL #20

Consists of:

QTY.	MODEL NO.	DESCRIPTION	LIST PRICE EACH
1	**BTPT7236**	Peninsula Table 72"W x 36"D	$700
1	**BTB4824**	Curved Bridge 48"W x 24"D	$232
1	**BTCD7224**	Credenza Shell 72"W x 24"D	$405

BT20 **TOTAL: $1337**

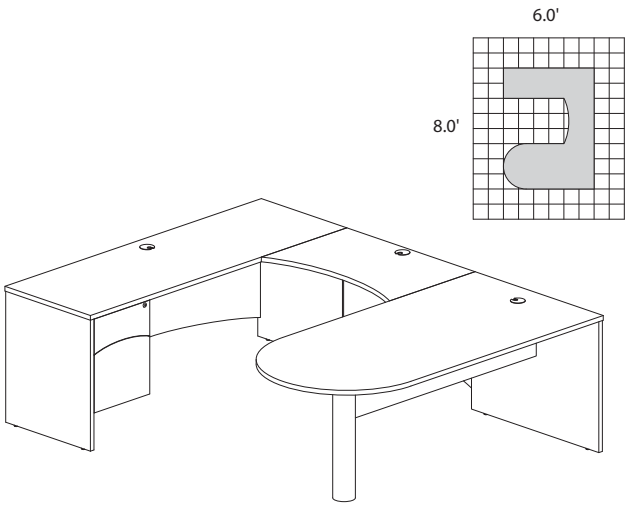

BRIGHTON TYPICAL #21

Consists of:

QTY.	MODEL NO.	DESCRIPTION	LIST PRICE EACH
1	**BTPT7236**	Peninsula Table 72"W x 36"D	$700
1	**BTB3624**	Curved Bridge 36"W x 24"D	$190
1	**BTCD7224**	Credenza Shell 72"W x 24"D	$405
1	**BTBF20**	Suspended Pedestal	$346

BT21 **TOTAL: $1641**

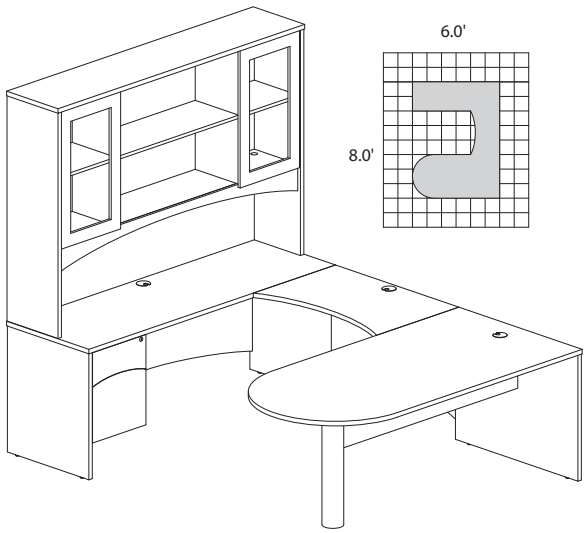

BRIGHTON TYPICAL #23

Consists of:

QTY.	MODEL NO.	DESCRIPTION	LIST PRICE EACH
1	**BTPT7236**	Peninsula Table 72"W x 36"D	$700
1	**BTB3624**	Curved Bridge 36"W x 24"D	$190
1	**BTCD7224**	Credenza Shell 72"W x 24"D	$405
1	**BTBF20**	Suspended Pedestal	$346
1	**BTDHG72**	Hutch with Glass Doors	$826

BT23 **TOTAL: $2467**

BRIGHTON LAMINATE SERIES TYPICALS

- Order complete suites using "BT__" models.

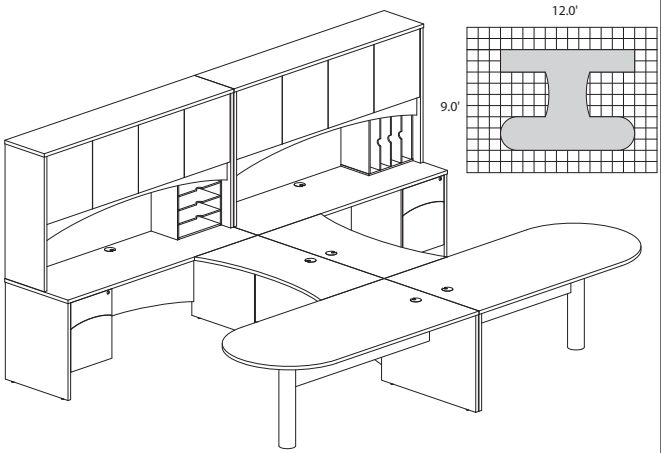

BRIGHTON TYPICAL #24

Consists of:

QTY.	MODEL NO.	DESCRIPTION	LIST PRICE EACH
2	**BTPT7236**	Peninsula Table 72"W x 36"D	$700
2	**BTB4824**	Curved Bridge 48"W x 24"D	$232
2	**BTCD7224**	Credenza Shell 72"W x 24"D	$405
2	**BTBF20**	Suspended Pedestal	$346
2	**BTHW72**	Hutch with Wood Doors 72"W	$624
2	**BTPM**	Paper Management	$165

BT24 **TOTAL: $4944**

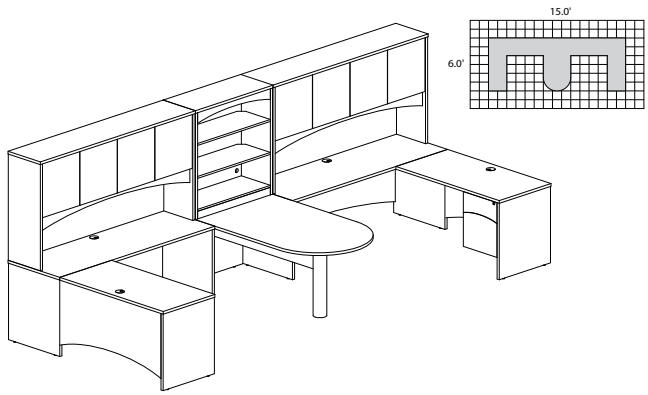

BRIGHTON TYPICAL #25

Consists of:

QTY.	MODEL NO.	DESCRIPTION	LIST PRICE EACH
2	**BTCD7224**	Credenza Shell 72"W x 24"D	$405
2	**BTHW72**	Hutch with Wood Doors 72"W	$624
2	**BTR4824**	Return 48"W x 24"D	$274
2	**BTBF20**	Suspended Pedestal	$346
1	**BTPT7236**	Peninsula Table 72"W x 36"D	$700
1	**BTB3S36**	Bookcase 3 Shelf	$399

BT25 **TOTAL: $4397**

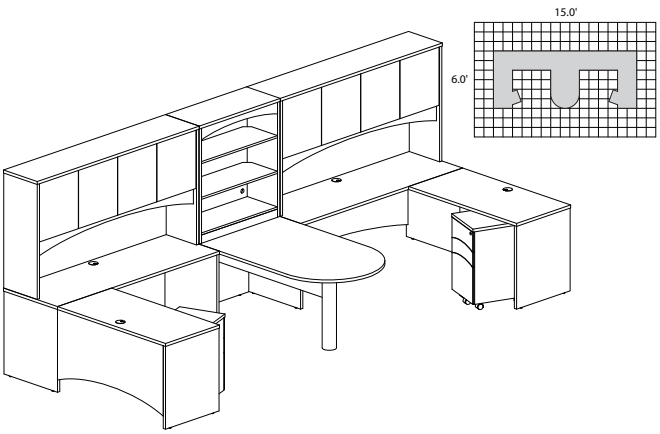

BRIGHTON TYPICAL #26

Consists of:

QTY.	MODEL NO.	DESCRIPTION	LIST PRICE EACH
2	**BTCD7224**	Credenza Shell 72"W x 24"D	$405
2	**BTHW72**	Hutch with Wood Doors 72"W	$624
2	**BTR4824**	Return 48"W x 24"D	$274
1	**BTPT7236**	Peninsula Table 72"W x 36"D	$700
2	**BTBBF20M**	Mobile Pedestal B/B/F	$464
1	**BTB3S36**	Bookcase 3 Shelf	$399

BT26 **TOTAL: $4633**

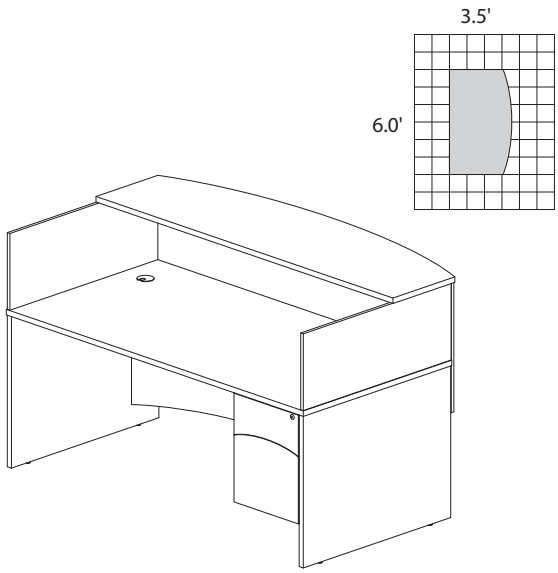

BRIGHTON TYPICAL #27

Consists of:

QTY.	MODEL NO.	DESCRIPTION	LIST PRICE EACH
1	**BTRD7236**	Rectangular Desk 72"W x 36"D	$517
1	**BTRDTC**	Reception Counter	$344
1	**BTBF20**	Suspended Pedestal	$346

BT27 **TOTAL: $1207**

BRIGHTON LAMINATE SERIES TYPICALS

- Order complete suites using "BT__" models.

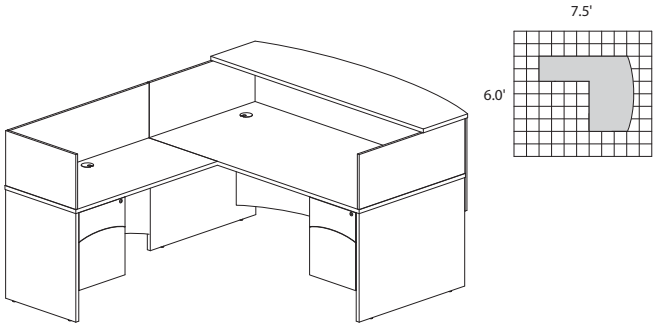

BRIGHTON TYPICAL #28

Consists of:

QTY.	MODEL NO.	DESCRIPTION	LIST PRICE EACH
1	**BTRD7236**	Rectangular Desk 72"W x 36"D	$517
1	**BTR4824**	Return 48"W x 36"D	$274
2	**BTBF20**	Suspended Pedestal	$346
1	**BTRDTC**	Reception Counter	$344
1	**BTRRS2**	Reception Screen	$140

BT28 **TOTAL: $1967**

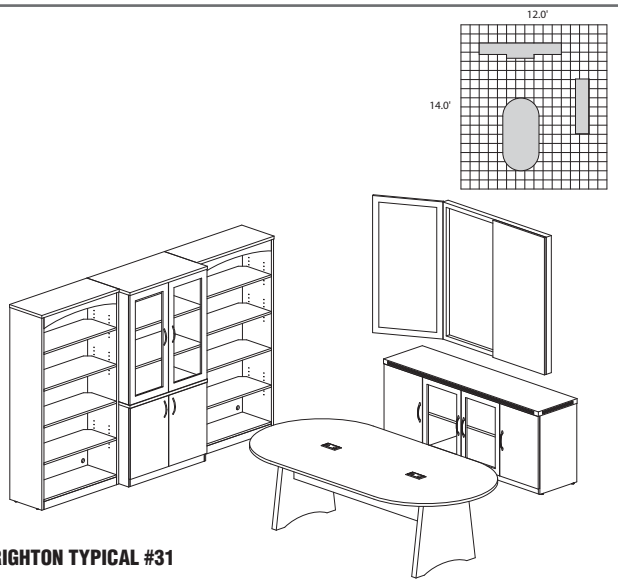

BRIGHTON TYPICAL #31

Consists of:

QTY.	MODEL NO.	DESCRIPTION	LIST PRICE EACH
1	**BTCT8**	Conference Table 96"W x 48"D	$774
2	**BTB5S36**	5-Shelf Bookcase	$595
1	**BTSC**	Storage Cabinet	$420
1	**BTGDC**	Glass Display Cabinet	$698
1	**ALC**	Low Wall Cabinet 72"W x 24"D	$1297
1	**AVPB**	Visual Presentation Board	$892

BT31 **TOTAL: $5271**

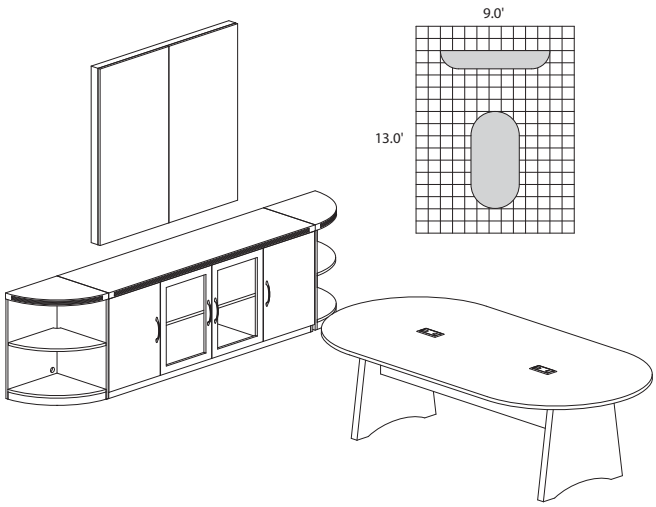

BRIGHTON TYPICAL #32

Consists of:

QTY.	MODEL NO.	DESCRIPTION	LIST PRICE EACH
1	**BTCT8**	Conference Table 96"W x 48"D	$774
1	**ALC**	Low Wall Cabinet	$1297
2	**ABQ2**	2-Shelf 1/4 Round	$286
1	**AVPB**	Visual Presentation Board	$892

BT32 **TOTAL: $3535**

CORSICA® VENEER SERIES

GIZA/CAP FAST Freight QUICK-SHIP

CORSICA DESK SYSTEM

The Corsica veneer desk system offers a sophisticated, elegant appearance for business or home office. Available in two rich finishes, Corsica Furniture features AA-grade select North American hardwood veneers throughout.

Surfaces: Sierra Cherry finish on cherry veneer and Mahogany finish on walnut veneer.

- Desk, Return and Credenza work surfaces are 2" thick with beveled Black edge.
- All veneer surfaces are protected with two final coats of high-tech catalyzed lacquer.
- All locks are keyed-alike and feature removable cores for installing "keyed-different" locks after-market.
- All models in all finishes are available on both the Quick-Ship and Fast Freight delivery programs with no quantity limitations.

BOW FRONT DESK

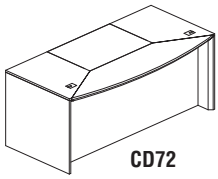
CD72

- Features bowfront surface and end panels with beveled edge.
- Full-height modesty panel
- Desk surface has two cable grommets.

Model No.	Dimensions	Wt.	List Price
CD72	72"W x 36"D x 29 1/2"H	273#	$1897

STRAIGHT FRONT DESK

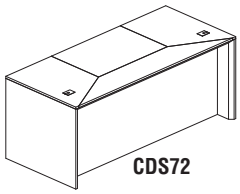
CDS72

Model No.	Dimensions	Wt.	List Price
CDS72	72"W x 32"D x 29 1/2"H	266#	$1733

PENINSULA DESK

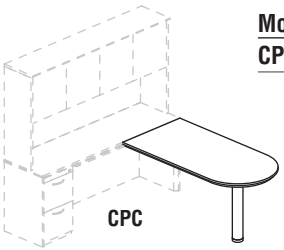
CPC

Model No.	Description	Dimensions	Wt.	List Price
CPC	Credenza supported desk	60"W x 30"D x 29 1/2"H	112#	$1187

CREDENZA

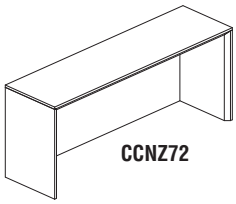
CCNZ72

- Full-height modesty panel.
- 19503TA Track is 16" long
- Beveled edge on end panels match desk detailing.

Model No.	Dimensions	Wt.	List Price
CCNZ72	72"W x 20"D x 29 1/2"H	183#	$1175
19503TA	Combination keyboard/mouse platform 19"W x 8 1/4"D, 9"Dia. mouse platform	15#	$570

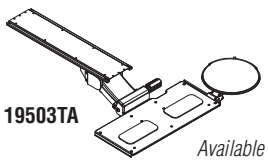
19503TA

Available in Black Only.

CORSICA VENEER SERIES

RETURN

- Choose from Left-Hand or Right-Hand model.
- Features end panel with beveled edge.
- Includes modesty panel with grommet.

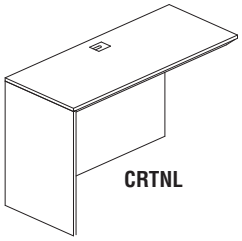

Model No.	Dimensions	Wt.	List Price
CRTNR	48"W x 20 1/2"D x 29 1/2"H - Right	101#	$753
CRTNL	48"W x 20 1/2"D x 29 1/2"H - Left	101#	$753

BRIDGE

- Universal mounting to right or left side of desk.
- Not free-standing. Requires connection to credenza and desk.
- Includes modesty panel with grommet.

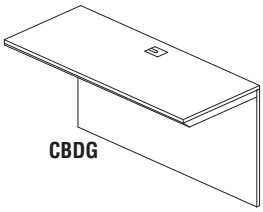

Model No.	Dimensions	Wt.	List Price
CBDG	48"W x 20 1/2"D x 29 1/2"H	88#	$577

HUTCH

- Fully assembled except for doors.
- Features four cabinet styled doors with self-closing hinges.
- 20 1/2" clearance between work surface and storage bin.
- Back panel features one lower and two upper cable grommets.
- Available with wood or glass doors.

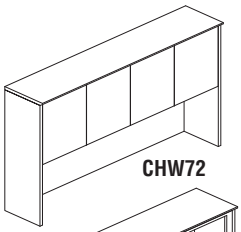

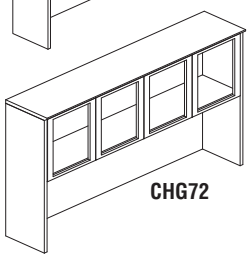

Model No.	Description	Dimensions	Wt.	List Price
CHW72	72" Hutch w/ wood doors	71 3/4"W x 15"D x 38 1/2"H	172#	$1775
CHG72	72" Hutch w/ glass doors	71 3/4"W x 15"D x 38 1/2"H	160#	$1775

FABRIC PANELS

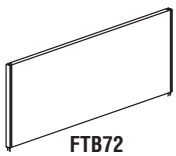

- Stocked in MIR1454 Birch Fabric.
- Other fabrics available as a special order; special orders sold in pairs.

Model No.	Dimensions	Wt.	List Price
FTB72	69"W x 18 1/2"H	16#	$493

OPTIONAL HUTCH TASKLIGHT

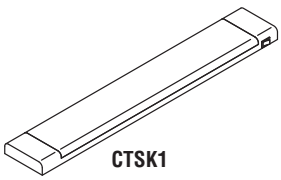

Model No.	Description	Dimensions	Wt.	List Price
CTSK1	Tasklight	25"W x 4"D x 1"H	5#	$144

CORSICA VENEER SERIES

PEDESTAL FILES FOR DESK

- Drawer interiors finished to match exterior veneer.
- Gang-lock features removable core.
- File drawers accommodate letter or legal size hanging file folders.
- Drawers operate smoothly using full-extension ball-bearing suspensions.
- Choice of two styles featuring two file drawers or two box drawers and one file drawer.
- Unfinished top.

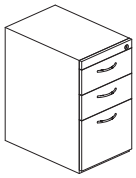
CBBFD

Model No.	Dimensions	Wt.	List Price
CBBFD Box-Box-File	15 1/4"W x 24"D x 27 1/2"H Assembled	82#	$853
CFFD File-File	15 1/4"W x 24"D x 27 1/2"H Assembled	68#	$824

PEDESTAL FILES FOR CREDENZA/RETURN

- Drawer interiors finished to match exterior veneer
- File drawers accommodate letter or legal size hanging file folders..
- Drawers operate smoothly using full-extension ball-bearing suspensions. Gang-lock features removable core.
- Choice of two styles featuring two file drawers or two box drawers and one file drawer.
- Unfinished top.

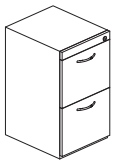
CFFC

Model No.	Dimensions	Wt.	List Price
CBBFC Box-Box-File	15 1/4"W x 18"D x 27 1/2"H Assembled	62#	$704
CFFC File-File	15 1/4"W x 18"D x 27 1/2"H Assembled	54#	$692

LATERAL FILE FOR CREDENZA/RETURN

- Unfinished top. Must be installed under credenza.
- Gang-lock features removable core enabling keyed-alike suites.
- Drawers operate smoothly using full-extension ball-bearing suspensions.
- Drawer interiors finished to match exterior veneer.
- Accommodates letter or legal size hanging file folders.

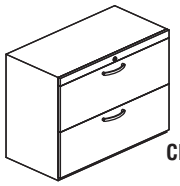
CLF

Model No.	Dimensions	Wt.	List Price
CLF*	36"W x 18"D x 27 1/2"H Assembled	105#	$1271

***Note:** Limited quantities available.

CENTER DRAWER

- Can be used on desk or credenza.
- Leather lined interior compartments.
- Drawer operates smoothly using full-extension ball-bearing suspension.
- Solid wood frame construction.
- Beveled front edge to match desk surface design.

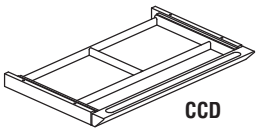
CCD

Model No.	Dimensions	Wt.	List Price
CCD	30"W x 18"D x 2"H Assembled	10#	$245

CORSICA VENEER SERIES

STRAIGHT FRONT DESK*

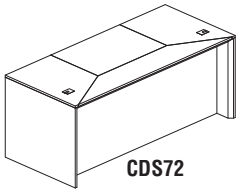

Model No.	Description	Dimensions	Wt.	List Price
CDS72*	72" Straight Front	72"W x 32"D x 29 1/2"H	265#	$1733

RECEPTION COUNTER*

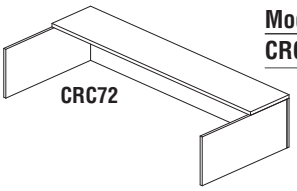

Model No.	Description	Dimensions	Wt.	List Price
CRC72*	Reception Counter	72"W x 32"D x 15"H	65#	$693

RECEPTION COUNTER RETURN*

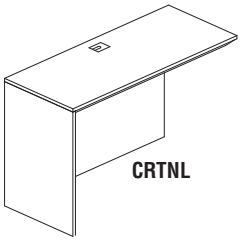

Model No.	Description	Dimensions	Wt.	List Price
CRTNR*	Return - Right	48"W x 20 1/2"D x 29 1/2"H - Right	101#	$753
CRTNL*	Return - Left	48"W x 20 1/2"D x 29 1/2"H - Left	101#	$753

RETURN RECEPTION SCREEN

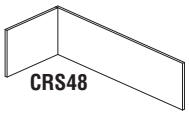

- Universal right- or left-handed.

Model No.	Description	Dimensions	Wt.	List Price
CRS48*	Return Reception Screen	48"W x 20 1/4"D x 14"H	15#	$332

***Note:** Limited quantities available.

CORSICA VENEER SERIES

PEDESTAL FILES FOR DESK

- Drawer interiors finished to match exterior veneer.
- Drawers operate smoothly using full-extension ball-bearing suspensions.
- Gang-lock features removable core.
- Choice of two styles featuring two file drawers or two box drawers and one file drawer.
- File drawers accommodate letter or legal size hanging file folders.
- Unfinished Top.

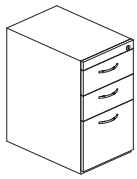

CBBFD

Model No.	Dimensions	Wt.	List Price
CBBFD Box-Box-File	15 1/4"W x 24"D x 27 1/2"H Assembled	82#	$853
CFFD File-File	15 1/4"W x 24"D x 27 1/2"H Assembled	68#	$824

PEDESTAL FILES FOR CREDENZA/RETURN

- Drawer interiors finished to match exterior veneer.
- Drawers operate smoothly using full-extension ball-bearing suspensions. Gang-lock features removable core.
- Choice of two styles featuring two file drawers or two box drawers and one file drawer.
- File drawers accommodate letter or legal size hanging file folders.
- Unfinished Top.

CFFC

Model No.	Dimensions	Wt.	List Price
CBBFC Box-Box-File	15 1/4"W x 18"D x 27 1/2"H Assembled	62#	$704
CFFC File-File	15 1/4"W x 18"D x 27 1/2"H Assembled	54#	$692

LATERAL FILE FOR CREDENZA/RETURN*

- Unfinished top. Must be installed under credenza.
- Drawer interiors finished to match exterior veneer.
- Drawers operate smoothly using full-extension ball-bearing suspensions.
- Gang-lock features removable core enabling keyed-alike suites.
- Accommodates letter or legal size hanging file folders.

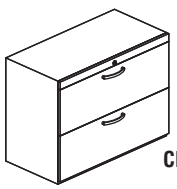

CLF

Model No.	Dimensions	Wt.	List Price
CLF*	36"W x 18"D x 27 1/2"H Assembled	105#	$1271

***Note:** Limited quantities available.

CORSICA VENEER SERIES

CORSICA CONFERENCE ROOM FURNITURE

The Corsica veneer conference room furniture features elegant lines with excellent durability. Available in two rich finishes, Corsica Furniture features AA-grade select North American hardwood veneers throughout. Beveled 2" thick surfaces.
Surfaces: Sierra Cherry finish on cherry veneer and Mahogany finish on walnut veneer.

- All veneer surfaces are protected with two coats of high-tech catalyzed lacquer.

CONFERENCE TABLES

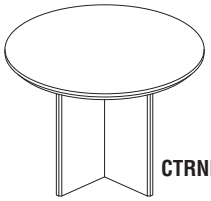
CTRND

- Built-in cable management panel features a flush, removable steel cover.
- Tops and base ship separately.
- Table top is 2" thick with Black beveled edge.
- Work surfaces are protected with two-coats of high-tech catalyzed lacquer finish.
- Tables larger than 96"L have multi-piece top surfaces connected via steel cam fasteners and steel connecting plates.
- Supports up to 500 lbs., evenly distributed.

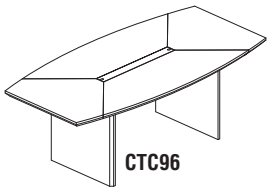
CTC96

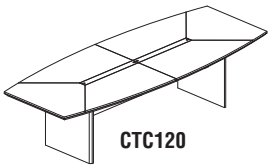
CTC120

Model No.	Description	Dimensions	Wt.	List Price
CTC72	Boat-shaped Conference Table	72"W x 36"D x 29 1/2"H	226#	$1603
CTC84	Boat-shaped Conference Table	84"W x 42"D x 29 1/2"H	297#	$1896
CTC96	Boat-shaped Conference Table	96"W x 42"D x 29 1/2"H	340#	$2357
CTC120	Boat-shaped Conference Table	120"W x 48"D x 29 1/2"H	372#	$3398
CMT12	Boat-shaped Conference Table	144"W x 54"D x 29 1/2"H	620#	$5725
CMT14	Boat-shaped Conference Table	168"W x 54"D x 29 1/2"H	713#	$6377
CMT18	Boat-shaped Conference Table	216"W x 54"D x 29 1/2"H	882#	$8337
CMT20	Boat-shaped Conference Table	240"W x 54"D x 29 1/2"H	975#	$9219
CMT24	Boat-shaped Conference Table	288"W x 54"D x 29 1/2"H	1199#	$11279
CMT26	Boat-shaped Conference Table	312"W x 54"D x 29 1/2"H	1292#	$12160
CMT30	Boat-shaped Conference Table	360"W x 54"D x 29 1/2"H	1516#	$14222
CTRND	Round Conference Table	42" Round x 29 1/2"H	80#	$877

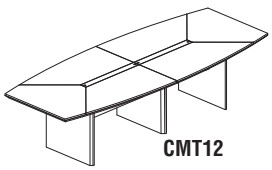
CMT12

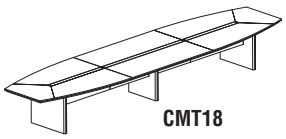
CMT18

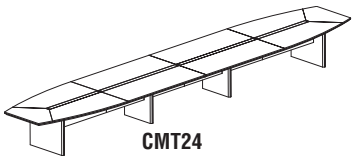
CMT24

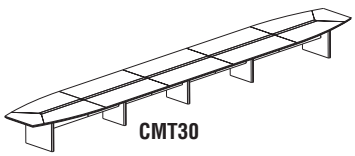
CMT30

PRESENTATION BOARD

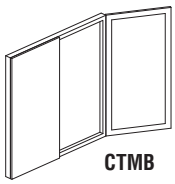
CTMB

- White dry-erase board center panel (45" x 45").
- Sculpted lower tray holds markers, erasers, etc.
- Features magnetic, non-ghosting surface.
- Tackable black interior door inserts.
- Full-height brass hinge.

Model No.	Dimensions	Wt.	List Price
CTMB	48"W x 48"H x 3 1/4"D Assembled	110#	$1467

CORSICA STORAGE SYSTEMS

The Corsica veneer storage systems furniture features elegant lines with excellent durability. Available in three rich finishes, REAL Office Furniture features AA-grade select North American hardwood veneers throughout.
Surfaces: Sierra Cherry finish on cherry veneer, Mahogany finish on walnut veneer and Golden Cherry finish on beech veneer.

- All veneer surfaces are protected with two final coats of high-tech catalyzed lacquer.
- All lateral files and storage cabinets feature finished backs.
- All locks have removable cores.
- Lateral files and mobile pedestals feature gang lock mechanism.

LATERAL FILE

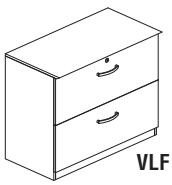
VLF

- Drawer interiors finished to match exterior veneer.
- Gang-lock features removable core enabling keyed-alike suites.
- Drawers operate smoothly using full-extension ball-bearing suspensions.
- Includes counter-weight for stability when in use.
- Accommodate letter and legal sized hanging file folders.

Model No.	Description	Dimensions	Wt.	List Price
VLF	File-File	36"W x 19"D x 29 1/2"H Assembled	160#	$1542

CORSICA VENEER SERIES

MOBILE PEDESTALS

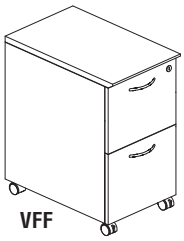
VFF

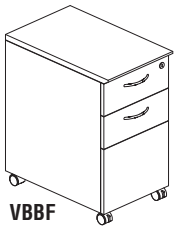
VBBF

- Drawer interiors finished to match exterior veneer.
- Drawers operate smoothly using full-extension ball-bearing suspensions.
- Gang-lock features removable core enabling keyed-alike suites.
- 2" dual-hooded casters. (2 lock, 2 non-lock)
- Choice of two styles featuring two file drawers or two box drawers and one file drawer.
- File drawers accommodate letter and legal sized hanging file folders.
- Includes counter-weight for stability when in use.

Model No.	Description	Dimensions	Wt.	List Price
VBBF	Box-Box-File	15 1/4"W x 24"D x 27 1/2"H Assembled	92#	$879
VFF	File-File	15 1/4"W x 24"D x 27 1/2"H Assembled	80#	$853

COMBO FILE*

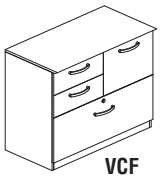
VCF

- Drawer interiors finished to match exterior veneer.
- Drawers operate smoothly using full-extension ball-bearing suspensions.
- File drawers accommodate letter and legal sized hanging file folders.

Model No.	Description	Dimensions	Wt.	List Price
VCF*	Veneer Top	36"W x 19"D x 29 1/2"H Assembled	165#	$1881

***Note:** Limited quantities available.

WARDROBE CABINETS

VWRDL

VWRDR

- Choice of units with hinges on left or right.
- Interior features sliding wardrobe hanging bar with 59"H clearance.
- Includes one fixed shelf and three adjustable shelves. (1 1/4" increments)

Model No.	Description	Dimensions	Wt.	List Price
VWRDL	Hinges on left	23 5/8"W x 19"D x 80"H	180#	$1694
VWRDR	Hinges on right	23 5/8"W x 19"D x 80"H	180#	$1694

HIGH WALL CABINET WITH DOORS

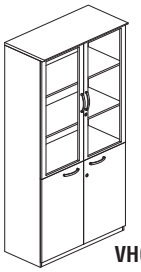
VHC

- Features glass doors with silver frame above wood doors.
- Includes two adjustable shelves in top section and one adjustable shelf in lower section.
- Top and bottom doors lock separately. Keyed alike.
- Able to stand alone or be flanked by Wardrobe Cabinets.

Model No.	Dimensions	Wt.	List Price
VHC	40"W x 19"D x 80"H	284#	$2695

68" WALL CABINET

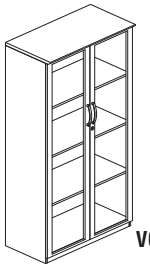
VCG

- Storage unit with choice of wood doors or glass doors.
- Includes one fixed shelf and two adjustable shelves.

Model No.	Description	Dimensions	Wt.	List Price
VCG	With glass doors	36"W x 19"D x 68"H	253#	$1884

CORSICA VENEER SERIES

LOW WALL CABINET WITH DOORS

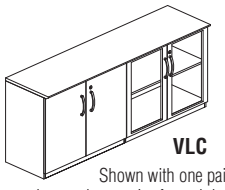

VLC

Shown with one pair of glass and one pair of wood doors.

- Features a choice of wood/glass, all-wood, or all-glass door sets.
- Includes one adjustable shelf on each side.
- Sets of doors lock separately. Keyed alike.
- Supports 75 lbs. per shelf, evenly distributed.

Model No.	Description	Dimensions	Wt.	List Price
VLC	Wood/Glass Door Combination	72"W x 19"D x 29 1/2"H	193#	$1819
VLCW	All Wood Doors	72"W x 19"D x 29 1/2"H	193#	$1819

BOOKCASES

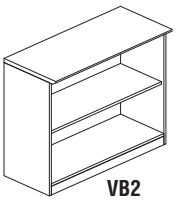

VB2

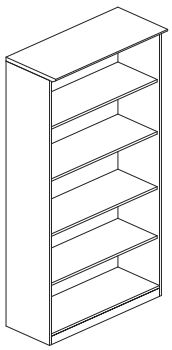

VB5

- Open shelves for convenient storage.
- VB2 & VB5 support 75 lbs. per shelf, evenly distributed; VBQ2 & VBQ5 support 25 lbs. per shelf, evenly distributed.
- Choice of two or five shelf units.
- Adjustable shelves.

Model No.	Description	Dimensions	Wt.	List Price
VB2	2 Shelf	36"W x 16"D x 29 1/2"H	64#	$749
VB5	5 Shelf	36"W x 16"D x 68"H	140#	$1451
VBQ2	2 Shelf 1/4 - Round	19"W x 19"D x 29 1/2"H	25#	$704
VBQ5*	5 Shelf 1/4 - Round	19"W x 19"D x 68"H	65#	$1369

***Note:** Limited quantities available.

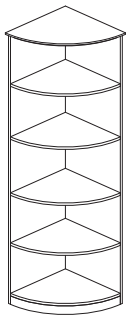

VBQ5

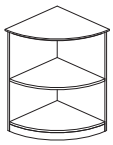

VBQ2

BUFFET

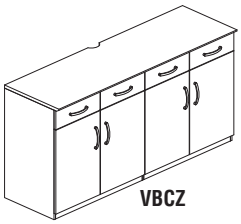

VBCZ

Model No.	Dimensions	Wt.	List Price
VBCZ	72"W x 22"D x 36"H	297#	$2914

REPLACEMENT LOCK CORES

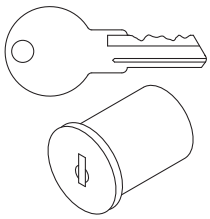

- Allows pedestals and laterals to be keyed uniquely for up to 10 different workstations.
- Master key available.
- Must purchase a core removal tool to change locks cores.

Model No.	Description	Wt.	List Price
REALCC0311 through **REALCC0325** (Silver)	Replacement core with keys	1#	$21
REALCRK	Core removal tool	1#	$22
REALCMK	Master Key	1#	$21

CORSICA VENEER SERIES TYPICALS

- **Order complete suites using "CT__" models.**

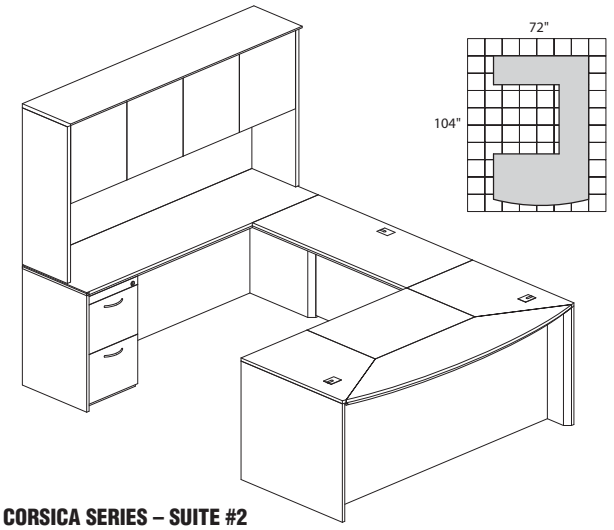

CORSICA SERIES – SUITE #2

Consists of:

QTY.	MODEL NO.	DESCRIPTION	LIST PRICE EACH
1	**CD72**	72" Bow Front Desk	$1897
1	**CBDG**	Universal Bridge	$577
1	**CCNZ72**	72" Credenza	$1175
1	**CHW72**	72" Wood Doors Hutch	$1775
1	**CBBFD**	Box Box File Ped	$853
1	**CFFC**	File File Ped	$692
1	**CCD**	Center Drawer	$245

CT2 **TOTAL: $7285**

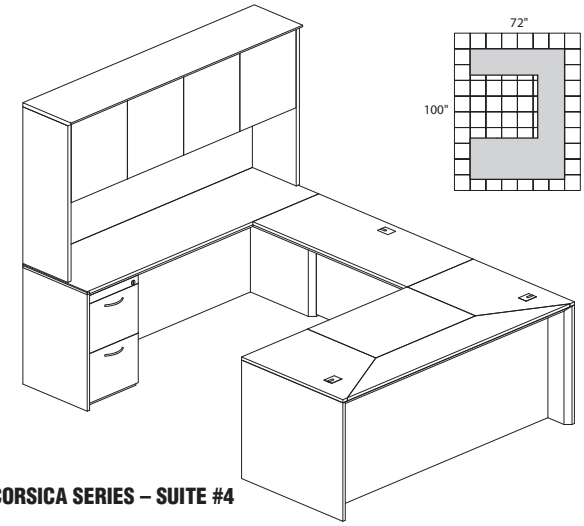

CORSICA SERIES – SUITE #4

Consists of:

QTY.	MODEL NO.	DESCRIPTION	LIST PRICE EACH
1	**CDS72**	72" Straight Front Desk	$1733
1	**CBDG**	Universal Bridge	$577
1	**CCNZ72**	72" Credenza	$1175
1	**CHW72**	72" Wood Doors Hutch	$1775
1	**CBBFD**	Box Box File Ped	$853
1	**CFFC**	File File Ped	$692
1	**CCD**	Center Drawer	$245

CT4 **TOTAL: $7121**

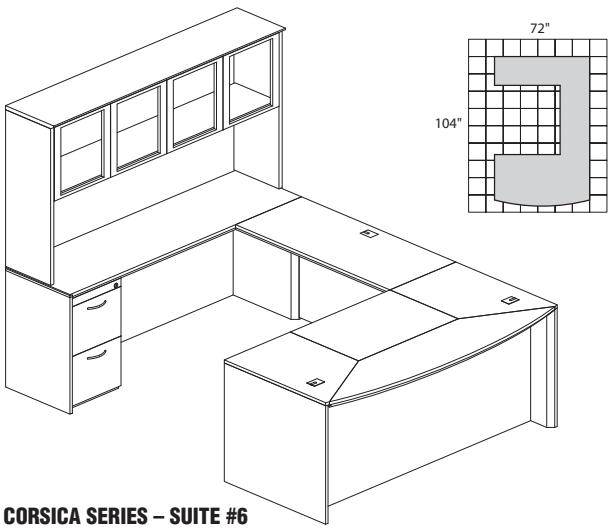

CORSICA SERIES – SUITE #6

Consists of:

QTY.	MODEL NO.	DESCRIPTION	LIST PRICE EACH
1	**CD72**	72" Bow Front Desk	$1897
1	**CBDG**	Universal Bridge	$577
1	**CCNZ72**	72" Credenza	$1175
1	**CHG72**	72" Glass Doors Hutch	$1775
1	**CBBFD**	Box Box File Ped	$853
1	**CFFC**	File File Ped	$692
1	**CCD**	Center Drawer	$245

CT6 **TOTAL: $7454**

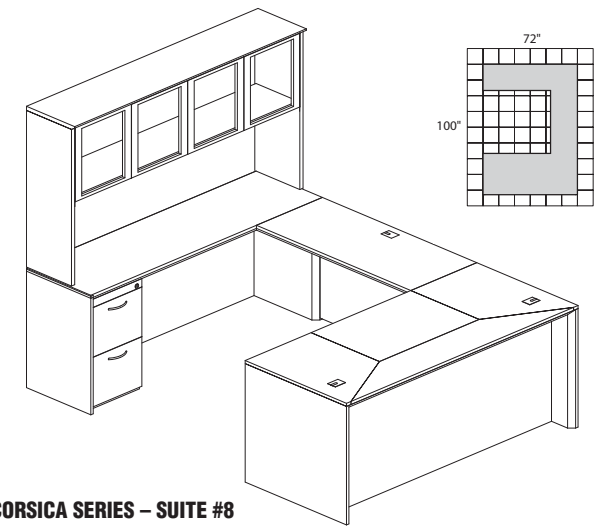

CORSICA SERIES – SUITE #8

Consists of:

QTY.	MODEL NO.	DESCRIPTION	LIST PRICE EACH
1	**CDS72**	72" Straight Front Desk	$1733
1	**CBDG**	Universal Bridge	$577
1	**CCNZ72**	72" Credenza	$1175
1	**CHG72**	72" Glass Doors Hutch	$1775
1	**CBBFD**	Box Box File Ped	$853
1	**CFFC**	File File Ped	$692
1	**CCD**	Center Drawer	$245

CT8 **TOTAL: $7290**

CORSICA VENEER SERIES TYPICALS

- **Order complete suites using "CT__" models.**

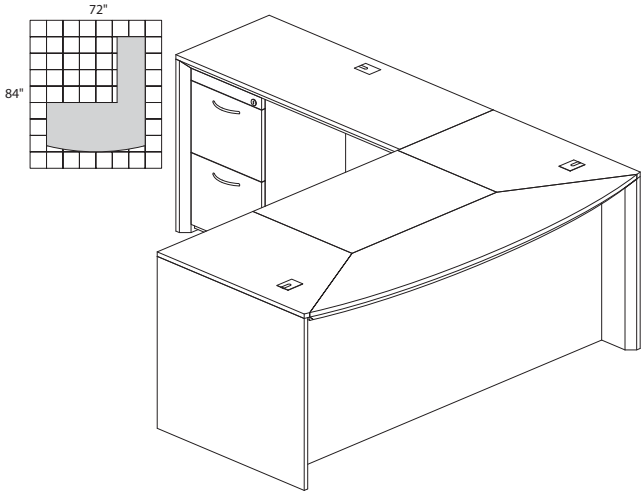

CORSICA SERIES – SUITE #10

Consists of:

QTY.	MODEL NO.	DESCRIPTION	LIST PRICE EACH
1	**CD72**	72" Bow Front Desk	$1897
1	**CRTNL**	Left Hand Return	$753
1	**CCD**	Center Drawer	$245
1	**CBBFD**	Box Box File Ped	$853
1	**CFFC**	File File Ped	$692

CT10 **TOTAL: $4440**

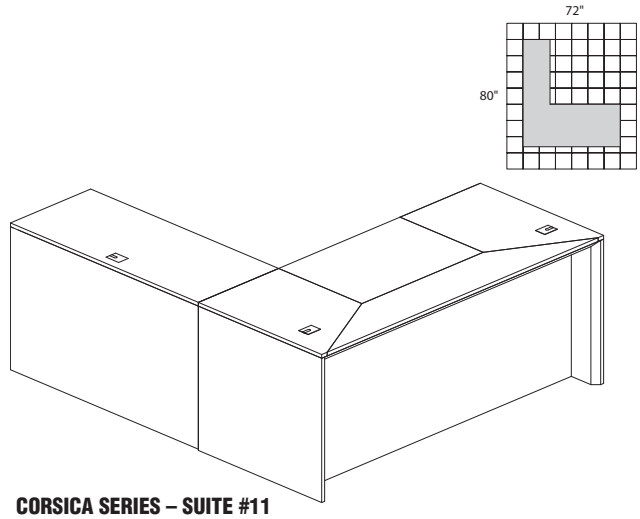

CORSICA SERIES – SUITE #11

Consists of:

QTY.	MODEL NO.	DESCRIPTION	LIST PRICE EACH
1	**CDS72**	72" Straight Front Desk	$1733
1	**CRTNR**	Right Hand Return	$753
1	**CCD**	Center Drawer	$245
1	**CBBFD**	Box Box File Ped	$853
1	**CFFC**	File File Ped	$692

CT11 **TOTAL: $4276**

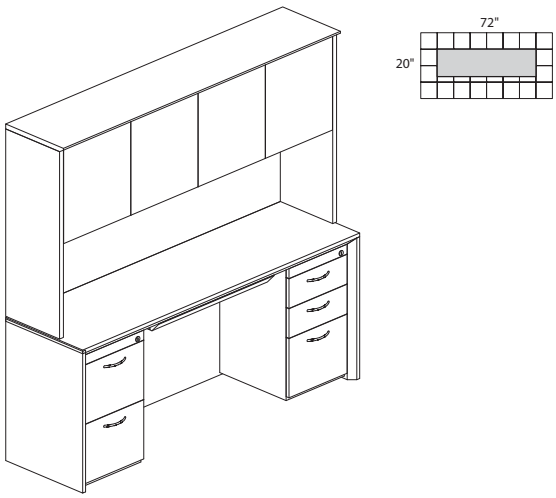

CORSICA SERIES – SUITE #15

Consists of:

QTY.	MODEL NO.	DESCRIPTION	LIST PRICE EACH
1	**CCNZ72**	72" Credenza	$1175
1	**CHW72**	72" Wood Doors Hutch	$1775
1	**CBBFC**	Box Box File Ped	$704
1	**CFFC**	File File Ped	$692
1	**CCD**	Center Drawer	$245

CT15 **TOTAL: $4662**

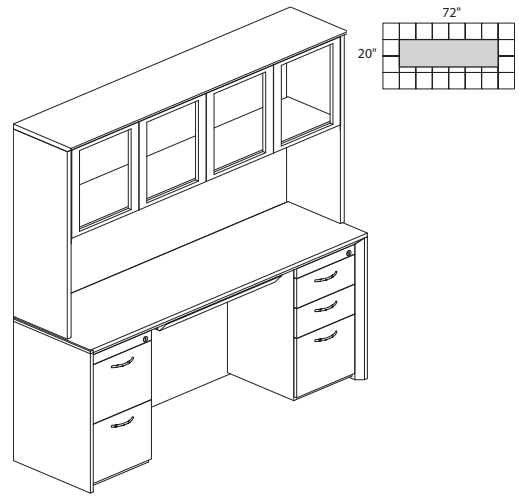

CORSICA SERIES – SUITE #16

Consists of:

QTY.	MODEL NO.	DESCRIPTION	LIST PRICE EACH
1	**CCNZ72**	72" Credenza	$1175
1	**CHG72**	72" Glass Doors Hutch	$1775
1	**CBBFC**	Box Box File Ped	$704
1	**CFFC**	File File Ped	$692
1	**CCD**	Center Drawer	$245

CT16 **TOTAL: $4831**

CORSICA VENEER SERIES TYPICALS

- **Order complete suites using "CT__" models.**

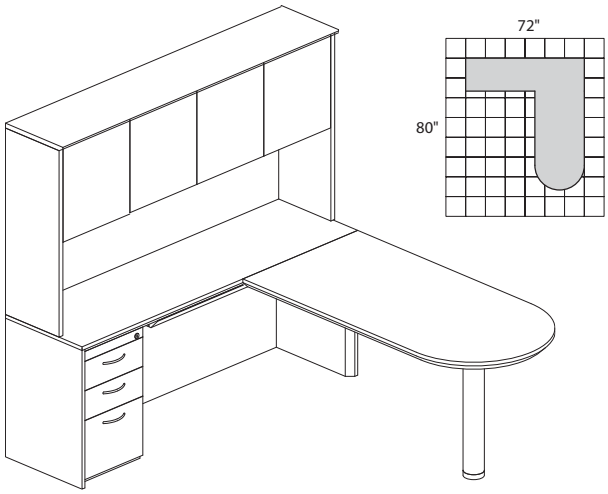

CORSICA SERIES – SUITE #19

Consists of:

QTY.	MODEL NO.	DESCRIPTION	LIST PRICE EACH
1	**CPC**	Peninsula Desk	$1187
1	**CCNZ72**	72" Credenza	$1175
1	**CHW72**	72" Wood Door Hutch	$1775
1	**CBBFC**	Box Box File Ped	$704
1	**CCD**	Center Drawer	$245

CT19 **TOTAL: $5157**

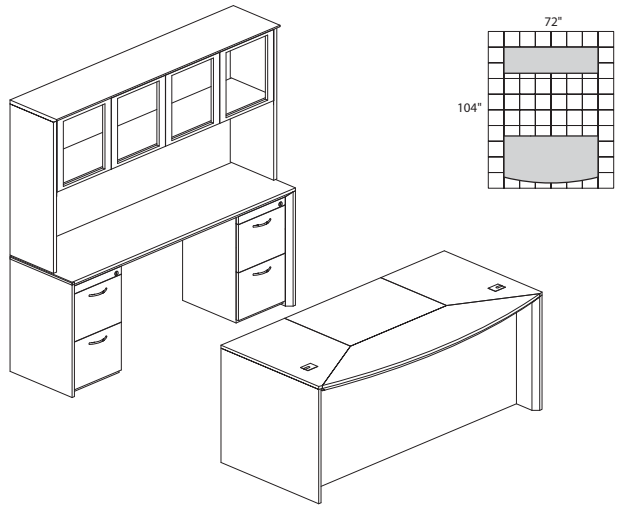

CORSICA SERIES – SUITE #26

Consists of:

QTY.	MODEL NO.	DESCRIPTION	LIST PRICE EACH
1	**CD72**	72" Bow Front Desk	$1897
1	**CCNZ72**	72" Credenza	$1175
1	**CHG72**	72" Glass Doors Hutch	$1775
1	**CBBFD**	Box Box File Ped	$853
1	**CBBFD**	Box Box File Ped	$853
1	**CFFC**	File File Ped	$692
1	**CFFC**	File File Ped	$692
1		Center Drawer	$245

CT26 **TOTAL: $8422**

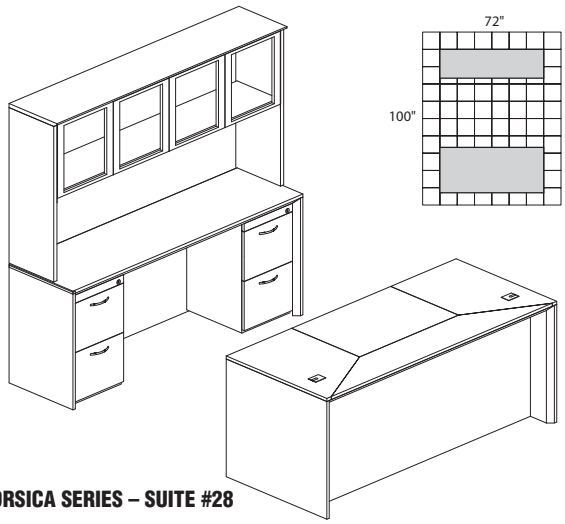

CORSICA SERIES – SUITE #28

Consists of:

QTY.	MODEL NO.	DESCRIPTION	LIST PRICE EACH
1	**CDS72**	72" Straight Front Desk	$1733
1	**CCNZ72**	72" Credenza	$1175
1	**CHG72**	72" Glass Doors Hutch	$1775
1	**CBBFD**	Box Box File Ped	$853
1	**CBBFD**	Box Box File Ped	$853
1	**CFFC**	File File Ped	$692
1	**CFFC**	File File Ped	$692
1		Center Drawer	$245

CT28 **TOTAL: $8258**

NAPOLI VENEER SERIES

GIZA/CAP FAST Freight QUICK-SHIP

The Napoli veneer desk system features Italian-influenced, sophisticated styling for business or home office.
Available in three rich finishes, Napoli Furniture features AA-grade select North American hardwood veneers throughout.

Surfaces: Sierra Cherry finish on cherry veneer, Mahogany finish on walnut veneer and Golden Cherry finish on beech veneer.

- Desk, Return and Extension work surfaces are 1 1/8" thick with a distinctive beveled edge.
- All veneer surfaces are protected with two coats of high-tech catalyzed lacquer.
- All locks are keyed-alike and feature removable cores for installing "keyed-different" locks after-market.
- Silver detailing adds contemporary look to the Napoli series.
- All models in all finishes are available on both the Quick-Ship and Fast Freight delivery programs with no quantity limitations.

DESK

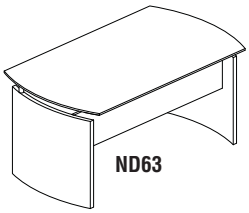
ND63

- Napoli desk surface seems to "float" on silver supports.
- Silver modesty panel.
- Curved end panels reflect curved ends of work surface.

Model No.	Dimensions	Wt.	List Price
ND63	63"W x 36"D x 29 1/2"H	155#	$1310
ND72	72"W x 36"D x 29 1/2"H	183#	$1416

CURVED DESK RETURN WITH PENCIL-BOX-FILE PEDESTAL

- Creates L-shaped work surface when attached to desk.
- Available for right or left side of desk.
- Gang-lock features removable core.
- Supported by Return Pencil-Box-File Pedestal.
- Pedestal drawer interiors finished to match exterior veneer.
- Stands off floor on silver legs.

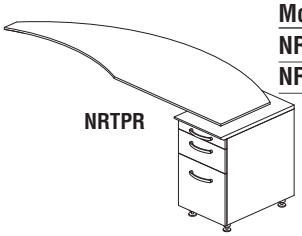
NRTPR

Model No.	Description	Dimensions	Wt.	List Price
NRTPR	63" Right return	63"W x 24"D x 29 1/2"H	123#	$1324
NRTPL	63" Left return	63"W x 24"D x 29 1/2"H	123#	$1324

CURVED DESK EXTENSION

- Creates conference end to Napoli desk.
- Leg includes grommets for cable management.
- Supported by silver leg.
- Available for right or left side of desk.

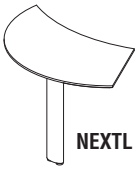
NEXTL

Model No.	Description	Dimensions	Wt.	List Price
NEXTR	Right extension	47"W x 28"D x 29 1/2"H	51#	$601
NEXTL	Left extension	47"W x 28"D x 29 1/2"H	51#	$601

CREDENZA

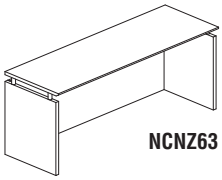
NCNZ63

Model No.	Dimensions	Wt.	List Price
NCNZ63	63"W x 24"D x 29 1/2"H	133#	$1135
NCNZ72	72"W x 24"D x 29 1/2"H	151#	$1223

NAPOLI VENEER SERIES

BRIDGE

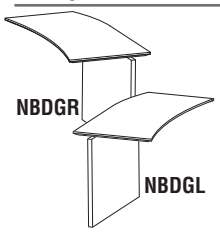

- Not free standing. Requires connection to credenza and desk.
- Features modesty panel.

Model No.	Description	Dimensions	Wt.	List Price
NBDGR	Right Hand Bridge	48"W x 24"D x 29 1/2"H	68#	$714
NBDGL	Left Hand Bridge	48"W x 24"D x 29 1/2"H	68#	$714

HUTCH

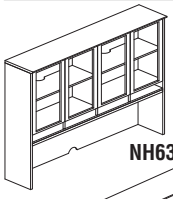

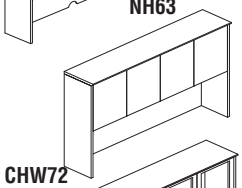

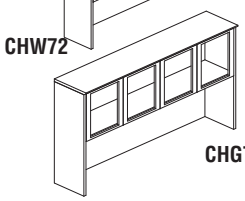

- Clear glass doors with silver frames.
- Four open compartment slots accept optional trays (See Hutch Trays).
- Provides 19 3/4"H clearance below shelf.
- Two, 12"H storage levels.
- Fully assembled.

Model No.	Dimensions	Wt.	List Price
NH63	63"W x 15"D x 50 1/2"H	183#	$2439
NH72	72"W x 15"D x 50 1/2"H	209#	$2584
CHW63 (w/Glass Doors)	63 3/4"W x 15"D x 38 1/2"H	160#	$1665
CHG63 (w/Wood Doors)	63 3/4"W x 15"D x 38 1/2"H	160#	$1665
CHW72 (w/Wood Doors)	71 3/4"W x 15"D x 38 1/2"H	172#	$1775
CHG72 (w/Glass Doors)	71 3/4"W x 15"D x 38 1/2"H	172#	$1775

FABRIC PANELS

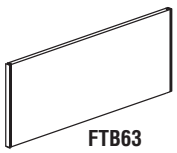

- Stocked in MIR1454 Birch Fabric.
- Other fabrics available as a special order; special orders sold in pairs.

Model No.	Dimensions	Wt.	List Price
FTB63	60"W x 18 1/2"H	15#	$493
FTB72	69"W x 18 1/2"H	16#	$493

HUTCH TASK LIGHT

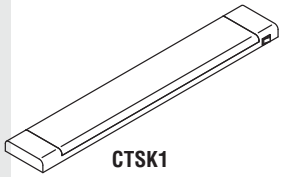

- Task lighting attached to underside of hutch.
- Includes diffuser lens.
- Uses two energy efficient 13W T5 bulb.

Model No.	Description	Dimensions	Wt.	List Price
CTSK1	Task Light	25"W x 4"D x 1"H	5#	$144

HUTCH TRAYS

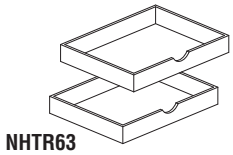

- Sold in pairs.
- Leather inlay.
- Silver.

Model No.	Description	Dimensions	Wt.	List Price
NHTR63	Hutch Trays - 63 (2)	14 5/8"W x 12 3/4"D x 2 3/8"H	7#	$219
NHTR72	Hutch Trays - 72 (2)	15 1/8"W x 12 3/4"D x 2 3/8"H	8#	$219

PEDESTALS

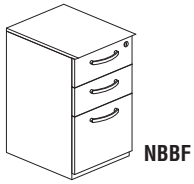

- Drawer interiors finished to match exterior veneer.
- Drawers operate smoothly using full-extension ball-bearing suspensions.
- Fits under credenzas.
- Gang-lock features removable core.
- Finished top surface.

Model No.	Dimensions	Wt.	List Price
NBBF Box-Box File	15 1/4"W x 21 1/4"D x 26"H	80#	$903
NFF File-File	15 1/4"W x 21 1/4"D x 26"H	78#	$860

CENTER DESK DRAWER

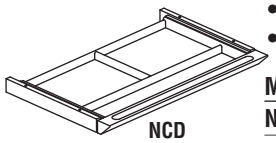

- Solid wood frame construction. Leather lined interior compartments.
- Drawer operates smoothly using full-extension ball-bearing suspension.
- Beveled front edge to match desk surface design

Model No.	Dimensions	Wt.	List Price
NCD	30"W x 18"D x 2"H Assembled	10#	$245

NAPOLI VENEER SERIES

MOBILE PEDESTALS

- Choice of two styles featuring two file drawers or two box drawers and one file drawer.
- File drawers accommodate letter and legal sized hanging file folders.
- Includes counter-weight for stability when in use.
- Drawers operate smoothly using full-extension ball-bearing suspensions.
- Gang-lock features removable core enabling keyed-alike suites.
- 2" dual-hooded casters. (2 lock, 2 non-lock)

VBBF

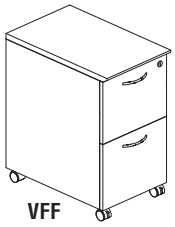
VFF

Model No.	Description	Dimensions	Wt.	List Price
VBBF	Box-Box-File	15 1/4"W x 24"D x 27 1/2"H Assembled	92#	$879
VFF	File-File	15 1/4"W x 24"D x 27 1/2"H Assembled	80#	$853

LATERAL FILE

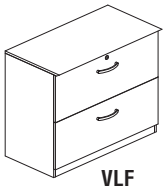
VLF

- Accommodate letter and legal sized hanging file folders.
- Includes counter-weight for stability when in use.
- Gang-lock features removable core enabling keyed-alike suites.
- Drawers operate smoothly using full-extension ball-bearing suspensions.

Model No.	Description	Dimensions	Wt.	List Price
VLF	File-File	36"W x 19"D x 29 1/2"H Assembled	160#	$1542

WARDROBE CABINETS

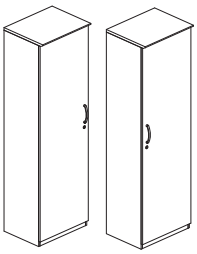
VWRDL VWRDR

- Choice of units with hinges on left or right.
- Interior features sliding wardrobe hanging bar.
- Includes one fixed shelf and three adjustable shelves. (1 1/4" increments)

Model No.	Description	Dimensions	Wt.	List Price
VWRDL	Hinges on left	23 5/8"W x 19"D x 80"H	187#	$1694
VWRDR	Hinges on right	23 5/8"W x 19"D x 80"H	187#	$1694

HIGH WALL CABINET WITH DOORS

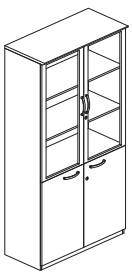
VHC

- Features glass doors with silver frame above wood doors.
- Top and bottom doors lock separately. Keyed alike.
- Includes two adjustable shelves in top section and one adjustable shelf in lower section.
- Able to stand alone or be flanked by Wardrobe Cabinets.

Model No.	Dimensions	Wt.	List Price
VHC	40"W x 19"D x 80"H	284#	$2695

68" WALL CABINET

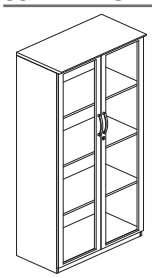
VCG

- Storage unit with choice of wood doors or glass doors.
- Includes one fixed shelf and two adjustable shelves.

Model No.	Description	Dimensions	Wt.	List Price
VCW*	With wood doors	36"W x 19"D x 68"H	235#	$1884
VCG	With glass doors	36"W x 19"D x 68"H	253#	$1884

***Note:** Limited quantities available.

NAPOLI VENEER SERIES

LOW WALL CABINET WITH DOORS

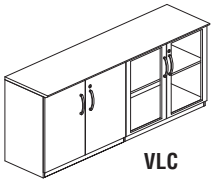
VLC

- Features a choice of wood/glass, all-wood, or all-glass door sets.
- Sets of doors lock separately. Keyed alike.
- Includes one adjustable shelf on each side.

Model No.	Description	Dimensions	Wt.	List Price
VLC	Wood/Glass Door Combination	72"W x 19"D x 29 1/2"H	193#	$1819
VLCW	All Wood Doors	72"W x 19"D x 29 1/2"H	193#	$1819
VLCG	All Glass Doors	72"W x 19"D x 29 1/2"H	193#	$1819

BOOKCASES

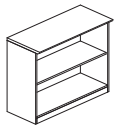
VB2

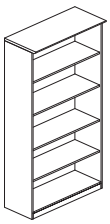
VB5

- Open shelves for convenient storage.
- Adjustable shelves.
- Choice of two or five shelf units.
- 1" thick shelves.
- VB2 & VB5 support 75 lbs. per shelf, evenly distributed; VBQ2 & VBQ5 support 25 lbs. per shelf, evenly distributed

Model No.	Description	Dimensions	Wt.	List Price
VB2	2 Shelf	36"W x 16"D x 29 1/2"H	64#	$749
VB5	5 Shelf	36"W x 16"D x 68"H	140#	$1451
VBQ2	2 Shelf 1/4 - Round	19"W x 19"D x 29 1/2"H	25#	$704
VBQ5*	5 Shelf 1/4 - Round	19"W x 19"D x 68"H	65#	$1369

***Note:** Limited quantities available.

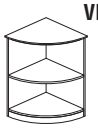
VBQ2

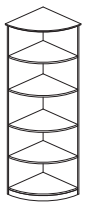
VBQ5

NAPOLI RECEPTION FURNITURE

First impressions are critical for any business. The Napoli Reception Furniture is available in three finishes, and features AA-grade North American hardwood veneers throughout.

Surfaces: Sierra Cherry finish on cherry veneer, Mahogany finish on walnut veneer and Golden Cherry finish on beech veneer.

- All Napoli Reception Stations (except NRS) include a center drawer.
- Non-handed return.
- 3/4" frosted, tempered glass.
- Universal ADA Reception Return can only be used with Napoli Reception Station.

Model No.	Description	Dimensions	Wt.	List Price
NRS	Reception Station (no peds)	87 1/4"W x 37 1/4"D x 42 3/4"H	398#	$3228
NRSBF	Reception Station w/B/B/F, F/F	87 1/4"W x 37 1/4"D x 42 3/4"H	577#	$5150
NRSBB	Reception Station w/2-B/B/F	87 1/4"W x 37 1/4"D x 42 3/4"H	562#	$5179
NRSLBF	Reception Station w/B/B/F, F/F	87 1/4"W x 37 1/4"D x 42 3/4"H Desk 48"W x 25"D x 39 1/4"H Return	980#	$6752
NRSLBB	Reception Station w/2-B/B/F	87 1/4"W x 37 1/4"D x 42 3/4"H Desk 48"W x 25"D x 39 1/4"H Return	980#	$6764
NRSLFF	Reception Station w/2-F/F	87 1/4"W x 37 1/4"D x 42 3/4"H Desk 48"W x 25"D x 39 1/4"H Return	980#	$6723
NRSLBA	Reception Station w/1-B/B/F Universal ADA Return	87 1/4"W x 37 1/4"D x 42 3/4"H Desk 38"W x 20 1/2"D x 28 3/4"H Return	553#	$4803
NRTNA	Universal ADA Return	38"W x 20 1/2"D x 28 3/4"H	64#	$477

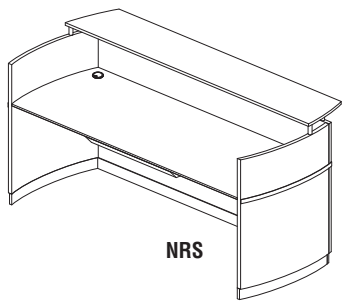
NRS

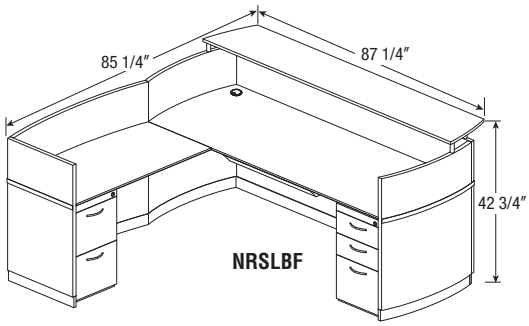

NRSLBF

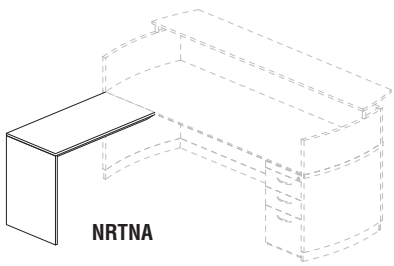
NRTNA

NAPOLI VENEER SERIES

NAPOLI CONFERENCE TABLES

The Napoli veneer conference room furniture features elegant lines with excellent durability. Available in three rich finishes, REAL Office Furniture features AA-grade select North American hardwood veneers throughout.

Surfaces: Sierra Cherry finish on cherry veneer, Mahogany finish on walnut veneer and Golden Cherry finish on beech veneer.

- All veneer surfaces are protected with two coats of high-tech catalyzed lacquer.
- Grommet hole cutout size is 2 3/4" x 6".

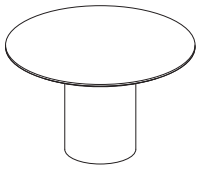

NCR48

Model No.	Description	Dimensions	Wt.	List Price
NC6	6' Conference Table	72"W x 36"D x 29 1/2"H	197#	$1832
NC8	8' Conference Table	96"W x 42"D x 29 1/2"H	236#	$2278
NC10	10' Conference Table	120"W x 48"D x 29 1/2"H	306#	$3224
NC12	12' Conference Table	144"W x 54"D x 29 1/2"H	358#	$5256
NC14	14' Conference Table	168"W x 54"D x 29 1/2"H	399#	$5502
NC18	18' Conference Table	216"W x 54"D x 29 1/2"H	545#	$7853
NC20	20' Conference Table	240"W x 54"D x 29 1/2"H	585#	$8098
NC24	24' Conference Table	288"W x 54"D x 29 1/2"H	732#	$10450
NC26	26' Conference Table	312"W x 54"D x 29 1/2"H	772#	$10694
NC30	30' Conference Table	360"W x 54"D x 29 1/2"H	919#	$13047
NCR48	Round Conference Table	48" Round x 29 1/2"H	135#	$1514
CTMB	Presentation Board	48" x 48" x 3 1/4"	110#	$1467

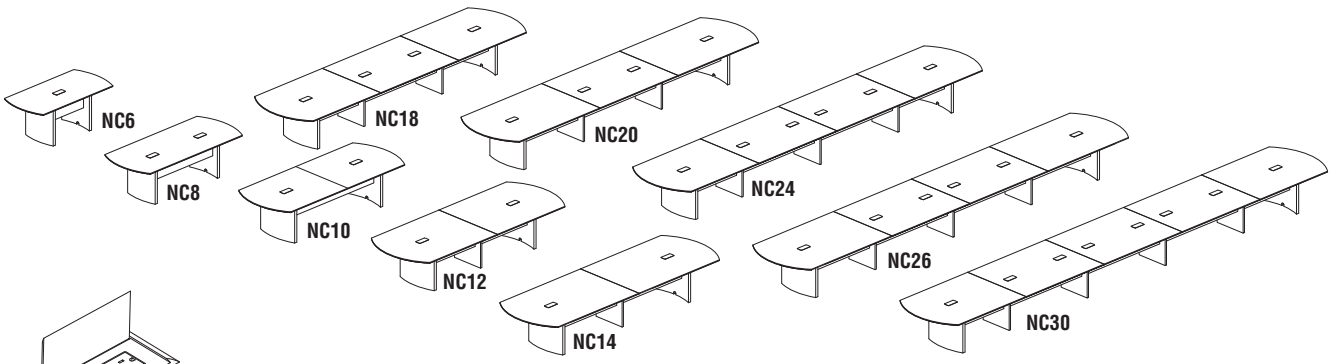

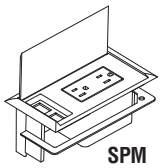

SPM

Model No.	Description	List Price
SPM UL LISTED	6 1/4"W x 4"D x 1 1/2"H Optional Power Module, UL Listed [includes RJ11-Cat 3 coupler (phone) and RJ45 coupler (data)] – 6' power cord. Black only.	$284

BUFFET

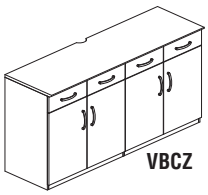

VBCZ

- Features two cabinet compartments (one adjustable shelf in each) and four drawers.
- Designed for audio/visual support including cable pass throughs and inset back panel for wall plug clearance.
- All drawer and cabinet interiors are full-finished veneer.

Model No.	Dimensions	Wt.	List Price
VBCZ	72"W x 22"D x 36"H	297#	$2914

REPLACEMENT LOCK CORES

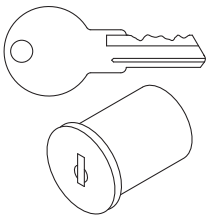

- Allows pedestals and laterals to be keyed uniquely for up to 10 different workstations.
- Master key available.
- Must purchase a core removal tool to change locks cores.

Model No.	Description	Wt.	List Price
REALCC0311 through **REALCC0325** (Silver)	Replacement core with keys	1#	$21
REALCRK	Core removal tool	1#	$22
REALCMK	Master Key	1#	$21

NAPOLI VENEER SERIES TYPICALS

- Order complete suites using "NT__" models.

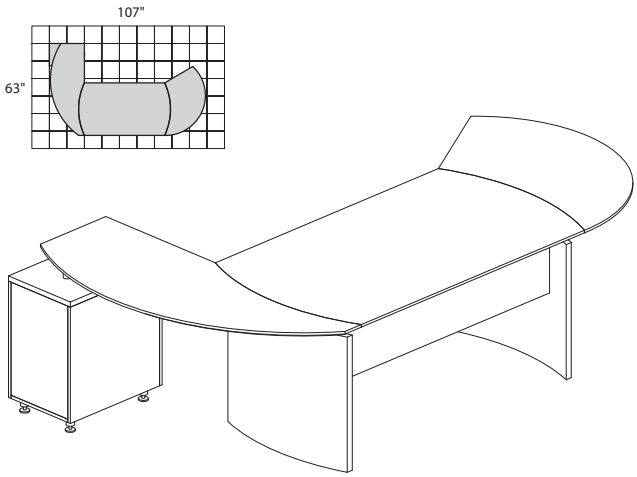

NAPOLI SERIES – SUITE #1

Consists of:

QTY.	MODEL NO.	DESCRIPTION	LIST PRICE EACH
1	**ND63**	63"W Desk	$1310
1	**NEXTL**	Curved Desk Ext.	$601
1	**NRTPR**	Curved Desk Return w/Pencil-Box-File	$1324
1	**NCD**	Center Drawer	$245

NT1 **TOTAL: $3480**

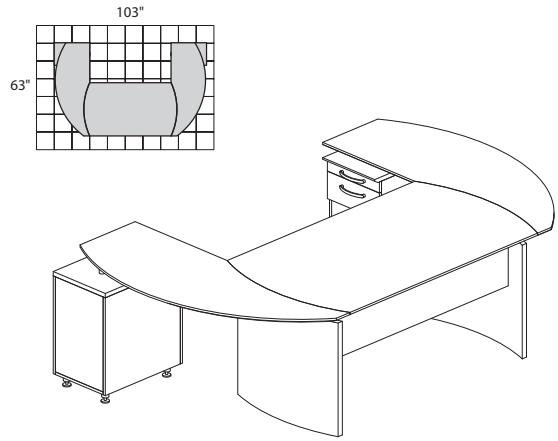

NAPOLI SERIES – SUITE #3

Consists of:

QTY.	MODEL NO.	DESCRIPTION	LIST PRICE EACH
1	**ND63**	63"W Desk	$1310
1	**NRTPR**	Curved Desk Return w/Pencil-Box-File	$1324
1	**NRTPL**	Curved Desk Return w/Pencil-Box-File	$1324
1	**NCD**	Center Drawer	$245

NT3 **TOTAL: $4203**

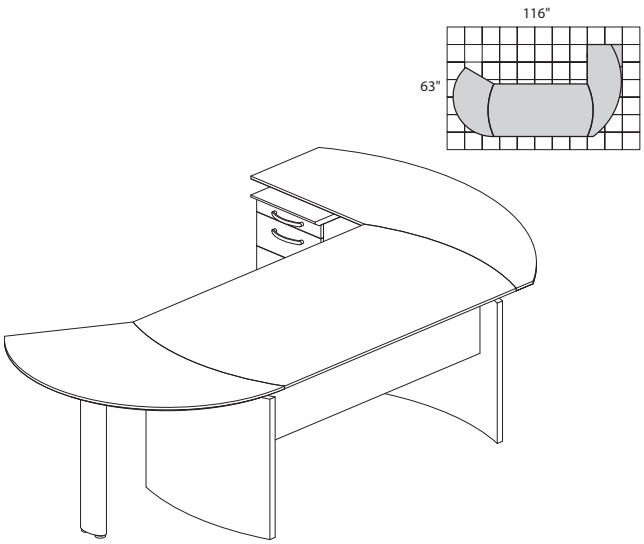

NAPOLI SERIES – SUITE #5

Consists of:

QTY.	MODEL NO.	DESCRIPTION	LIST PRICE EACH
1	**ND72**	72"W Desk	$1416
1	**NEXTR**	Curved Desk Ext.	$601
1	**NRTPL**	Curved Desk Return w/Pencil-Box-File	$1324
1	**NCD**	Center Drawer	$245

NT5 **TOTAL: $3586**

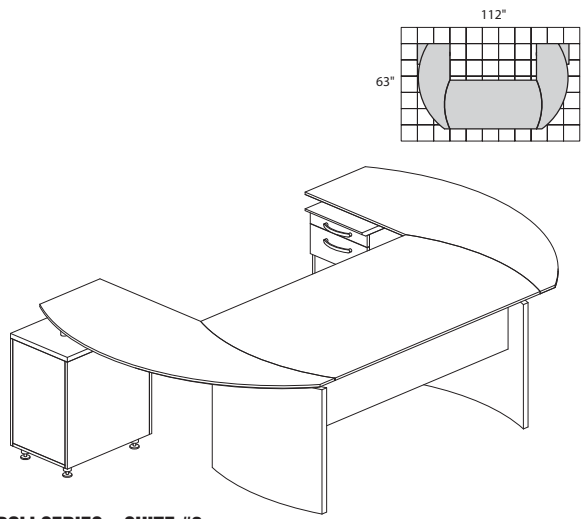

NAPOLI SERIES – SUITE #6

Consists of:

QTY.	MODEL NO.	DESCRIPTION	LIST PRICE EACH
1	**ND72**	72"W Desk	$1416
1	**NRTPR**	Curved Desk Return w/Pencil-Box-File	$1324
1	**NRTPL**	Curved Desk Return w/Pencil-Box-File	$1324
1	**NCD**	Center Drawer	$245

NT6 **TOTAL: $4309**

NAPOLI VENEER SERIES TYPICALS

- Order complete suites using "NT__" models.

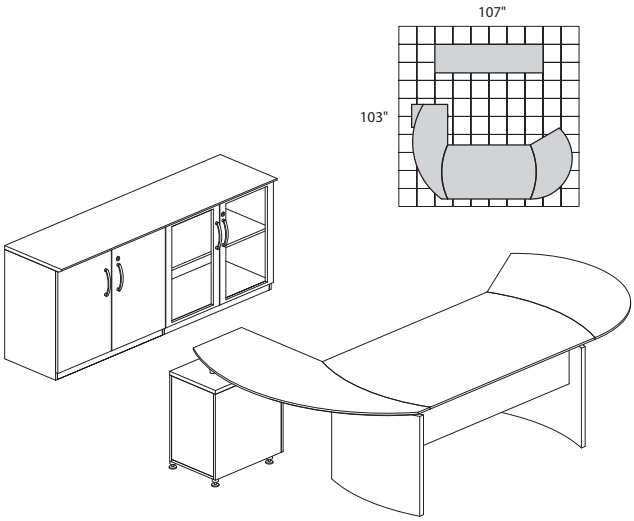

NAPOLI SERIES – SUITE #7

Consists of:

QTY.	MODEL NO.	DESCRIPTION	LIST PRICE EACH
1	**ND63**	63"W Desk	$1310
1	**NEXTL**	Curved Desk Ext.	$601
1	**NRTPR**	Curved Desk Return w/Pencil-Box-File	$1324
1	**NCD**	Center Drawer	$245
1	**VLC**	Low Wall Cabinet	$1819

NT7 **TOTAL: $5299**

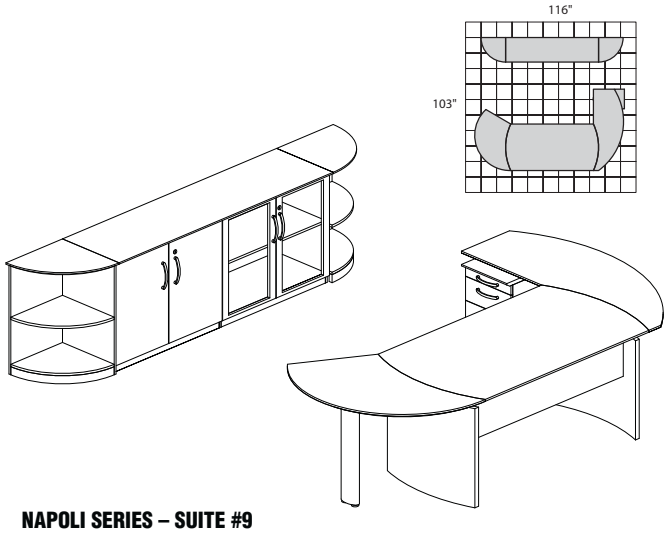

NAPOLI SERIES – SUITE #9

Consists of:

QTY.	MODEL NO.	DESCRIPTION	LIST PRICE EACH
1	**ND72**	72"W Desk	$1416
1	**NEXTR**	Curved Desk Ext.	$601
1	**NRTPL**	Curved Desk Return w/Pencil-Box-File	$1324
1	**NCD**	Center Drawer	$245
1	**VLC**	Low Wall Cabinet	$1819
1	**VBQ2**	2 Shelf 1/4-Round	$704
1	**VBQ2**	2 Shelf 1/4-Round	$704

NT9 **TOTAL: $6813**

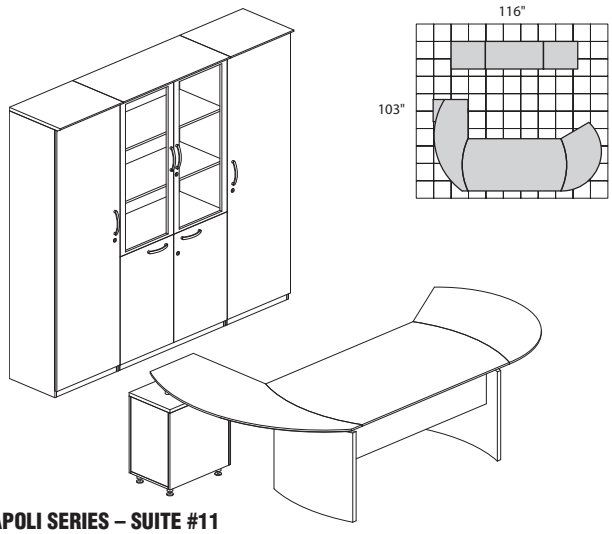

NAPOLI SERIES – SUITE #11

Consists of:

QTY.	MODEL NO.	DESCRIPTION	LIST PRICE EACH
1	**ND72**	72"W Desk	$1416
1	**NEXTL**	Curved Desk Ext.	$601
1	**NRTPR**	Curved Desk Return w/Pencil-Box-File	$1324
1	**NCD**	Center Drawer	$245
1	**VWRDL**	Wardrobe Cabinet	$1694
1	**VWRDR**	Wardrobe Cabinet	$1694
1	**VHC**	High Wall Cabinet	$2695

NT11 **TOTAL: $9669**

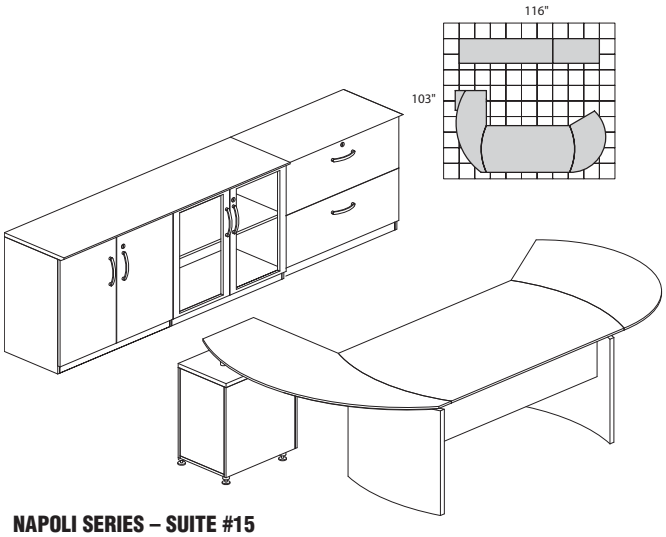

NAPOLI SERIES – SUITE #15

Consists of:

QTY.	MODEL NO.	DESCRIPTION	LIST PRICE EACH
1	**ND72**	72"W Desk	$1416
1	**NEXTL**	Curved Desk Ext.	$601
1	**NRTPR**	Curved Desk Return w/Pencil-Box-File	$1324
1	**NCD**	Center Drawer	$245
1	**VLC**	Low Wall Cabinet	$1819
1	**VLF**	Lateral File	$1542

NT15 **TOTAL: $6947**

NAPOLI VENEER SERIES TYPICALS

- Order complete suites using "NT__" models.

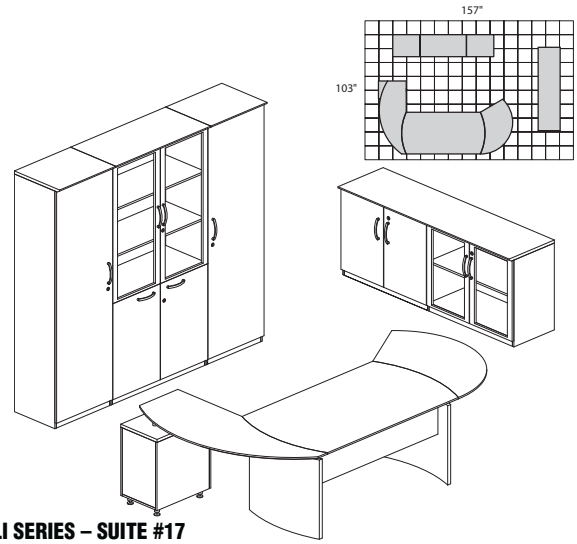

NAPOLI SERIES – SUITE #17

Consists of:

QTY.	MODEL NO.	DESCRIPTION	LIST PRICE EACH
1	**ND72**	72"W Desk	$1416
1	**NEXTL**	Curved Desk Ext.	$601
1	**NRTPR**	Curved Desk Return w/Pencil-Box-File	$1324
1	**NCD**	Center Drawer	$245
1	**VLC**	Low Wall Cabinet	$1819
1	**VWRDL**	Wardrobe Cabinet	$1694
1	**VWRDR**	Wardrobe Cabinet	$1694
1	**VHC**	High Wall Cabinet	$2695

NT17 **TOTAL: $11488**

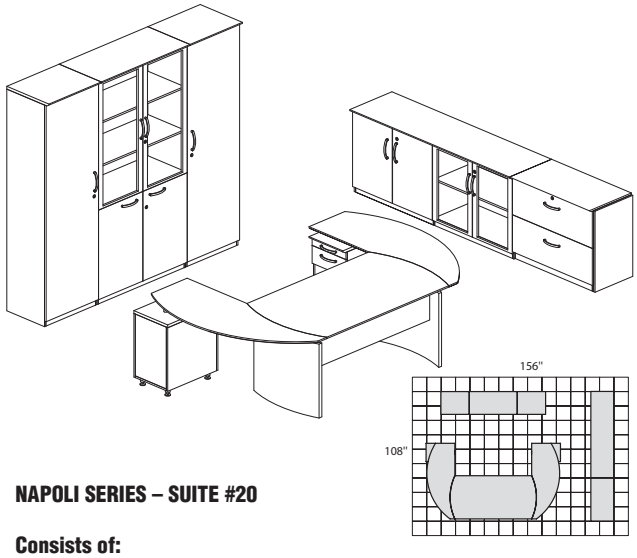

NAPOLI SERIES – SUITE #20

Consists of:

QTY.	MODEL NO.	DESCRIPTION	LIST PRICE EACH
1	**ND72**	72"W Desk	$1416
1	**NRTPR**	Curved Desk Return w/Pencil-Box-File	$1324
1	**NRTPL**	Curved Desk Return w/Pencil-Box-File	$1324
1	**NCD**	Center Drawer	$245
1	**VWRDL**	Wardrobe Cabinet	$1694
1	**VWRDR**	Wardrobe Cabinet	$1694
1	**VHC**	High Wall Cabinet	$2695
1	**VLC**	Low Wall Cabinet	$1819
1	**VLF**	Lateral File	$1542

NT20 **TOTAL: $13753**

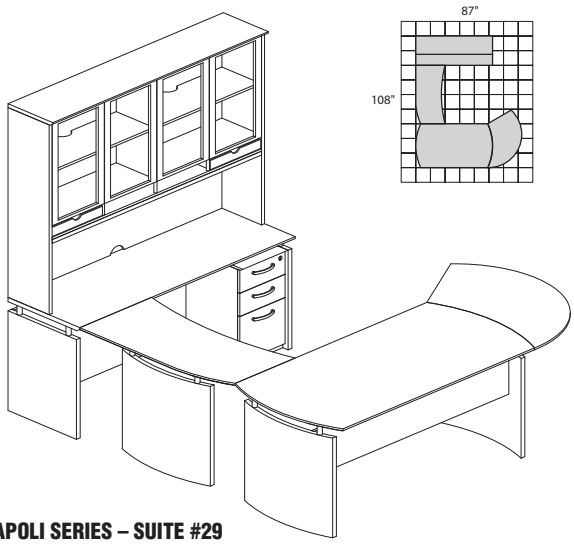

NAPOLI SERIES – SUITE #29

Consists of:

QTY.	MODEL NO.	DESCRIPTION	LIST PRICE EACH
1	**ND63**	63"W Desk	$1310
1	**NEXTL**	Curved Desk Ext.	$601
1	**NCD**	Center Drawer	$245
1	**NBDGR**	Bridge Right-Hand	$714
1	**NCNZ63**	63"W Credenza	$1135
1	**NH63**	63"W Hutch	$2439
1	**NBBF**	Box Box File	$903
1	**NHTR63**	Pair of Trays	$219

NT29 **TOTAL: $7566**

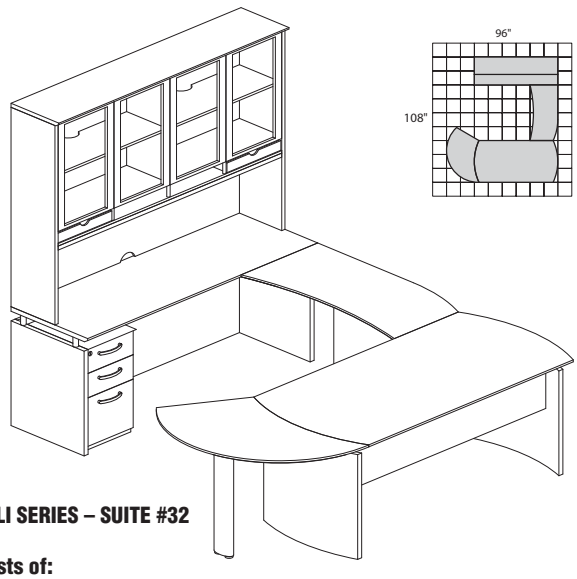

NAPOLI SERIES – SUITE #32

Consists of:

QTY.	MODEL NO.	DESCRIPTION	LIST PRICE EACH
1	**ND72**	72"W Desk	$1416
1	**NEXTR**	Curved Desk Ext.	$601
1	**NCD**	Center Drawer	$245
1	**NBDGL**	Bridge Left-Hand	$714
1	**NCNZ72**	72"W Credenza	$1223
1	**NH72**	72"W Hutch	$2584
1	**NBBF**	Box Box File	$903
1	**NHTR72**	Pair of Trays	$219

NT32 **TOTAL: $7905**

NAPOLI VENEER SERIES TYPICALS

- Order complete suites using "NT__" models.

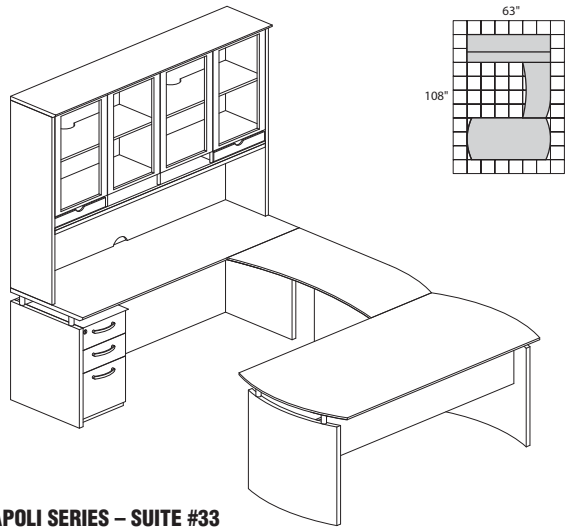

NAPOLI SERIES – SUITE #33

Consists of:

QTY.	MODEL NO.	DESCRIPTION	LIST PRICE EACH
1	**ND63**	63"W Desk	$1310
1	**NCD**	Center Drawer	$245
1	**NBDGL**	Bridge Left-Hand	$714
1	**NCNZ63**	63"W Credenza	$1135
1	**NH63**	63"W Hutch	$2439
1	**NBBF**	Box Box File	$903
1	**NHTR63**	Pair of Trays	$219

NT33 **TOTAL: $6965**

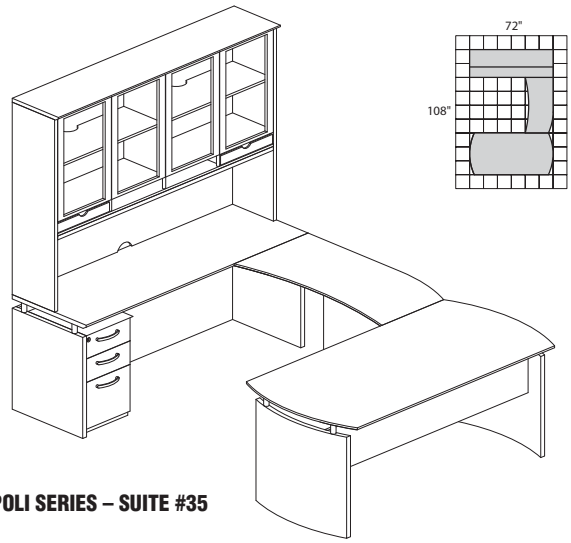

NAPOLI SERIES – SUITE #35

Consists of:

QTY.	MODEL NO.	DESCRIPTION	LIST PRICE EACH
1	**ND72**	72"W Desk	$1416
1	**NCD**	Center Drawer	$245
1	**NBDGL**	Bridge Left-Hand	$714
1	**NCNZ72**	72"W Credenza	$1223
1	**NH72**	72"W Hutch	$2584
1	**NBBF**	Box Box File	$903
1	**NHTR72**	Pair of Trays	$219

NT35 **TOTAL: $7304**

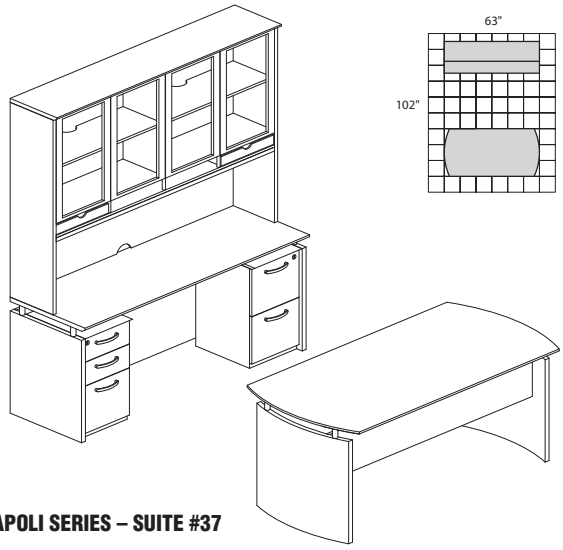

NAPOLI SERIES – SUITE #37

Consists of:

QTY.	MODEL NO.	DESCRIPTION	LIST PRICE EACH
1	**ND63**	63"W Desk	$1310
1	**NCD**	Center Drawer	$245
1	**NCNZ63**	63"W Credenza	$1135
1	**NH63**	63"W Hutch	$2439
1	**NBBF**	Box Box File	$903
1	**NFF**	File File Ped	$860
1	**NHTR63**	Pair of Trays	$219

NT37 **TOTAL: $7111**

NAPOLI VENEER SERIES TYPICALS

- Order complete suites using "NT__" models.

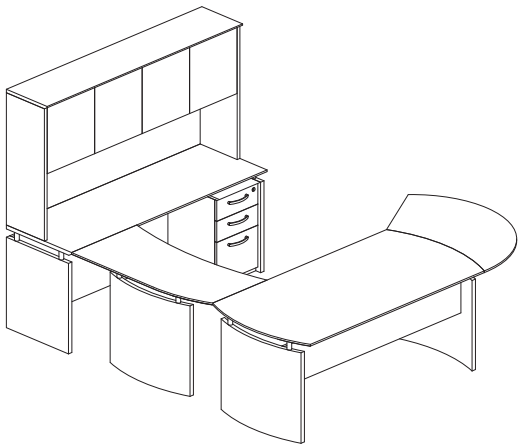

NAPOLI SERIES – SUITE #43

Consists of:

QTY.	MODEL NO.	DESCRIPTION	LIST PRICE EACH
1	**ND63**	63"W Desk	$1310
1	**NEXTL**	Curved Desk Ext.	$601
1	**NCD**	Center Drawer	$245
1	**NBDGR**	Bridge Right-Hand	$714
1	**NCNZ63**	63"W Credenza	$1135
1	**CHW63**	63"W Hutch	$1665
1	**NBBF**	Box Box File	$903

NT43 **TOTAL: $6573**

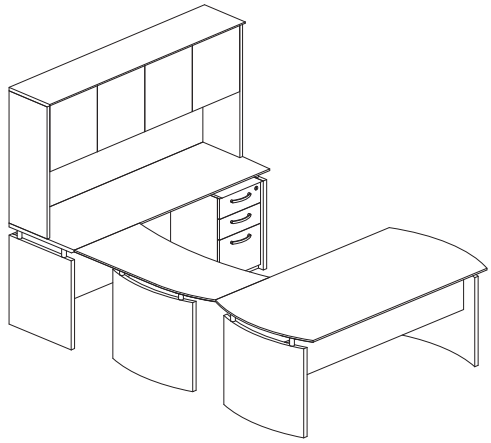

NAPOLI SERIES – SUITE #44

Consists of:

QTY.	MODEL NO.	DESCRIPTION	LIST PRICE EACH
1	**ND63**	63"W Desk	$1310
1	**NCD**	Center Drawer	$245
1	**NBDGR**	Bridge Right-Hand	$714
1	**NCNZ63**	63"W Credenza	$1135
1	**CHW63**	63"W Hutch	$1665
1	**NBBF**	Box Box File	$903

NT44 **TOTAL: $5972**

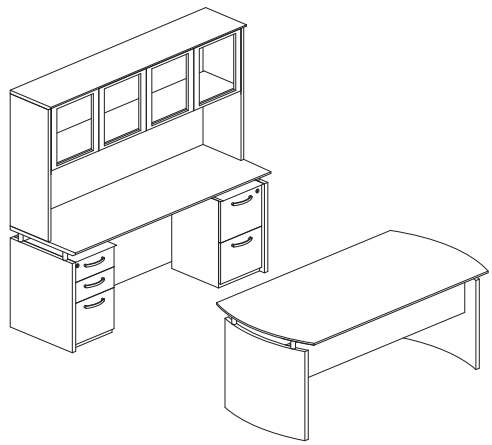

NAPOLI SERIES – SUITE #45

Consists of:

QTY.	MODEL NO.	DESCRIPTION	LIST PRICE EACH
1	**ND72**	72"W Desk	$1416
1	**NCD**	Center Drawer	$245
1	**NCNZ72**	72"W Credenza	$1223
1	**CHW72**	72"W Hutch	$1775
1	**NBBF**	Box Box File	$903
1	**NFF**	File File Ped	$860

NT45 **TOTAL: $6422**

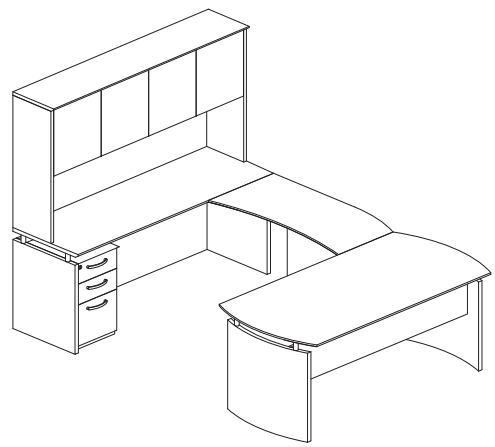

NAPOLI SERIES – SUITE #46

Consists of:

QTY.	MODEL NO.	DESCRIPTION	LIST PRICE EACH
1	**ND72**	72"W Desk	$1416
1	**NCD**	Center Drawer	$245
1	**NBDGL**	Bridge Left-Hand	$714
1	**NCNZ72**	72"W Credenza	$1223
1	**CHW72**	72"W Hutch	$1775
1	**NBBF**	Box Box File	$903

NT46 **TOTAL: $6276**

SORRENTO VENEER SERIES

GIZA/CAP | FAST Freight | QUICK-SHIP

SORRENTO DESK SERIES

The Sorrento veneer desking system is a transitional line of wood office furniture for executive offices, individual workspaces, conference rooms and reception areas. This line combines a high end look and technology-friendly features. Sorrento uses AA-grade North American Hardwood veneers throughout.
Surface: Choice of Espresso finish on Walnut veneer, or Bourbon Cherry finish on cherry veneer border and walnut inlays bordering Bird's Eye Maple panels.

- For Bourbon Cherry finish, all horizontal desking surfaces feature hardwood inlays and Bird's Eye maple panels.
- All cabinet/drawer interiors and backs are fully finished.
- All locks are keyed alike and feature removable cores for installing "keyed different" locks after market.
- Center drawers are optional.
- All floor supported models include steel threaded leveling glides.
- All models in all finishes are available on both the Quick-Ship and Fast Freight delivery programs with no quantity limitations.

FREESTANDING DESKS

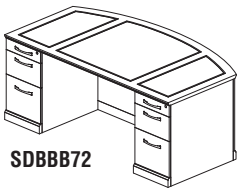
SDBBB72

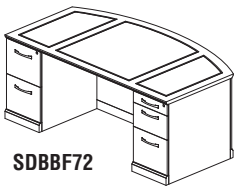
SDBBF72

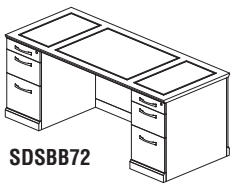
SDSBB72

- Choose either two Pencil/Box/Files or a combination of a Pencil/Box/File and a File/File pedestal. All Freestanding Pedestals are universal.

Model No.	Description	Dimensions	Wt.	List Price
SDBBB72	Double Pedestal Desk, Bow Front, PBF/PBF	72"W x 39"D x 29 1/2"H	310#	$3707
SDBBF72	Double Pedestal Desk, Bow Front, PBF/FF	72"W x 39"D x 29 1/2"H	307#	$3624
SDSBB72	Double Pedestal Desk, Straight Front, PBF/PBF	72"W x 30"D x 29 1/2"H	289#	$3511
SDSBF72	Double Pedestal Desk, Straight Front, PBF/FF	72"W x 30"D x 29 1/2"H	287#	$3428

Model No.	Description	Dimensions	Wt.	List Price
STD72	Table Desk with built in center drawer	72"W x 36"D x 29 1/2"H	144#	$1735
SCD	Center Drawer for Desks and Credenzas	30"W x 21 1/4"D x 2 1/2"H	21#	$392

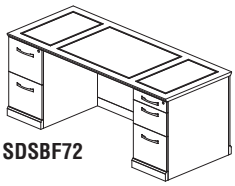
SDSBF72

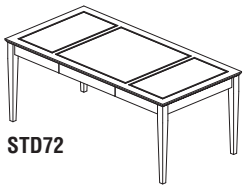
STD72

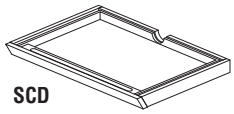
SCD

FREESTANDING CREDENZAS

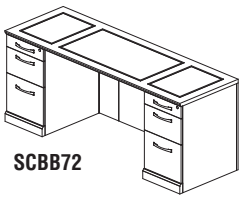
SCBB72

- All Credenzas feature a technology access panel for convenient connectivity.

Model No.	Description	Dimensions	Wt.	List Price
SCBB72	Double Pedestal Credenza, PBF/PBF	72"W x 24"D x 29 1/2"H	257#	$3160
SCBF72	Double Pedestal Credenza, PBF/FF	72"W x 24"D x 29 1/2"H	255#	$3077
SCFF72	Double Pedestal Credenza, FF/FF	72"W x 24"D x 29 1/2"H	253#	$2994

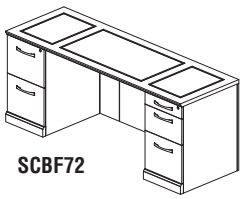
SCBF72

SORRENTO VENEER SERIES

U-SHAPED CONFIGURATIONS

- All credenzas and bridges feature a technology access panel for convenient connectivity.
- Offered in choice of left-handed and right-handed U-configurations.

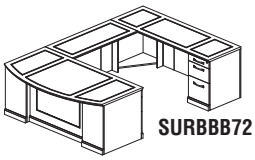
SURBBB72

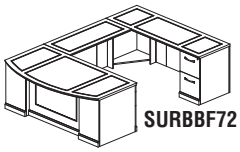
SURBBF72

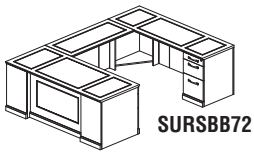
SURSBB72

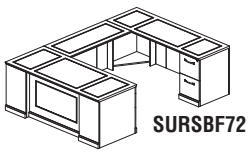
SURSBF72

Model No.	Description	Dimensions	Wt.	List Price
SURBBB72	Executive "U," Bowfront, Right Bridge	72"W x 39"D x 29 1/2"H Desk	536#	$6182
	PBF-Desk, PBF-Credenza	48"W x 20"D x 29 1/2"H Bridge		
		72"W x 24"D x 29 1/2"H Credenza		
SULBBB72	Executive "U," Bowfront, Left Bridge	72"W x 39"D x 29 1/2"H Desk	536#	$6182
	PBF-Desk, PBF-Credenza	48"W x 20"D x 29 1/2"H Bridge		
		72"W x 24"D x 29 1/2"H Credenza		
SURBBF72	Executive "U," Bowfront, Right Bridge	72"W x 39"D x 29 1/2"H Desk	533#	$6099
	PBF-Desk, FF-Credenza	48"W x 20"D x 29 1/2"H Bridge		
		72"W x 24"D x 29 1/2"H Credenza		
SULBBF72	Executive "U," Bowfront, Left Bridge	72"W x 39"D x 29 1/2"H Desk	533#	$6099
	PBF-Desk, FF-Credenza	48"W x 20"D x 29 1/2"H Bridge		
		72"W x 24"D x 29 1/2"H Credenza		
SURSBB72	Executive "U," Straight Front, Right Bridge	72"W x 30"D x 29 1/2"H Desk	523#	$5986
	PBF-Desk, PBF-Credenza	48"W x 20"D x 29 1/2"H Bridge		
		72"W x 24"D x 29 1/2"H Credenza		
SULSBB72	Executive "U," Straight Front, Left Bridge	72"W x 30"D x 29 1/2"H Desk	523#	$5986
	PBF-Desk, PBF-Credenza	48"W x 20"D x 29 1/2"H Bridge		
		72"W x 24"D x 29 1/2"H Credenza		
SURSBF72	Executive "U," Straight Front, Right Bridge	72"W x 30"D x 29 1/2"H Desk	520#	$5903
	PBF-Desk, FF-Credenza	48"W x 20"D x 29 1/2"H Bridge		
		72"W x 24"D x 29 1/2"H Credenza		
SULSBF72	Executive "U," Straight Front, Left Bridge	72"W x 30"D x 29 1/2"H Desk	520#	$5903
	PBF-Desk, FF-Credenza	48"W x 20"D x 29 1/2"H Bridge		
		72"W x 24"D x 29 1/2"H Credenza		

L-SHAPED CONFIGURATIONS

- All returns feature a technology access panel for convenient connectivity.
- Offered in choice of left-handed and right-handed L-configurations.

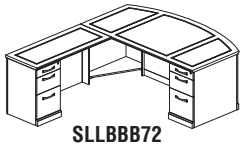
SLLBBB72

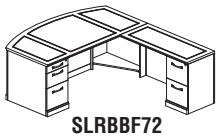
SLRBBF72

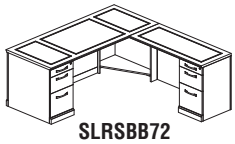
SLRSBB72

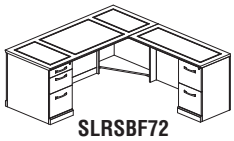
SLRSBF72

Model No.	Description	Dimensions	Wt.	List Price
SLRBBB72	Executive "L," Bowfront, Right Return	72"W x 39"D x 29 1/2"H Desk	389#	$4684
	PBF-Desk, PBF-Return	48"W x 20"D x 29 1/2"H Return		
SLLBBB72	Executive "L," Bowfront, Left Return	72"W x 39"D x 29 1/2"H Desk	389#	$4684
	PBF-Desk, PBF-Return	48"W x 20"D x 29 1/2"H Return		
SLRBBF72	Executive "L," Bowfront, Right Return	72"W x 39"D x 29 1/2"H Desk	386#	$4586
	PBF-Desk, FF-Return	48"W x 20"D x 29 1/2"H Return		
SLLBBF72	Executive "L," Bowfront, Left Return	72"W x 39"D x 29 1/2"H Desk	386#	$4586
	PBF-Desk, FF-Return	48"W x 20"D x 29 1/2"H Return		
SLRSBB72	Executive "L," Straight Front, Right Return	72"W x 39"D x 29 1/2"H Desk	376#	$4488
	PBF-Desk, PBF-Return	48"W x 20"D x 29 1/2"H Return		
SLLSBB72	Executive "L," Straight Front, Left Return	72"W x 30"D x 29 1/2"H Desk	376#	$4488
	PBF-Desk, PBF-Return	48"W x 20"D x 29 1/2"H Return		
SLRSBF72	Executive "L," Straight Front, Right Return	72"W x 30"D x 29 1/2"H Desk	373#	$4390
	PBF-Desk, FF-Return	48"W x 20"D x 29 1/2"H Return		
SLLSBF72	Executive "L," Straight Front, Left Return	72"W x 30"D x 29 1/2"H Desk	373#	$4390
	PBF-Desk, FF-Return	48"W x 20"D x 29 1/2"H Return		

SORRENTO VENEER SERIES

HUTCHES

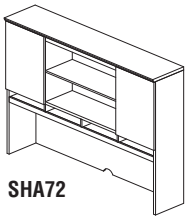
SHA72

- Fully assembled.
- Hutches in Bourbon Cherry have wood doors.
- Optional tasklights are available.
- Clearance between the work surface and bottom shelf is 20 1/4".
- Hutches in Espresso have frosted glass doors.
- Optional Hutch Organizers are sized to fit in space between doors and work surface.
- Middle shelves behind doors adjust to 3 positions on 2 1/2" increments.

Model No.	Description	Dimensions	Wt.	List Price
SHA72	Hutch with Double-Height Doors	72"W x 15"D x 52 1/2"H	246#	$2588
SHH	Hutch Organizer, Horizontal	17 1/2"W x 12 1/2"D x 19 3/4"H	36#	$504
SHV	Hutch Organizer, Vertical	17 1/2"W x 12 1/2"D x 19 3/4"H	36#	$504
CTSK1	Tasklight	25"W x 4"D x 1"H	2#	$144
SHGD	Optional Glass Doors for 72" Hutch (SCR)		30#	$314
SHWD	Optional Wood Doors for 72" Hutch (ESP)		30#	$314

***Note:** Limited quantities of SHA66 in Bourbon Cherry available.

SHH

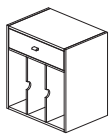
SHV

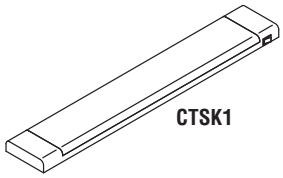
CTSK1

FABRIC PANELS

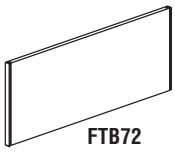
FTB72

- Stocked in MIR1454 Birch Fabric.
- Other fabrics available as a special order; special orders sold in pairs.

Model No.	Dimensions	Wt.	List Price
FTB72	69"W x 18 1/2"H	16#	$493

STORAGE OPTIONS

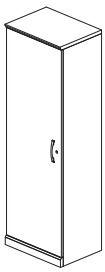
SWRD

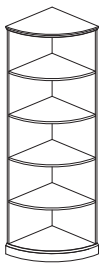
SBQ5

- Low Wall Cabinet has one internal shelf in each compartment that adjusts to 5 different positions on 1 1/4" increments. Does not lock.
- Executive Buffet Cabinet has one internal shelf in each compartment that adjusts to 3 positions and 2 1/2"H increments. Does not lock.
- Lateral files feature interlock system allowing only one drawer to open at a time. Standard gang lock provided.
- SLC and SBUF have wood doors (Bourbon Cherry) or frosted glass doors (Espresso).
- SBQ5 and SB5 have 1" thick shelves.

Model No.	Description	Dimensions	Wt.	List Price
SWRD	Wardrobe Cabinet – Universal	24"W x 18"D x 76"H	168#	$1652
SBQ5	5-Shelf Quarter-Round Bookcase	18"W x 18"D x 70"H	81#	$1245
SB5	5-Shelf Bookcase	36"W x 15"D x 70"H	150#	$1609
SLF2	2-Drawer Lateral File	36"W x 18"D x 29 1/2"H	186#	$1834
SLC	Low Wall Cabinet	72"W x 18"D x 29 1/2"H	235#	$2211
SBUF	Buffet Cabinet	72"W x 22"D x 36"H	294#	$3567

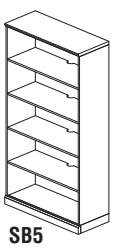
SB5

SLF2

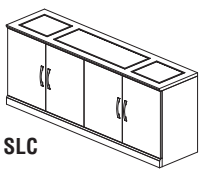
SLC

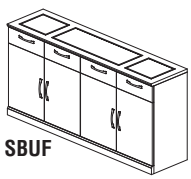
SBUF

RECEPTION STATIONS/OCCASIONAL TABLES

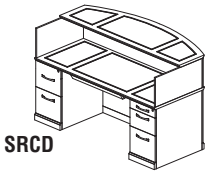
SRCD

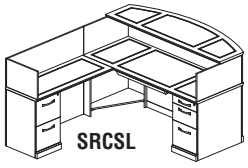
SRCSL

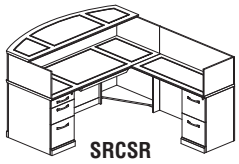
SRCSR

- Reception stations are available with a granite or veneer counter top.
- Configured as either a freestanding double-pedestal desk station or complete with right- or left-handed return.
- Reception stations ship complete as shown. (Counter Organizers sold separately.)
- Reception Counter Organizers can be installed in two directions offering choice of horizontal or vertical openings.

Model No.	Description	Dimensions	Wt.	List Price
SRCD	Reception Desk with Veneer Counter	72"W x 39"D x 45"H	481#	$5045
SRCDM	Reception Desk with Granite Counter	72"W x 39"D x 45"H	532#	$6549
SRCSL	Reception Desk with Veneer Counter	72"W x 39"D x 45"H Desk	583#	$6664
	Left Hand – Return	48"W x 20"D x 43 1/2"H Return		
SRCSLM	Reception Desk with Granite Counter	72"W x 39"D x 45"H Desk	634#	$8168
	Left Hand – Return	48"W x 20"D x 43 1/2"H Return		
SRCSR	Reception Desk with Veneer Counter	72"W x 39"D x 45"H Desk	583#	$6664
	Right Hand – Return	48"W x 20"D x 43 1/2"H Return		
SRCSRM	Reception Desk with Granite Counter	72"W x 39"D x 45"H Desk	634#	$8168
	Right Hand – Return	48"W x 20"D x 43 1/2"H Return		
SSFA	Sofa Table	16"W x 60"D x 30"H	75#	$791
SCFT	Coffee Table – Oval	48"W x 24"D x 15"H	48#	$728
SET	End Table	24"W x 24"D x 24"H	33#	$531

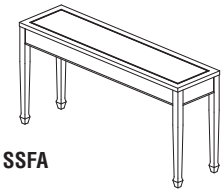
SSFA

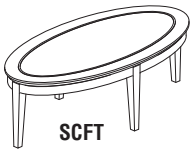
SCFT

SET

RECEPTION STATIONS ADA RETURN

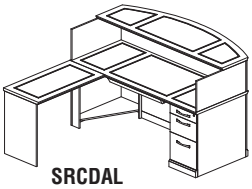
SRCDAL

- All ADA reception stations come with a pencil-box-file pedestal.
- Conforms to ADA accessibility requirements.

Model No.	Description	Dimensions	Wt.	List Price
SRCDAL	Reception Desk with Veneer Counter	72"W x 39"D x 45"H Desk	512#	$5085
	Left Hand – ADA Return	38"W x 24"D x 29 1/2"H Return		
SRCDAR	Reception Desk with Veneer Counter	72"W x 39"D x 45"H Desk	512#	$5085
	Right Hand – ADA Return	38"W x 24"D x 29 1/2"H Return		
SRCDMAL	Reception Desk with Granite Counter	72"W x 39"D x 45"H Desk	563#	$7246
	Left Hand – ADA Return	38"W x 24"D x 29 1/2"H Return		
SRCDMAR	Reception Desk with Granite Counter	72"W x 39"D x 45"H Desk	563#	$7246
	Right Hand – ADA Return	38"W x 24"D x 29 1/2"H Return		

SORRENTO VENEER SERIES

CONFERENCE ROOM TABLES

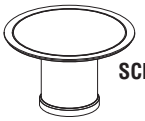

- Color dictates table shape.
- Rectangular shaped conference tables are only available in Bourbon Cherry (SCR) - same list price.
- Boat-shaped conference tables are only available in Espresso (ESP) - same list price.
- Matching presentation board available.

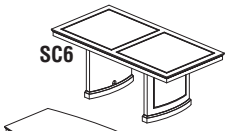

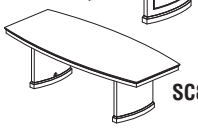

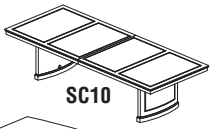

Model No.	Description	Dimensions	Wt.	List Price
SCR48	48" Round Conference Table	48"Dia. x 29 1/2"H	164#	$1690
SC6	6' Rectangular or Boat-Shaped Conference Table	72"W x 36"D x 29 1/2"H	231#	$2721
SC8	8' Rectangular or Boat-Shaped Conference Table	96"W x 42"D x 29 1/2"H	281#	$3132
SC10	10' Rectangular or Boat-Shaped Conference Table	120"W x 48"D x 29 1/2"H	370#	$4382
SC12	12' Rectangular or Boat-Shaped Conference Table	144"W x 54"D x 29 1/2"H	514#	$6321
SC18	18' Rectangular or Boat-Shaped Conference Table	216"W x 54"D x 29 1/2"H	667#	$9482
SC24	24' Rectangular or Boat-Shaped Conference Table	288"W x 54"D x 29 1/2"H	991#	$12642
SC30	30' Rectangular or Boat-Shaped Conference Table	360"W x 54"D x 29 1/2"H	973#	$15803
SCWB	Presentation Board	48"W x 48"H x 3 1/2"d	109#	$1748

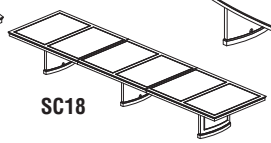

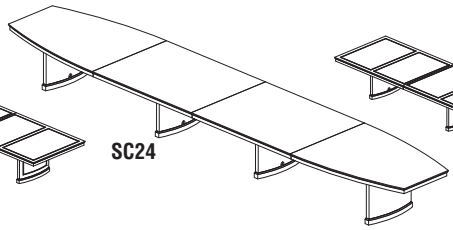

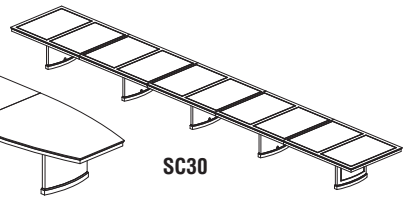

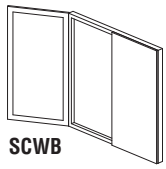

REPLACEMENT LOCK CORES

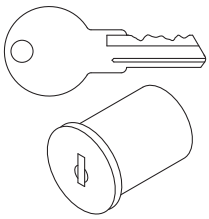

- Allows pedestals and laterals to be keyed uniquely for up to 10 different workstations.
- Master key available.
- Must purchase a core removal tool to change locks cores.

Model No.	Description	Wt.	List Price
REALCC0311B through **REALCC0325B** (Black)	Replacement core with keys	1#	$21
REALCRK	Core removal tool	1#	$22
REALCMK	Master Key	1#	$21

*Order Black replacement lock core for Sorrento Bourbon Cherry (SCR) finish.
Note: Sorrento in Espresso (ESP) finish has a silver replacement lock core (order replacement lock core without the "B")

SORRENTO VENEER SERIES TYPICALS

• Order complete suites using "ST__" models.

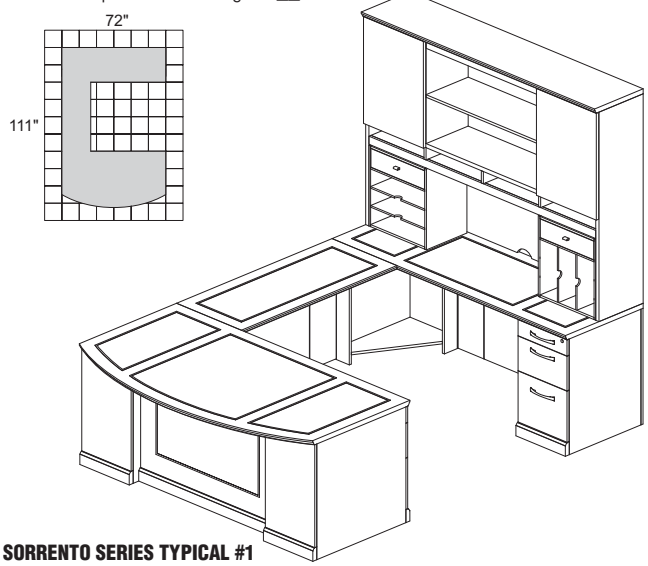

SORRENTO SERIES TYPICAL #1

Consists of:

QTY.	MODEL NO.	DESCRIPTION	LIST PRICE EACH
1	**SURBBB72**	Executive "U," Bowfront, Right Bridge PBF-Desk, PBF-Credenza	$6182
1	**SHA72**	72" Hutch with Double-Height Doors	$2588
1	**SHH**	Hutch Organizer, Horizontal	$504
1	**SHV**	Hutch Organizer, Vertical	$504

ST1 **TOTAL: $9778**

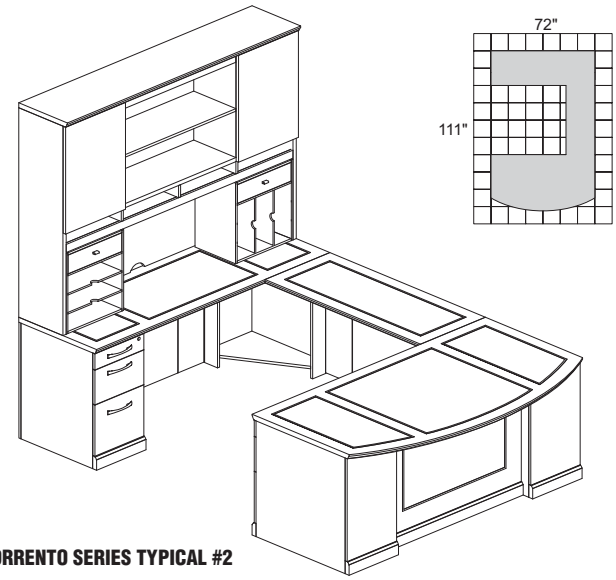

SORRENTO SERIES TYPICAL #2

Consists of:

QTY.	MODEL NO.	DESCRIPTION	LIST PRICE EACH
1	**SULBBB72**	Executive "U," Bowfront, Left Bridge PBF-Desk, FF-Credenza	$6182
1	**SHA72**	72" Hutch with Double-Height Doors	$2588
1	**SHH**	Hutch Organizer, Horizontal	$504
1	**SHV**	Hutch Organizer, Vertical	$504

ST2 **TOTAL: $9778**

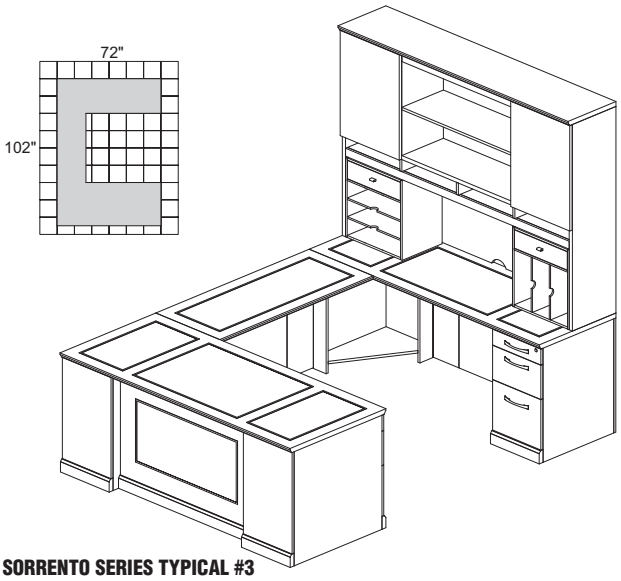

SORRENTO SERIES TYPICAL #3

Consists of:

QTY.	MODEL NO.	DESCRIPTION	LIST PRICE EACH
1	**SURSBB72**	Executive "U," Straight Front, Right Bridge PBF-Desk, PBF-Credenza	$5986
1	**SHA72**	72" Hutch with Double-Height Doors	$2588
1	**SHH**	Hutch Organizer, Horizontal	$504
1	**SHV**	Hutch Organizer, Vertical	$504

ST3 **TOTAL: $9582**

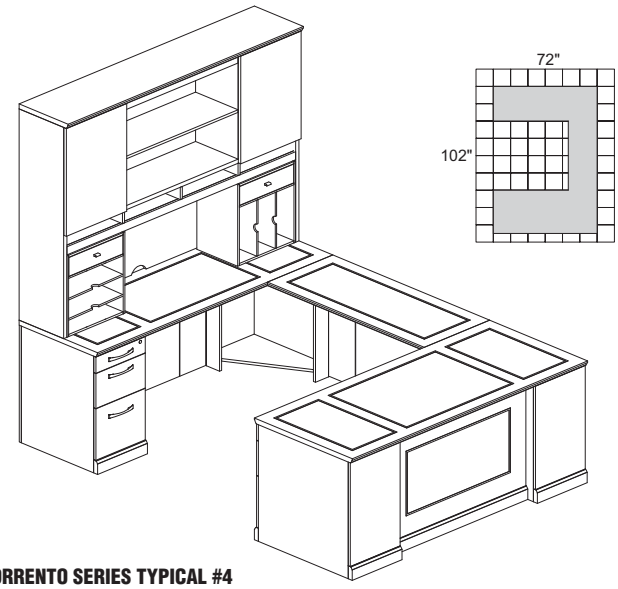

SORRENTO SERIES TYPICAL #4

Consists of:

QTY.	MODEL NO.	DESCRIPTION	LIST PRICE EACH
1	**SULSBB72**	Executive "U," Straight Front, Left Bridge PBF-Desk, PBF-Credenza	$5986
1	**SHA72**	72" Hutch with Double-Height Doors	$2588
1	**SHH**	Hutch Organizer, Horizontal	$504
1	**SHV**	Hutch Organizer, Vertical	$504

ST4 **TOTAL: $9582**

SORRENTO VENEER SERIES TYPICALS

- Order complete suites using "ST__" models.

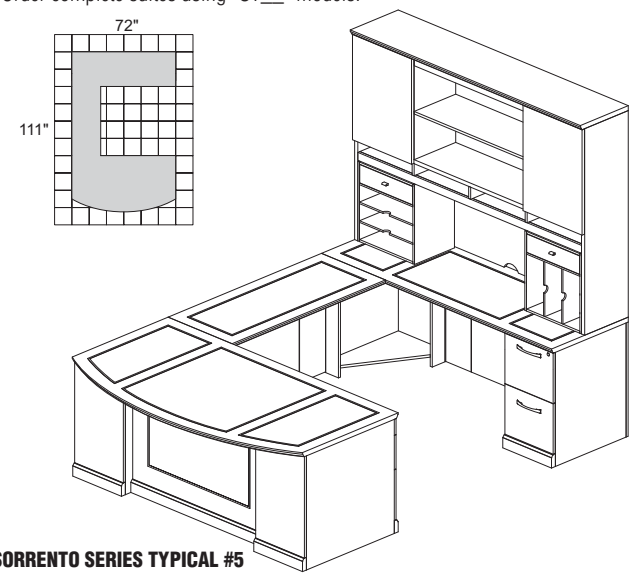

SORRENTO SERIES TYPICAL #5

Consists of:

QTY.	MODEL NO.	DESCRIPTION	LIST PRICE EACH
1	**SURBBF72**	Executive "U," Bowfront, Right Bridge PBF-Desk, FF-Credenza	$6099
1	**SHA72**	72" Hutch with Double-Height Doors	$2588
1	**SHH**	Hutch Organizer, Horizontal	$504
1	**SHV**	Hutch Organizer, Vertical	$504

ST5 **TOTAL: $9695**

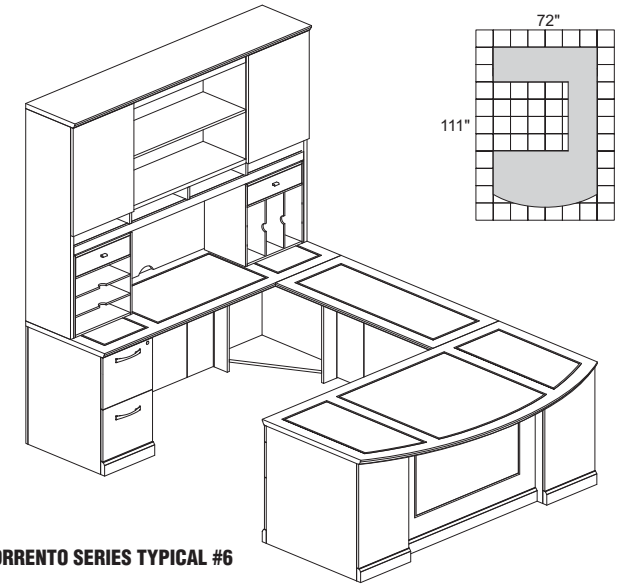

SORRENTO SERIES TYPICAL #6

Consists of:

QTY.	MODEL NO.	DESCRIPTION	LIST PRICE EACH
1	**SULBBF72**	Executive "U," Bowfront, Left Bridge PBF-Desk, FF-Credenza	$6099
1	**SHA72**	72" Hutch with Double-Height Doors	$2588
1	**SHH**	Hutch Organizer, Horizontal	$504
1	**SHV**	Hutch Organizer, Vertical	$504

ST6 **TOTAL: $9695**

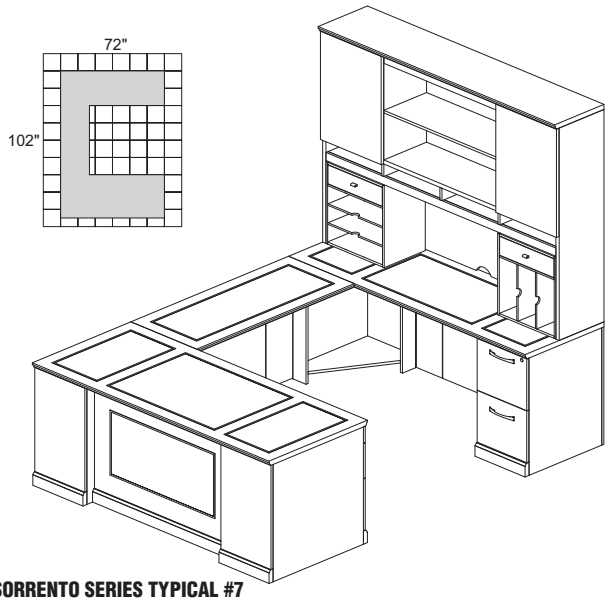

SORRENTO SERIES TYPICAL #7

Consists of:

QTY.	MODEL NO.	DESCRIPTION	LIST PRICE EACH
1	**SURSBF72**	Executive "U," Straight Front, Right Bridge PBF-Desk, FF-Credenza	$5903
1	**SHA72**	72" Hutch with Double-Height Doors	$2588
1	**SHH**	Hutch Organizer, Horizontal	$504
1	**SHV**	Hutch Organizer, Vertical	$504

ST7 **TOTAL: $9499**

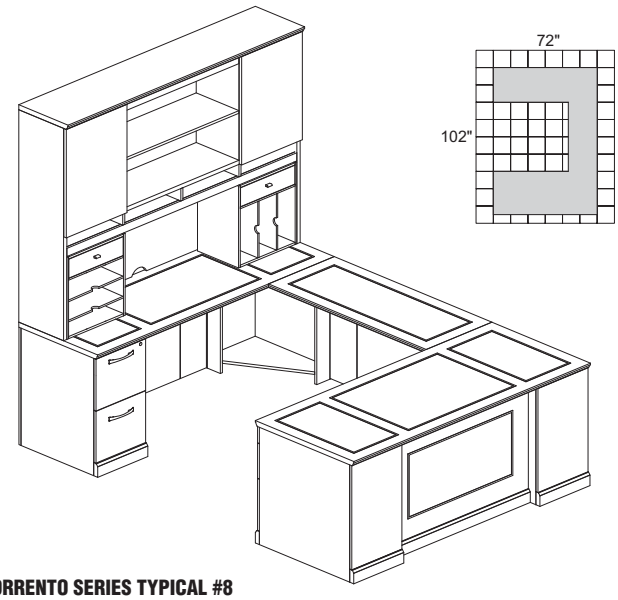

SORRENTO SERIES TYPICAL #8

Consists of:

QTY.	MODEL NO.	DESCRIPTION	LIST PRICE EACH
1	**SULSBF72**	Executive "U," Straight Front, Left Bridge PBF-Desk, FF-Credenza	$5903
1	**SHA72**	72" Hutch with Double-Height Doors	$2588
1	**SHH**	Hutch Organizer, Horizontal	$504
1	**SHV**	Hutch Organizer, Vertical	$504

ST8 **TOTAL: $9499**

SORRENTO VENEER SERIES TYPICALS

- Order complete suites using "ST__" models.

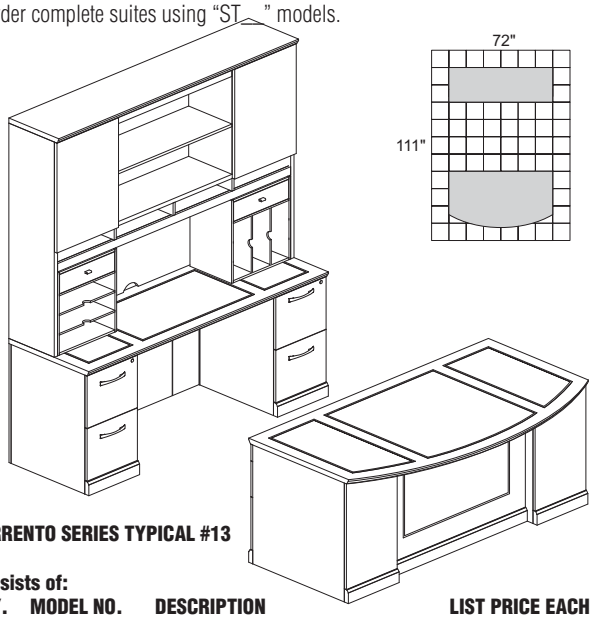

SORRENTO SERIES TYPICAL #13

Consists of:

QTY.	MODEL NO.	DESCRIPTION	LIST PRICE EACH
1	**SDBBB72**	Double Pedestal Desk, Bowfront (2) PBF-Desk	$3707
1	**SCFF72**	Double Pedestal Credenza (2) FF-Credenza	$2994
1	**SHA72**	72" Hutch with Double-Height Doors	$2588
1	**SHH**	Hutch Organizer, Horizontal	$504
1	**SHV**	Hutch Organizer, Vertical	$504

ST13 **TOTAL: $10297**

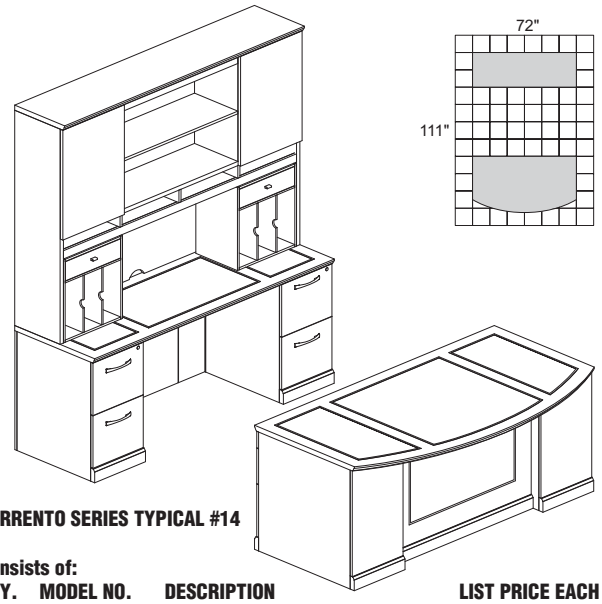

SORRENTO SERIES TYPICAL #14

Consists of:

QTY.	MODEL NO.	DESCRIPTION	LIST PRICE EACH
1	**SDBBB72**	Double Pedestal Desk, Bowfront (2) PBF-Desk	$3707
1	**SCFF72**	Double Pedestal Credenza (2) FF-Credenza	$2994
1	**SHA72**	72" Hutch with Double-Height Doors	$2588
2	**SHV**	Hutch Organizer, Vertical	$504

ST14 **TOTAL: $10297**

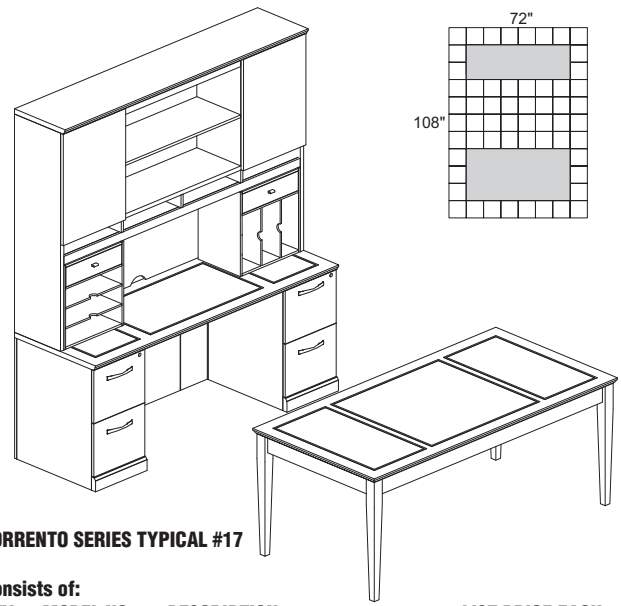

SORRENTO SERIES TYPICAL #17

Consists of:

QTY.	MODEL NO.	DESCRIPTION	LIST PRICE EACH
1	**STD72**	72" Table Desk	$1735
1	**SCFF72**	Double Pedestal Credenza (2) FF-Credenza	$2994
1	**SHA72**	72" Hutch with Double-Height Doors	$2588
1	**SHH**	Hutch Organizer, Horizontal	$504
1	**SHV**	Hutch Organizer, Vertical	$504

ST17 **TOTAL: $8325**

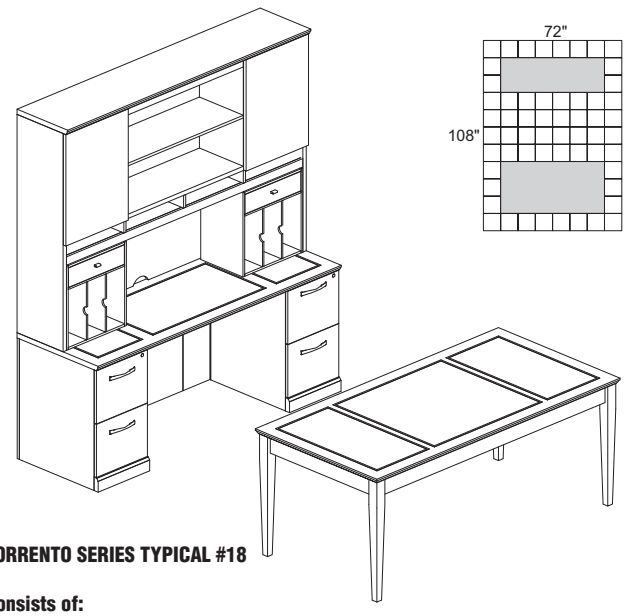

SORRENTO SERIES TYPICAL #18

Consists of:

QTY.	MODEL NO.	DESCRIPTION	LIST PRICE EACH
1	**STD72**	72" Table Desk	$1735
1	**SCFF72**	Double Pedestal Credenza (2) FF-Credenza	$2994
1	**SHA72**	72" Hutch with Double-Height Doors	$2588
1	**SHV**	Hutch Organizer, Vertical	$504
1	**SHV**	Hutch Organizer, Vertical	$504

ST18 **TOTAL: $8325**

SORRENTO VENEER SERIES TYPICALS

- Order complete suites using "ST__" models.

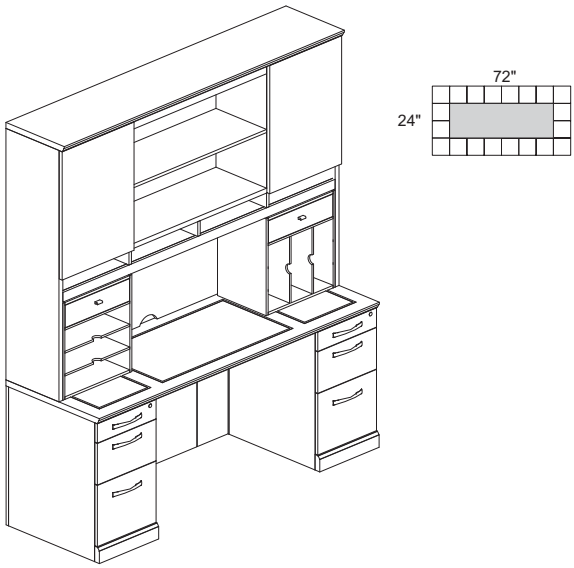

SORRENTO SERIES TYPICAL #21

Consists of:

QTY.	MODEL NO.	DESCRIPTION	LIST PRICE EACH
1	**SCBB72**	Double Pedestal Credenza (2) PBF-Credenza	$3160
1	**SHA72**	72" Hutch with Double-Height Doors	$2588
1	**SHH**	Hutch Organizer, Horizontal	$504
1	**SHV**	Hutch Organizer, Vertical	$504

ST21 **TOTAL: $6756**

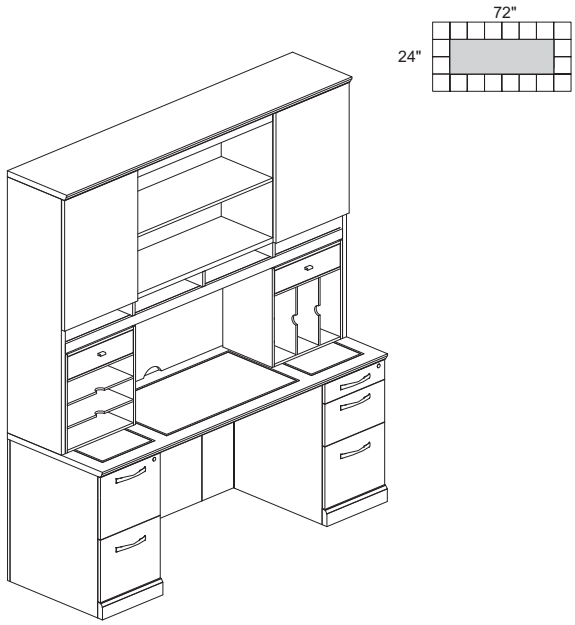

SORRENTO SERIES TYPICAL #23

Consists of:

QTY.	MODEL NO.	DESCRIPTION	LIST PRICE EACH
1	**SCBF72**	Double Pedestal Credenza (1) PBF & (1) FF Credenza	$3077
1	**SHA72**	72" Hutch with Double-Height Doors	$2588
1	**SHH**	Hutch Organizer, Horizontal	$504
1	**SHV**	Hutch Organizer, Vertical	$504

ST23 **TOTAL: $6673**

LUMINARY VENEER SERIES

GIZA/CAP FAST Freight QUICK-SHIP

LUMINARY DESK SERIES

Designed with today's sensible buyer in mind, the Luminary Series Office furniture provides quality and a versatile line of veneer casegoods at an amazing price. Luminary is available in two finishes with AA-grade North American hardwood veneers used throughout.
Surfaces: Cherry finish on Cherry veneer and Maple finish on Maple veneer.

- Desk, returns and credenza work surfaces are 1 1/4" thick with reeded edge.
- Modular and non-handed construction for flexibility and versatility.
- Full peds available in both BBF and FF. Available in 19"and 22" depths.
- Full extension ball bearing suspension provides quiet drawer operation.
- Central locking on all drawers with random or key alike options.
- Veneers are book matched and highlight the natural beauty of the Cherry and Maple grain.
- All floor supported units have adjustable glides for leveling on uneven floors.
- All models in all finishes are available on both the Quick-Ship and Fast Freight delivery programs with no quantity limitations.

BOW FRONT DESK

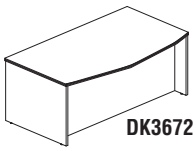
DK3672

- Features bow front surface and end panels with reeded edge.
- Full height modesty panels.

Model No.	Description	Dimensions	Wt.	List Price
DK3672	72" Bow Front Desk	72"W x 42"D x 29"H	188#	$1261

STRAIGHT FRONT DESK

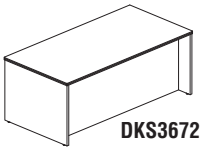
DKS3672

Model No.	Description	Dimensions	Wt.	List Price
DKS3672	72" Straight Front Desk	72"W x 36"D x 29"H	188#	$1250

TABLE DESK

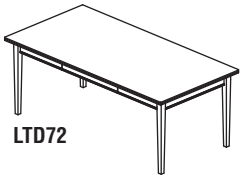
LTD72

- Built in center drawer.
- Drawer front folds down for keyboard accessibility.
- 150 lb weight limit.

Model No.	Description	Dimensions	Wt.	List Price
LTD72	72" Table Desk	72"W x 36"D x 29"H	144#	$1192

PENINSULA DESK

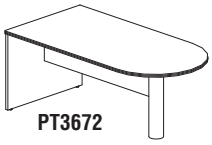
PT3672

- Modesty panel is 14 1/2"H.

Model No.	Description	Dimensions	Wt.	List Price
PT3672	Return / Bridge Supported	72"W x 36"D x 29"H	133#	$1032

LUMINARY VENEER SERIES

BRIDGE

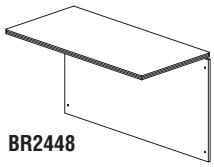
BR2448

- Universal mounting to right or left side of desk.
- Not free standing. Requires connection to desk and credenza.
- Includes full-height modesty panel.

Model No.	Description	Dimensions	Wt.	List Price
BR2448	Bridge (Non-Handed)	48"W x 24"D x 29"H	62#	$398

RETURN

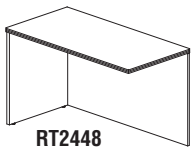
RT2448

- Features end panel with reeded edge.
- Includes full-height modesty panel.

Model No.	Description	Dimensions	Wt.	List Price
RT2436	Return (Non-Handed)	36"W x 24"D x 29"H	62#	$517
RT2448	Return (Non-Handed)	48"W x 24"D x 29"H	78#	$527

CREDENZA

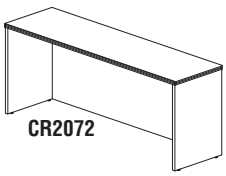
CR2072

- Full-height modesty panel.
- Reeded edge matching desk detailing.

Model No.	Description	Dimensions	Wt.	List Price
CR2072	72" Credenza	72"W x 20"D x 29"H	122#	$701

HINGED DOOR CREDENZA

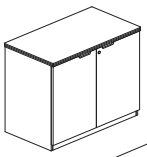
HDC3620

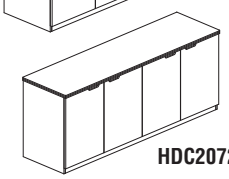
HDC2072

- Interior finished to match exterior veneer.
- Gang-lock (on HDC3620 only) features removable core enabling keyed-alike suites.
- One adjustable shelf.

Model No.	Description	Dimensions	Wt.	List Price
HDC3620	2-Door Hinged Credenza	36"W x 20"D x 29"H	100#	$1065
HDC2072	4-Door Hinged Credenza	72"W x 20"D x 29"H	192#	$1754

LATERAL FILE – 2 DRAWER

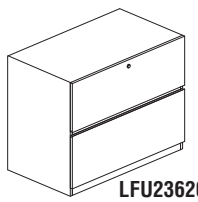
LFU23620

- Unfinished top. Must be installed under credenza. Two files fit under 72" credenza.
- Gang-lock features removable core enabling keyed-alike suites.
- Drawers operate smoothly using full-extension ball-bearing suspensions.
- Includes counter-weight for stability when in use.
- Accommodates letter and legal size hanging file folders.
- Optional top for lateral file available.

Model No.	Description	Dimensions	Wt.	List Price
LFU23620	Lateral File, Unfinished Top	34 5/8"W x 19"D x 27 3/4"H	113#	$1124

LUMINARY VENEER SERIES

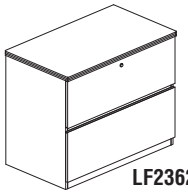

LF23620

- Gang-lock features removable core enabling keyed-alike suites.
- Drawers operate smoothly using full-extension ball-bearing suspensions.
- Includes counter-weight for stability when in use.
- Accommodates letter and legal size hanging file folders.

Model No.	Description	Dimensions	Wt.	List Price
LF23620	Lateral File, Finished Top	34 5/8"W x 20"D x 29"H	131#	$1162

PEDESTAL FILES FOR CREDENZA / RETURN

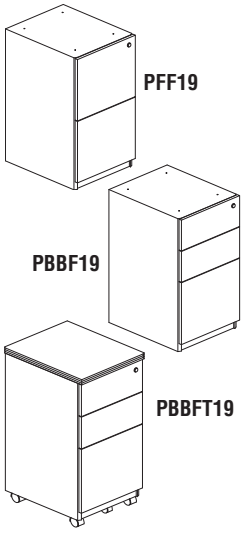

PFF19

PBBF19

PBBFT19

- Drawer interiors are finished to match exterior veneer.
- Drawers operate smoothly using full-extension ball-bearing suspensions. Gang-lock features removable core.
- Choice of two styles featuring two file drawers or two box drawers and one file drawer.
- File drawers accommodate letter or legal size hanging file folders.

Model No.	Description	Dimensions	Wt.	List Price
PFF19	File/File for Credenza/Return	15"W x 19"D x 27 3/4"H	67#	$598
PBBF19	Box/Box/File for Credenza/Return	15"W x 19"D x 27 3/4"H	70#	$598
PBBFT19	Box/Box/File w/Casters & Finished Top	15"W x 19"D x 29"H	80#	$711

PEDESTAL FILES FOR DESK – 30"

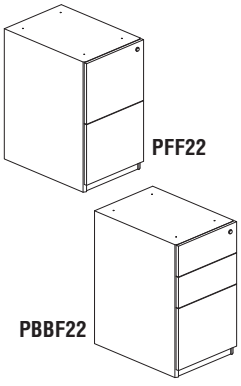

PFF22

PBBF22

- Drawer interiors are finished to match exterior veneer.
- Drawers operate smoothly using full-extension ball-bearing suspensions. Gang-lock features removable core.
- Choice of two styles featuring two file drawers or two box drawers and one file drawer.
- File drawers accommodate letter or legal size hanging file folders.
- Designed for use under 30" desk or return.

Model No.	Description	Dimensions	Wt.	List Price
PFF22	File/File for 30" Desk	15"W x 22"D x 27 3/4"H	75#	$652
PBBF22	Box/Box/File for 30" Desk	15"W x 22"D x 27 3/4"H	78#	$652

LUMINARY VENEER SERIES

HUTCHES

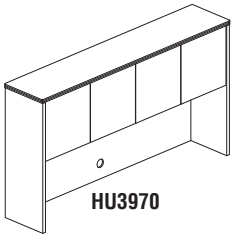
HU3970

- Features four cabinet styled doors with self-closing hinges.
- Back panel features lower and upper cable grommets.
- 20 1/2" clearance between work surfaces and storage bin.

Model No.	Description	Dimensions	Wt.	List Price
HU3970	70" Hutch	70"W x 14"D x 39"H	142#	$931

BOOKCASES

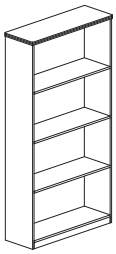
BC3668

- Open shelves for convenient storage.
- Adjustable shelves.
- Choice of two, three or four shelf units.
- All adjustable shelves are 1" thick.

Model No.	Description	Dimensions	Wt.	List Price
BC3629	29"H Bookcase	34 5/8"W x 12"D x 29"H	60#	$555
BC3642*	42"H Bookcase	34 5/8"W x 12"D x 42"H	78#	$692
BC3668	68"H Bookcase	34 5/8"W x 12"D x 68"H	109#	$963

***Note:** Limited quantities available and in Maple only.

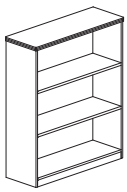
BC3642

BC3629

CONFERENCE TABLES

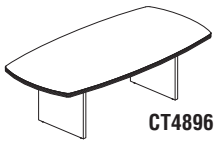
CT4896

- Conference tables are available in 4 sizes.

Model No.	Description	Dimensions	Wt.	List Price
CT3672	Convex Conference Table	72"W x 36"D x 29"H	155#	$1531
CT4896	Convex Conference Table	96"W x 48"D x 29"H	225#	$1947
CT48120	Convex Conference Table	120"W x 48"D x 29"H	305#	$2379
CT48144	Convex Conference Table	144"W x 48"D x 29"H	349#	$2849
RT36	Round Table	36"Round x 29"H	68#	$743
RT42	Round Table	42"Round x 29"H	82#	$775

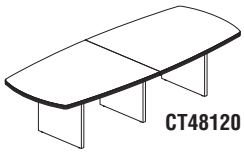
CT48120

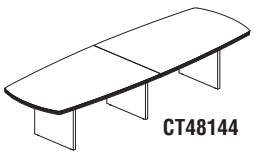
CT48144

RT36

RECEPTION STATION

Surfaces: Cherry finish on Cherry veneer or Maple finish on Maple veneer.

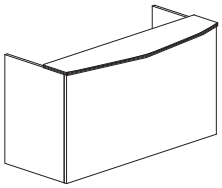

RS7278D

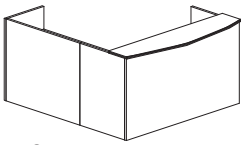

RSRBB

- All Luminary Reception Stations (except RS7278D) include a center drawer.
- Non-handed returns.
- Available in two colors.
- Configured as either a freestanding double-pedestal desk station, or complete with non-handed return.
- Optional glass counter top is available.

Model No.	Description	Dimensions	Wt.	List Price
RS7278D	Reception Station (no peds)	72"W x 36"D x 43 1/4"H	360#	$2824
RRT2448	Reception Station Return	48"W x 24"D x 42"H	145#	$1062
RSBB	Reception Station with 2 - B/B/F	72"W x 36"D x 43 1/4"H	559#	$4231
RSBF	Reception Station with B/B/F, F/F	72"W x 36"D x 43 1/4"H	553#	$4231
RSRBB	Reception Station with return, 2 - B/B/F	72"W x 36"D x 43 1/4"H Desk 48"W x 24"D x 42"H Return	687#	$5293
RSRBF	Reception Station with return, B/B/F, F/F	72"W x 36"D x 43 1/4"H Desk 48"W x 24"D x 42"H Return	684#	$5293
RSTGLASS	Optional Frosted Glass Counter Top	72"W x 18"D x 1/2"H	60#	$536
RTA2436	ADA Reception Return	36"W x 24"D x 29"H	62#	$530

OCCASIONAL TABLES

OT2424

MOT2448

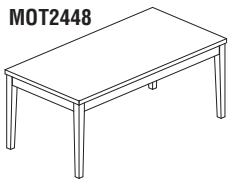

- Table surfaces offered in a choice of Maple finish on Maple Veneer or Cherry finish on Cherry Veneer.

Model No.	Description	Dimensions	Wt.	List Price
OT2424	End Table	24"W x 24"D x 20"H	23#	$594
OT2448	Coffee Table	48"W x 24"D x 16"H	49#	$711

PRESENTATION BOARD

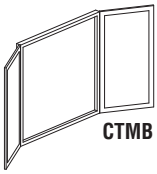

CTMB

- Tackable Black fabric surface on interior side of doors. Eraser and markers not included.
- Magnetic non-ghosting

Model No.	Description	Dimensions	Wt.	List Price
CTMB	Presentation Board	48"W x 3"D x 48"H	82#	$1467

CENTER DRAWER

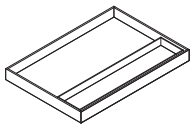

Model No.	Description	Dimensions	Wt.	List Price
CD1*	Center Drawer	23"W x 16"D x 2"H	9#	$103

***Note:** Limited quantities available.

LUMINARY ACCESSORIES

KEYBOARD SUPPORTS

- Track is 16" long.

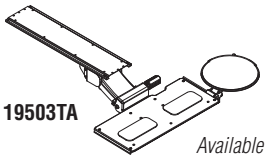

19503TA

Available in Black Only.

Model No.	Description	Wt.	List Price
19503TA	Combination keyboard/mouse platform 19"W x 8 1/4"D, 9"Dia. mouse platform	15#	$570

OPTIONAL HUTCH TASKLIGHT

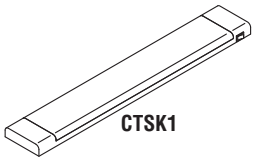

CTSK1

Model No.	Description	Dimensions	Wt.	List Price
CTSK1	Tasklight	25"W x 4"D x 1"H	5#	$144

FABRIC TACK BOARD

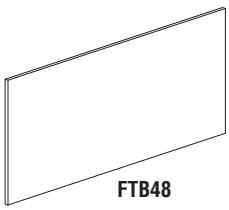

FTB48

- Stocked in MIR1454 Birch fabric.
- Other fabrics available as a special order; special orders sold in pairs only.

Model No.	Dimensions	Wt.	List Price
FTB36	36"W x 21 1/2"H	6#	$381
FTB48	48"W x 21 1/2"H	8#	$462
FTB68	68"W x 21 1/2"H	12#	$513

HANDLES

- Optional black handles are available. To order black handles, add the letter “B” to the end of the model number.

Model No.	Description	Dimensions	Wt.	List Price
CP3	Brushed Chrome	3"	1#	$18
CP6	Brushed Chrome	6"	1#	$18
WP4	Brushed Chrome	4"	1#	$18

GROMMET

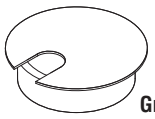

Grommet

Model No.	Description	Dimensions	Wt.	List Price
Grommet	Grommet	2 1/4"Diameter	1#	$6

REPLACEMENT LOCK CORES

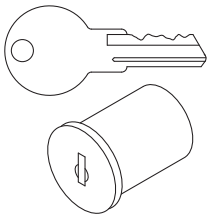

- Allows pedestals and laterals to be keyed uniquely for up to 10 different workstations.
- Master key available.
- Must purchase a core removal tool to change locks cores.

Model No.	Description	Wt.	List Price
REALCC3011 through **REALCC0325 (**Silver)	Replacement core with keys	1#	$21
REALCRK	Core removal tool	1#	$22
REALCMK	Master Key	1#	$21

LUMINARY VENEER SERIES TYPICALS

• Order complete suites using model # shown

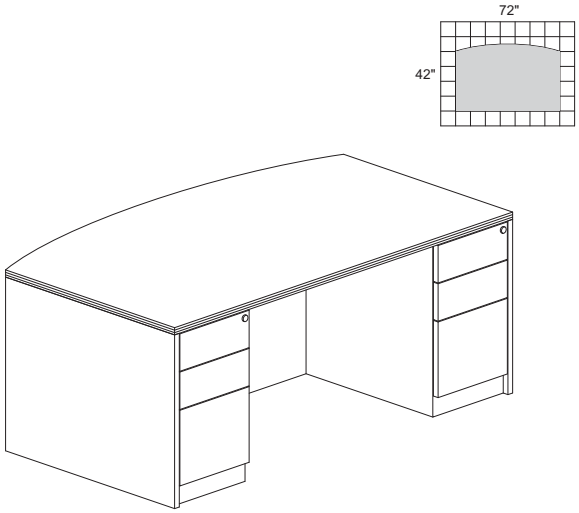

LUMINARY SERIES TYPICAL #4

Consists of:

QTY.	MODEL NO.	DESCRIPTION	LIST PRICE EACH
1	**DK3672**	Desk Shell	$1261
2	**PBBF22**	Pedestal BBF	$652

DBDK3672 **TOTAL: $2565**

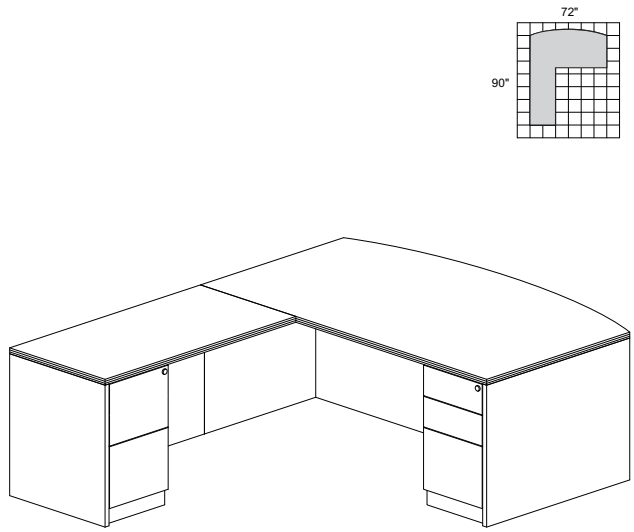

LUMINARY SERIES TYPICAL #5

Consists of:

QTY.	MODEL NO.	DESCRIPTION	LIST PRICE EACH
1	**DK3672**	Desk Shell	$1261
1	**RT2448**	Return	$527
1	**PBBF22**	Pedestal BBF	$652
1	**PFF22**	Pedestal FF	$652

EL5 **TOTAL: $3092**

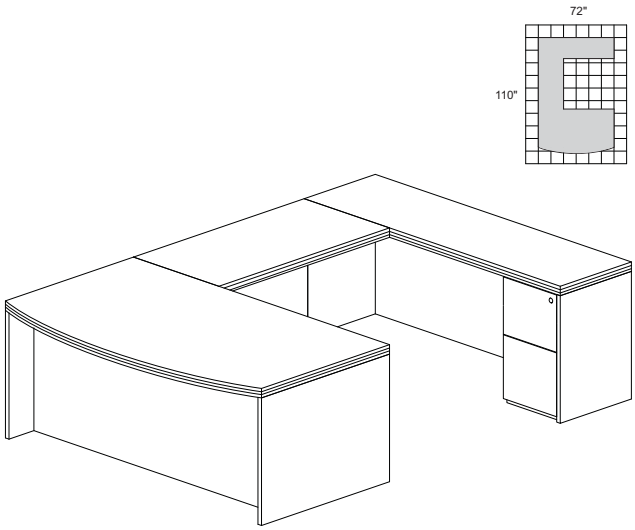

LUMINARY SERIES TYPICAL #7

Consists of:

QTY.	MODEL NO.	DESCRIPTION	LIST PRICE EACH
1	**DK3672**	Desk Shell	$1261
1	**CR2072**	Credenza Shell	$701
1	**BR2448**	Bridge	$398
1	**PBBF22**	Pedestal BBF	$652
1	**PFF19**	Pedestal FF	$598

EU3 **TOTAL: $3610**

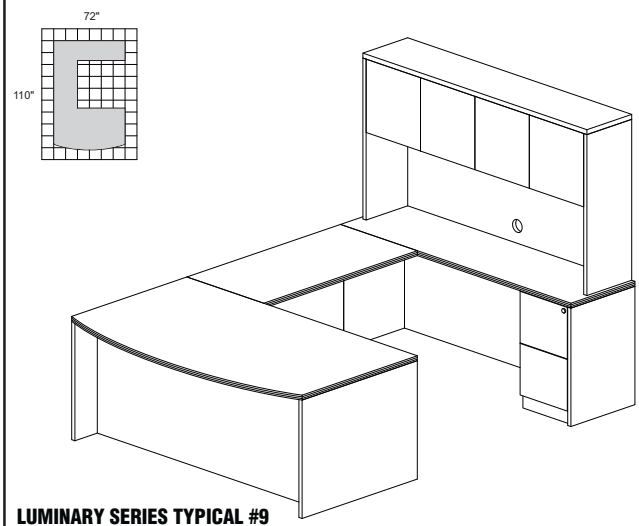

LUMINARY SERIES TYPICAL #9

Consists of:

QTY.	MODEL NO.	DESCRIPTION	LIST PRICE EACH
1	**DK3672**	Desk Shell	$1261
1	**CR2072**	Credenza Shell	$701
1	**HU3970**	Hutch	$931
1	**BR2448**	Bridge	$398
1	**PBBF22**	Pedestal BBF	$652
1	**PFF19**	Pedestal FF	$598

EU1 **TOTAL: $4541**

LUMINARY VENEER SERIES TYPICALS

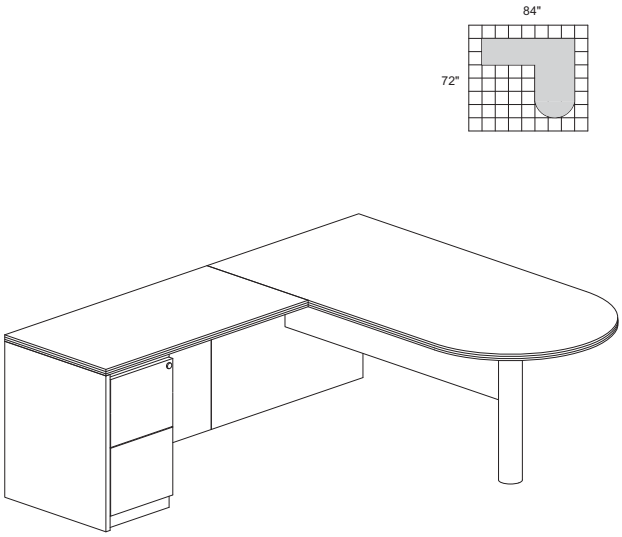

LUMINARY SERIES TYPICAL #11

Consists of:

QTY.	MODEL NO.	DESCRIPTION	LIST PRICE EACH
1	**PT3672**	Peninsula Table	$1032
1	**RT2448**	Return	$527
1	**PFF22**	Pedestal FF	$652

EL6 **TOTAL: $2211**

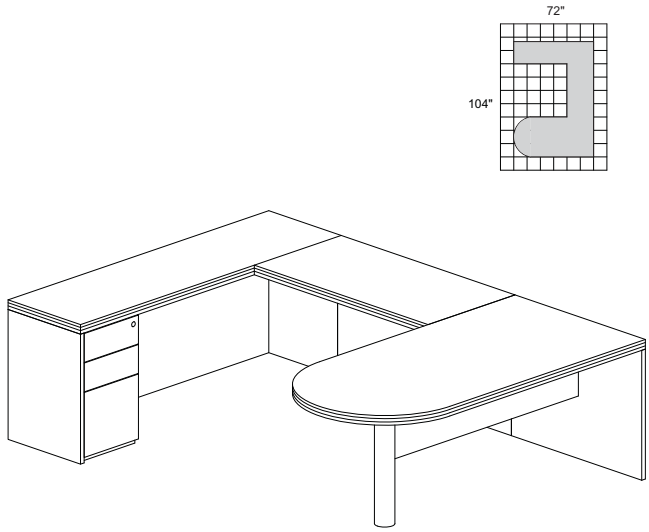

LUMINARY SERIES TYPICAL #14

Consists of:

QTY.	MODEL NO.	DESCRIPTION	LIST PRICE EACH
1	**PT3672**	Peninsula Table	$1032
1	**CR2072**	Credenza Shell	$701
1	**BR2448**	Bridge	$398
1	**PBBF19**	Pedestal BBF	$598

EUB4 **TOTAL: $2729**

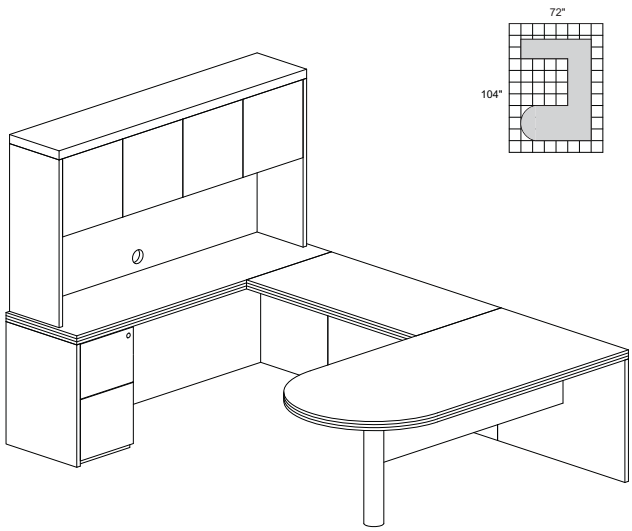

LUMINARY SERIES TYPICAL #15

Consists of:

QTY.	MODEL NO.	DESCRIPTION	LIST PRICE EACH
1	**PT3672**	Peninsula Table	$1032
1	**CR2072**	Credenza Shell	$701
1	**HU3970**	Hutch	$931
1	**BR2448**	Bridge	$398
1	**PFF19**	Pedestal FF	$598

EU2 **TOTAL: $3660**

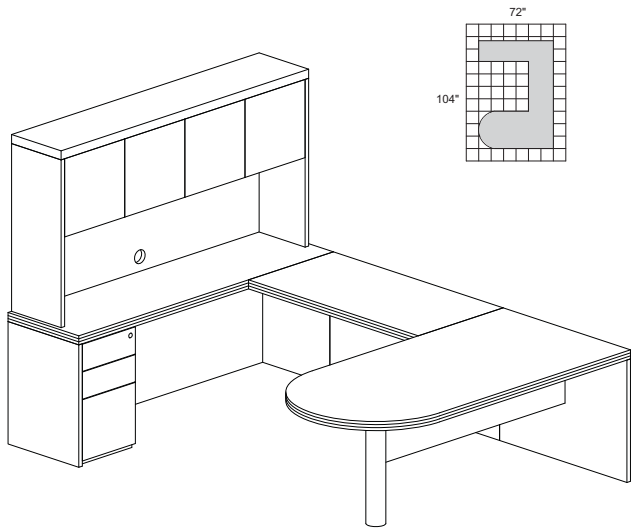

LUMINARY SERIES TYPICAL #16

Consists of:

QTY.	MODEL NO.	DESCRIPTION	LIST PRICE EACH
1	**PT3672**	Peninsula Table	$1032
1	**CR2072**	Credenza Shell	$701
1	**HU3970**	Hutch	$931
1	**BR2448**	Bridge	$398
1	**PBBF19**	Pedestal BBF	$598

EUB2 **TOTAL: $3660**

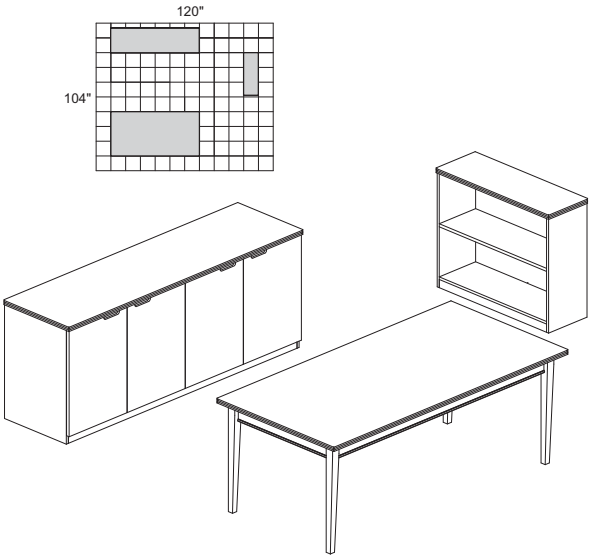

LUMINARY SERIES TYPICAL #34

Consists of:

QTY.	MODEL NO.	DESCRIPTION	LIST PRICE EACH
1	**LTD72**	Table Desk	$1192
1	**HDC2072**	4-Door Hinged Credenza	$1754
1	**BC3629**	Bookcase 2 Shelf	$555

LUM13 **TOTAL: $3501**

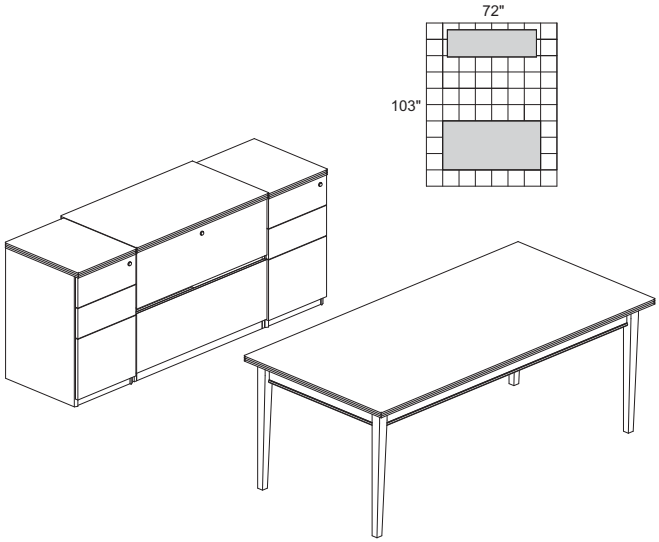

LUMINARY SERIES TYPICAL #35

Consists of:

QTY.	MODEL NO.	DESCRIPTION	LIST PRICE EACH
1	**LTD72**	Table Desk	$1192
2	**PBBFT19**	Pedestal 19 with Top BBF	$711
1	**LF23620**	2-Drawer Lateral File	$1162

LUM14 **TOTAL: $3776**

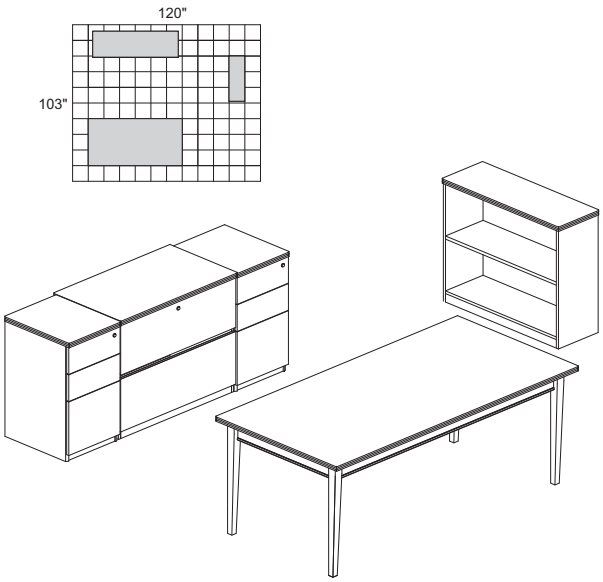

LUMINARY SERIES TYPICAL #36

Consists of:

QTY.	MODEL NO.	DESCRIPTION	LIST PRICE EACH
1	**LTD72**	Table Desk	$1192
2	**PBBFT19**	Pedestal 19 with Top BBF	$711
1	**LF23620**	2-Drawer Lateral File	$1162
1	**BC3629**	Bookcase 2 Shelf	$555

LUM15 **TOTAL: $4331**

MIRA VENEER SERIES

GIZA/CAP FAST Freight QUICK-SHIP

MIRA SERIES

Mira's simple curves create an elegant setting for any work environment. The finest quality workmanship, in-stock availability and affordability make it a very popular series of veneer casegoods.

Surface: Mira is available in a Medium Cherry finish on Cherry veneer or an Espresso finish on Walnut veneer.

- Modular and non-handed construction for flexibility and versatility.
- Full peds available in both BBF and FF. Available in 22" and 28" depths.
- Full extension ball bearing suspension provides quiet drawer operation.
- Central locking on all drawers with random or key alike options.
- Veneers are book matched and highlight the natural beauty of the Cherry grain.
- All floor supported units have adjustable glides for leveling on uneven floors.
- Desk, credenza, return and conference tops are 1 1/2" thick with flat, hardwood edge.
- All models in all finishes are available on both the Quick-Ship and Fast Freight delivery programs with no quantity limitations.

BOW FRONT DESK

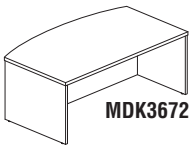

MDK3672

- Features bow front surface.
- Full height modesty panels.

Model No.	Description	Dimensions	Wt.	List Price
MDK3066	66" Bow Front Desk	66"W x 36"D x 29 3/8"H	139#	$1300
MDK3672	72" Bow Front Desk	72"W x 42"D x 29 3/8"H	188#	$1452

STRAIGHT FRONT DESK

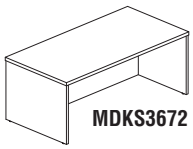

MDKS3672

Model No.	Description	Dimensions	Wt.	List Price
MDKS3066	66" Straight Front Desk	66"W x 30"D x 29 3/8"H	139#	$1285
MDKS3672	72" Straight Front Desk	72"W x 36"D x 29 3/8"H	188#	$1438

PENINSULA DESK

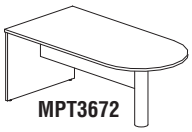

MPT3672

- Modesty panel is 14 1/2"H.
- Free standing.

Model No.	Description	Dimensions	Wt.	List Price
MPT3672	Return / Bridge Supported	72"W x 36"D x 29 3/8"H	133#	$1087

P-SHAPED DESK

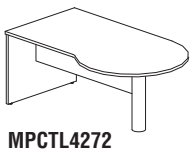

MPCTL4272

- Conferencing side extension either to right or left.
- Modesty panel is 13 3/4"H.
- Free standing.

Model No.	Description	Dimensions	Wt.	List Price
MPCTR4272*	Right P-Shaped Desk	72"W x 36 / 42"D x 29 3/8"H	128#	$1366
MPCTL4272*	Left P-Shaped Desk	72"W x 36 / 42"D x 29 3/8"H	128#	$1366

***Note:** Limited quantities available.

CORNER TABLE

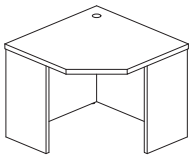

MCU243636

- Full height modesty panel.
- Grommet in top surface standard.
- One grommet located in each leg.

Model No.	Description	Dimensions	Wt.	List Price
MCU243636	Corner Table	36"W x 24"D x 29 3/8"H	131#	$727

MIRA VENEER SERIES

BRIDGE

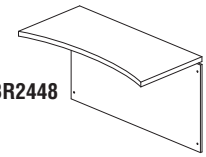

MBR2448

- Universal mounting to right or left side of desk.
- Not free standing. Requires connection to desk and credenza.
- Includes full-height modesty panel.

Model No.	Description	Dimensions	Wt.	List Price
MBR2442	Bridge (Non-Handed)	42"W x 24"D x 29 3/8"H	53#	$434
MBR2448	Bridge (Non-Handed)	48"W x 24"D x 29 3/8"H	62#	$465

RETURN

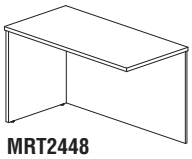

MRT2448

- Features end panel with flat edge.
- Includes full-height modesty panel.

Model No.	Description	Dimensions	Wt.	List Price
MRT2436	Return (Non-Handed)	36"W x 24"D x 29 3/8"H	62#	$552
MRT2448	Return (Non-Handed)	48"W x 24"D x 29 3/8"H	78#	$594

CREDENZA

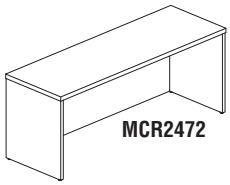

MCR2472

- Full-height modesty panel.
- Flat edge matching desk detailing.

Model No.	Description	Dimensions	Wt.	List Price
MCR2466	66" Credenza	66"W x 24"D x 29 3/8"H	115#	$892
MCR2472	72" Credenza	72"W x 24"D x 29 3/8"H	122#	$911

HINGED DOOR CREDENZA

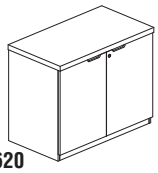

MHDC3620

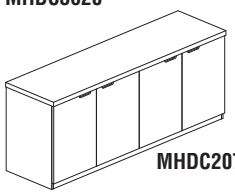

MHDC2072

- Interior finished to match exterior veneer.
- Gang-lock (MHDC3620 only) features removable core enabling keyed-alike suites.
- One adjustable shelf.

Model No.	Description	Dimensions	Wt.	List Price
MHDC3620	36" Hinged Door Credenza	36"W x 20"D x 29 3/8"H	100#	$1142
MHDC2072	72" Hinged Door Credenza	72"W x 20"D x 29 3/8"H	192#	$1961

LATERAL FILE – 2 DRAWER

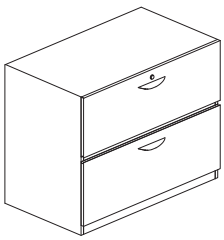

MLFU23624

- Unfinished top. Must be installed under credenza.
- Gang-lock features removable core enabling keyed-alike suites.
- Drawers operate smoothly using full-extension ball-bearing suspensions.
- Includes counter-weight for stability when in use.
- Accommodates letter and legal size hanging file folders.
- Optional top for lateral file available.

Model No.	Description	Dimensions	Wt.	List Price
MLFU23624	Lateral File, Unfinished Top	34 5/8"W x 22"D x 27 3/4"H	113#	$1302
MLFUT23624	Optional Top		24#	$278

MIRA VENEER SERIES

FREESTANDING LATERAL FILE – 2 DRAWER

MLF23624

- Gang-lock features removable core enabling keyed-alike suites.
- Drawers operate smoothly using full-extension ball-bearing suspensions.
- Supports wardrobe unit.
- Accommodates letter and legal size hanging file folders.
- Includes counter-weight for stability when in use.

Model No.	Description	Dimensions	Wt.	List Price
MLF23624	Lateral File, Finished Top	34 5/8"W x 24"D x 29 3/8"H	131#	$1397

MULTI-PURPOSE STORAGE UNIT

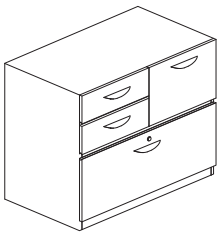

MMPSU1930

- Unfinished top. Must be installed under credenza.
- Includes counter-weight for stability when in use.
- Bottom level features full size layered file drawer.
- Gang-lock features removable core enabling keyed-alike suites.
- Drawers operate smoothly using full-extension ball-bearing suspensions.
- Drawer interiors finished to match exterior veneer.
- Accommodates letter and legal size hanging file folders.
- Optional top for lateral file available.

Model No.	Description	Dimensions	Wt.	List Price
MMPSU1930*	Multi-Purpose Unit, Unfinished Top	30"W x 19"D x 27 3/4"H	128#	$1579
MMPSUT1930*	Optional Top		22#	$225

***Note:** Limited quantities available.

PEDESTAL FILES FOR CREDENZA / RETURN AND 30"D DESKS

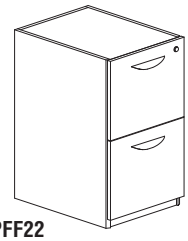

MPFF22

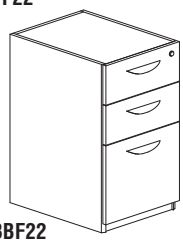

MPBBF22

- Drawer interiors are finished to match exterior veneer.
- Drawers operate smoothly using full-extension ball-bearing suspensions. Gang-lock features removable core.
- Choice of two styles featuring two file drawers or two box drawers and one file drawer.
- File drawers accommodate letter or legal size hanging file folders.

Model No.	Description	Dimensions	Wt.	List Price
MPFF22	File/File Pedestal for Credenza/Return	15"W x 22"D x 27 3/4"H	75#	$699
MPBBF22	Box/Box/File Pedestal for Credenza/Return	15"W x 22"D x 27 3/4"H	78#	$699

PEDESTAL FILES FOR DESK – 36"

MPFF28

MPBBF28

- Drawer interiors are finished to match exterior veneer.
- Drawers operate smoothly using full-extension ball-bearing suspensions. Gang-lock features removable core.
- Choice of two styles featuring two file drawers or two box drawers and one file drawer.
- File drawers accommodate letter or legal size hanging file folders.
- Designed for use under 36" desk.

Model No.	Description	Dimensions	Wt.	List Price
MPFF28	File/File Pedestal for 36" Desk	15"W x 28"D x 27 3/4"H	89#	$794
MPBBF28	Box/Box/File Pedestal for 36" Desk	15"W x 28"D x 27 3/4"H	95#	$794

MIRA VENEER SERIES

HUTCHES

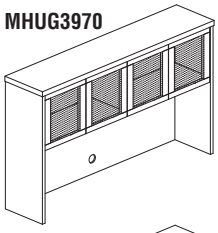
MHUG3970

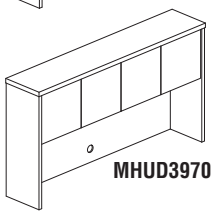
MHUD3970

- Features four cabinet styled doors with self-closing hinges.
- 20 1/2" clearance between work surfaces and storage bin.
- Fully assembled except for doors.
- Back panel features lower and upper cable grommets.
- Optional wood doors available.

Model No.	Description	Dimensions	Wt.	List Price
MHUG3970	70"W Hutch with Glass Doors	70"W x 14"D x 39"H	142#	$1502
MHUD3970	70"W Hutch with Wood Doors	70"W x 14"D x 39"H	142#	$1473

WARDROBE UNIT

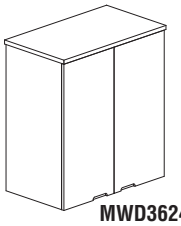
MWD3624

- Mounts on top of Mira Freestanding Lateral File.
- Two adjustable shelves and hanging rod.

Model No.	Description	Dimensions	Wt.	List Price
MWD3624	Wardrobe	34 5/8"W x 24"D x 38"H	168#	$1598

BOOKCASES

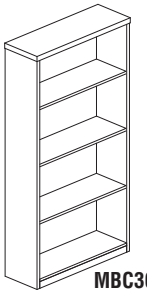
MBC3668

- Open shelves for convenient storage.
- Choice of two, three or four shelf units.
- Adjustable shelves.
- All adjustable shelves are 1" thick.
- 75 lb. capacity per shelf.
- Center shelf is fixed on 68" Shelf Bookcase.

Model No.	Description	Dimensions	Wt.	List Price
MBC3629	29"H Bookcase	34 5/8"W x 12"D x 29"H	60#	$604
MBC3642	42"H Bookcase	34 5/8"W x 12"D x 42"H	78#	$800
MBC3668	68"H Bookcase (1 fixed)	34 5/8"W x 12"D x 68"H	109#	$1128

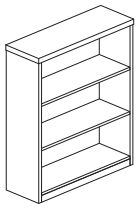
MBC3642

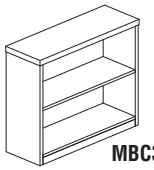
MBC3629

MIRA VENEER SERIES

CONFERENCE TABLES

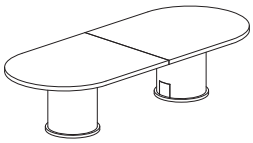
MCTDB48120

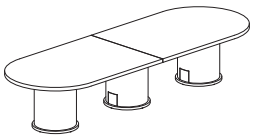
MCTDB48144

- Conference tables are available in 4 sizes.
- Tops and bases shipped separately.

Model No.	Description	Dimensions	Wt.	List Price
MCTDB3672	6' Racetrack Conference Table	72"W x 36"D x 29"H	155#	$1619
MCTDB4896	8' Racetrack Conference Table	96"W x 48"D x 29"H	305#	$2443
MCTDB48120*	10' Racetrack Conference Table	120"W x 48"D x 29"H	320#	$3659
MCTDB48144*	12' Racetrack Conference Table	144"W x 48"D x 29"H	349#	$3783
MRTDB42	Round Conference Table	42"Round x 29"H	117#	$1238
MRTDB48*	Round Conference Table	48"Round x 29"H	124#	$1525

***Note:** Limited quantities available.

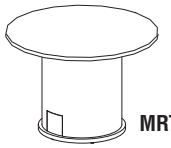
MRTDB42

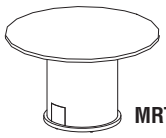
MRTDB48

RECEPTION STATION

Surfaces: Medium Cherry finish on Cherry veneer, or Espresso finish on Walnut veneer.

- All Mira Reception Stations (except MRS7278D) include a center drawer.
- Non-handed returns.
- Configured as either a freestanding double-pedestal desk station, or complete with non-handed return.
- Optional glass counter top is available.

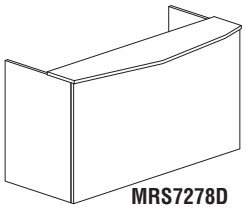
MRS7278D

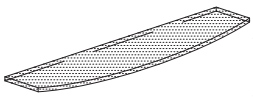
MRSTGLASS

Model No.	Description	Dimensions	Wt.	List Price
MRS7278D	Reception Station (no peds)	72"W x 36"D x 43 1/2"H	360#	$3205
MRSBB	Reception Station with 2 - B/B/F	72"W x 36"D x 43 1/2"H	559#	$4898
MRSBF	Reception Station with B/B/F, F/F	72"W x 36"D x 43 1/2"H	557#	$4898
MRSRBB	Reception Station with return, 2 - B/B/F	72"W x 36"D x 43 1/2"H Desk 48"W x 24"D x 42"H Return	687#	$5875
MRSRBF	Reception Station with return, B/B/F, F/F	72"W x 36"D x 43 1/2"H Desk 48"W x 24"D x 42"H Return	684#	$5875
MRSTGLASS	Optional Frosted Glass Counter Top	72"W x 18"D x 1/2"H	60#	$542
MRTA2436	ADA Reception Return	36"W x 24"D x 29 3/8"H	68#	$565

RECEPTION STATION RETURN

MRRT2448

- Available in Medium Cherry finish on Cherry Veneer, or Espresso finish on Walnut veneer.

Model No.	Description	Dimensions	Wt.	List Price
MRRT2448	Return (Non-Handed)	48"W x 24"D x 42"H	145#	$1072

OCCASIONAL TABLES

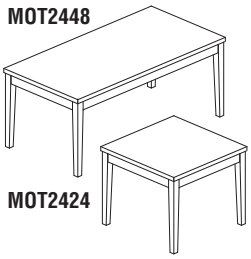
MOT2448
MOT2424

- Table surfaces offered in Medium Cherry finish on Cherry Veneer, or Espresso finish on Walnut veneer.

Model No.	Description	Dimensions	Wt.	List Price
MOT2448*	Coffee Table	48"W x 24"D x 16"H	49#	$762
MOT2424*	End Table	24"W x 24"D x 20"H	23#	$636

***Note:** Limited quantities available in Espresso only.

LETTER TRAY

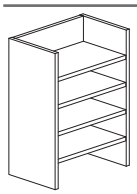
MLT

- Optional hutch letter trays are sized to fit into space between doors and work surface.

Model No.	Description	Dimensions	Wt.	List Price
MLT	Letter Tray	17"W x 10"D x 22"H	25#	$345

MIRA ACCESSORIES

PRESENTATION BOARD

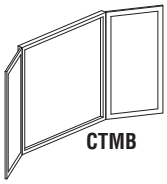
CTMB

- Tackable fabric surface on interior side of doors. Eraser and markers not included.

Model No.	Description	Dimensions	Wt.	List Price
CTMB	Presentation Board	48"W x 3"D x 48"H	82#	$1467

CENTER DRAWER

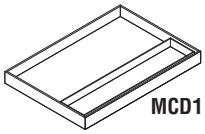
MCD1

Model No.	Description	Dimensions	Wt.	List Price
MCD1*	Center Drawer	23"W x 16"D x 2"H	9#	$105

***Note:** Limited quantities available.

KEYBOARD SUPPORTS

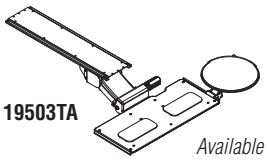
19503TA

Available in Black Only.

Model No.	Description	Wt.	List Price
19503TA	Combination keyboard/mouse platform 19"W x 8 1/4"D, 9"Dia. mouse platform	15#	$570

OPTIONAL HUTCH TASKLIGHT

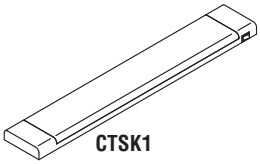
CTSK1

Model No.	Description	Dimensions	Wt.	List Price
CTSK1	Tasklight	25"W x 4"D x 1"H	5#	$144

FABRIC TACK BOARD

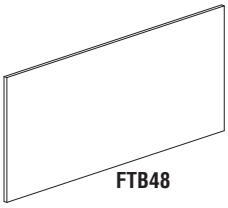
FTB48

- Stocked in MIR1454 Birch fabric.
- Other fabrics available as a special order, special orders sold in pairs only.

Model No.	Dimensions	Wt.	List Price
FTB36	36"W x 21 1/2"H	6#	$381
FTB48	48"W x 21 1/2"H	8#	$462
FTB68	68"W x 21 1/2"H	12#	$513

GROMMET

Grommet

Model No.	Description	Dimensions	Wt.	List Price
Grommet	Grommet	2 1/4"Diameter	1#	$6

REPLACEMENT LOCK CORES

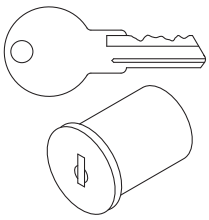

- Allows pedestals and laterals to be keyed uniquely for up to 10 different workstations.
- Master key available.
- Must purchase a core removal tool to change locks cores.

Model No.	Description	Wt.	List Price
REALCC03011 through **REALCC0325** (Silver)	Replacement core with keys	1#	$21
REALCRK	Core removal tool	1#	$22
REALCMK	Master Key	1#	$21

MIRA VENEER SERIES TYPICALS

- **Order complete suites using model # shown**

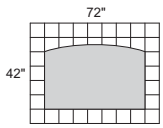

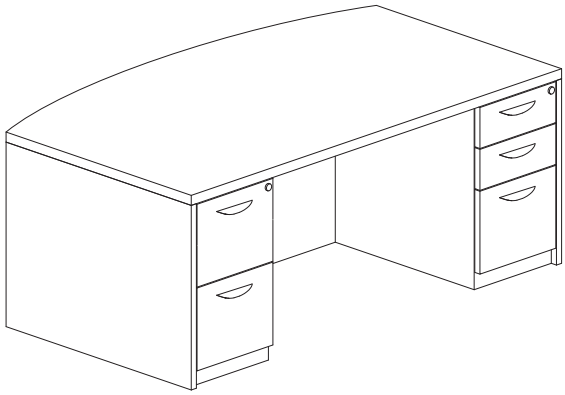

MIRA SERIES TYPICAL #3

Consists of:

QTY.	MODEL NO.	DESCRIPTION	LIST PRICE EACH
1	**MDK3672**	Desk Shell	$1452
1	**MPBBF28**	Pedestal BBF	$794
1	**MPFF28**	Pedestal FF	$794

MDPDK3672 **TOTAL: $3040**

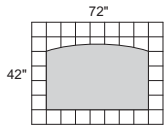

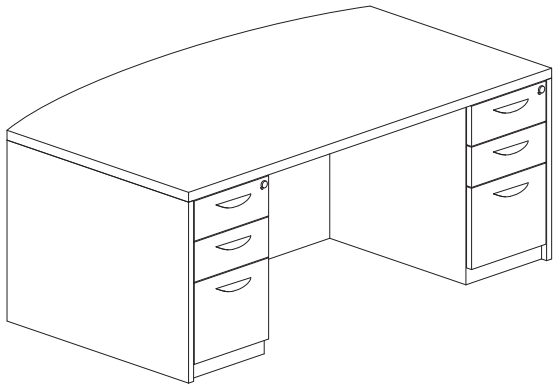

MIRA SERIES TYPICAL #4

Consists of:

QTY.	MODEL NO.	DESCRIPTION	LIST PRICE EACH
1	**MDK3672**	Desk Shell	$1452
1	**MPBBF28**	Pedestal BBF	$794
1	**MPBBF28**	Pedestal BBF	$794

MDBDK3672 **TOTAL: $3040**

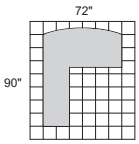

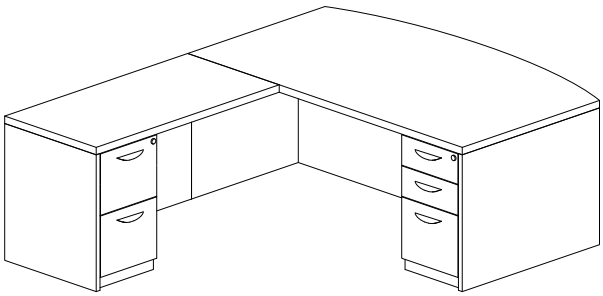

MIRA SERIES TYPICAL #5

Consists of:

QTY.	MODEL NO.	DESCRIPTION	LIST PRICE EACH
1	**MDK3672**	Desk Shell	$1452
1	**MRT2448**	Return	$594
1	**MPBBF28**	Pedestal BBF	$794
1	**MPFF22**	Pedestal FF	$699

MEL5 **TOTAL: $3539**

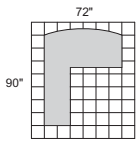

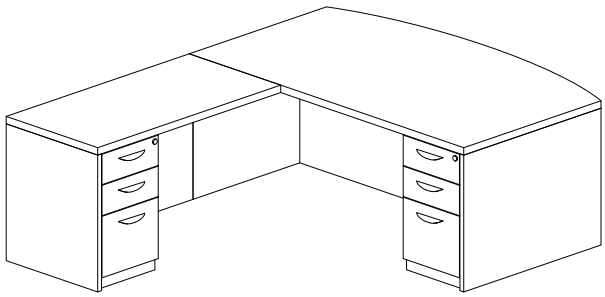

MIRA SERIES TYPICAL #6

Consists of:

QTY.	MODEL NO.	DESCRIPTION	LIST PRICE EACH
1	**MDK3672**	Desk Shell	$1452
1	**MRT2448**	Return	$594
1	**MPBBF28**	Pedestal BBF	$794
1	**MPBBF22**	Pedestal BBF	$699

MELB5 **TOTAL: $3539**

MIRA VENEER SERIES TYPICALS

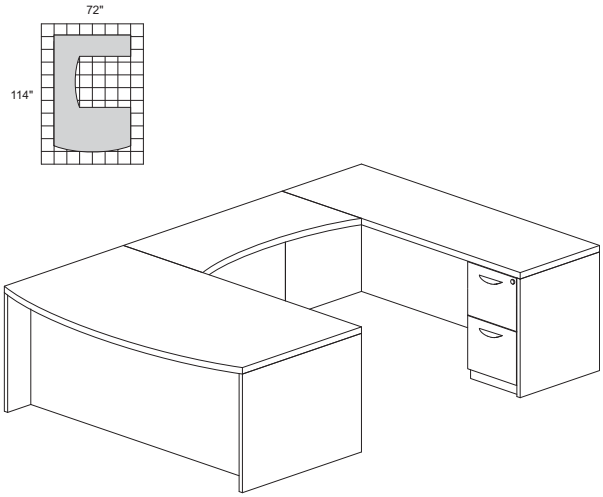

MIRA SERIES TYPICAL #7

Consists of:

QTY.	MODEL NO.	DESCRIPTION	LIST PRICE EACH
1	**MDK3672**	Desk Shell	$1452
1	**MCR2472**	Credenza Shell	$911
1	**MBR2448**	Bridge	$465
1	**MPBBF28**	Pedestal BBF	$794
1	**MPFF22**	Pedestal FF	$699

SUITE MEU3 **TOTAL: $4321**

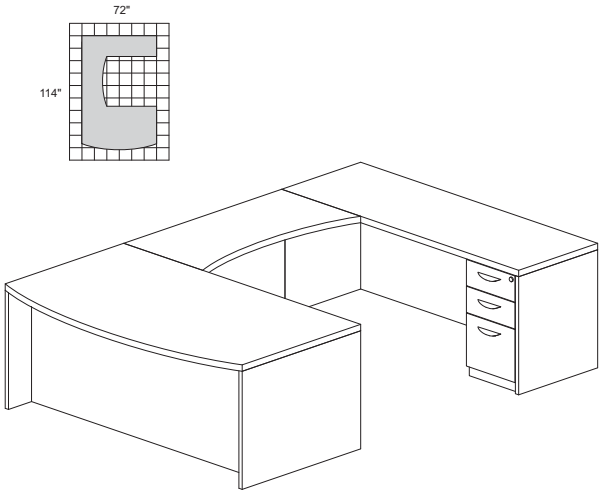

MIRA SERIES TYPICAL #8

Consists of:

QTY.	MODEL NO.	DESCRIPTION	LIST PRICE EACH
1	**MDK3672**	Desk Shell	$1452
1	**MCR2472**	Credenza Shell	$911
1	**MBR2448**	Bridge	$465
1	**MPBBF28**	Pedestal BBF	$794
1	**MPBBF22**	Pedestal BBF	$699

MEUB3 **TOTAL: $4321**

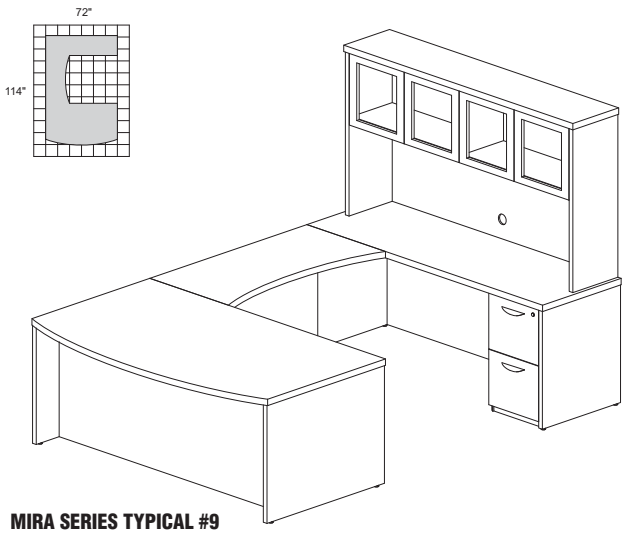

MIRA SERIES TYPICAL #9

Consists of:

QTY.	MODEL NO.	DESCRIPTION	LIST PRICE EACH
1	**MDK3672**	Desk Shell	$1452
1	**MCR2472**	Credenza Shell	$911
1	**MHUG3970**	Hutch	$1502
1	**MBR2448**	Bridge	$465
1	**MPBBF28**	Pedestal BBF	$794
1	**MPFF22**	Pedestal FF	$699

SUITE MEU1 **TOTAL: $5823**

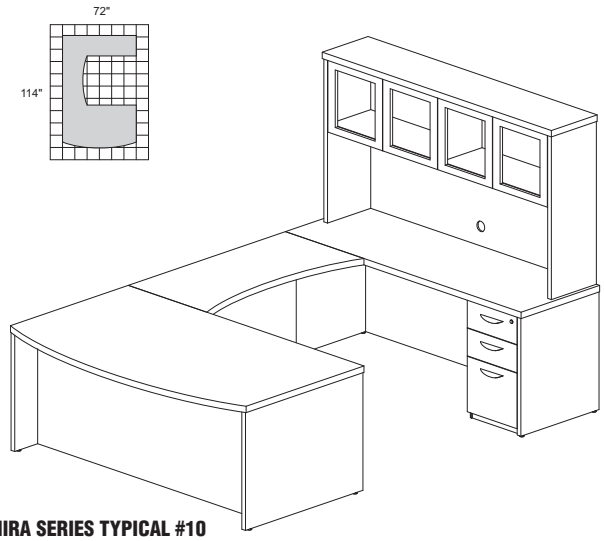

MIRA SERIES TYPICAL #10

Consists of:

QTY.	MODEL NO.	DESCRIPTION	LIST PRICE EACH
1	**MDK3672**	Desk Shell	$1452
1	**MCR2472**	Credenza Shell	$911
1	**MHUG3970**	Hutch	$1502
1	**MBR2448**	Bridge	$465
1	**MPBBF28**	Pedestal BBF	$794
1	**MPBBF22**	Pedestal BBF	$699

MEUB1 **TOTAL: $5823**

MIRA VENEER SERIES TYPICALS

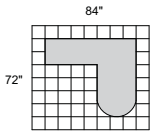

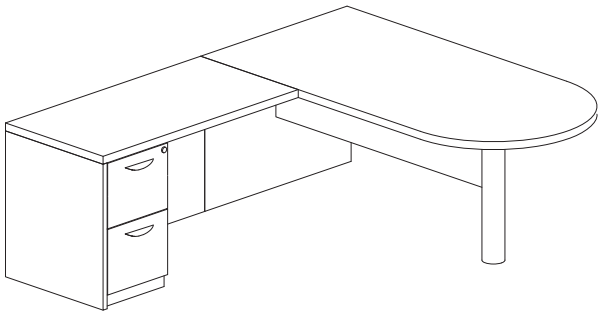

MIRA SERIES TYPICAL #11

Consists of:

QTY.	MODEL NO.	DESCRIPTION	LIST PRICE EACH
1	**MPT3672**	Peninsula Table	$1087
1	**MRT2448**	Return	$594
1	**MPFF22**	Pedestal FF	$699

MEL6 **TOTAL: $2380**

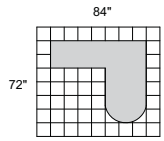

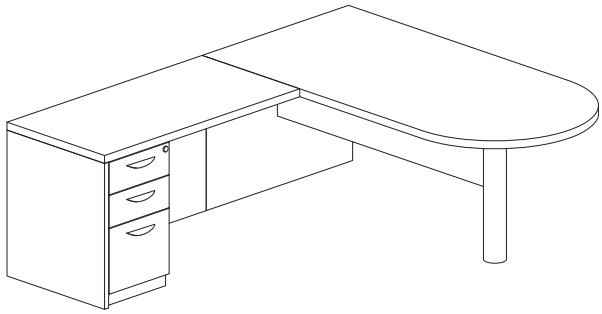

MIRA SERIES TYPICAL #12

Consists of:

QTY.	MODEL NO.	DESCRIPTION	LIST PRICE EACH
1	**MPT3672**	Peninsula Table	$1087
1	**MRT2448**	Return	$594
1	**MPBBF22**	Pedestal BBF	$699

MELB6 **TOTAL: $2380**

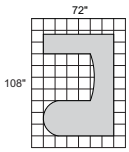

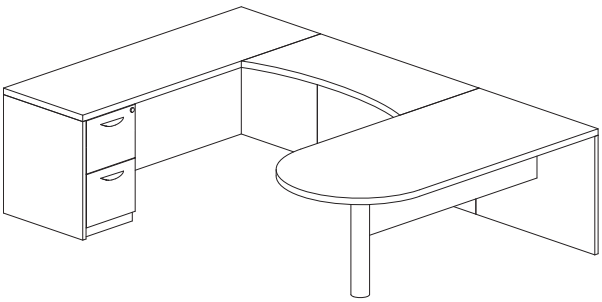

MIRA SERIES TYPICAL #13

Consists of:

QTY.	MODEL NO.	DESCRIPTION	LIST PRICE EACH
1	**MPT3672**	Peninsula Table	$1087
1	**MCR2472**	Credenza Shell	$911
1	**MBR2448**	Bridge	$465
1	**MPFF22**	Pedestal FF	$699

MEU4 **TOTAL: $3162**

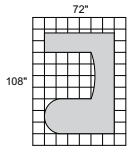

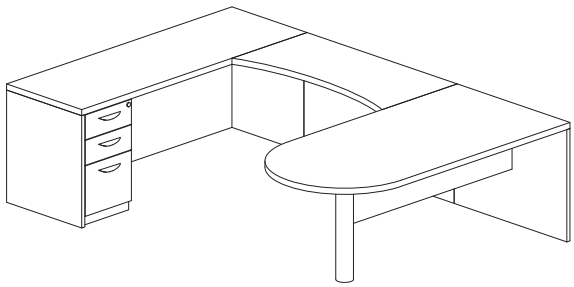

MIRA SERIES TYPICAL #14

Consists of:

QTY.	MODEL NO.	DESCRIPTION	LIST PRICE EACH
1	**MPT3672**	Peninsula Table	$1087
1	**MCR2472**	Credenza Shell	$911
1	**MBR2448**	Bridge	$465
1	**MPBBF22**	Pedestal BBF	$699

MEUB4 **TOTAL: $3162**

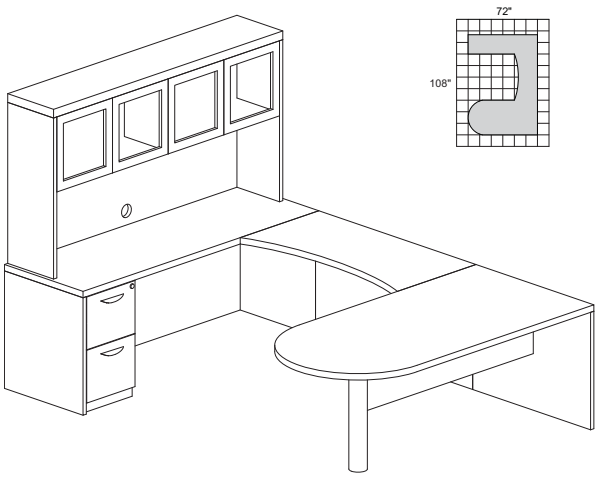

MIRA SERIES TYPICAL #15

Consists of:

QTY.	MODEL NO.	DESCRIPTION	LIST PRICE EACH
1	**MPT3672**	Peninsula Table	$1087
1	**MCR2472**	Credenza Shell	$911
1	**MHUG3970**	Hutch	$1502
1	**MBR2448**	Bridge	$465
1	**MPFF22**	Pedestal FF	$699

MEU2 **TOTAL: $4664**

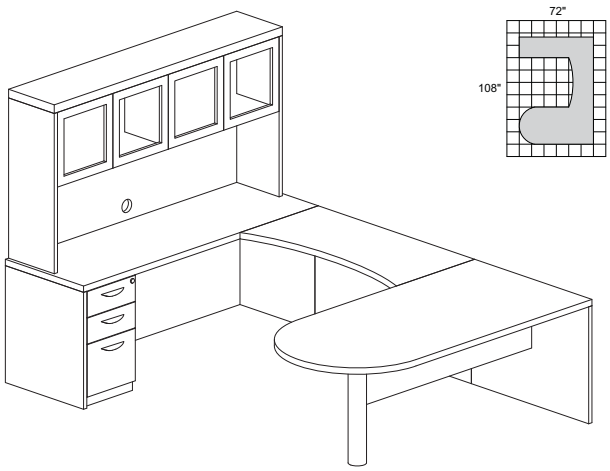

MIRA SERIES TYPICAL #16

Consists of:

QTY.	MODEL NO.	DESCRIPTION	LIST PRICE EACH
1	**MPT3672**	Peninsula Table	$1087
1	**MCR2472**	Credenza Shell	$911
1	**MHUG3970**	Hutch	$1502
1	**MBR2448**	Bridge	$465
1	**MPBBF22**	Pedestal BBF	$699

MEUB2 **TOTAL: $4664**

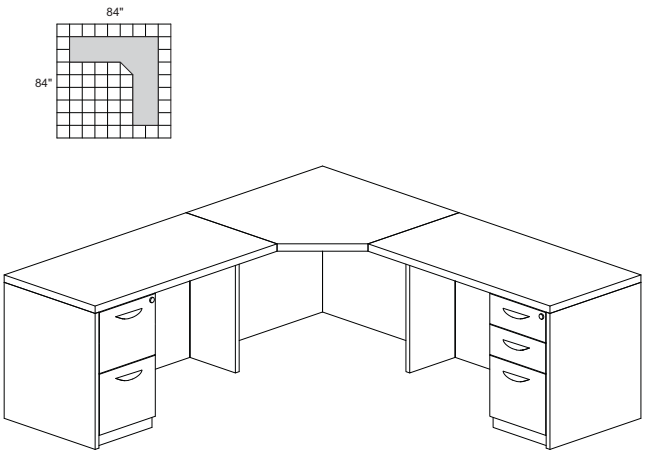

MIRA SERIES TYPICAL #31

Consists of:

QTY.	MODEL NO.	DESCRIPTION	LIST PRICE EACH
1	**MCU243636**	Corner Table	$727
1	**MRT2448**	Return	$594
1	**MRT2448**	Return	$594
1	**MPBBF22**	Pedestal BBF	$699
1	**MPFF22**	Pedestal FF	$699

MCU6 **TOTAL: $3313**

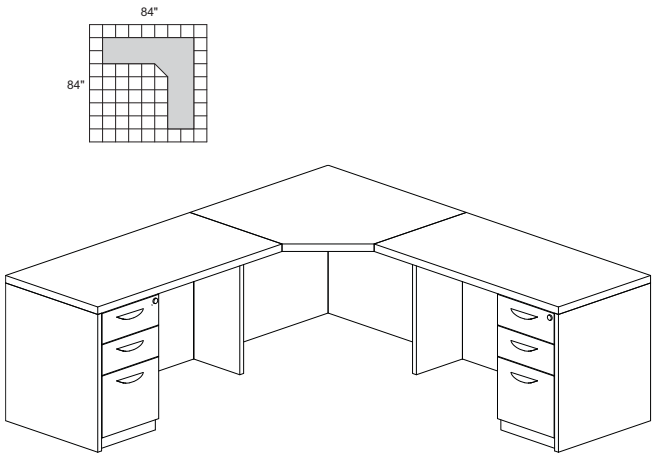

MIRA SERIES TYPICAL #32

Consists of:

QTY.	MODEL NO.	DESCRIPTION	LIST PRICE EACH
1	**MCU243636**	Corner Table	$727
1	**MRT2448**	Return	$594
1	**MRT2448**	Return	$594
1	**MPBBF22**	Pedestal BBF	$699
1	**MPBBF22**	Pedestal BBF	$699

MCUB6 **TOTAL: $3313**

POWER AND DATA OPTIONS

All Power and Data Modules easily field install into desk and conference table tops, providing a combination of power outlets and data jacks.

- Templates for field installation are included with each power module.

Model No.	Description	Dimensions	Wt.	List Price
PMR22	Power and Data Module with 2 Power and 2 Data Outlets (Black)	3"W x 4 1/2"D x 8"H	2#	$194
PMR30	Power Module with 3 Power Outlets (Black)	3"W x 4 1/2"D x 8"H	2#	$204
PM20	Power Module with 2 Power Outlets (Black)	5 3/8"W x 4 1/4"D	2#	$305
PM22	Power and Data Module with 2 Power and 2 Data Outlets (Silver)	8 1/4"W x 4 3/8"D	4#	$464
PM44	Power and Data Module with 4 Power and 4 Data Outlets (Silver)	8"W x 8 1/4"D	5#	$928

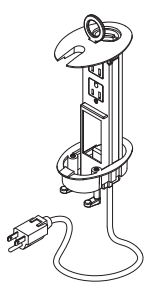
PMR22

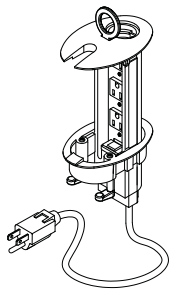
PMR30

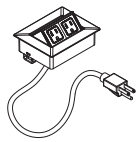
PM20

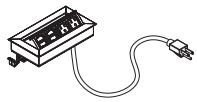
PM22

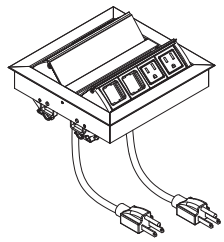
PM44

GROMMET OPTIONS

Mayline's Grommet Options are available in 8 different styles providing you with the perfect solution.

- All grommets are field installed.

Model No.	Description	Dimensions (Face Plate)	Wt.	List Price
F740	Recommended for Desk Tops (Black, Taupe, White, Gray)	2 3/4"W x 2 1/8"D	1#	$24
GMT1	Recommended for Conference Table and Desk Tops (Black Only)	3 1/2"W x 2"D	1#	$26
GMT2	Recommended for Conference Table Tops (Black Only)*	6 1/4"W x 3 1/4"D	1#	$26
REALS099	Recommended for Conference Table Tops (Silver Only)*	6 1/4"W x 3 1/4"D	1#	$24
REALS100	Recommended for Conference Table and Desk Tops (Silver)	2 5/8"D	1#	$24
REALS104	Recommended for Hutch Back Panels (Black)	1 5/8"D	1#	$20
REALS276	Recommended for Hutch Back Panels, Modesty Panels and Peds (Black)	2 5/8"D	1#	$20
REALS277	Recommended for Peds, Desk, Credenza or Return End Panels	2"W x 2"D	1#	$20

* Is not recommended for Corsica Conference Table Tops

F740

GMT1

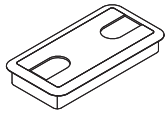
GMT2

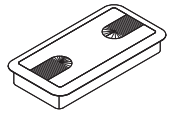
REALS099

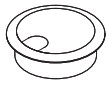
REALS100

REALS104

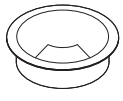
REALS276

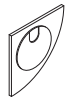
REALS277

HANDLE OPTIONS

HANDLE OPTION FOR DESKS AND STORAGE SERIES

Model No.	Description	Dimensions	Finish	List Price
CP3	Luminary, Mira	4"W, with 1 1/4" Center	Chrome/Black	$18
CP6	Luminary, Mira	6"W, with 3 3/4" Center	Chrome/Black	$18
WP4	Luminary, Mira	4"W, with 3 3/4" Center	Chrome/Black	$18
REALS010	Corsica, Napoli	7"W, with 6 1/4" Center	Satin Nickel	$18
REALS011	Corsica, Napoli	7"W, with 6 1/4" Center	Black	$18
REALS281	Corsica, Napoli	7 1/2"W, with 6 1/4" Center	Black	$18
REALS282	Corsica, Napoli	7 1/2"W, with 6 1/4" Center	Satin Nickel	$18
REALS191	Aberdeen, Brighton, Medina, Sorrento	7"W, with 5" Center	Satin Nickel	$18
REALS283	Aberdeen, Brighton, Medina, Sorrento	7 1/2"W, with 5" Center	Satin Nickel	$20
REALS284	Aberdeen, Brighton, Medina, Sorrento	7 1/2"W, with 5" Center	Black	$20
REALS285	Aberdeen, Brighton, Medina, Sorrento	6 1/2"W, with 5" Center	Satin Nickel	$20
REALS286	Aberdeen, Brighton, Medina, Sorrento	6 1/2"W, with 5" Center	Black	$20
REALS287	Aberdeen, Brighton, Medina, Sorrento	6 1/2"W, with 5" Center	Satin Nickel	$16
REALS288	Aberdeen, Brighton, Medina, Sorrento	6 1/2"W, with 5" Center	Black	$15

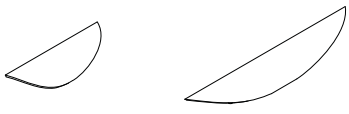
CP3

CP6

WP4

REALS010

REALS011

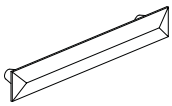
REALS281

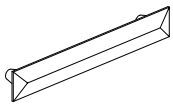
REALS282

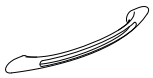
REALS191

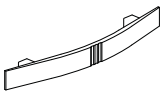
REALS283

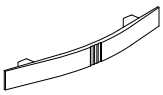
REALS284

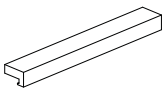
REALS285

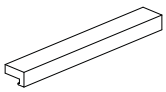
REALS286

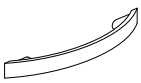
REALS287

REALS288

LOUNGE FURNITURE

GIZA/CAP | FAST Freight | QUICK-SHIP

NOTE: Not on GSA.

- All models in all finishes are available on both the Quick-Ship and Fast Freight delivery programs with no quantity limitations.

PRESTIGE SERIES

- All seated surface areas are genuine leather and available in Black.
- Platforms on Prestige Series are available in Black finish.
- Optional leg kits available.

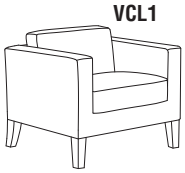
VCL1

Model No.	Description	Outside Dimensions	Seated Area	Seat Ht.	Wt.	List Price
❖ **VCL1**	Chair	33 1/4"W x 29"D x 29 1/4"H	24 1/4"W x 20"D x 12 1/4"H	17"	109#	$1045
❖ **VCL2**	Settee	53 1/2"W x 29"D x 29 1/4"H	44 1/2"W x 20"D x 12 1/4"H	17"	150#	$1671
❖ **VCL3**	Sofa	77 1/2"W x 29"D x 29 1/4"H	68 1/2"W x 20"D x 12 1/4"H	17"	183#	$2177
❖ **VCLL**	Optional Foot Kit for VCL1, VCL2 & VCL3	*See available finishes above.*	2"W x 2 1/4"D x 7 1/2"H		6#	$62

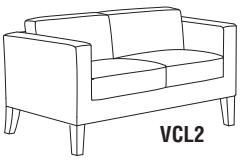
VCL2

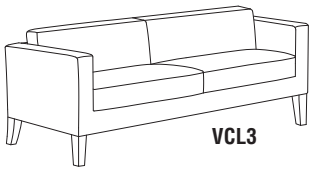
VCL3

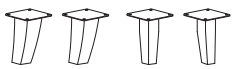
VCLL

SANTA CRUZ LOUNGE SERIES

- Available in Black or Almond leather (both standard with Black feet). Optional foot kit colors available.
- Genuine leather on all seated surfaces.
- Mobile chair includes heavy-duty black double wheel casters in the front, black wood feet in the back.
- Mobile chair available with or without tablet.
- Mobile chair tablet: 360° swivel (15"W x 12"D), tablet height 27", available in Chestnut finish.
- Brushed aluminum handle on mobile chair back for easy mobility.
- Foot kit finish options: Mahogany, Sierra Cherry, Golden Cherry, Espresso, Maple, Bourbon Cherry, Silver or Black for VCC1, VCC2 or VCC3.
- Storage ottoman standard with four casters for easy mobility; Chestnut table inside.
- CA117 approved.

VCCMT

VCC

Model No.	Description	Outside Dimensions	Seated Area	Seat Ht.	List Price
❖ **VCCM**	Mobile Lounge Chair	31"W x 33"D x 30 3/4"H	18 1/2"W x 21"D x 11 3/4"H	19"	$1202
❖ **VCCMT**	Mobile Lounge Chair With Tablet	31"W x 33"D x 30 3/4"H	18 1/2"W x 21"D x 11 3/4"H	19"	$1444
❖ **VCC**	Storage Ottoman	17 1/2"W x 17 1/2"D x 18 1/2"H	17 1/2"W x 17 1/2"D x 18 1/2"H	18 1/2"	$480
❖ **VCC1**	Chair	36"W x 34 1/4"D x 32 1/4"H	21 1/2"W x 22"D x 13 1/4"H	19"	$1178
❖ **VCC2**	Settee	55"W x 34 1/4"D x 32 1/4"H	41"W x 22"D x 13 1/4"H	19"	$1757
❖ **VCC3**	Sofa	75 1/4"W x 34 1/8"D x 32 1/4"H	61"W x 22"D x 13 1/4"H	19"	$2283
❖ **VCCL**	Optional Foot Kit for VCC1, VCC2 & VCC3	2"W x 3"D x 3 1/2"H	*See available finishes above.*		$62

VCC1

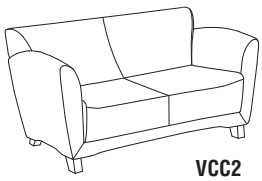
VCC2

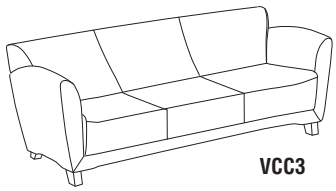
VCC3

VCCL

MERCADO™ WOOD SERIES CHAIRS

QUICK-SHIP

NOTE: Not on GSA.

WOOD GUEST SEATING

Stylish designs of solid wood and genuine leather beautify any private office or reception area.

- Fully assembled wood frame, simple seat attachment required.
- Genuine leather on all seated surfaces.
- Cream leather available on VSC5A and VSC7A models only.
- VSC10A & VSC11A seats ship in separate box.
- Cannot ship small parcel.
- Enhanced seat suspension for lasting comfort.
- Shipped 2 per box (VSC9 & VSC13 shipped 1 per box).
- Supports up to 250 lbs.

FINISH MATRIX

Model No.	Black/ Black	Sierra Cherry/Black	Mahogany /Black	Golden Cherry/Black	Bourbon Cherry/Black	Espresso /Black	Espresso /Cream	Medium Cherry/Black	Maple /Black
VSCA	✔	✔	✔	✔	–	–	–	✔	✔
VSC2A	–	✔	✔	–	–	✔	–	–	–
VSC3A	–	–	–	–	✔	✔	–	✔	✔
VSC5A	✔	✔	✔	–	✔	–	✔	–	–
VSC7A	–	✔	✔	–	–	–	✔	–	–
VSC9	✔	✔	✔	–	–	–	–	–	–
VSC10A	✔	✔	✔	–	–	–	–	–	–
VSC11A	✔	✔	✔	–	–	–	–	–	–
VSC12A	✔	✔	✔	–	–	–	–	–	–
VSC13	✔	✔	✔	–	–	–	–	–	–

Model No.	Outside Dimensions	Seated Area Dimensions	Seat Height	Wt.	Carton List Price	Each List Price
VSCA	22 1/2"W x 23 1/2"D x 33 1/2"H	18 3/4"W x 17 1/4"D x 15"H	18 1/2"	50#	$1248/ctn.	$600/ea.
VSC2A	22 1/4"W x 23 1/2"D x 33 1/2"H	19"W x 19"D x 14 3/4"H	18 3/4"	50#	$1248/ctn.	$600/ea.
VSC3A	22 3/4"W x 24 3/4"D x 34 1/2"H	19"W x 18 3/4"D x 14 1/2"H	20"	48#	$1248/ctn.	$600/ea.
VSC5A	22 3/4"W x 23 3/4"D x 33"H	19 1/4"W x 18"D x 13 1/2"H	19 1/2"	48#	$1248/ctn.	$600/ea.
VSC7A	22 1/2"W x 26"D x 34 3/4"H	19"W x 18 1/2"D x 15 3/4"H	19"	50#	$1248/ctn.	$600/ea.
VSC9	26"W x 23 1/2"D x 34 1/2"H	19"W x 18 1/2"D x 15 1/2"H	19"	41#	$671/ctn.	$645/ea.
VSC10A	24"W x 24 1/2"D x 32 3/4"H	20"W x 20"D x 13 1/4"H	19 1/2"	66#	$1248/ctn.	$600/ea.
VSC11A	23 1/4"W x 22 1/2"D x 32 1/2"H	19 1/4"W x 19 1/2"D x 13 1/2"H	19"	62#	$1248/ctn.	$600/ea.
VSC12A	23"W x 23 1/2"D x 34"H	19 1/2"W x 17 3/4"D x 15"H	19"	62#	$1248/ctn.	$600/ea.
VSC13	26"W x 26"D x 28 1/2"H	20 1/2"W x 19"D x 9"H	19 1/2"	35#	$671/ctn.	$645/ea.

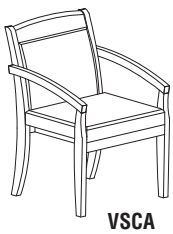
VSCA

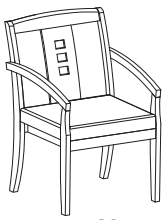
VSC2A

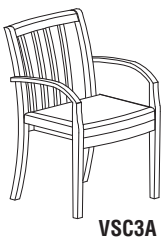
VSC3A

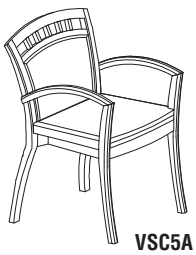
VSC5A

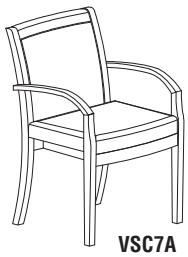
VSC7A

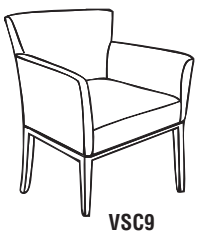
VSC9

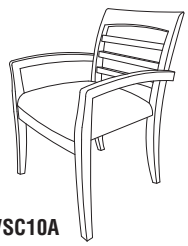
VSC10A

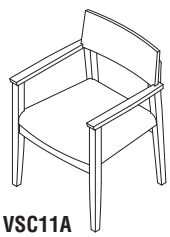
VSC11A

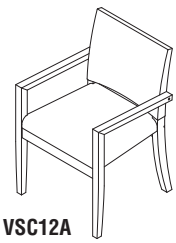
VSC12A

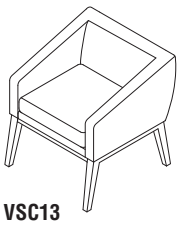
VSC13

OCCASIONAL TABLES

GIZA/CAP | FAST Freight | QUICK-SHIP

- All models in all finishes are available on both the Quick-Ship and Fast Freight delivery programs with no quantity limitations.
- 50 lb weight capacity.

MIDNIGHT SERIES

- Black granite top with Bourbon Cherry finish on base.

Model No.	Description	Dimensions	Wt.	List Price
M103X	Sofa Table	60"W x 16"D x 30"H	99#	$1659
M103C	Coffee Table	48"W x 24"D x 16"H	108#	$1411
M103R	End Table	24"W x 24"D x 22"H	62#	$986

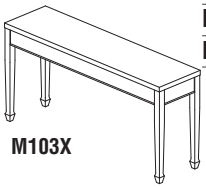
M103X

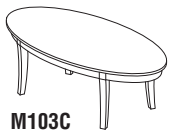
M103C

M103R

DIAMOND SERIES

- Tops feature Cherry veneer with a diamond pattern in a Bourbon Cherry finish.

Model No.	Description	Dimensions	Wt.	List Price
M104C	Coffee Table	48"W x 24"D x 16 1/4"H	62#	$771
M104S	End Table	24"W x 24"D x 22 1/4"H	36#	$554

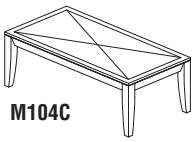
M104C

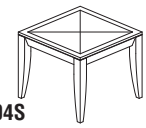
M104S

ILLUSION SERIES

- Glass tops with a Bourbon Cherry finished base.

Model No.	Description	Dimensions	Wt.	List Price
M106C	Coffee Table	48"W x 24"D x 16"H	70#	$1023
M106R	End Table	22"Dia. x 22"H	46#	$704

M106C

M106R

CORSICA TABLES

- Table surfaces are offered in a choice of Sierra Cherry finish on a cherry veneer and Mahogany finish on walnut veneer.

Model No.	Description	Dimensions	Wt.	List Price
CTR	Coffee Table	48"W x 24"D x 16"H	65#	$889
CTS	End Table	24"W x 24"D x 22"H	30#	$629

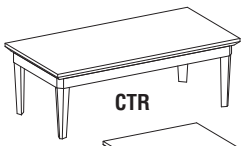
CTR

CTS

NAPOLI TABLES

- Table surfaces are offered in a choice of Sierra Cherry finish on a cherry veneer, Mahogany finish on walnut veneer or Golden Cherry on beech veneer.

Model No.	Description	Dimensions	Wt.	List Price
NTR	Coffee Table	48"W x 24"D x 16"H	40#	$889
NTS	End Table	24"W x 24"D x 22"H	25#	$629

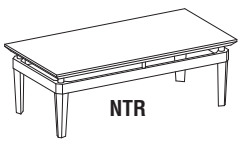
NTR

NTS

OCCASIONAL TABLES

SORRENTO TABLES

- Table surfaces consist of a Bourbon Cherry finish on a Cherry veneer border with a Walnut inlay surrounding Bird's Eye Maple panel or Espresso finish on Walnut veneer.

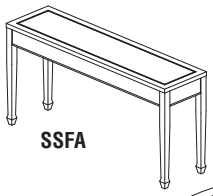
SSFA

Model No.	Description	Dimensions	Wt.	List Price
SSFA	Sofa Table	60"W x 16"D x 30"H	75#	$791
SCFT	Coffee Table – Oval	48"W x 24"D x 15"H	49#	$728
SET	End Table	24"W x 24"D x 24"H	33#	$531

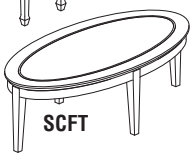
SCFT

SET

LUMINARY TABLES

OT2424

- Table surfaces offered in choice of Maple finish on Maple veneer and Cherry finish on Cherry veneer.

Model No.	Description	Dimensions	Wt.	List Price
OT2424	End Table	24"W x 24"D x 20"H	23#	$594
OT2448	Coffee Table	48"W x 24"D x 16"H	49#	$711

MIRA TABLES

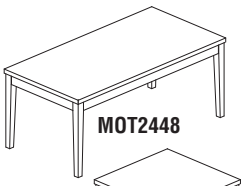
MOT2448

MOT2424

- Table surfaces offered in Medium Cherry surface on Cherry veneer.

Model No.	Description	Dimensions	Wt.	List Price
MOT2448*	Coffee Table	48"W x 24"D x 16"H	49#	$762
MOT2424*	End Table	24"W x 24"D x 20"H	23#	$636

***Note:** Limited quantities available.

TABLES

Cohere™ Tables
Height-Adjustable Tables
Meeting Plus™ Conference & Training Tables
Sync™ Training Tables
Flip-N-Go® Series
T-Mate™ Tables
Training Table Power Options
TRANSACTION™ Conference & Media Tables
Ranger® Team Tables
CSII™ Conference Tables
Bistro Series Tables
Event Tables
Conference / Training Room Accessories

COHERE™ TABLES

GSA GIZA/CAP Intertek

Cohere Tables can go everywhere throughout an organization to create a coherent, cohesive look and feel. Multiple shapes, sizes and functionalities allow limitless applications, while simple lines and a shared foot design deliver a single, understated aesthetic that complements and unifies any space. Cohere Tables blend seamlessly with e5 collaborative furniture as well as all other Mayline products.

FLIP & NEST TABLES

- This table is available in T-Leg configuration only.
- Surfaces are constructed with 1 1/8" thick high pressure laminate with 3mm T-Mold or 3mm Edgeband.
- Optional frosted acrylic modesty panels are available and attach to the underside of the surface.
- This table is available with casters only. 3" locking, non-marring black casters are standard.
- Optional premium 3" white nylon caster with locking gray urethane anti-vibration tread for smooth and quiet movement is available. See Accessories section.
- Flipping mechanism comes standard in Silver finish.
- Overall table height is 29" from floor to top of 1 1/8" surface.
- Base available in Black, Silver or White powdercoat finishes.
- Optional polished aluminum feet are available for an upcharge.
- Glides have 1/2" leveling range.

EDGE OPTIONS

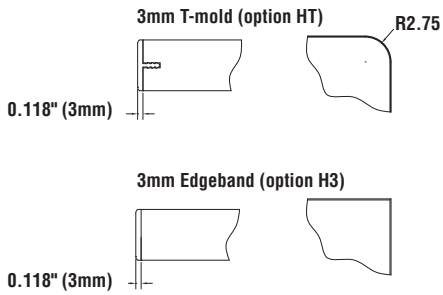

HOW TO SPECIFY

Start with base model number and ***SELECT ONE CODE FROM EACH OF THE OPTIONS*** to complete your final model number for ordering:

Select **MODEL NUMBER** ***(ie., FR1848)***	**Option 1 [✤] EDGE**	**Option 2 [■] CUTOUT**	**Option 3 [●] LEG STYLE**	**Option 4 [✔] FOOT FINISH**	**Option 5 [✘] CASTER**
	HT = T-Mold *(Radiused Corner)*	**N** = No Grommet *(No Power)*	**T** = T-Leg Only	**P** = Standard *(Same Color)*	**S** = **Standard Black Only**
	H3 = Edgeband *(Square Corner)*	**G** = Center Grommet Only + $30		**A** = Polished Aluminum + $40 List	
		M = Left/Right Grommet + $60			
Add codes to indicate options you would like:	**HT** *(with T-Mold Edges)*	**N** *(Without Grommet)*	**T**	**P** *(in Standard Color)*	**S**

The final Model Number for Base Product FR1848 with the highlighted options would be FR1848-HT-N-T-P-S *(or FR1848HTNTPS)*.

SPECIFICATION TIPS:

- Surfaces flip up.
- Overall footprint depth is 20 1/2" for 24"D table. Each additionally nested table adds 7 1/2" in total footprint depth. Total depth for 3 tables would be 35 1/2".
- **54"W surfaces and smaller are available with a center grommet option only. 60"W surface and larger are also available with two grommets positioned on the left and right.**
- Circular grommet cutouts are 1 3/4" diameter and located 3 1/2" from the rear of the surface and 7" from the end for the left and right option. Grommets are available in Black only and only on rectangular tops.
- Support beam provides integrated cable management clips.
- Optional ganging hardware is available. Specify one package per seam.
- Access to all standard Wilsonart, Nevamar, Formica, and Pionite laminates is available.

FLIP & NEST TABLES

FR1848HTGTPS
(Shown with optional grommet hole.)

FR2472HTNTPS

Model No.						Description	Wt.	List Price
18"D Rectangular								
Options:	**1**	**2**	**3**	**4**	**5**			
FR1848	✤	■	T	✔	S	48" x 18" Rectangular	52#	$894
FR1860	✤	■	T	✔	S	60" x 18" Rectangular	61#	$915
FR1872	✤	■	T	✔	S	72" x 18" Rectangular	69#	$983
24"D Rectangular								
Options:	**1**	**2**	**3**	**4**	**5**			
FR2436	✤	■	T	✔	S	36" x 24" Rectangular	55#	$894
FR2442	✤	■	T	✔	S	42" x 24" Rectangular	60#	$910
FR2448	✤	■	T	✔	S	48" x 24" Rectangular	65#	$926
FR2454	✤	■	T	✔	S	54" x 24" Rectangular	71#	$941
FR2460	✤	■	T	✔	S	60" x 24" Rectangular	76#	$952
FR2466	✤	■	T	✔	S	66" x 24" Rectangular	82#	$1035
FR2472	✤	■	T	✔	S	72" x 24" Rectangular	87#	$1092

FLIP & NEST TABLES (CONTINUED)

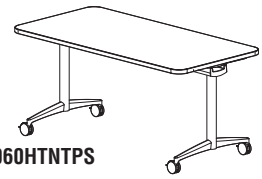

FR3060HTNTPS

Model No.						Description	Wt.	List Price
30"D Rectangular								
Options:	**1**	**2**	**3**	**4**	**5**			
FR3036	✤	■	T	✔	S	30" x 36" Rectangular	68#	$946
FR3042	✤	■	T	✔	S	30" x 42" Rectangular	73#	$967
FR3048	✤	■	T	✔	S	48" x 30" Rectangular	78#	$988
FR3054	✤	■	T	✔	S	54" x 30" Rectangular	85#	$1004
FR3060	✤	■	T	✔	S	60" x 30" Rectangular	92#	$1030
FR3066	✤	■	T	✔	S	66" x 30" Rectangular	98#	$1123
FR3072	✤	■	T	✔	S	72" x 30" Rectangular	105#	$1165

FT2448HTNTPS

36"D Rectangular								
Options:	**1**	**2**	**3**	**4**	**5**			
FR3648	✤	■	T	✔	S	48" x 36" Rectangular	91#	$1118
FR3660	✤	■	T	✔	S	60" x 36" Rectangular	107#	$1238
FR3672	✤	■	T	✔	S	72" x 36" Rectangular	123#	$1300
Transition Tables								
Options:	**1**	**2**	**3**	**4**	**5**			
FT2448	✤	■	T	✔	S	48" x 24" Transition	62#	$926
FT3048	✤	■	T	✔	S	48" x 30" Transition	69#	$988

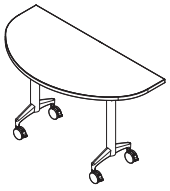

FH2448

Half Round Tables								
Options:	**1**	**2**	**3**	**4**	**5**			
FH2448	✤	■	T	✔	S	24" x 48" Half Round	62#	$926
FH3060	✤	■	T	✔	S	30" x 60" Half Round	69#	$1030
FH3672	✤	■	T	✔	S	36" x 72" Half Round	75#	$1300

FLIP & NEST ACCESSORIES

Frosted Acrylic Modesty Panels for T-Leg Tables– Attaches to underside of surface (hinged). Hardware included.

- Select paint color for bracket/hardware (Black, Silver or White).

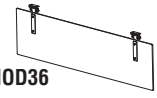

FTMOD36

Model No.	Description	Wt.	List Price
FTMOD24	24"W x 12"H – For Transition Table	5#	$290
FTMOD36	36"W x 12"H – For 48" Table	7#	$321
FTMOD42	42"W x 12"H – For 54" Table	8#	$342
FTMOD48	48"W x 12"H – For 60" Table	9#	$363
FTMOD54	54"W x 12"H – For 66" Table	10#	$394
FTMOD60	60"W x 12"H – For 72" Table	11#	$415
Ganging Kits			
10GA	Universal Ganging Accessory	1#	$52
Optional White Caster			
FWCAST	Premium 3" locking, White Caster with Gray thread. Kit of 4 Casters.		$62

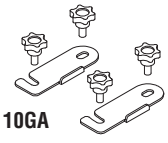

10GA

HOW TO SPECIFY: Select Model No. & Add Suffix Codes

OPTION		OPTION		OPTION		OPTION		OPTION	
1	Select EDGE	**2**	Select CUTOUT	**3**	LEG	**4**	Select FOOT Finish	**5**	CASTER
[✤]	T-Mold *(HT)*	**[■]**	None *(N)*	**[T]**	T-Leg ONLY	**[✔]**	Standard *(P)*	**[S]**	Black ONLY
	Edgeband *(H3)*		Center *(G)**		T-Leg *(T)*		Pol. Alum. *(A)**		Black *(S)*
			Left/Right *(M)**						

*** NOTE:** See details at beginning of section for upcharge costs for these option selections.

COHERE™ TABLES

GSA GIZA/CAP Intertek

FIXED HEIGHT TABLES

- Surfaces are constructed with 1 1/8" thick high pressure laminate with 3mm T-Mold or 3mm Edgeband.
- Optional frosted acrylic modesty panels are available and attach to the underside of the surface.
- This table is available with Black glides (Glides have 1/2" leveling range) or 3" Black locking casters.
- Overall table height is 29" from floor to top of 1 1/8" surface.
- Base available in Black, Silver or White powdercoat finishes.
- Optional polished aluminum feet are available for an upcharge.
- Glides and casters are not field interchangeable as the overall table height will be affected.

EDGE OPTIONS

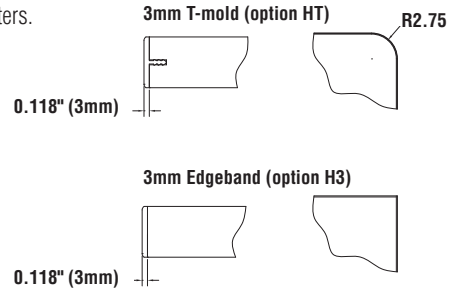

HOW TO SPECIFY

Start with base model number and ***SELECT ONE CODE FROM EACH OF THE OPTIONS*** to complete your final model number for ordering:

Select **MODEL NUMBER** ***(ie., HR1848)***	**Option 1 [✤] EDGE**	**Option 2 [■] CUTOUT**	**Option 3 [●] LEG STYLE**	**Option 4 [✔] FOOT FINISH**
	HT = T-Mold *(Radiused Corner)*	**N** = No Grommet *(No Power)*	**T** = T-Leg w/Glide	**P** = Standard *(Same Color)*
	H3 = Edgeband *(Square Corner)*	**G** = Center Grommet Only + $30	**C** = C-Leg w/Glide	**A** = Polished Aluminum + $40 List
		M = Left/Right Grommet + $60	**R** = T-Leg w/Standard Caster + $40	
Add codes to indicate options you would like:	**HT** *(with T-Mold Edges)*	**N** *(Without Grommet)*	**T** *(with T-Leg Style)*	**P** *(in Standard Color)*

The final Model Number for Base Product HR1848 with the highlighted options would be HR1848-HT-N-T-P *(or HR1848HTNTP)*.

SPECIFICATION TIPS:

- C-Legs are available only in 24" and 30" deep surfaces.
- **54"W surfaces and smaller are available with a center grommet option only. 60"W surface and larger are also available with two grommets positioned on the left and right.**
- Grommet cutouts are 1 3/4" diameter and located 3 1/2" from the rear of the surface and 7" from the end for the left and right option. Grommets are available in black only.
- All surfaces 60" and longer utilize a steel reinforcement bar to prevent surface deflection.
- Optional ganging hardware is available. Specify one package per seam.
- These tables are designed for static use applications only. They are not designed to be slid and/or dragged across any floor space. For applications requiring mobility, please refer to one of our many mobile training options.
- Access to all standard Wilsonart, Nevamar, Formica, and Pionite laminates is available.

FIXED HEIGHT TABLES

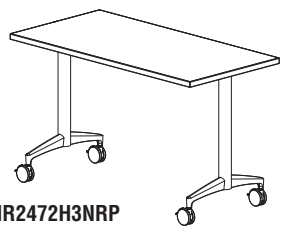

HR2472H3NRP

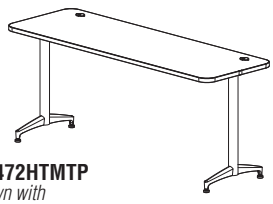

HR2472HTMTP
(Shown with optional grommet holes.)

Model No.					Description	Wt.	List Price
18"D Rectangular							
Options:	**1**	**2**	**3**	**4**			
HR1848	✤	■	**T/R***	✔	48" x 18" Rectangular	44#	$645
HR1860	✤	■	**T/R***	✔	60" x 18" Rectangular	52#	$676
HR1872	✤	■	**T/R***	✔	72" x 18" Rectangular	59#	$707

*** NOTE:** C-Leg not available on 18"D.

24"D Rectangular							
Options:	**1**	**2**	**3**	**4**			
HR2436	✤	■	●	✔	36" x 24" Rectangular	47#	$660
HR2442	✤	■	●	✔	42" x 24" Rectangular	52#	$676
HR2448	✤	■	●	✔	48" x 24" Rectangular	57#	$692
HR2454	✤	■	●	✔	54" x 24" Rectangular	62#	$723
HR2460	✤	■	●	✔	60" x 24" Rectangular	67#	$733
HR2466	✤	■	●	✔	66" x 24" Rectangular	72#	$770
HR2472	✤	■	●	✔	72" x 24" Rectangular	77#	$785

FIXED HEIGHT TABLES (CONTINUED)

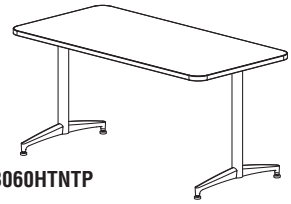

HR3060HTNTP

Model No.					Description	Wt.	List Price
30"D Rectangular							
Options:	**1**	**2**	**3**	**4**			
HR3036	✤	■	●	✔	36" x 30" Rectangular	53#	$727
HR3042	✤	■	●	✔	42" x 30" Rectangular	60#	$733
HR3048	✤	■	●	✔	48" x 30" Rectangular	70#	$744
HR3054	✤	■	●	✔	54" x 30" Rectangular	76#	$749
HR3060	✤	■	●	✔	60" x 30" Rectangular	83#	$764
HR3066	✤	■	●	✔	66" x 30" Rectangular	89#	$785
HR3072	✤	■	●	✔	72" x 30" Rectangular	95#	$801
36"D Rectangular							
Options:	**1**	**2**	**3**	**4**			
HR3648	✤	■	●	✔	48" x 36" Rectangular	83#	$785
HR3660	✤	■	●	✔	60" x 36" Rectangular	98#	$848
HR3672	✤	■	●	✔	72" x 36" Rectangular	113#	$910
Transition Tables							
Options:	**1**	**2**	**3**	**4**			
HT2448	✤	■	●	✔	48" x 24" Transition	59#	$692
HT3048	✤	■	●	✔	48" x 30" Transition	66#	$744

HT2448HTNCP

FIXED HEIGHT TABLES ACCESSORIES

- Select paint color for bracket hardware (Black, Silver or White).

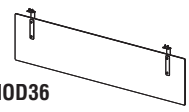

HMMOD36

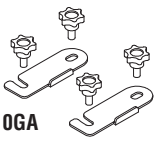

10GA

Model No.	Description	Wt.	List Price
Frosted Acrylic Modesty Panels (Hardware included.)			
HMMOD24	24"W x 12"H – For Transition Table	5#	$290
HMMOD36	36"W x 12"H – For 48" Table	7#	$321
HMMOD42	42"W x 12"H – For 54" Table	8#	$342
HMMOD48	48"W x 12"H – For 60" Table	9#	$363
HMMOD54	54"W x 12"H – For 66" Table	10#	$394
HMMOD60	60"W x 12"H – For 72" Table	11#	$415
Ganging Kits			
10GA	Universal Ganging Accessory	1#	$52
Optional White Caster			
FWCAST	Premium 3" locking, White Caster with Gray thread. Kit of 4 soft Casters.		$62

Training Table Power Options available for fixed height tables. Please see page 213.

HOW TO SPECIFY: Select Model No. & Add Suffix Codes

OPTION 1 [✤]	Select EDGE T-Mold *(HT)* Edgeband *(H3)*	**OPTION 2** [■]	Select CUTOUT None *(N)* Center *(G)** Left/Right *(M)**	**OPTION 3** [●]	Select LEG T-Leg *(T)* C-Leg *(C)* T-Leg w/Caster *(R)*	**OPTION 4** [✔]	Select FOOT Finish Standard *(P)* Pol. Alum. *(A)**

*** NOTE:** See details at beginning of section for upcharge costs for these option selections.

COHERE™ TABLES

GSA GIZA/CAP Intertek

PIN HEIGHT ADJUSTABLE TABLES

- This rectangular table is available in T-Leg configuration only.
- Under table clearance is 24 3/4" to 32 3/4".
- Table height from floor to top of surface ranges from 26" to 34" on 1" increments (8" travel range).
- Meets ADA height of 32".
- Surfaces are constructed with 1 1/8" thick high pressure laminate with 3mm T-Mold or 3mm Edgeband.
- This table is available with Black glides (Glides have 1/2" leveling range) or 3" Black locking casters.
- Base available in Black, Silver or White powdercoat finishes.
- Optional polished aluminum feet are available for an upcharge.
- Glides and casters are not field interchangeable.
- Glides have 1/2" leveling range.

EDGE OPTIONS

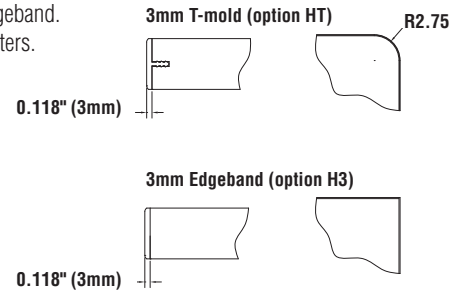

HOW TO SPECIFY

Start with base model number and ***SELECT ONE CODE FROM EACH OF THE OPTIONS*** to complete your final model number for ordering:

Select **MODEL NUMBER** ***(ie., PR1848)***	**Option 1 [✤] EDGE**	**Option 2 [■] CUTOUT**	**Option 3 [●] LEG STYLE**	**Option 4 [✔] FOOT FINISH**
	HT = T-Mold *(Radiused Corner)*	**N** = No Grommet *(No Power)*	**T** = T-Leg with Glide	**P** = Standard *(Same Color)*
	H3 = Edgeband *(Square Corner)*	**G** = Center Grommet Only + $30	**R** = T-Leg with Standard Caster + $40	**A** = Polished Aluminum + $40 List
		M = Left/Right Grommet + $60		
Add codes to indicate options you would like:	**HT** *(with T-Mold Edges)*	**N** *(Without Grommet)*	**T** *(T-Leg with Glide)*	**P** *(in Standard Color)*

The final Model Number for Base Product PR1848 with the highlighted options would be PR1848-HT-N-T-P *(or PR1848HNTP).*

SPECIFICATION TIPS:

- **54"W surfaces and smaller are available with a center grommet option only. 60"W surface and larger are also available with two grommets positioned on the left and right.**
- Grommet cutouts are 1 3/4" round and located 3 1/2" from the rear of the surface and 7" from the end for the left and right option. Grommets are available in black only.
- All surfaces 60" and longer utilize a steel reinforcement bar to prevent surface deflection.
- Optional ganging hardware is available. Specify one package per seam.
- Access to all standard Wilsonart, Nevamar, Formica, and Pionite laminates is available.

PIN HEIGHT ADJUSTABLE TABLES

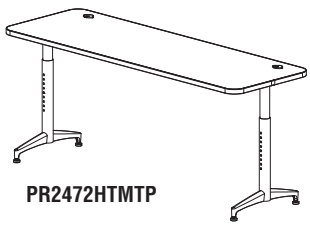

PR2472HTMTP

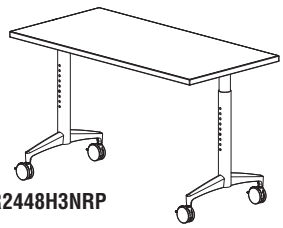

PR2448H3NRP

Model No.					Description	Wt.	List Price
18"D Rectangular							
Options:	**1**	**2**	**3**	**4**			
PR1848	✤	■	●	✔	48" x 18" Rectangular	50#	$941
PR1860	✤	■	●	✔	60" x 18" Rectangular	58#	$1004
PR1872	✤	■	●	✔	72" x 18" Rectangular	65#	$1030
24"D Rectangular							
Options:	**1**	**2**	**3**	**4**			
PR2436	✤	■	●	✔	36" x 24" Rectangular	53#	$941
PR2442	✤	■	●	✔	42" x 24" Rectangular	58#	$983
PR2448	✤	■	●	✔	48" x 24" Rectangular	63#	$988
PR2454	✤	■	●	✔	54" x 24" Rectangular	68#	$1024
PR2460	✤	■	●	✔	60" x 24" Rectangular	73#	$1045
PR2466	✤	■	●	✔	66" x 24" Rectangular	78#	$1076
PR2472	✤	■	●	✔	72" x 24" Rectangular	83#	$1113

PIN HEIGHT ADJUSTABLE TABLES (CONTINUED)

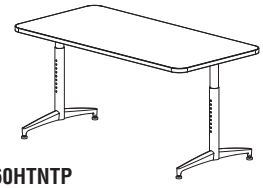

PR3060HTNTP

Model No.					Description	Wt.	List Price
30"D Rectangular							
Options:	**1**	**2**	**3**	**4**			
PR3036	✤	■	●	✔	36" x 30" Rectangular	71#	$1024
PR3048	✤	■	●	✔	48" x 30" Rectangular	76#	$1045
PR3054	✤	■	●	✔	54" x 30" Rectangular	82#	$1097
PR3060	✤	■	●	✔	60" x 30" Rectangular	89#	$1128
PR3066	✤	■	●	✔	66" x 30" Rectangular	95#	$1149
PR3072	✤	■	●	✔	72" x 30" Rectangular	101#	$1165
36"D Rectangular							
Options:	**1**	**2**	**3**	**4**			
PR3648	✤	■	●	✔	48" x 36" Rectangular	89#	$1118
PR3660	✤	■	●	✔	60" x 36" Rectangular	104#	$1201
PR3672	✤	■	●	✔	72" x 36" Rectangular	119#	$1238

TRANSITION TABLES

PT2448HTNPP

Model No.					Description	Wt.	List Price
Options:	**1**	**2**	**3**	**4**			
PT2448	✤	■	●	✔	48"W x 24"H Transition	59#	$988
PT3048	✤	■	●	✔	48"W x 30"H Transition	66#	$1045

PIN HEIGHT ADJUSTABLE TABLES ACCESSORIES

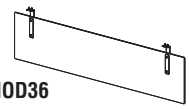

HMMOD36

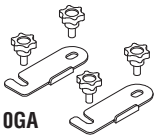

10GA

Model No.	Description	Wt.	List Price
Frosted Acrylic Modesty Panels (Hardware included.)			
HMMOD36	36"W x 12"H – For 48" Table	7#	$321
HMMOD42	42"W x 12"H – For 54" Table	8#	$342
HMMOD48	48"W x 12"H – For 60" Table	9#	$363
HMMOD54	54"W x 12"H – For 66" Table	10#	$394
HMMOD60	60"W x 12"H – For 72" Table	11#	$415
Ganging Kits			
10GA	Universal Ganging Accessory	1#	$52
Optional White Caster			
FWCAST	Premium 3" locking, White Caster with Gray thread. Kit of 4 Casters.		$62

HOW TO SPECIFY: Select Model No. & Add Suffix Codes

OPTION		**OPTION**		**OPTION**		**OPTION**	
1	Select EDGE	**2**	Select CUTOUT	**3**	LEG	**4**	Select FOOT Finish
[✤]	T-Mold *(HT)*	**[■]**	None *(N)*	**[●]**	T-Leg w/Caster *(R)*	**[✔]**	Standard *(P)*
	Edgeband *(H3)*		Center *(G)**		T-Leg *(T)*		Pol. Alum. *(A)**
			Left/Right *(M)**				

*** NOTE:** See details at beginning of section for upcharge costs for these option selections.

COHERE™ TABLES

GSA GIZA/CAP

HOSPITALITY TABLES

This table is available in dining or bar height and is ideal for break rooms, cafeterias or any hospitality type setting.

- Surfaces are constructed with 1 1/8" thick high pressure laminate with 3mm T-Mold or 3mm Edgeband.
- This table is available with Black glides only. Glides have 1/2" leveling range.
- Overall dining table height is 29" from floor to top of 1 1/8" surface. Overall bar table height is 42" from floor to top of 1 1/8" surface.
- Base available in Black, Silver or White powdercoat finishes.
- Bases ship fully assembled.
- Optional polished aluminum feet are available for an upcharge.

EDGE OPTIONS

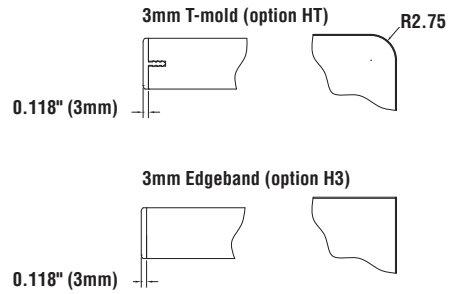

HOW TO SPECIFY

Start with base model number and ***SELECT ONE CODE FROM THE OPTION*** to complete your final model number for ordering:

Select **MODEL NUMBER** ***(ie., HD1848)***	**Option 1 [✤] EDGE**	**Option 2 [■] FOOT FINISH**
	HT = T-Mold *(Radiused Corner)*	**P** = Standard *(Same Color)*
	H3 = Edgeband *(Square Corner)*	**A** = Polished Aluminum + $40 List
Add codes to indicate options you would like:	**HT** *(with T-Mold Edges)*	**P** *(in Standard Color)*

The final Model Number for Base Product HD24D with the highlighted options would be HD24D-HT-P *(or HD24DHTP)*.

SPECIFICATION TIPS:

- Access to all standard Wilsonart, Nevamar, Formica, and Pionite laminates is available.

HOSPITALITY TABLES

HD24DHTP

HB24SHTP

Model No.			Description	Wt.	List Price
29"H Dining Height					
Option:	**1**	**2**			
HD24D	✤	■	24" Round	32#	$655
HD30D	✤	■	30" Round	42#	$692
HD36D	✤	■	36" Round	52#	$790
HD42D	✤	■	42" Round	66#	$874
HD24S	✤	■	24" Square	36#	$655
HD30S	✤	■	30" Square	48#	$692
HD36S	✤	■	36" Square	63#	$790
HD42S	✤	■	42" Square	80#	$874
42"H Bar Height					
Option:	**1**	**2**			
HB24D	✤	■	24" Round	33#	$676
HB30D	✤	■	30" Round	43#	$712
HB36D	✤	■	36" Round	54#	$811
HB42D	✤	■	42" Round	68#	$894
HB24S	✤	■	24" Square	37#	$676
HB30S	✤	■	30" Square	49#	$712
HB36S	✤	■	36" Square	64#	$811
HB42S	✤	■	42" Square	81#	$894

HOW TO SPECIFY: Select Model No. & Add Suffix Codes

OPTION 1 [✤]	Select EDGE T-Mold *(HT)* Edgeband *(H3)*	**OPTION 2** [■]	Select FOOT Finish Standard *(P)* Pol. Alum. *(A)**

*** NOTE:** See details at beginning of section for upcharge costs for this option selection.

COHERE™ TABLES

OCCASIONAL TABLES

Ideal for private offices or public space areas, these coffee and end tables will help to add style to any space.

- Surfaces are constructed with 1 1/8" thick high pressure laminate with 3mm T-Mold or 3mm Edgeband.
- This table is available with Black glides only. Glides have 1/2" leveling range.
- Overall End Table height is 20" from floor to top of 1 1/8" surface.
  Overall Coffee Table height is 16" from floor to top of 1 1/8" surface.
- Base available in Black, Silver or White powdercoat finishes.
- Bases ship fully assembled.
- Optional polished aluminum foot is available for an upcharge.

EDGE OPTIONS

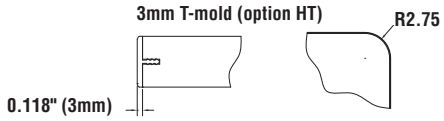

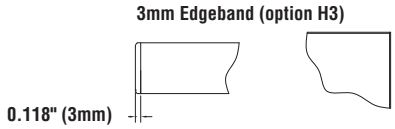

HOW TO SPECIFY

Start with base model number and ***SELECT ONE CODE FROM THE OPTION*** to complete your final model number for ordering:

Select **MODEL NUMBER** ***(ie., LE24D)***	**Option 1 [✤] EDGE**	**Option 2 [■] FOOT FINISH**
	HT = T-Mold *(Radiused Corner)*	**P** = Standard *(Same Color)*
	H3 = Edgeband *(Square Corner)*	**A** = Polished Aluminum + $40 List
Add codes to indicate options you would like:	**HT** *(with T-Mold Edges)*	**P** *(in Standard Color)*

The final Model Number for Base Product LE24D with the highlighted options would be LE24D-HT-P *(or LE24DHTP).*

SPECIFICATION TIPS:

- Access to all standard Wilsonart, Nevamar, Formica, and Pionite laminates is available.

OCCASIONAL TABLES

LE30SHTP

LC48DHTP

Model No.			Description	Wt.	List Price
20"H End Tables					
Option:	**1**	**2**			
LE24D	✤	■	24" Round	30#	$645
LE30D	✤	■	30" Round	40#	$697
LE36D	✤	■	36" Round	50#	$770
LE24S	✤	■	24" Square	34#	$645
LE30S	✤	■	30" Square	46#	$697
LE36S	✤	■	36" Square	61#	$770
16"H Coffee Tables					
Option:	**1**	**2**			
LC42D	✤	■	42" Round	65#	$905
LC48D	✤	■	48" Round	80#	$952
LC42S	✤	■	42" Square	78#	$905
LC48S	✤	■	48" Square	97#	$915

COHERE™ TABLES

CONFERENCE TABLES

Full size conference tables perfect for collaborative or multipurpose applications.

- Surfaces are constructed with 1 1/8" thick high pressure laminate with 3mm T-Mold or 3mm Edgeband.
- This table is available with Black glides only. Glides have 1/2" leveling range.
- Base available in Black, Silver or White powdercoat finishes.
- Optional polished aluminum foot/bridge is available for an upcharge.
- Top sizes 120" and smaller come as one piece. 144" tops come in two pieces. 216" tops come in three pieces.
- Y and multiple column bases require assembly.
- Overall table height is 29" from floor to top of 1 1/8" worksurface.

EDGE OPTIONS

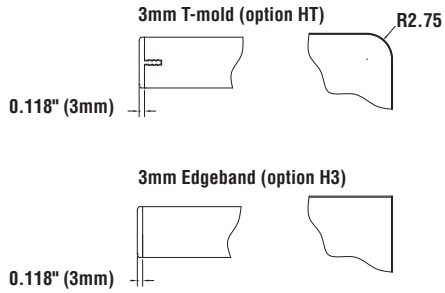

HOW TO SPECIFY

Start with base model number and ***SELECT ONE CODE FROM EACH OF THE OPTIONS*** to complete your final model number for ordering:

Select **MODEL NUMBER** ***(ie., CX4848D)***	**Option 1 [✤] EDGE**	**Option 2 [■] CUTOUT**	**Option 3 [●] FOOT FINISH**
	HT = T-Mold *(Radiused Corner)*	**N** = No Grommet Only *(No Power)*	**P** = Standard *(Same Color)*
	H3 = Edgeband *(Square Corner)*		**B** = Polished Aluminum + $80 List
Add codes to indicate options you would like:	**HT** *(with T-Mold Edges)*	**N**	**P** *(Same Color)*

The final Model Number for Base Product CX4848D with the highlighted options would be CX4848D-HT-N-P *(or CX4848DHTNP).*

SPECIFICATION TIPS:

- 48" and 54" round tables are supported with an X-Base (E1).
- 60" round, and 48" and 54" square tables are supported with a quad-post X-Base (E2) for maximum stability.
- Rectangular and Boat Conference Tables are supported with multiple Y and Bridge Bases that vary depending on surface size. See base style images for more details.
- Access to all standard Wilsonart, Nevamar, Formica, and Pionite laminates is available.

BASE STYLES:

E1 =

E2 =

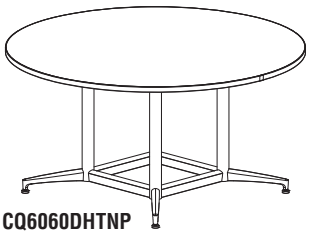

CQ6060DHTNP

Model No.				Description	Base Style	Suggested Seating Capacity*	Wt.	List Price
Single Base								
Option:	**1**	**2**	**3**					
CX4848D	✤	**N**	●	48" Round	E1	4	82#	$1238
CX5454D	✤	**N**	●	54" Round	E1	4	98#	$1456
CQ6060D	✤	**N**	●	60" Round	E2	6	130#	$2288
CQ4848S	✤	**N**	●	48" Square	E2	4	111#	$1747
CQ5454S	✤	**N**	●	54" Square	E2	4	133#	$1872

* Recommended seating capacity based on 27" per chair.

CONFERENCE TABLES (CONTINUED)

BASE STYLES:

A1 =

A2 =

A3 =

A4 =

A5 =

Model No.				Description	Base Style	Suggested Seating Capacity*	Wt.	List Price
Y-Base Configuration								
Option:	**1**	**2**	**3**					
CY3672R	✤	N	●	72" x 36" Rectangular	A1	6	111#	$1430
CY3672B	✤	N	●	72" x 36" Boat	A1	6	111#	$1430
CY4284R	✤	N	●	84" x 42" Rectangular	A1	8	145#	$1742
CY4284B	✤	N	●	84" x 42" Boat	A1	8	145#	$1742
CY4296R	✤	N	●	96" x 42" Rectangular	A1	8	163#	$1976
CY4296B	✤	N	●	96" x 42" Boat	A1	8	163#	$1976
CY4896R	✤	N	●	96" x 48" Rectangular	A1	8	183#	$2288
CY4896B	✤	N	●	96" x 48" Boat	A1	8	183#	$2288
CY5496R	✤	N	●	96" x 54" Rectangular	A3	8	214#	$3026
CY5496B	✤	N	●	96" x 54" Boat	A3	8	214#	$3026
CY48108R	✤	N	●	108" x 48" Rectangular	A1	10	204#	$2527
CY48108B	✤	N	●	108" x 48" Boat	A1	10	204#	$2527
CY54108R	✤	N	●	108" x 54" Rectangular	A3	10	239#	$3110
CY54108B	✤	N	●	108" x 54" Boat	A3	10	239#	$3110
CY48120R	✤	N	●	120" x 48" Rectangular	A2	10	228#	$3099
CY48120B	✤	N	●	120" x 48" Boat	A2	10	228#	$3099
CY54120R	✤	N	●	120" x 54" Rectangular	A4	10	267#	$4139
CY54120B	✤	N	●	120" x 54" Boat	A4	10	267#	$4139
CY54144R	✤	N	●	144" x 54" Rectangular	A4	10	314#	$4857
CY54144B	✤	N	●	144" x 54" Boat	A4	10	314#	$4857
CY54216R	✤	N	●	216" x 54" Rectangular	A5	14	453#	$7259
CY54216B	✤	N	●	216" x 54" Boat	A5	14	453#	$7259

*** NOTE:** Recommended seating capacity based on 27" per chair.
Additional lead time required for 120" and larger.

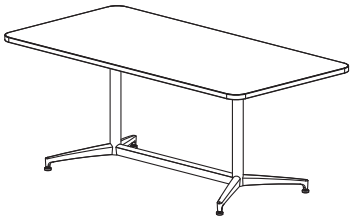

CY3672RHTNP

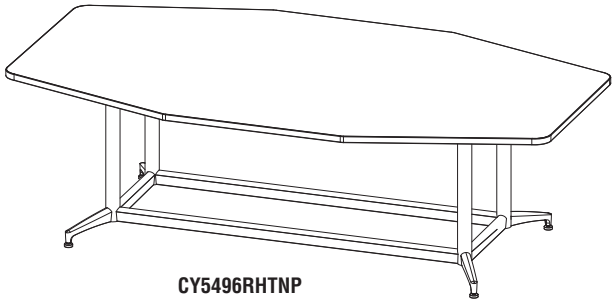

CY5496RHTNP

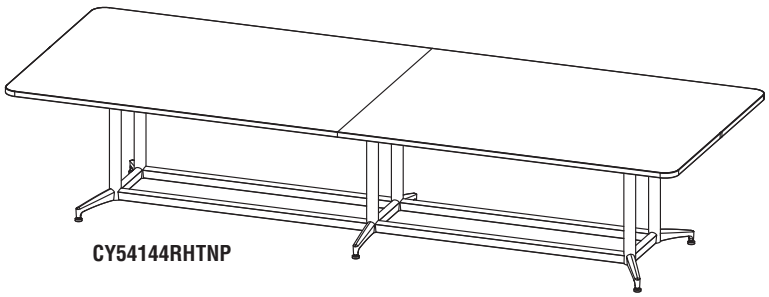

CY54144RHTNP

HOW TO SPECIFY:
Select Model No.
& Add Suffix Codes

OPTION		**OPTION**		**OPTION**	
1	Select EDGE T-Mold *(HT)*	**2**	CUTOUT None ONLY	**3**	Select FOOT Finish Standard *(P)*
[✤]	Edgeband *(H3)*	**[N]**	None *(N)*	**[●]**	Pol. Alum. *(B)**

*** NOTE:** See details at beginning of section for upcharge costs for these option selections.

HEIGHT ADJUSTABLE TABLES

LT-SERIES

Drive System: 110V, 60Hz AC input, 12V DC motor. 120 lb. capacity. Draws 1.6 amps under full load.
Travel Range: 16.5" of vertical adjustment from 25" to 41.5"; Full travel time is 13 seconds.
Keyboard Surface: DataCenter mechanism adjusts from 8" below to 7" above work surface and has a +15° to -15° tilt.
Work Surface: Thermally-fused laminate TFL with T-mold edge is standard. Add "L" suffix for high pressure laminate HPL with T-mold edge (prices shown).
DataCenter Surface: 11"D x 27"W (minimum) for rectangular surfaces. 11.5"D x 15"W (minimum) for corner surfaces.
Base Color: List prices shown are for black bases. The non-adjustable portion of the base can be painted in any of our Corporate Colors for a $50 List upcharge. Add a "C" suffix after the part number if interested.
Meets ADA standards.

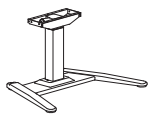

Model No.	Description	Wt.	List Price (Black Base Only)
LT-Series Base Only			
6049	Base only	55#	$1087

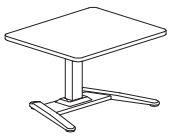

Model No.	Description	Wt.	TFL List Price	HPL List Price
LT-Series - Single surface rectangular.				"L" Suffix
604LT	36" x 24"	100#	$1607	$1731
605LT	36" x 30"	103#	$1656	$1788
609LT	42" x 24"	103#	$1704	$1835
610LT	42" x 30"	107#	$1735	$1876

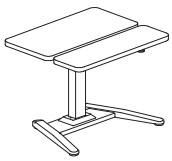

LT-Series - Dual surface with 11"D DataCenter Keyboard Mechanism.				"L" Suffix
605LTW	36" x 30"	124#	$2256	$2388
610LTW	42" x 30"	129#	$2299	$2441

Note: DataCenter keyboard mechanisms are available for $761 list each. Please see page 199 for more details.

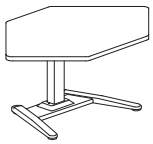

LT-Series - Single surface corner.				"L" Suffix
645LT	36" x 24"	110#	$1760	$1882
655LT	42" x 24"	115#	$1839	$1971
650LT	42" x 30"	119#	$1848	$1991

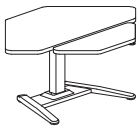

LT-Series - Corner Dual Surface with DataCenter Keyboard Mechanism.				"L" Suffix
652LTW	36" x 24"	125#	$2338	$2478
655LTW	42" x 24"	130#	$2468	$2631
657LTW	42" x 30"	134#	$2495	$2658

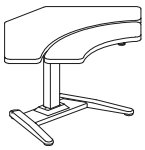

LT-Series - Curved Corner Dual Surface with DataCenter Keyboard Mechanism.				"L" Suffix
685LTW	42" x 24"	135#	$2409	$2545
687LTW	42" x 30"	139#	$2435	$2570

HEIGHT ADJUSTABLE TABLES

E-SERIES

Drive System: 110V, 60 H input, 24V DC motor. 150 lb. capacity. Draws 1.2 amps under full load.
Travel Range: 16" of vertical adjustment from 26" to 42": Full travel time is 37 seconds.
Keyboard Surface: DataCenter mechanism adjusts from 8" below to 7" above work surface. Both have +15° to -15° tilt.
Work Surfaces: Thermally-fused low-pressure laminate with T-mold edge is standard. Add "L" suffix for high pressure laminate with T-mold edge (prices shown).
DataCenter Surface: 11"D x 27"W (minimum) for rectangular configurations.
Base Color: All corporate colors available.

- ANSI / BIFMA
- Control switch standard with up / down only.

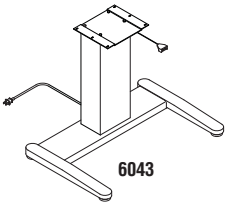
6043

Model No.	Description	Wt.	List Price
E-Series Base Only			
6043	Base for rectangular top sizes up to 48"W x 30"D, 48" x 30" corner, 16" travel	75#	$1471
6045	Base for corner top sizes up to 30" x 48", 16" travel - wedge shape	75#	$1471
6047	Base for corner top sizes up to 36"W x 24"D, and 42"W - wedge shape, 16" travel	67#	$1471

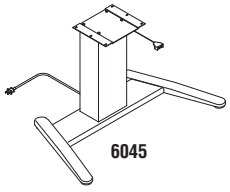
6045

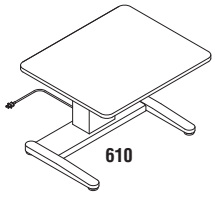
610

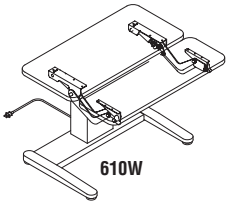
610W

Model No.	Description	Wt.	TFL List Price	HPL List Price
E-Series - Single surface.				"L" Suffix
615S	48" x 24"	126#	$1740	$1899
605	36" x 30"	123#	$1720	$1878
610	42" x 30"	124#	$1740	$1958
615	48" x 30"	135#	$1810	$2035
E-Series - Dual surface with 11" D DataCenter Keyboard Mechanism.				"L" Suffix
605W	36" x 31" with DataCenter	144#	$2594	$2777
610W	42" x 31" with DataCenter	149#	$2669	$2848
615W	48" x 31" with DataCenter	155#	$2711	$2938

Note: DataCenter keyboard mechanisms are available for $761 list each. Please see page 199 for more details.

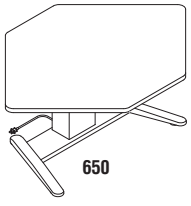
650

Model No.	Description	Wt.	TFL List Price	HPL List Price
E-Series - Single surface corner unit.				"L" Suffix
650S	42" x 24"	132#	$2107	$2265
650	42" x 30"	135#	$2176	$2431

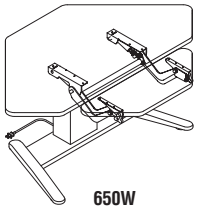
650W

Model No.	Description	Wt.	TFL List Price	HPL List Price
E-Series - Corner dual surface with DataCenter Keyboard Mechanism.				"L" Suffix
650SW	42" x 24"	150#	$2937	$3082
650W	42" x 30"	155#	$2964	$3096
670W	48" x 30"	172#	$3124	$3353

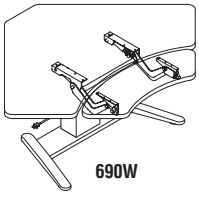
690W

Model No.	Description	Wt.	TFL List Price	HPL List Price
E-Series Curved - Corner dual surface with DataCenter Keyboard Mechanism.				"L" Suffix
680W	42" x 30"	155#	$3390	$3635
690W	48" x 30"	172#	$3567	$3811

HEIGHT ADJUSTABLE TABLES

XR-SERIES

Drive System: 24V, Chain Drive, DC motor. 2-leg system has 250 lbs. lifting capacity and draws a maximum of 3 amps. The 3-leg system has 375 lbs. of lifting capacity and draws a maximum of 4.5 amps start-up and full load.

Travel Range: 26.5" of vertical adjustment from 24" to 50.5" by way of simple to use control switch. Full travel time is 16 seconds.

Work Surfaces: 1 1/8" high pressure laminate HPL with T-mold edge is standard.

DataCenter Surfaces: 11"D x 30"W (minimum) for rectangular configurations.

Meets ADA standards.

Keyboard Surface: Optional mechanism extends keyboard range to 8" below and/or 7" above monitor surface. Tilt range is +15° to -15° tilt.

Control Switch: Standard with 3 position memory settings.

Modesty Panel: Optional 18 gauge perforated 10"H steel panel. Available in standard Mayline colors.

Base: Consists of 14 gauge legs and rigid 14 gauge cross brace. Available in black or silver only. Base ships KD. Due to the precision alignment of the height-adjustable legs, it is critical the unit is properly leveled for optimum performance.

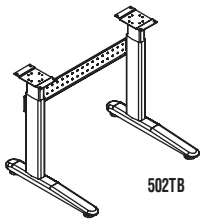
502TB

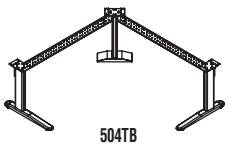
504TB

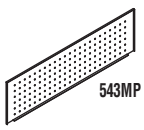
543MP

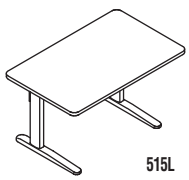
515L

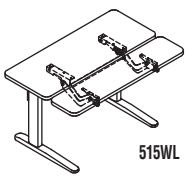
515WL

Model No.	Description	Wt.	
XR-Series	Base Only-includes columns, control box, cross brace, cables and switch		**Base Only List Price**
502STB	For 36"-42" 24"D surfaces - 2 columns	45#	$1990
503STB	For 48"-60" 24"D surfaces - 2 columns	47#	$2060
506STB	For 24" x 48" x 72" x 24" right-hand return - 3 columns	65#	$2694
507STB	For 24" x 72" x 48" x 24" left-hand return - 3 columns	65#	$2694
504STB	For 72" x 24" x 72" corner - 3 columns	68#	$2701
505STB	For 84" x 24" x 84" corner - 3 columns	73#	$2765
508STB	For 60" x 72" x 24" D surfaces - 2 columns	50#	$2060
509STB	For 72" x 84" x 24" D surfaces -2 columns	54#	$2130
502TB	For 36"-42" surfaces - 2 columns 30" Deep	47#	$2016
503TB	For 48"-60" surfaces - 2 columns 30" Deep	50#	$2088
508TB	For 60"-72" 30"D surfaces - 2 columns	53#	$2088
509TB	For 72"-84" 30"D surfaces - 2 columns	57#	$2161
506TB	For 30" x 48" x 72" x 30" right-hand return - 3 columns	67#	$2735
507TB	For 30" x 72" x 48" x 30" left-hand return - 3 columns	67#	$2735
504TB	For 72" x 30" x 72" corner - 3 columns	70#	$2741
505TB	For 84" x 30" x 84" corner - 3 columns	75#	$2807
Optional Modesty Panel			**List Price**
537MP	For 36"-42" wide tables (Qty 1)	20#	$125
543MP	For 48"-60" wide tables (Qty 1)	22#	$136
549MP	For 72" x 72" corner tables (Qty 2)	38#	$342
561MP	For 84" x 84" corner tables (Qty 2)	40#	$380
562MP	For 72" x 48" corner table (Qty 1 of each size)	40#	$308
XR-Series	Single Surface Rectangular		**HPL List Price**
505SL	36" x 24"	80#	$2302
510SL	42" x 24"	87#	$2343
515SL	48" x 24"	94#	$2409
520SL	60" x 24"	107#	$2544
525SL	72" x 24"	130#	$2596
505L	36" x 30"	89#	$2358
510L	42" x 30"	97#	$2400
515L	48" x 30"	105#	$2467
520L	60" x 30"	120#	$2602
525L	72" x 30"	135#	$2651
XR-Series	Dual Surface Rectangular with DataCenter Mechanism		**HPL List Price**
505WL	36" x 30"	110#	$3090
510WL	42" x 30"	119#	$3149
515WL	48" x 30"	131#	$3226
520WL	60" x 30"	147#	$3362

XR- SERIES (CONTINUED)

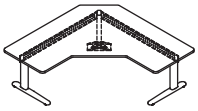

5300

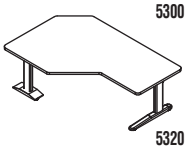

5320

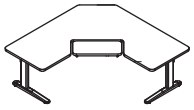

5300W

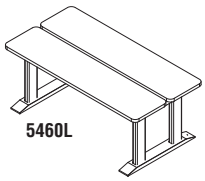

5460L

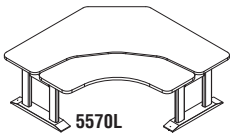

5570L

Model No.	Description	Wt.	HPL List Price
XR-Series	3 Column Laminate Single Surface Corner		
5300SL	24" x 72" x 72" x 24"	240#	$3806
5310SL	24" x 84" x 84" x 24"	242#	$4013
5320SL	24" x 48" x 72" x 24" - right handed	231#	$3299
5330SL	24" x 72" x 48" x 24" - left handed	231#	$3299
5300L	30" x 72" x 72" x 30"	253#	$3872
5310L	30" x 84" x 84" x 30"	258#	$4079
5320L	30" x 48" x 72" x 30" - right handed	239#	$3365
5330L	30" x 72" x 48" x 30" - left handed	239#	$3365
XR-Series	3 Column Laminate Single Surface Corner with Data Center Mechanism		
5300WL	30" x 72" x 72" x 30"	258#	$4620
5310WL	30" x 84" x 84" x 30"	285#	$4827
5320WL	30" x 48" x 72" x 30" - right handed	244#	$3993
5330WL	30" x 72" x 48" x 30" - left handed	244#	$3993
XR-Series	4 Column Laminate Dual Surface Rectangular		
5460L	32" x 60"	154#	$5175
5470L	32" x 72"	167#	$5275
XR-Series	5 Column Laminate Dual Surface Corner		
5560L	40" x 60" x 60" x 40"	195#	$7673
5570L	40" x 70" x 70" x 40"	250#	$7873

Note: DataCenter keyboard mechanisms are available for $761 list each. See below for more details.

Data Center Keyboard Mechanisms

Sit/Stand height adjustable keyboard arm with paddle actuated spring brake height adjustment and lever for tilt. Variable width configurations, fixed mount application. Available in 19", 26.25" widths. Please contact Customer Service for compatibility on rectangular and corner workstations to insure proper fit.

Model No.	Description	Wt.	List Price
49263	Data Center 19" (A)	22#	$761
49264	Data Center 26.25" (B)	22#	$761
49265	Data Center 30"-45" adjustable (C) in 98" or (25mm) increments	22#	$761

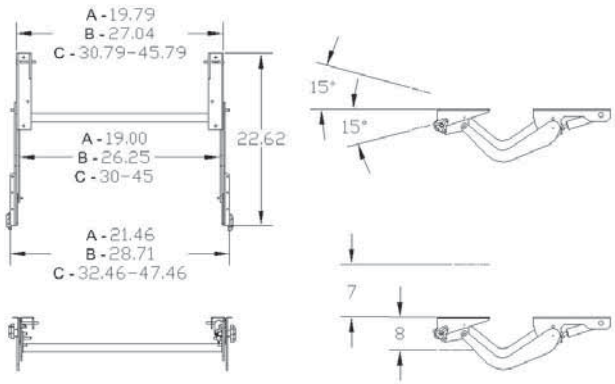

KEYBOARD SUPPORTS

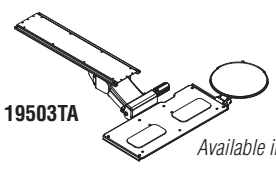

19503TA

Available in Black Only.

Model No.	Description	Wt.	List Price
19503TA	Combination keyboard/mouse platform 19"W x 8 1/4"D, 9"Dia. mouse platform	15#	$570

RGE ELECTRIC HEIGHT ADJUSTABLE TABLE

- **Drive System:** 24V 2-leg system has 250 lbs. lifting capacity and draws a maximum of 1.8 amps.
- **Adjustment Speed:** 1.6" per second.
- **Travel Range:** 25.7" of vertical adjustment from 22.6" to 48.3" (with worksurface) by way of simple to use up/down control switch.
- **Worksurfaces:** 1 1/8" high pressure laminate with 3mm PVC (square corners) is standard. Add a "T" suffix to the part number if T-mold is preferred (radiused corners).
- **Keyboard Surface:** Optional mechanism extends keyboard range to 8" below and/or 7" above monitor surface. Tilt range is +15˚ to -15˚ tilt.
- **Cable Management:** Clips provided to efficiently route cables.
- **Base:** Consists of 14 gauge legs and rigid 14 gauge cross brace. Available in Black and Silver only. Base ships KD. Due to the precision alignment of the height-adjustable legs, it is critical the unit is properly leveled for optimum performance.
- **Meets ADA standards.**

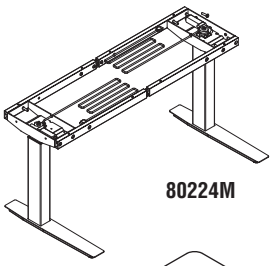

80224M

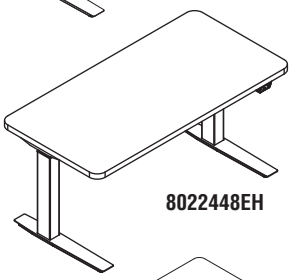

8022448EH

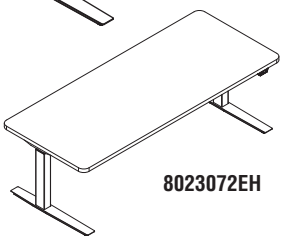

8023072EH

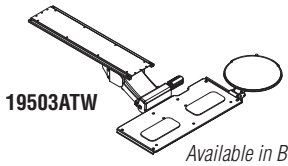

19503ATW

Available in Black Only.

Model No.	Description	Wt.	
RGE Electric HAT	Base Only-includes columns, control box, cross brace, cables and switch		**Base Only List Price**
80224M	2 Leg Base for 48" - 72" surfaces 24"D	65#	$1630
80230M	2 Leg Base for 48" - 72" surfaces 30"D	70#	$1670
RGE Electric HAT	Single Surface Rectangular		**HPL List Price Add "T" for Radiused T-Mold**
8022448EH	48" x 24"	105#	$1971
8022454EH	54" x 24"	110#	$2065
8022460EH	60" x 24"	115#	$2115
8022466EH	66" x 24"	120#	$2155
8022472EH	72" X 24"	125#	$2215
8023048EH	48" x 30"	120#	$2010
8023054EH	54" x 30"	125#	$2080
8023060EH	60" x 30"	130#	$2165
8023066EH	66" x 30"	135#	$2225
8023072EH	72" x 30"	140#	$2275
RGE Electric HAT	Combination keyboard/mouse platform		**List Price**
19503ATW	19"W x 8 1/4"D , 9" mouse platform	15#	$570

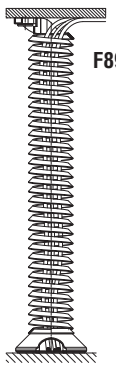

F890

MEETING PLUS™ TABLES

Made in USA

MEETING PLUS™ CONFERENCE/TRAINING TABLES

Updated table design built with durability and configurability in mind.

- Modesty panels with integrated extra-wide cable troughs.
- Tables can be connected together by using the optional ganging accessory
- All tables standard with one mobile leg and one stationary with levelers.
- Overall table height: 28 5/8".
- 250 lb. weight capacity, evenly distributed.
- Product shipped within one carton.
- Tables available in either Low Pressure Laminate with standard T-Mold or High Pressure Laminate with your choice of 3 edge treatments.
- HPL Edge Treatments: T-Mold (T), Knife-Edge (K), or Fluted (R) available in corporate edge colors.
- LPL table leg finishes available in Black. All corporate paint colors available for HPL table legs.
- Manufactured cutouts (5.25" x 3") for daisy chain electrical kits now available on 24"D & 30"D rectangular tables (one centered cutout per table grommet not included).
  Add "E" suffix and $30 list upcharge per cutout. See Training Tables Power Options page for surface mount kits.

Order Example M1848HK: M1848 = Base Model; H = HPL; K = Knife-Edge

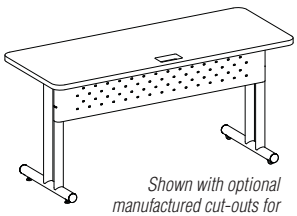

Shown with optional manufactured cut-outs for daisy chain electrical kits.

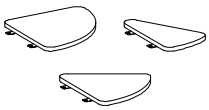

18" RECTANGULAR

Model No.	Dimensions	Wt.	LPL List Price "T" Suffix	HPL List Price "H" Suffix T-Mold List Price "T, K or R" Suffix
M1848	48"W x 18"D	74#	$731	$799
M1860	60"W x 18"D	87#	$786	$865
M1872	72"W x 18"D	97#	$905	$998

18" PIE CONNECTORS

Model No.	Dimensions	Wt.	LPL List Price "T" Suffix	HPL List Price "H" Suffix T-Mold List Price "T, K or R" Suffix
P3018	18" x 30° Pie	4#	$226	$253
P6018	18" x 60° Pie	8#	$238	$265
P9018	18" x 90° Pie	12#	$253	$280

24" RECTANGULAR

Model No.	Dimensions	Wt.	LPL List Price "T" Suffix	HPL List Price "H" Suffix T-Mold List Price "T, K or R" Suffix
M2448*	48"W x 24"D	80#	$786	$865
M2460*	60"W x 24"D	90#	$839	$933
M2472*	72"W x 24"D	103#	$960	$1066

* **NOTE:** Manufactured cutouts for daisy chain electrical kits available. Add "E" suffix and $30 List Upcharge per cutout. See Training Tables Power Options page for Surface Mount Kit options.

24" PIE CONNECTORS

Model No.	Dimensions	Wt.	LPL List Price "T" Suffix	HPL List Price "H" Suffix T-Mold List Price "T, K or R" Suffix
P3024	24" x 30° Pie	6#	$226	$253
P6024	24" x 60° Pie	12#	$238	$265
P9024	24" x 90° Pie	18#	$253	$280

24" CRESCENT/TRAPEZOID/TRANSITION

Model No.	Dimensions	Wt.	LPL List Price "T" Suffix	HPL List Price "H" Suffix T-Mold List Price "T, K or R" Suffix
MC24	66"W x 24"D Crescent (48"Radius)	80#	$839	$933
MT2454	54"W x 24"D Trapezoid	80#	$799	$879
M24	48"W x 24"D Transition	80#	$839	$933

30" RECTANGULAR

Model No.	Dimensions	Wt.	LPL List Price "T" Suffix	HPL List Price "H" Suffix T-Mold List Price "T, K or R" Suffix
M3048*	48"W x 30"D	86#	$839	$933
M3060*	60"W x 30"D	99#	$892	$998
M3072*	72"W x 30"D	109#	$1025	$1133

* **NOTE:** Manufactured cutouts for daisy chain electrical kits available. Add "E" suffix and $30 List Upcharge per cutout. See Training Tables Power Options page for Surface Mount Kit options.

MEETING PLUS™ CONFERENCE/TRAINING TABLES

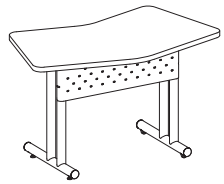

30" PIE CONNECTORS

Model No.	Dimensions	Wt.	LPL List Price "T" Suffix	HPL List Price "H" Suffix T-Mold List Price "T, K or R" Suffix
P3030	30" x 30° Pie	8#	$226	$253
P6030	30" x 60° Pie	16#	$238	$265
P9030	30" x 90° Pie	22#	$253	$280

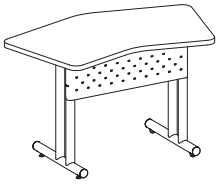

TRANSITION TABLES
(Surfaces can be installed in either direction)

Model No.	Dimensions	Wt.	LPL List Price "T" Suffix	HPL List Price "H" Suffix T-Mold List Price "T, K or R" Suffix
M18	36 1/2"W x 18"D	74#	$705	$799
M24	48"W x 24"D	80#	$839	$933
M30	59 1/2"W x 30"D	100#	$973	$1066

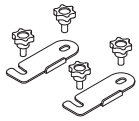

UNIVERSAL GANGING ACCESSORY – designed to connect two table edges together.

Model No.	Description	Wt.	List Price
10GA	Universal Ganging Accessory	1#	$52

MEETING PLUS IDEA STARTERS

- Must order by individual Model Numbers.

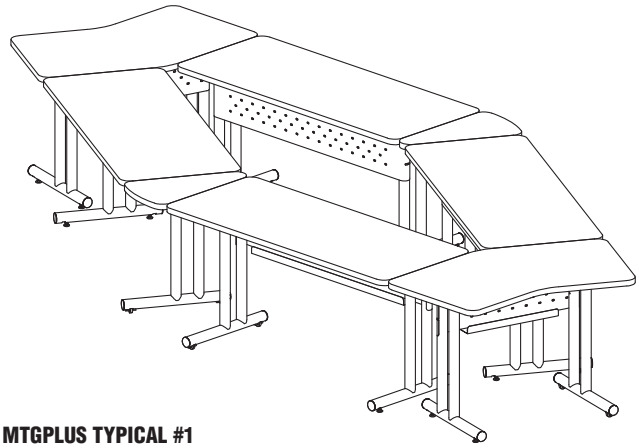

MTGPLUS TYPICAL #1

Consists of:

QTY.	MODEL NO.	DESCRIPTION	LIST PRICE EACH
4	**M2460HK**	Rect. Table, 24 x 60 w/Knife Edge T-Mold	$933
2	**M24HK**	Transition Table w/Knife Edge T-Mold	$933
2	**P3024HK**	30° Pie w/Knife Edge T-Mold	$253
4	**10GA**	Ganging Kit	$52

TOTAL: $6312

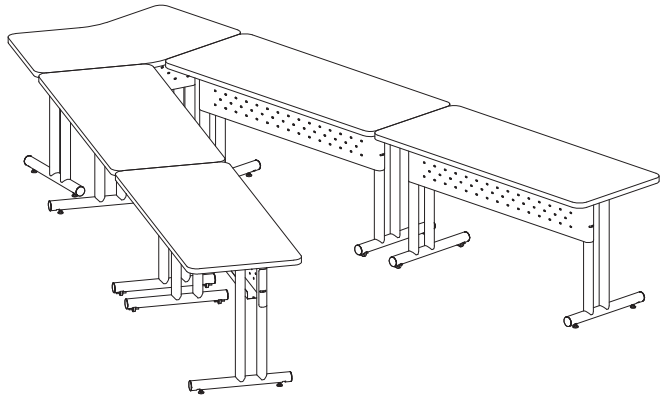

MTGPLUS TYPICAL #2

Consists of:

QTY.	MODEL NO.	DESCRIPTION	LIST PRICE EACH
4	**M2460HK**	Rect. Table, 24 x 60 w/Knife Edge T-Mold	$933
1	**M24HK**	Transition Table w/Knife Edge T-Mold	$933
4	**10GA**	Ganging Kit	$52

TOTAL: $4873

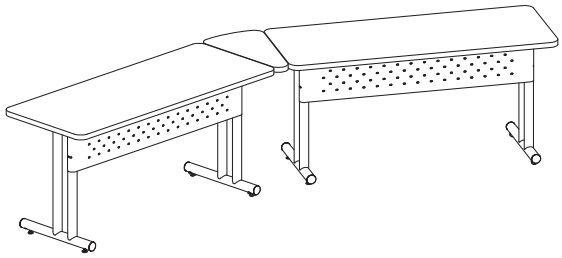

MTGPLUS TYPICAL #3

Consists of:

QTY.	MODEL NO.	DESCRIPTION	LIST PRICE EACH
2	**M2460HK**	Rect. Table, 24 x 60 w/Knife Edge T-Mold	$933
1	**P3024HK**	30° Pie w/Knife Edge T-Mold	$253

TOTAL: $2119

SYNC™ TABLES

SYNC TRAINING TABLES

- Silver Base only.
- Single-handed center control mechanism for convenient flip of the top.
- Minimal assembly required, installs in minutes.
- Tables straight-row nest for compact storage.
- Integrated modesty panel with built-in cable trough.
- Tables can be connected together by using ganging kit (included).
- Tables are shipped in two boxes.
- Overall table height: 29 1/2", four 3" locking casters.
- 6 1/8" between tables when nested.
- 150 lb. weight capacity, evenly distributed.
- Tables available with Silver frame, and tops in either Thermally Fused Laminate (LPL) with standard T-Mold or High Pressure Laminate (HPL) with your choice of (3) edge treatments.
- HPL T-Mold Edge Treatments: Standard T-Mold (T), Knife-Edge (K), or Fluted (R) available in corporate edge colors.
- Manufactured cutouts (5.25" x 3") for daisy chain electrical kits now available on 24"D & 30"D rectangular tables (one centered cutout per table. Grommet not included).
  Add "E" suffix and $30 list upcharge per cutout. See Training Tables Power Options page for surface mount kits.
- Ganging kit included.

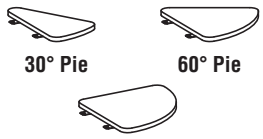

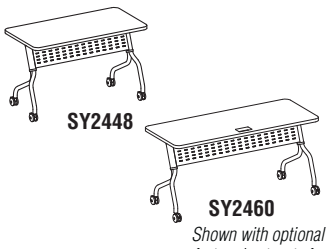

Shown with optional manufactured cut-outs for daisy chain electrical kits.

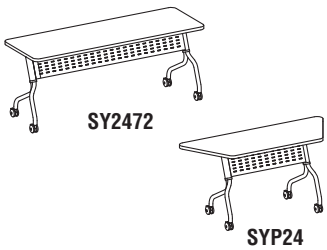

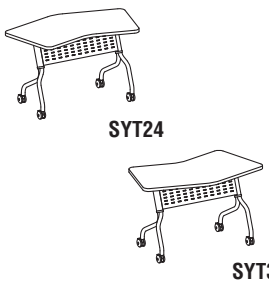

18" RECTANGULAR (Electrical kits not available on 18" tops).

Model No.	Description	Wt.	LPL List Price "T" Suffix	HPL List Price "H" Suffix T-Mold List Price "T, K or R" Suffix
SY1848	48" x 18" Rectangular	66#	$627	$686
SY1854	54" x 18" Rectangular	71#	$673	$724
SY1860	60" x 18" Rectangular	76#	$686	$759
SY1866	66" x 18" Rectangular	80#	$710	$776
SY1872	72" x 18" Rectangular	86#	$730	$806
18" PIE CONNECTORS				
P3018	18" x 30° Pie	4#	$226	$253
P6018	18" x 60° Pie	8#	$238	$265
P9018	18" x 90° Pie	12#	$253	$280
24" RECTANGULAR/CRESCENT/TRAPEZOID				
SY2448*	48" x 24" Rectangular	76#	$686	$759
SY2454*	54" x 24" Rectangular	82#	$731	$802
SY2460*	60" x 24" Rectangular	86#	$759	$837
SY2466*	66" x 24" Rectangular	92#	$788	$879
SY2472*	72" x 24" Rectangular	96#	$806	$896
SYC24	67"x 24" Crescent (48" Radius)	78#	$776	$853
SYP24	60" x 24" Trapezoid	78#	$776	$853

*** NOTE:** Manufactured cutouts for daisy chain electrical kits available. Add "E" suffix and $30 List Upcharge per cutout. See Training Tables Power Options page for Surface Mount Kit options.

24" PIE CONNECTORS				
P3024	24" x 30° Pie	6#	$226	$253
P6024	24" x 60° Pie	12#	$238	$265
P9024	24" x 90° Pie	18#	$253	$280
30" RECTANGULAR				
SY3048*	48" x 30" Rectangular	86#	$747	$837
SY3054*	54" x 30" Rectangular	93#	$783	$875
SY3060*	60" x 30" Rectangular	99#	$822	$911
SY3066*	66" x 30" Rectangular	105#	$850	$940
SY3072*	72" x 30" Rectangular	111#	$879	$969

*** NOTE:** Manufactured cutouts for daisy chain electrical kits available. Add "E" suffix and $30 List Upcharge per cutout. See Training Tables Power Options page for Surface Mount Kit options.

30" PIE CONNECTORS				
P3030	30" x 30° Pie	8#	$226	$253
P6030	30" x 60° Pie	16#	$238	$265
P9030	30" x 90° Pie	22#	$253	$280
TRANSITION TABLES				
SYT24	48"W x 24"D	78#	$823	$884
SYT30	60"W x 30"D	100#	$849	$909

SYNC™ TYPICALS (IDEA STARTERS ONLY)

- Must order by individual Model Numbers.

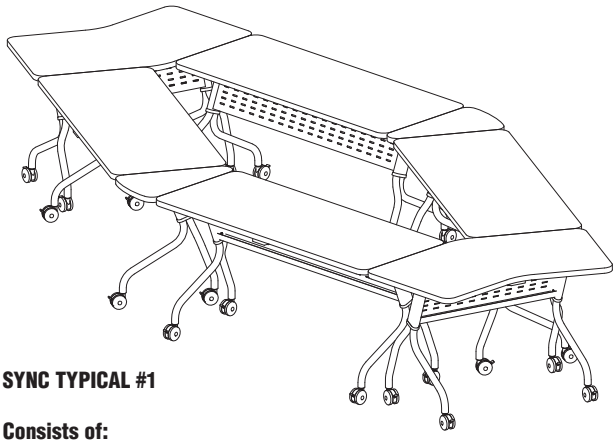

SYNC TYPICAL #1

Consists of:

QTY.	MODEL NO.	DESCRIPTION	LIST PRICE EACH
4	**SY2460T**	Rectangular Table, 24" x 60"	$759
2	**SYT24T**	24"D Transition Table	$823
2	**P3024T**	24" x 30° Pie	$226

TOTAL: $5134

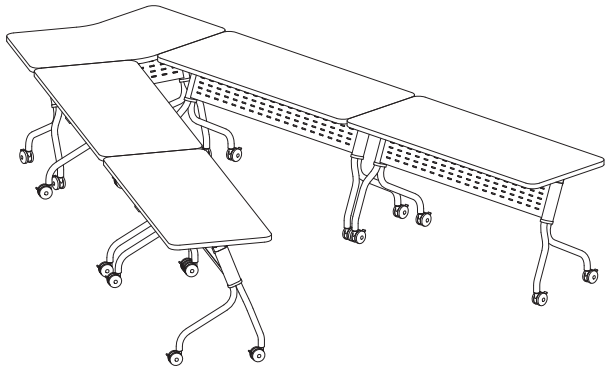

SYNC TYPICAL #2

Consists of:

QTY.	MODEL NO.	DESCRIPTION	LIST PRICE EACH
4	**SY2460T**	Rectangular Table, 24" x 60"	$759
1	**SYT24T**	24"D Transition Table	$823

TOTAL: $3859

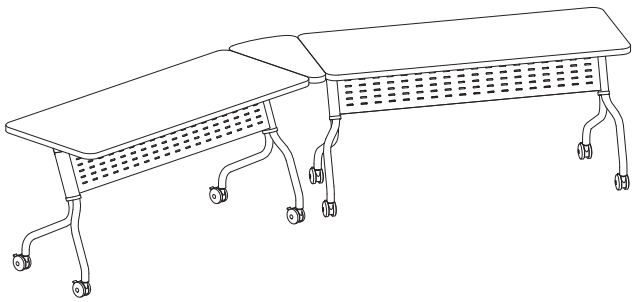

SYNC TYPICAL #3

Consists of:

QTY.	MODEL NO.	DESCRIPTION	LIST PRICE EACH
2	**SY2460T**	Rectangular Table, 24" x 60"	$759
1	**P3024T**	24" x 30° Pie	$226

TOTAL: $1744

FLIP-N-GO® TABLES

FLIP-N-GO TABLES

An excellent solution for your training or conference room needs.

- Black base only.
- Minimal assembly required.
- Dual-sided levers for a quick-flip of the top.
- Tables nest for compact storage.
- Integrated Modesty Panel with built-in cable trough.
- Tables can be connected together by using the included ganging accessory.
- Tables are shipped in two boxes, top and base separately.
- Overall HPL table height: 29".
- Four locking casters.
- 5 1/4" between tables when nested.
- 150 lb. weight capacity, evenly distributed.
- Tables can be connected together by using ganging kit (included).
- Tables available in either Thermally Fused Laminat (LPL) with standard T-Mold or High Pressure Laminate (HPL) with your choice of 3 edge treatments.
- HPL T-Mold Edge Treatments: Standard T-Mold (T), Knife-Edge (K), or Fluted (R) available in corporate edge colors.
- Manufactured cutouts (5.25" x 3") for daisy chain electrical kits now available on 24"D & 30"D rectangular tables (one centered cutout per table grommet not included).
  Add "E" suffix and $30 list upcharge per cutout. See Training Tables Power Options page for surface mount kits see page 229 electrical.

Order Example LF1848HK: LF1848 = Base Model; H = HPL; K = Knife-Edge

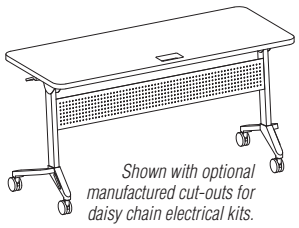

Shown with optional manufactured cut-outs for daisy chain electrical kits.

18" RECTANGULAR (Electrical kits not available on 18" tops).

Model No.	Dimensions	Wt.	LPL List Price "T" Suffix	HPL List Price "H" Suffix T-Mold List Price "T, K or R" Suffix
LF1848	48" x 18" Rectangular	66#	$570	$624
LF1860	60" x 18" Rectangular	76#	$624	$693
LF1872	72" x 18" Rectangular	86#	$666	$732

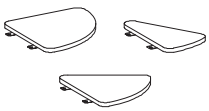

18" PIE CONNECTORS

Model No.	Dimensions	Wt.	LPL List Price "T" Suffix	HPL List Price "H" Suffix T-Mold List Price "T, K or R" Suffix
P3018	18" x 30° Pie	4#	$226	$253
P6018	18" x 60° Pie	8#	$238	$265
P9018	18" x 90° Pie	12#	$253	$280

24" RECTANGULAR/CRESCENT/TRAPEZOID

Model No.	Dimensions	Wt.	LPL List Price "T" Suffix	HPL List Price "H" Suffix T-Mold List Price "T, K or R" Suffix
LF2448*	48" x 24" Rectangular	76#	$624	$693
LF2460*	60" x 24" Rectangular	86#	$693	$759
LF2472*	72" x 24" Rectangular	96#	$732	$814
LC24	67" x 24" Crescent (48" Radius)	76#	$747	$814
LP24	60" x 24" Trapezoid	76#	$666	$720

*** NOTE:** Manufactured cutouts for daisy chain electrical kits available. Add "E" suffix and $30 List Upcharge per cutout. See Training Tables Power Options page for Surface Mount Kit options.

24" PIE CONNECTORS

Model No.	Dimensions	Wt.	LPL List Price "T" Suffix	HPL List Price "H" Suffix T-Mold List Price "T, K or R" Suffix
P3024	24" x 30° Pie	6#	$226	$253
P6024	24" x 60° Pie	12#	$238	$265
P9024	24" x 90° Pie	18#	$253	$280

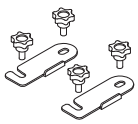

TRANSITION TABLES
(Surfaces can be installed in either direction)

Model No.	Dimensions	Wt.	LPL List Price "T" Suffix	HPL List Price "H" Suffix T-Mold List Price "T, K or R" Suffix
LT24	48"W x 24"D	76#	$748	$814

FLIP-N-GO TYPICALS (IDEA STARTERS ONLY)

- Must order by individual Model Numbers.

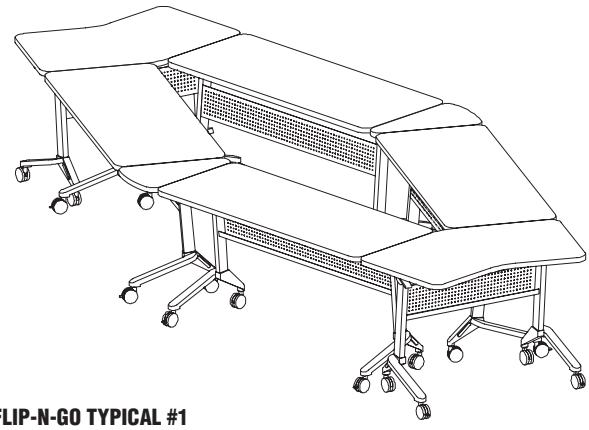

FLIP-N-GO TYPICAL #1

Consists of:

QTY.	MODEL NO.	DESCRIPTION	LIST PRICE EACH
4	**LF2460T**	Rect. Table, 24 x 60	$693
2	**LT24T**	24"D Transition Table	$748
2	**P3024T**	24" x 30° Pie	$226

TOTAL: $4720

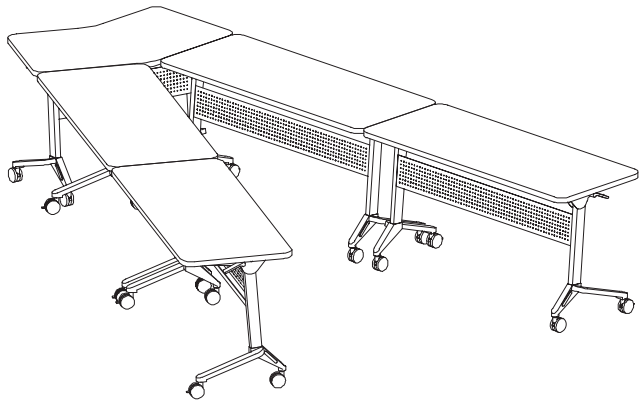

FLIP-N-GO TYPICAL #2

Consists of:

QTY.	MODEL NO.	DESCRIPTION	LIST PRICE EACH
4	**LF2460T**	Rect. Table, 24 x 60	$693
1	**LT24T**	24"D Transition Table	$748

TOTAL: $3520

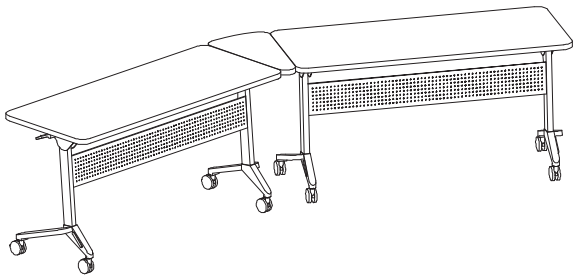

FLIP-N-GO TYPICAL #3

Consists of:

QTY.	MODEL NO.	DESCRIPTION	LIST PRICE EACH
2	**LF2460T**	Rect. Table, 24" x 60"	$693
1	**P3024T**	24" x 30° Pie	$226

TOTAL: $1612

T-MATE™ TABLES

Made in USA

T-MATE TABLES

Shared-leg design saves cost and provides more knee space.

- Starter Tables supplied with two legs for freestanding applications.
- Adder Tables supplied with one leg. Any shared leg configuration requires one Starter Table and all remaining tables can be Adders.
- Tables can be connected together by using the optional ganging accessory (not available for 18").
- Overall table height: 29".
- 100 lb. weight capacity on Starter Tables, weight evenly distributed.
- Optional Modesty Panel, with built-in cable trough (2.8" depth), can be added to any tabletop.
- Tables available in either Low Pressure Laminate with standard T-Mold or High Pressure Laminate with your choice of 3 edge treatments.
- HPL T-Mold Edge Treatments: Standard T-Mold (T), Knife-Edge (K), or Fluted (R) available in corporate edge colors.
- LPL table leg finishes available in Black. All corporate paint colors available for HPL table legs.
- Manufactured cutouts (5.25" x 3") for daisy chain electrical kits now available on 24"D & 30"D rectangular tables (one centered cutout per table grommet not included).
  Add "E" suffix and $30 list upcharge per cutout. See Training Tables Power Options page for surface mount kits see page 229 electrical.

NOTE: These tables are designed for static use applications only. They are not designed to be slid and/or dragged across any floor surface.
For applications requiring mobility, please refer to one of our many mobile training table options.

Order Example PRS4818HK: PRS4818 = Base Model; H = HPL; K = Knife-Edge

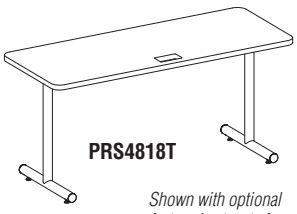

PRS4818T

Shown with optional manufactured cut-outs for daisy chain electrical kits.

18" RECTANGULAR

Model No.	Dimensions	Wt.	LPL List Price "T" Suffix	HPL List Price "H" Suffix T-Mold List Price "T, K or R" Suffix
PRS4818	Starter, 48" x 18" Rectangular	40#	$542	$597
PRA4818	Adder, 48" x 18" Rectangular	32#	$365	$408
PRS6018	Starter, 60" x 18" Rectangular	50#	$542	$610
PRA6018	Adder, 60" x 18" Rectangular	42#	$392	$435
PRS7218	Starter, 72" x 18" Rectangular	60#	$583	$638
PRA7218	Adder, 72" x 18" Rectangular	52#	$461	$515

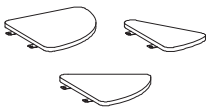

PIE CONNECTORS

18" PIE CONNECTORS

Model No.	Dimensions	Wt.	LPL List Price "T" Suffix	HPL List Price "H" Suffix T-Mold List Price "T, K or R" Suffix
P3018	18" x 30° Pie	4#	$226	$253
P6018	18" x 60° Pie	8#	$238	$265
P9018	18" x 90° Pie	12#	$253	$280

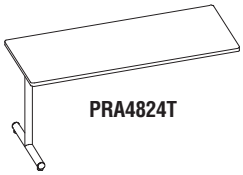

PRA4824T

24" RECTANGULAR

Model No.	Dimensions	Wt.	LPL List Price "T" Suffix	HPL List Price "H" Suffix T-Mold List Price "T, K or R" Suffix
PRS4824*	Starter, 48" x 24" Rectangular	50#	$597	$666
PRA4824*	Adder, 48" x 24" Rectangular	42#	$435	$474
PRS6024*	Starter, 60" x 24" Rectangular	60#	$610	$678
PRA6024*	Adder, 60" x 24" Rectangular	52#	$461	$501
PRS7224*	Starter, 72" x 24" Rectangular	70#	$638	$701
PRA7224*	Adder, 72" x 24" Rectangular	62#	$528	$583

*** NOTE:** Manufactured cutouts for daisy chain electrical kits available. Add "E" suffix and $30 List Upcharge per cutout. See Training Tables Power Options page for Surface Mount Kit options.

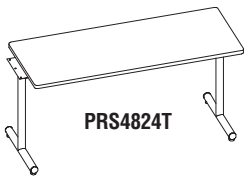

PRS4824T

24" PIE CONNECTORS

Model No.	Dimensions	Wt.	LPL List Price "T" Suffix	HPL List Price "H" Suffix T-Mold List Price "T, K or R" Suffix
P3024	24" x 30° Pie	6#	$226	$253
P6024	24" x 60° Pie	12#	$238	$265
P9024	24" x 90° Pie	18#	$253	$280

30" RECTANGULAR

Model No.	Dimensions	Wt.	LPL List Price "T" Suffix	HPL List Price "H" Suffix T-Mold List Price "T, K or R" Suffix
PRS4830*	Starter, 48" x 30" Rectangular	60#	$610	$678
PRA4830*	Adder, 48" x 30" Rectangular	52#	$446	$501
PRS6030*	Starter, 60" x 30" Rectangular	70#	$651	$720
PRA6030*	Adder, 60" x 30" Rectangular	62#	$488	$542
PRS7230*	Starter, 72" x 30" Rectangular	80#	$666	$732
PRA7230*	Adder, 72" x 30" Rectangular	72#	$542	$597

*** NOTE:** Manufactured cutouts for daisy chain electrical kits available. Add "E" suffix and $30 List Upcharge per cutout. See Training Tables Power Options page for Surface Mount Kit options.

30" PIE CONNECTORS

Model No.	Dimensions	Wt.	LPL List Price "T" Suffix	HPL List Price "H" Suffix T-Mold List Price "T, K or R" Suffix
P3030	30" x 30° Pie	8#	$226	$253
P6030	30" x 60° Pie	16#	$238	$265
P9030	30" x 90° Pie	22#	$253	$280

T-MATE TABLES

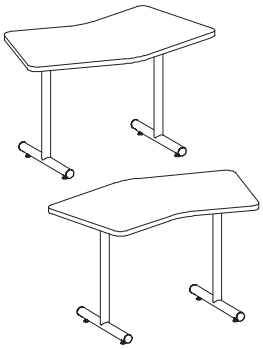

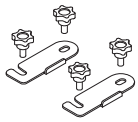

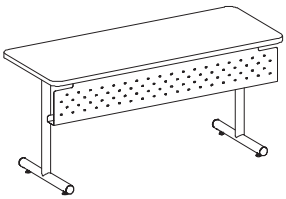

TRANSITION TABLES

Model No.	Dimensions	Wt.	LPL List Price "T" Suffix	HPL List Price "H" Suffix T-Mold List Price "T, K or R" Suffix
PTS18	Starter, 36 1/2"W x 18"D	40#	$542	$597
PTA18	Adder, 36 1/2"W x 18"D	32#	$338	$408
PTS24	Starter, 48"W x 24"D	50#	$610	$666
PTA24	Adder, 48"W x 24"D	42#	$542	$597
PTS30	Starter, 59 1/2"W x 30"D	60#	$705	$747
PTA30	Adder, 59 1/2"W x 30"D	52#	$638	$678

UNIVERSAL GANGING ACCESSORY – designed to connect two table edges together.

Model No.	Description	Wt.	List Price
10GA	Universal Ganging Accessory	1#	$52

* Ganging Accessory not available for 18" tables.

OPTIONAL STEEL MODESTY PANEL

Model No.	Description	List Price
MOD48	For 48" Rectangular Table & 30" Transition Table	$216
MOD60	For 60" Rectangular Table	$229
MOD72	For 72" Rectangular Table	$257
MODTT	For 24" Transition Table	$243

T-MATE TYPICALS (IDEA STARTERS ONLY)

- Must order by individual Model Numbers.

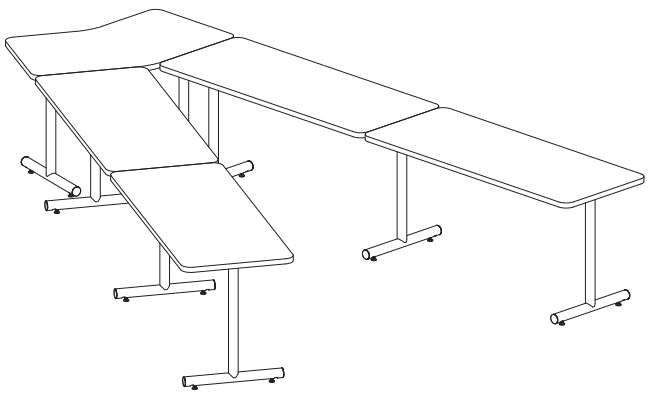

T-MATE LPL TYPICAL #2

Consists of:

QTY.	MODEL NO.	DESCRIPTION	LIST PRICE EACH
2	**PRS6024T**	Starter, 60" x 24" Rectangular	$610
2	**PRA6024T**	Adder, 60" x 24" Rectangular	$461
1	**PTS24T**	Starter, 24" Transition	$610
2	**10GA**	Ganging Kit	$52

TOTAL: $2856

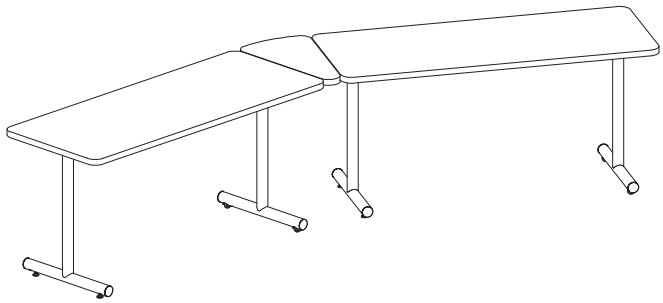

T-MATE LPL TYPICAL #3

Consists of:

QTY.	MODEL NO.	DESCRIPTION	LIST PRICE EACH
2	**PRS6024T**	Starter, 60" x 24" Rectangular	$610
1	**P3024T**	24" x 30° Pie	$226

TOTAL: $1446

TRAINING TABLE POWER OPTIONS

- UL Listed Components
- Non-sequential connections
- Convenient kits provide easy specifying
- Electrical kits not available for 18" Flip-N-Go or Sync
- Electrical Kits may interfere with the Flip-N-Go nesting feature.
- See Power Infeed Option section for limitations of number of linked tables.
- It is the customer's responsibility to ensure that the use of electrical systems, including the number of receptacles on a given circuit and connection to a building power source, be in compliance with all electrical codes.

POWER INFEED OPTIONS

NOTE: Power Infeed Option must be added to the first table in a run.

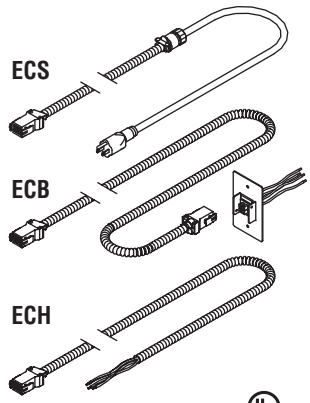

Model No.	Description	List Price
ECS	72" Corded Starter Limit 10 tables linked	$267
ECB	Quick Disconnect block & 72" cable with black wrap Limit 20 tables linked	$255
ECH	Hardwire Infeed, 72" w/black wrap Limit 20 tables linked	$173

UNDERSURFACE KITS

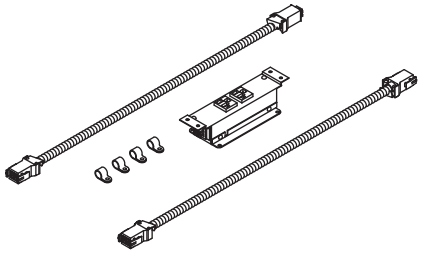

Model No.	Description	List Price
EC48UB	48" Table Kit – Block consisting of 2 power receptacles, 2 interconnecting table cables, 4 cable clamps	$408
EC54UB	54" Table Kit – Block consisting of 2 power receptacles, 2 interconnecting table cables, 4 cable clamps	$408
EC60UB	60" Table Kit – Block consisting of 2 power receptacles, 2 interconnecting table cables, 4 cable clamps	$408
EC66UB	66" Table Kit – Block consisting of 2 power receptacles, 2 interconnecting table cables, 4 cable clamps	$408
EC72UB	72" Table Kit – Block consisting of 2 power receptacles, 2 interconnecting table cables, 4 cable clamps	$408

SURFACE MOUNT KITS

- Manufactured cutouts now standard on select training tables. Applies to select Meeting Plus, Sync, Flip-N-Go and T-Mate tables.
- Grommet holes can also be field installed – 5 1/4" x 3" cutout in worksurface required.

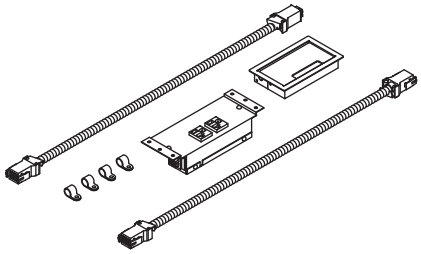

Model No.	Description	List Price
EC48FB	48" Table Kit – Black – Black Flush Grommet, base with 2 power receptacles, 2 interconnecting cables, 4 cable clamps	$542
EC48FS	48" Table Kit – Silver – Silver Flush Grommet, base with 2 power receptacles, 2 interconnecting cables, 4 cable clamps	$542
EC54FB	54" Table Kit – Black – Black Flush Grommet, base with 2 power receptacles, 2 interconnecting cables, 4 cable clamps	$542
EC54FS	54" Table Kit – Silver – Silver Flush Grommet, base with 2 power receptacles, 2 interconnecting cables, 4 cable clamps	$542
EC60FB	60" Table Kit – Black – Black Flush Grommet, base with 2 power receptacles, 2 interconnecting cables, 4 cable clamps	$542
EC60FS	60" Table Kit – Silver – Silver Flush Grommet, base with 2 power receptacles, 2 interconnecting cables, 4 cable clamps	$542
EC66FB	66" Table Kit – Black – Black Flush Grommet, base with 2 power receptacles, 2 interconnecting cables, 4 cable clamps	$542
EC66FS	66" Table Kit - Silver – Silver Flush Grommet, base with 2 power receptacles, 2 interconnecting cables, 4 cable clamps	$542
EC72FB	72" Table Kit – Black – Black Flush Grommet, base with 2 power receptacles, 2 interconnecting cables, 4 cable clamps	$542
EC72FS	72" Table Kit - Silver – Silver Flush Grommet, base with 2 power receptacles, 2 interconnecting cables, 4 cable clamps	$542

EXTENSION OPTION

ECX

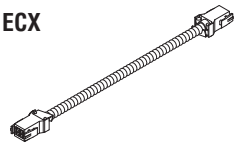

Model No.	Description	List Price
ECX	12" Extension Cable	$93
ECG	Grommet Cover (5.69 x 3.38)	$99

TRANSACTION™
CONFERENCE TABLES

GIZA/CAP Intertek GSA

TransAction's great style and smart design is perfect for today's multi-media conference rooms. Full size tables in three shapes in over 600 high-pressure laminates (HPL)s to complete your high-tech conference room. A full technology trough and surface opening with floating acrylic cover allow the power and data required for today's tech intensive meetings to be easily accessible yet concealed.

- Three shapes of conference surfaces: Boat-shaped, Rectangular, Racetrack
- Stylish heavy steel base and leg panels available in Mayline Corporate colors with leg inserts to match the table surface laminate or veneer.
- Tops constructed of 1 1/8" thick high-pressure laminate (HPL) with knife-edge T-mold. Biltmore Cherry and Witchcraft laminates match Aberdeen Conference Accessories.
- 8' and 10' tables have two starter legs with one trough opening/cover; 12' table has two starter legs, one adder support leg and two trough openings/covers. Additional support leg and trough opening/cover per 6' section.
- All tables 29.5" in height.
- Power and data components ordered separately.

BASIC TABLES – HPL – No technology trough or opening. **Preconfigured Power Kits CANNOT be installed.**

Model No.	Description		Weight	Suggested Seating Capacity	List Price
TAC8BB	96" x 42"	Boat-Shaped	229#	6-8	$3184
TAC8BR	96" x 42"	Rectangular	229#	6-8	$3184
TAC8BT	96" x 42"	Racetrack	229#	6-8	$3184
TAC10BB	120" x 48"	Boat-Shaped	311#	8-10	$3979
TAC10BR	120" x 48"	Rectangular	311#	8-10	$3979
TAC10BT	120" x 48"	Racetrack	311#	8-10	$3979
TAC12BB	144" x 54"	Boat-Shaped	400#	10-12	$5319
TAC12BR	144" x 54"	Rectangular	400#	10-12	$5319
TAC12BT	144" x 54"	Racetrack	400#	10-12	$5319
TAC18BB	216" x 54"	Boat-Shaped	591#	14-16	$7626
TAC18BR	216" x 54"	Rectangular	591#	14-16	$7626
TAC18BT	216" x 54"	Racetrack	591#	14-16	$7626
TAC24BB	288" x 54"	Boat-Shaped	782#	16-20	$9934
TAC24BR	288" x 54"	Rectangular	782#	16-20	$9934
TAC24BT	288" x 54"	Racetrack	782#	16-20	$9934
TAC6BA	72" x 54"	Complete Adder – Applicable to any shape top	191#	2-4	$2307

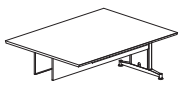
TAC6BA

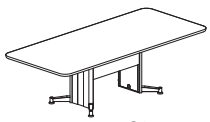
TAC8BR

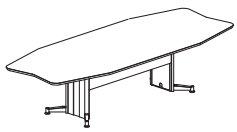
TAC10BB

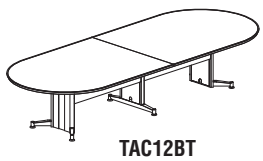
TAC12BT

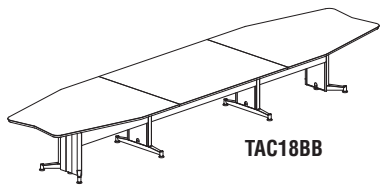
TAC18BB

TRANSACTION™ SERIES CONFERENCE TABLES

- Technology intensive tables include under table trough and surface opening with acrylic cover.
- 8' and 10' tables have two starter legs with trough opening/cover, 12' tables have two starter legs, one adder support leg and two trough openings / covers. Additional support leg and trough opening/per section.

TECHNOLOGY INTENSIVE HPL TABLES

Model No.	Description		Weight	Suggested Seating Capacity	List Price
TAC8TB	96" x 42"	Boat-Shaped	229#	6-8	$4489
TAC8TR	96" x 42"	Rectangular	229#	6-8	$4489
TAC8TT	96" x 42"	Racetrack	229#	6-8	$4489
TAC10TB	120" x 48"	Boat-Shaped	311#	8-10	$5616
TAC10TR	120" x 48"	Rectangular	311#	8-10	$5616
TAC10TT	120" x 48"	Racetrack	311#	8-10	$5616
TAC12TB	144" x 54"	Boat-Shaped	440#	10-12	$8041
TAC12TR	144" x 54"	Rectangular	440#	10-12	$8041
TAC12TT	144" x 54"	Racetrack	440#	10-12	$8041
TAC18TB	216" x 54"	Boat-Shaped	669#	14-16	$11161
TAC18TR	216" x 54"	Rectangular	669#	14-16	$11161
TAC18TT	216" x 54"	Racetrack	669#	14-16	$11161
TAC24TB	288" x 54"	Boat-Shaped	898#	16-20	$14096
TAC24TR	288" x 54"	Rectangular	898#	16-20	$14096
TAC24TT	288" x 54"	Racetrack	898#	16-20	$14096
TAC6TA	72" x 54"	Complete Adder – Applicable to any shape top	229#	2-4	$3119

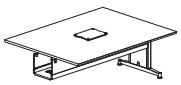
TAC6TA

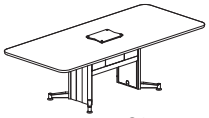
TAC8TR

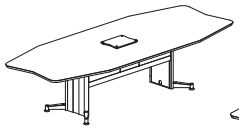
TAC10TB

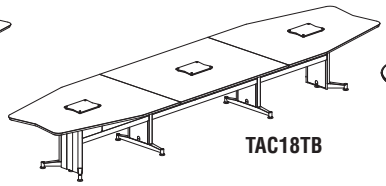
TAC18TB

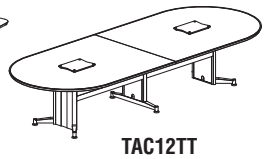
TAC12TT

TRANSACTION™ MEDIA TABLES

TransAction's boat-shaped Media Table offers a perfect solution for collaborative meetings requiring data and power connectivity and flexibility.

- Boat-shaped table available in Standing Height 42" or Sitting Height 29 1/2".
- Models available with or without power and data package.
- Optional power and data package includes:
  - 1–Single technology well power kit – single circuit
  - 3–Telecom plates – RJ11 CAT3 Phone and RJ45 CAT6 Data, USB, USB & 15 Pin-HD VGA F/F
  - 1–Plug-in power cord infeed 72" long – single circuit
- Other telecom plate options available as well as hardwire infeed. Call Ext. 222 in Customer Service for assistance.
- Contemporary styling, durable construction at an affordable price.
- Heavy-gauge steel table frames.
- Available in all Mayline high-pressure laminate surfaces.
- Biltmore Cherry and Witchcraft laminates match Aberdeen Conference Accessories.
- Limited Lifetime Warranty.

Model No.	Description	Wt.	List Price
TAMST6	54"W x 72"L x 42"H Standing Height Table	254#	$4461
TAMSTE6	54"W x 72"L x 42"H Standing Height Table w/ power and data package	269#	$5551
TAMT6	54"W x 72"L x 29 1/2"H Sitting Height Table	229#	$4056
TAMTE6	54"W x 72"L x 29 1/2"H Sitting Height Table w/ power and data package	244#	$5146

TransAction Media Table shown with Aberdeen Conference Accessories.

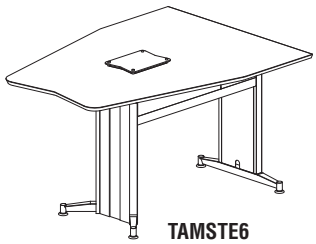

TAMSTE6

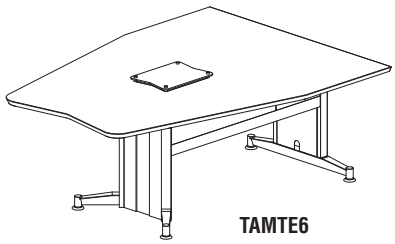

TAMTE6

TRANSACTION™

CONFERENCE TABLE POWER/TELECOM OPTIONS

- UL Recognized and CSA Certified Components.
- Convenient kits provide easy specifying.
- Ten Telecom Plate Options sold individually; others available upon request.
- Power and Telecom Plates are installed in trough panel.
- Additional options available upon special request to meet your requirements.
- Kits must be used with Mayline Hardwire Starter Cable.
- **Power Kits CANNOT be installed into Basic TransAction Conference Tables.**
- It is the customer's responsibility to ensure that the use of electrical systems, including the number of receptacles on a given circuit, and connection to building power source, be in compliance with all electrical codes.

POWER INFEED OPTIONS

- All circuits rated for 20 AMPS and are energized; includes female connector, length of flex cable and box connector.
- Up to 10 power blocks can be linked per hardwire cable.

Model No.	Description	List Price
TAESC72	72" Hardwire Starter Cable	$186
TAESC108	108" Hardwire Starter Cable	$240
TAESC144	144" Hardwire Starter Cable	$294

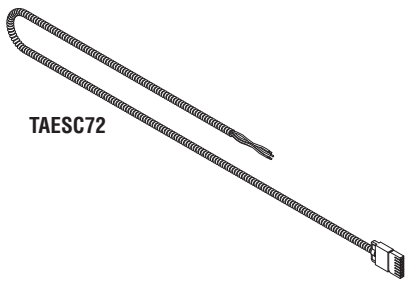

TAESC72

PRECONFIGURED CONFERENCE POWER KITS

Model No.	Description	List Price
TAECT1	Single Technology Well Kit - for Single Well 8' and 10' Technology Conference Tables. (2) Double sided power block with circuit 1, 2 and IG receptacles on each side, (2) mounting bracket for block, (1) 24" 8 wire 4 circuit interconnecting cable.	$445
TAECT2	Dual Technology Well Kit - for 12' Dual Well Technology Conference Tables or larger. (4) Double sided power block with circuit 1, 2 and IG receptacles on each side, (2) mounting bracket for block, (2) 26" 8 wire 4 circuit interconnecting cable, (1) 68" 8 wire 4 circuit interconnecting cable, (1) simplex removal tool.	$1066
TAECT3	6' Adder Conference Table Kit - add one Kit for each 6' Adder plus one TAECT2. (2) Double sided power block with circuit 1, 2 and IG receptacles on each side, (2) mounting bracket for block, (1) 26" 8 wire 4 circuit interconnecting cable, (1) 68" 8 wire 4 circuit interconnecting cable. (For example: a TAC24TB will require one TAECT2 Kit and two TAECT3 Kits.)	$623

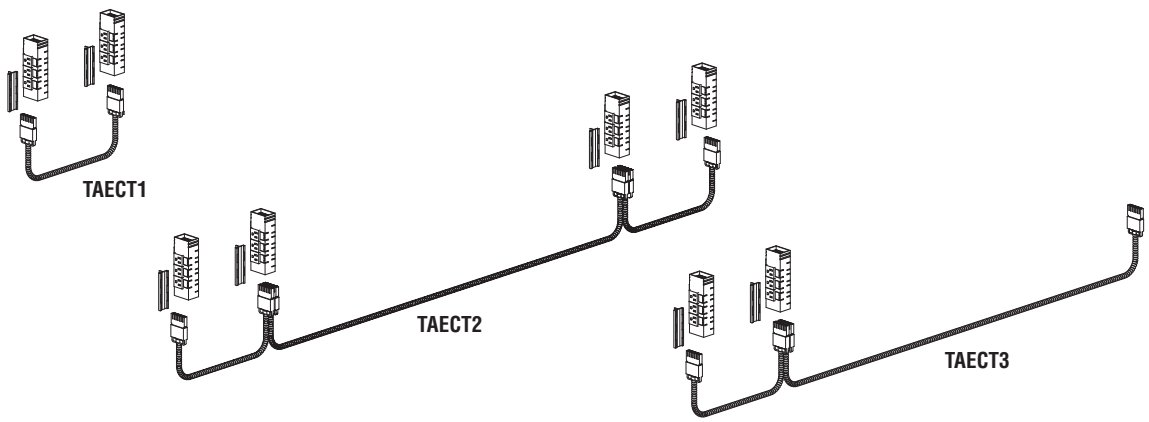

TAECT1

TAECT2

TAECT3

INDIVIDUAL TELECOM PLATE OPTIONS

- Ten commonly used telecom connections are offered to complete the technology requirements of TransAction conference tables and TransAction desking data channels.
- Two (48" channel) and three (60" and 72" channel) openings per side of data channel.
- Black only.
- Common Telecom Definitions:
  HDMI (High Definition Multi-Media Interface) – Used to stream video on devices such as televisions or Blu-Ray DVD players.
  15 pin HD VGA F/F (High Definition Video Graphics Array) – Used to stream video usually found on a laptop or projector.
  Mini Stereo Inline Audio Connection (also called a 1/8" phone jack or headphone jack) – Runs audio from computers and mp3 players.
  USB (Universal Serial Bus) – Connects computer peripherals such as mouse or keyboard to a computer.
- **Additional options available upon request.**

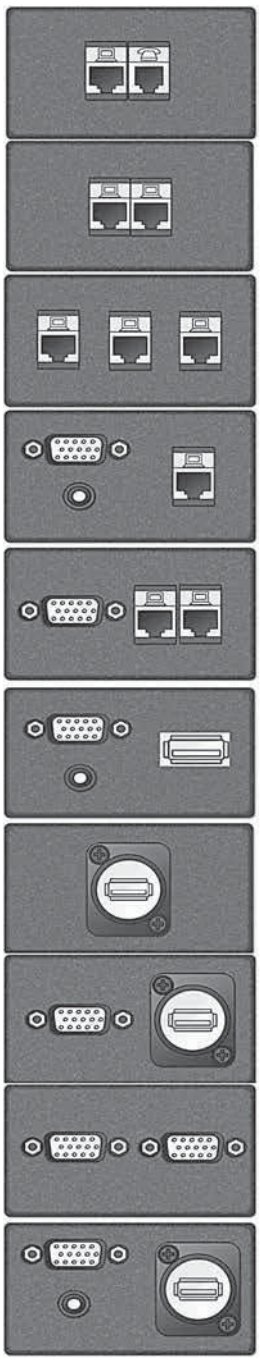

Model No.	Description	List Price
TAETP1	Telecom Plate with RJ11Cat3 Phone and RJ45 CAT6 Data	$119
TAETP2	Telecom Plate with 2 RJ45 Cat6 Data	$157
TAETP3	Telecom Plate with 3 RJ45 Cat6 Data	$230
TAETP4	Telecom Plate with RJ45 Cat6 Data, Mini Stereo Inline, and 15 Pin HD, VGA F/F	$260
TAETP5	Telecom Plate with 2 RJ45 Cat6 Data and 15 :in HD VGA F/F	$283
TAETP6	Telecom Plate with 1 HDMI F/F, 1 Mini Stereo Inline and 1 15 Pin, HD VGA F/F	$346
TAETP7	Telecom Plate with USB Inline	$67
TAETP8	Telecom Plate with USB Inline and 15 Pin HD VGA F/F	$193
TAETP9	Telecom Plate with 2 - 15 Pin HD VGA F/F	$263
TAETP10	Telecom Plate with USB Inline, 15 Pin HD VGA F/F, and Mini Stereo Inline	$243

RANGER® TEAM TABLES

Mayline's Ranger Table is the perfect solution for project or other team meetings. The Ranger Team Table has the same great strength and quality as our standard Ranger drafting table which is the result of over 70 years of experience in the drafting industry. A variety of storage under the standing height table can house project or meeting materials.

- Rectangular shape 36"D x 96"W x 42"H.
- Heavy-duty steel base provides strength and stability and is available as standard in Mayline Corporate colors.
- High pressure laminate top with 3mm edge banding.
- All Mayline Corporate color HPLs available from Wilsonart, Nevamar,Pionite, and Formica.
- Custom colors for storage or table elements available upon request with an extended lead time. Please call Customer Service for a quotation.

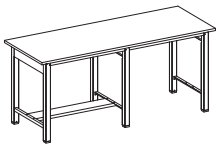

Model No.	Description	Wt.	List Price
7760	36"D x 96"W x 42"H Ranger Base Standing Height Table Interior Frame Dimensions 23"D x 41 1/4"W per Leg Section (85 1/2"W overall) x 39"H	170#	$2239

The Ranger Team Table can be used with Mayline Plan Files, Lateral Files and Bookcases to store a variety of team and project materials. Refer to interior table dimensions to verify how many units will fit beneath the table. Please contact Customer Service with questions.

RANGER TEAM TYPICALS

- Must order by individual Model Numbers.

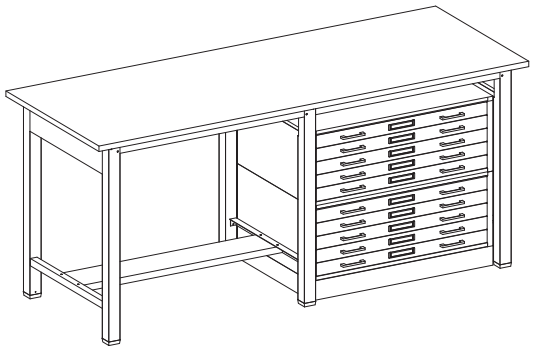

***RANGER TEAM TYPICAL #1** – Any combination of Interlocking Files can be used – 7 1/2" Drawers, 5-Drawer and 10-Drawer models as seen in the Price List page 323.

Consists of:

QTY.	MODEL NO.	DESCRIPTION	LIST PRICE EACH
1	**7760**	Team Table	$2239
1	**7767U**	Steel Cap	$535
1	**7767W**	Flush Base	$369
2	**7767**	5-Drawer Files*	$2315

RTT1 **TOTAL: $7774**

CSII™ CONFERENCE TABLES

CSII CONFERENCE TABLES

Full-size conference tables with optional power and data modules designed for optional power and data access to operate computers and presentation equipment during meetings.

- Three shapes of conference surfaces: Racetrack, Boat, and Rectangular.
- All tables are 29"H overall.
- Table legs are constructed of 14 gauge steel and available in Mayline's standard black finish.
- Tops constructed of 1 1/8" thick high pressure laminate with t-mold edge.
- Tables can be ordered with black grommets.
- If ordering optional power module, table must be ordered with grommets.
- Slimline legs are 7"W and Premier legs are 13"W. Both have integrated cable channels within table legs.
- All tables standard with two legs, except for 120" with three legs.
- **Base Finish:** List prices shown are for black base finish. The bases can be finished in any other standard finish for a $50 list upcharge. Add a "C" suffix after the model number and specify standard finish.
- **Work surfaces available in the six e5 colors; see box on page 50 for details.**

Model No.	Description	Slimline Leg Grommets (+S) List Price	Slimline Leg No Grommets (+SN) List Price	Premier Leg Grommets (+P) List Price	Premier Leg No Grommets (+PN) List Price
R73R	72" x 36" Rectangular	$1298	$1203	$1392	$1354
R73B	72" x 36" Boat-Shaped	$1298	$1203	$1392	$1354
R73V	72" x 36" Racetrack	$1298	$1203	$1392	$1354
R84R	84" x 42" Rectangular	$1464	$1428	$1518	$1482
R84B	84" x 42" Boat-Shaped	$1464	$1428	$1518	$1482
R84V	84" x 42" Racetrack	$1464	$1428	$1518	$1482
R94R	96" x 48" Rectangular	$1500	$1464	$1555	$1519
R94B	96" x 48" Boat-Shaped	$1500	$1464	$1555	$1519
R94V	96" x 48" Racetrack	$1500	$1464	$1555	$1519
R95R	96" x 54" Rectangular	$1537	$1500	$1595	$1556
R95B	96" x 54" Boat-Shaped	$1537	$1500	$1595	$1556
R95V	96" x 54" Racetrack	$1537	$1500	$1595	$1556
R104R	108" x 48" Rectangular	$1710	$1674	$1785	$1746
R104B	108" x 48" Boat-Shaped	$1710	$1674	$1785	$1746
R104V	108" x 48" Racetrack	$1710	$1674	$1785	$1746
R105R	108" x 54" Rectangular	$1845	$1810	$1919	$1883
R105B	108" x 54" Boat-Shaped	$1845	$1810	$1919	$1883
R105V	108" x 54" Racetrack	$1845	$1810	$1919	$1883
R124R	120" x 48" Rectangular	$1977	$1939	$2050	$2013
R124B	120" x 48" Boat-Shaped	$1977	$1939	$2050	$2013
R124V	120" x 48" Racetrack	$1977	$1939	$2050	$2013
R125R	120" x 54" Rectangular	$2086	$2050	$2159	$2124
R125B	120" x 54" Boat-Shaped	$2086	$2050	$2159	$2124
R125V	120" x 54" Racetrack	$2086	$2050	$2159	$2124

Model No.	Description	List Price
SPM	Optional Power Module [includes RJII-Cat 3 coupler (phone) and RJ45-Cat3 coupler (data)] – 6' power cord.	$284

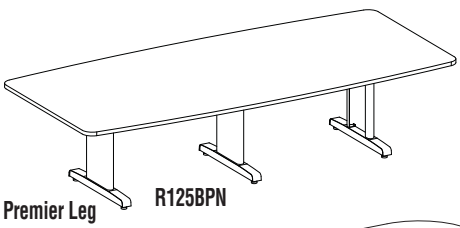

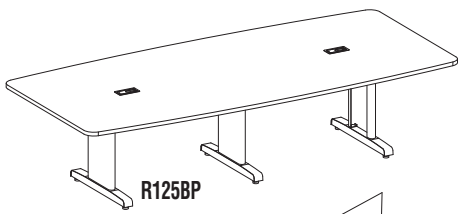

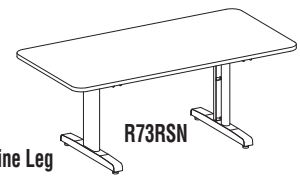

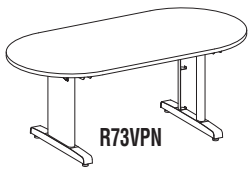

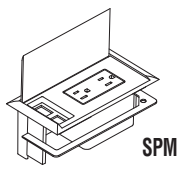

BISTRO SERIES TABLES

BISTRO TABLES

Bistro offers a line of dining and bar height tables ideal for break rooms, cafeterias, or any hospitality-type setting.

- Available in dining (29") or bar (42") heights.
- Cast iron base with 3" diameter steel tube support (Black only).
- Quick and easy assembly.
- TFL = 1" tops; HPL = 1 1/8" tops.
- Optional 18" footring.
- Available in either 1" Thermally Fused Laminate (TFL) or 1 1/8" High pressure Laminate (HPL) surfaces.
- HPL edge Treatments: T-Mold (T), Knife-Edge (K), or Fluted (R) available in corporate edge colors.

Designer Finishes: Select from over 600 high-pressure laminates; use "H" suffix on model number when ordering.

Model No.	Description	Wt.	LPL List Price "T" Suffix	HPL List Price "H" Suffix T-Mold List Price "T, K or R" Suffix
Dining Height Models				
CA30SLB	30"W x 30"D x 29"H Square Table	55#	$404	$631
CA30RLB	30"Dia. x 29"H Round Table	50#	$402	$632
CA36SLB	36"W x 36"D x 29"H Square Table	70#	$458	$728
CA36RLB	36"Dia. x 29"H Round Table	60#	$457	$729
CA42RLB	42"Dia. x 29"H Round Table	70#	$632	$797
CA2PL	72"W x 30"D x 29"H Peanut Table	75#	$1151	$1355
Bar Height Models				
CA30SHB	30"W x 30"D x 42"H Square Table	57#	$415	$646
CA30RHB	30"Dia. x 42"H Round Table	52#	$414	$647
CA36SHB	36"W x 36"D x 42"H Square Table	72#	$469	$742
CA36RHB	36"Dia. x 42"H Round Table	62#	$468	$743
CA42RHB	42"Dia. x 42"H Round Table	72#	$647	$810
CA2PH	72"W x 30"D x 42"H Peanut Table	80#	$1177	$1405

Model No.	Description	Wt.	List Price
CAFR18B	18" Steel Footring	8#	$243

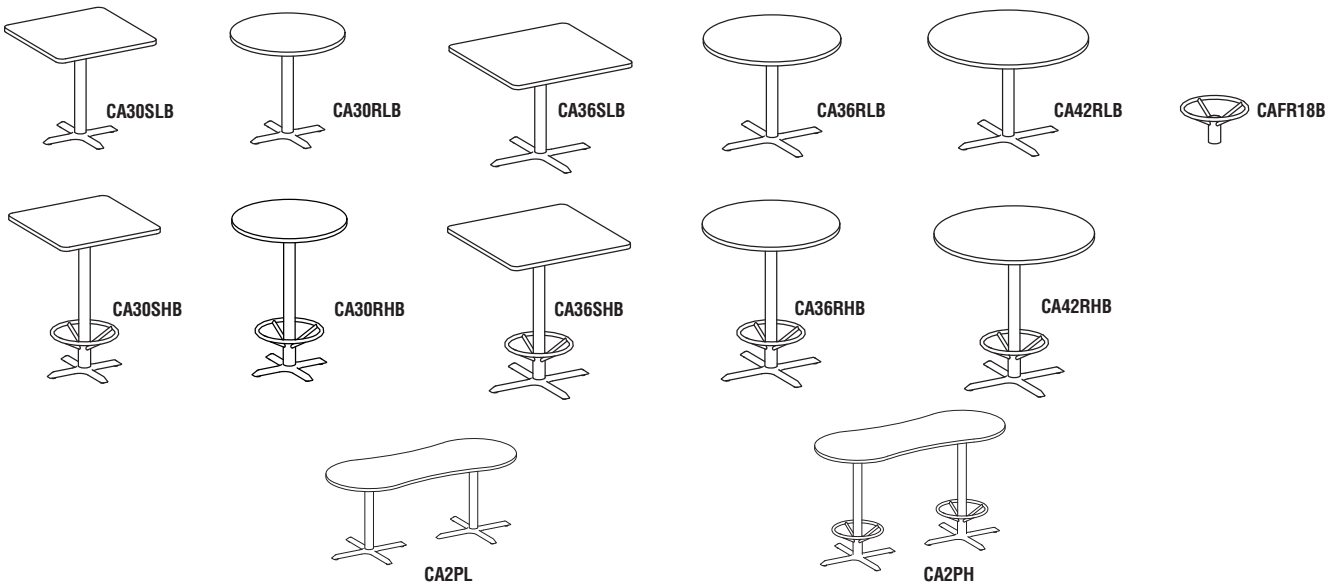

BISTRO TABLES

GSA

Upgrade your break area with a stylish and durable stainless steel bistro table.

- Available in dining (29") or bar (42") heights.
- Stainless Steel base with square tube support.
- Quick and easy assembly.
- TFL = 1" tops; HPL = 1 1/8" tops.
- Four leveling glides integrated to underside of base.
- Tables available in either Thermally Fused Laminate with standard T-Mold or High Pressure Laminate with your choice of 3 edge treatments.
- HPL edge Treatments: T-Mold (T), Knife-Edge (K), or Fluted (R) available in corporate edge colors.

DINING HEIGHT MODELS Model No.	Description	Wt.	LPL List Price "T" Suffix	HPL List Price "H" Suffix T-Mold List Price "T, K or R" Suffix
CA30SLS	30"W x 30"D x 29"H Square Table	80#	$505	$762
CA30RLS	30"Dia. x 29"H Round Table	75#	$505	$762
CA36SLS	36"W x 36"D x 29"H Square Table	95#	$560	$859
CA36RLS	36"Dia. x 29"H Round Table	85#	$560	$859
CA42RLS	42"Dia. x 29"H Round Table	95#	$737	$926
CA3PL	72"W x 30"D x 29"H Peanut Table	126#	$1295	$1627
BAR HEIGHT MODELS				
CA30SHS	30"W x 30"D x 42"H Square Table	82#	$518	$776
CA30RHS	30"Dia. x 42"H Round Table	77#	$518	$776
CA36SHS	36"W x 36"D x 42"H Square Table	97#	$573	$872
CA36RHS	36"Dia. x 42"H Round Table	87#	$573	$872
CA42RHS	42"Dia. x 42"H Round Table	97#	$750	$939
CA3PH	72"W x 30"D x 42"H Peanut Table	132#	$1479	$1849

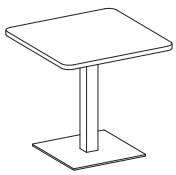
CA30SLS

CA30RLS

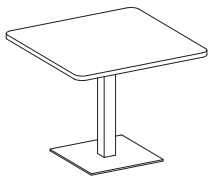
CA36SLS

CA36RLS

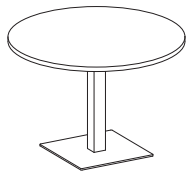
CA42RLS

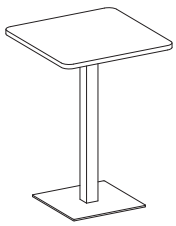
CA30SHS

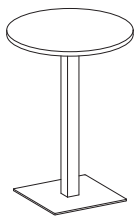
CA30RHS

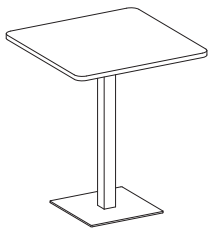
CA36SHS

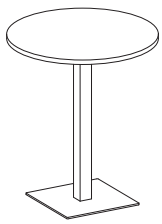
CA36RHS

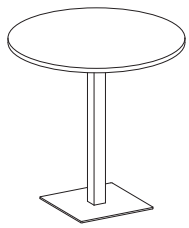
CA42RHS

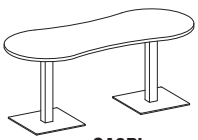
CA3PL

CA3PH

THE EVENT SERIES MULTI-PURPOSE TABLES

FAST Freight QUICK-SHIP

- A new line of multi-purpose, durable folding tables that meet most any need, indoors or out.
- All models available on both Quick-Ship and Fast Freight.

FOLDING TABLES

770048

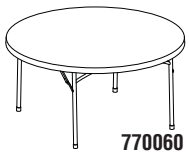
770060

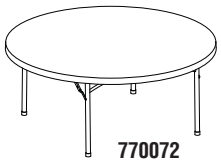
770072

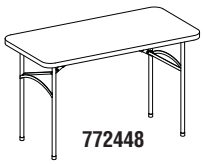
772448

- Heavy-Duty Design. Increased number of connections between the frame and the top providing an even stronger connection.
- Table height: 29".
- Indoor or outdoor use.
- Models 770048, 770060, 770072, and 773096 do not ship via small parcel. Models 772448, 773060, 773072, and 721872 are able to ship via small parcel. See Terms and Conditions.
- Optional carts available. See table carts section.
- Finishes: Textured White with Dark Gray hammer-coated frame.
- Two slide locks per table.

NOTE: Do not push or drag tables.

Model No.	Description	Dimensions	Maximum Weight Load Capacity with 1/4" Deflection *(Weight must be evenly distributed.)*	List Price
❖ **770048**	7700 Series - 48" Round	48" Diameter x 29"H	800#	$240
❖ **770060**	7700 Series - 60" Round	60" Diameter x 29"H	900#	$359
❖ **770072**	7700 Series - 72" Round	72" Diameter x 29"H	1000#	$502
❖ **772448**	7700 Series - 24" x 48" Rectangular	48"W x 24"D x 29"H	500#	$140
❖ **773060**	7700 Series - 30" x 60" Rectangular	60"W x 30"D x 29"H	600#	$188
❖ **773072**	7700 Series - 30" x 72" Rectangular	72"W x 30"D x 29"H	500#	$218
❖ **773096**	7700 Series - 30" x 96" Rectangular	96"W x 30"D x 29"H	300#	$298
❖ **721872**	7200 Series - 18" x 72" Rectangular	72"W x 18"D x 27 1/2"H	200#	$208

773060

773072

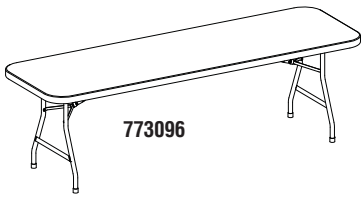
773096

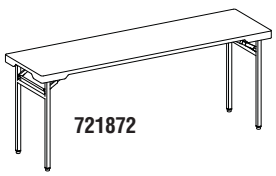
721872

TABLE CARTS

77CRND
Table Capacity:
(16) 48" tables
(14) 60" tables
(13) 72" tables

- A simple storage solution.
- Does not ship via small parcel.
- Finishes: Black powder-coat.

Model No.	Description	Dimensions	List Price
❖ **77CRND**	Round Table Dolly	58-69"W x 32 3/4"D x 40 1/4"H	$440
❖ **7724WC**	Rectangular Table Cart for 24 x 48" tables	53"W x 27 1/4"D x 45 1/4"H	$409
❖ **7730WC**	Rectangular Table Cart for 30" tables	76 3/4"W x 33"D x 45 1/4"H	$494

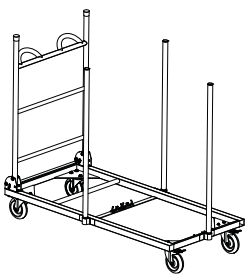

7724WC
Table Capacity:
(20) 24" x 48" tables

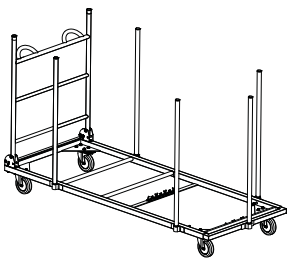

7730WC
Table Capacity:
(20) 30" x 60" tables
(20) 30" x 72" tables
(18) 30" x 96" tables

❖ *Indicates Quick-Ship models.*

CONFERENCE/TRAINING ROOM ACCESSORIES

GIZA/CAP FAST Freight QUICK-SHIP

- All models in all finishes are available on both the Quick-Ship and Fast Freight delivery programs with no quantity limitations.

PRESENTATION STAND

- Designed to support laptops, overhead projector, or LCD projector. presentations.
- Front surface supporting projectors is adjustable to three positions on 4"H increments from 30 1/2"-38 1/2"H.
- Standard casters, two locking.
- Top surface is 38 1/2"H providing a comfortable position for standing
- Rugged steel frame construction with attractive perforated leg detail. All threaded, metal-to-metal connections.

Standard Finishes: Black frame with reversible Anthracite/Folkstone surfaces **only**.

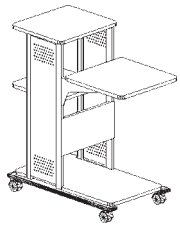

Model No.	Dimensions	Wt.	List Price
1010PC	18 1/2"W x 36"D x 38 1/2"H	75#	$647

HOSPITALITY CART

- Consistent design details with the 1010PC and 1010AV.
- Comes standard with two adjustable shelves.
- Locking casters provide easy mobility.
- Left-side door has two perforated steel storage pockets sized perfectly for 2 liter bottles.
- Easy to assemble using quarter-turn cam fasteners.
- Doors have self-closing cabinet hinges, attractive door pull, and standard lock.
- Handle provided on both left and right legs at a comfortable operating height.
- **Standard Finishes:** Black frame with Anthracite surfaces and shelves.

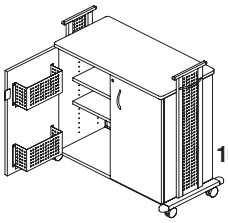

1015HC

Model No.	Dimensions	Wt.	List Price
1015HC	45 1/2"L x 21 3/4"W x 42 3/4"H	150#	$1011

LIGHTED LECTERN

- Consistent design details with the 1010PC, 1010AV and Hospitality Cart.
- All steel construction.
- Perforated column detail.
- Platform height adjusts from 33" to 47" in 1" increments without use of tools or knobs.
- Platform at 25° tilt.
- Platform is 21"W x 16"D with paper stop.
- Light included – 25 watt, UL approved, 8' cord.
- Integrated wheels for easy mobility.
- Ships UPS.
- **Standard Finish:** Black only.

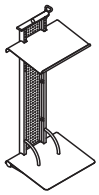

Model No.	Dimensions	Wt.	List Price
1050LT	22"W x 18"D x 51"H	24#	$751

UNIVERSAL TABLE GANGING KIT

- Designed to connect two table edges together, regardless of T-Mold style.

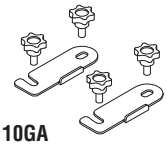

10GA

Model No.	Dimensions	Wt.	List Price
10GA	3 3/4"W x 1 1/2"D x 1"H	1#	$52

GROMMETS

- Available in Black, Taupe, Ice Gray or Warm Gray.
- Field installed grommet holes required.

F740

Model No.	Description	Dimensions	Wt.	List Price
F740	Grommet	2 3/4"W x 2 1/8"D	1#	$24

POWER & DATA

- Power & Data options can easily be attached to Training Table Tops.
- Field installed grommet holes required.

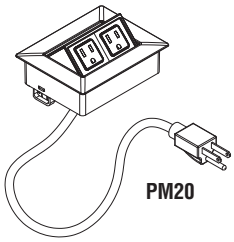

Model No.	Description	Dimensions	Wt.	List Price
PM20	Black, 2 Power Outlets	5 3/8"W x 4 1/4"D	2 1/2#	$305
PMR30	Black Tower, 3 Power Outlets	3"W x 4 1/2"D x 8"H	1 1/2#	$204
PMR22	Power & Data with 2 Power & 2 Data	3"W x 4 1/2"D x 8"H	3#	$194
PM22	Power & Data with 2 Power & 2 Data	8 1/2"W x 4 3/8"D	3#	$464

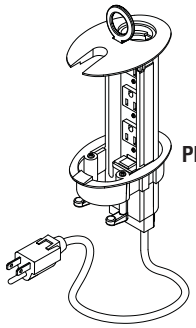

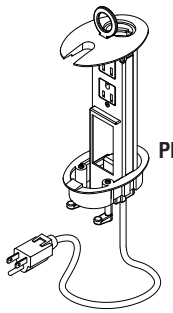

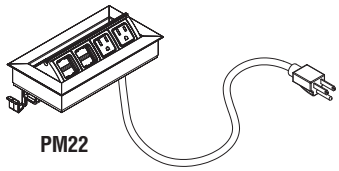

POWER/DATA MODULE

- UL Listed
- Assembles easily to table tops maximum top thickness: 1 1/4".
- Adaptable voice and date connections to meet most applications.
- Compatible with all commonly used Cat 3, Cat 5, Cat 5e, and Cat 6 jacks.
- 2 data jacks and power outlets.
- 72" 15 amp cord.
- Available in Black only.
- Ships UPS.

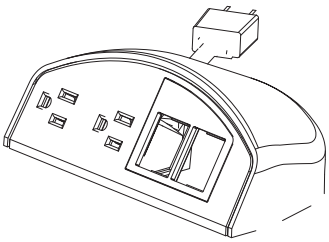

Model No.	Dimensions	Wt.	List Price
350190	6 1/4"W x 2 1/2"H	3#	$218

SEATING

Gist™ Series
Valoré® Series
Commute® Series
Ultimo™ Leather Series
Mercado™ Leather Series
Mercado™ Wood Guest
Bistro Series
Event Series
Comfort Series
Santa Cruz and Prestige Lounge

GIST™ SERIES

GIZA/CAP

GIST™ SERIES CHAIRS

Not *just* another chair – **Gist** is a seating solution for every office environment - multiple customizable adjustments including back support.

- Mesh Highback with black mesh woven with curved silver strands that reflect light.
- Soft, pressure fit back support with vertical adjustment to fit any user.
- Minimal 4 step assembly (attach back casters to base, insert cylinder, place seat on top).
- 300 lb. maximum weight rated.
- Meets ANSI/BIFMA performance requirements.
- Can ship via UPS/FedEx

QUICK-SHIP

TASK & TASK PLUS+

- Gist Task & Task Plus+ options standard with synchro tilt mechanism, height adjustment, seat slider, tilt tension and tilt lock.
- Outer dimensions: 26 1/2"W x 23 to 25"D x 37 3/4 to 41 3/4"H (Width on Plus+ is 25 1/2 to 27").
- Seated area dimensions: 18"W x 17 1/2 to 19 1/2"D x 22 1/4"H (Width on Plus+ is 18 to 19 1/2").
- Seat height: 17 1/2 to 21".
- Shipping weight: 50# 1/carton.

GS22/GS33

Model No.	Description	Wt.	List Price
Gist Task			
❖ **GS22**	Silver/Black Mesh Back, Black fabric seat Black base, cylinder & casters Height adjustable T-arms and Back Support	50#	$582
Gist Task Plus+			
❖ **GS33**	Silver/Black Mesh Back, Black fabric seat Black cylinder & casters, Polished Aluminum Base Height & width adjustable T-arms and Back Support	50#	$682

QUICK-SHIP

MULTI-PURPOSE SEATING

- Gist Multi-Purpose chair is standard with height adjustment, swivel tilt mechanism, tilt tension and tilt lock.
- Outer dimensions: 26 1/2"W x 22 1/2"D x 37 3/4 to 41 3/4"H.
- Seated area dimensions: 18"W x 17 1/2"D x 20 3/4"H.
- Seat height: 17 1/2 to 21".
- Shipping weight: 48# 1/carton.

GS11

Model No.	Description	Wt.	List Price
❖ **GS11**	Silver/Black Mesh Back, Black fabric seat Black base, cylinder & casters Fixed T-arms and Back Support	48#	$499

❖ *Indicates Quick-Ship model.*

UPHOLSTERED GIST™ SERIES

UPHOLSTERED GIST™ SERIES CHAIRS

Gist chairs are available in the custom upholstery program. Upholstered orders are non-cancellable and non-returnable.

- Refer to online upholstery fabric card (#FABCARD) for current standard carded options.
- For graded fabrics, visit www.themomentumgroup.com/mfg/208 for a complete textile offering and memo samples.
- Quick-Ship fabrics:Expo Latte/Sprout/Oasis (grade 2), Fuse Pepper (grade 2), Origin Jet (grade 2), or Canter Onyx (polyurathane (grade 2).
- COM Program available. See separate order form at the back of Price Book for guidelines.
- Soft, pressure fit back support with vertical adjustment to fit any user.
- 300 lb. maximum weight rated.
- CA117 approved
- Meets ANSI/BIFMA performance requirements.
- Minimal 4 step assembly (attach back casters to base, insert cylinder, place seat on top).
- **Available in: Silver/Black or Black Only Mesh Back.**
- Can ship via UPS/FedEx.

UPHOLSTERED TASK & TASK PLUS+

QUICK-SHIP GSA*

- Task & Task Plus+ chairs are standard with synchro tilt mechanism, height adjustment, seat slider, tilt tension and tilt lock.
- Outer dimensions: 26 1/2"W x 23 to 25"D x 37 3/4 to 41 3/4"H (Width on Plus+ is 25 1/2 to 27").
- Seated area dimensions: 18"W x 17 1/2 to 19 1/2"D x 22 1/4"H (Width on Plus+ is 18 to 19 1/2").
- Seat height: 17 1/2 to 21".
- Shipping weight: 50# 1/carton.

GS22F/GS33F

		Custom Fabric Grade (Suffix)									
Model No.	**Description**	**2**	**3**	**4**	**5**	**6**	**7**	**8**	**9**	**10**	**X(COM)**
Gist Task											
GS22F	Silver/Black or Black Mesh Back, Upholstered Seat. Black cylinder & casters. Height adjustable T-arms and Back Support. ❖	$612	$642	$672	$702	$732	$762	$792	$822	$852	$673
Gist Task Plus+											
GS33F	Silver/Black or Black Mesh Back, Upholstered Seat. Black cylinder & casters, Polished Aluminum Base, Height & width adjustable T-arms & Back Support. ❖	$712	$742	$772	$802	$832	$862	$892	$922	$952	$783

UPHOLSTERED MULTI-PURPOSE SEATING SOLUTION

QUICK-SHIP GSA*

- Gist Multi-Purpose can be used anywhere - office, conference room, meeting area and more.
- Multi-Purpose chair is standard with height adjustment, swivel tilt mechanism, tilt tension and tilt lock.
- Outer dimensions: 26 1/2"W x 22 1/2"D x 37 3/4 to 41 3/4"H.
- Seated area dimensions: 18"W x 17 1/2"D x 20 3/4"H.
- Seat height: 17 1/2 to 21".
- Shipping weight: 48# 1/carton.

GS11F

		Fabric Grade (Suffix)									
Model No.	**Description**	**2**	**3**	**4**	**5**	**6**	**7**	**8**	**9**	**10**	**X(COM)**
GS11F	Silver/Black or Black Mesh Back, Upholstered seat. Black base, cylinder & casters. Fixed T-arms and Back Support. ❖	$529	$559	$589	$619	$649	$679	$709	$739	$769	$582

❖ *Indicates Quick-Ship model.* *custom upholstered versions on GSA

VALORÉ® TRAINING SERIES

GIZA/CAP

Seating designed with training in mind. Lightweight, flexible and comfortable.

- Comfortable mesh and fabric combo with a gentle recline action.
- Seats flip allowing for compact, nesting storage.
- A compact 6 1/2" between chairs when nested. (TSH1/TSH2)
- Dual-hooded, all-purpose casters.
- Can ship via UPS/FedEx.
- 25" Arm height.
- Shipped 2 per box. (except TSH3, TSC2, TSS2)
- 250 lb. rating.
- Shipped assembled, simple caster attachment required.

HIGH-BACK CHAIR

FAST Freight QUICK-SHIP

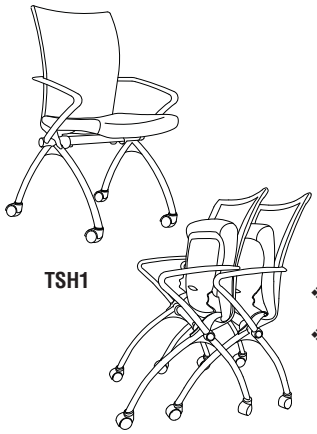

- CA133 approved.
- TSH1 with integrated arms. TSH2 without arms.
- Standard with chrome legs.
- These chairs are available on both the Quick Ship and Fast Freight delivery programs with no quantity limitations.
- **Available in:** Black, Orange or Red mesh with Black fabric seats.
- Meets ANSI/BIFMA performance requirements.

Model No.	Outside Dimensions	Seated Area Dimensions	Seat Height	Wt.	Carton List Price
❖ **TSH1**	23"W x 24"D x 36 1/2"H	19"W x 17"D x 18"H	18 1/2"	53#	$905/ctn. ($435/ea.)
❖ **TSH2**	20"W x 24"D x 36 1/2"H	18 3/4"W x 17"D x 18"H	18 1/2"	50#	$874/ctn. ($420/ea.)

HIGH-BACK CHAIRS UPHOLSTERED

QUICK-SHIP GSA*

Enhance your training environment with a perfect blend of seating comfort and designer custom upholstery*. Mobile chairs with breathable mesh backs and a gentle recline action. Mix and match your choice of frame finishes with any Momentum Textile.

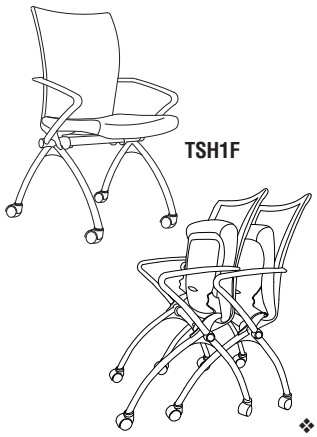

- Select chair with arms (TSH1F) or without arms (TSH2F).
- Outside Dimensions: 23"W x 24"D x 36 1/2"H.
- Seated Area Dimensions: 19"W x 17"D x 18"H.
- Seat Height: 18 1/2".
- CA117 Approved.
- Standard with black mesh seatback only.
- Legs/frame available in either black (B) powder-coat or chrome (C) finish.
- Improved seat comfort.
- Professionally upholstered in either fabric or polyurethane.
- Number following color code (below) represents fabric grade.
- For graded fabrics, please visit www.themomgroup.com/mfg/208 for a complete textile offering and memo samples.
- Upholstered orders are non-cancellable and non-returnable.
- **See separate order form at the back of the price book for COM fabric guidelines.**
- Meets ANSI/BIFMA performance requirements.

❖ **Quick-Ship (maximum 25 cartons):**
Frame: Black or Chrome
Seat Upholstery Options: Expo Latte/Sprout/Oasis (2), Origin Jet (2), Fuse Pepper (2), or Canter Onyx (polyurethane) (2)
NOTE: 14 additional fabrics available on a 10-day lead time. COM Fabric is a 20-day lead time once fabric is approved by Mayline. View website for details.

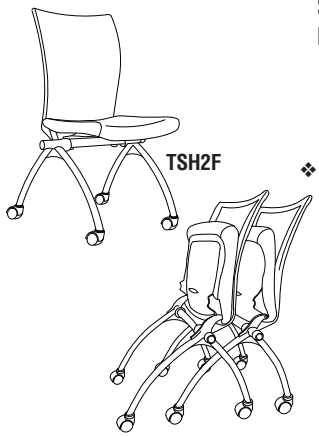

Armed Model No.	Armless Model No.	Fabric Grade	TSH1F Carton List Price	TSH2F Carton List Price
❖ **TSH1F2**	❖ **TSH2F2**	2	$1113/ctn. ($535/ea.)	$1082/ctn. ($520/ea.)
TSH1F3	**TSH2F3**	3	$1175/ctn. ($565/ea.)	$1144/ctn. ($550/ea.)
TSH1F4	**TSH2F4**	4	$1238/ctn. ($595/ea.)	$1206/ctn. ($580/ea.)
TSH1F5	**TSH2F5**	5	$1300/ctn. ($625/ea.)	$1269/ctn. ($610/ea.)
TSH1F6	**TSH2F6**	6	$1362/ctn. ($655/ea.)	$1331/ctn. ($640/ea.)
TSH1F7	**TSH2F7**	7	$1425/ctn. ($685/ea.)	$1394/ctn. ($670/ea.)
TSH1F8	**TSH2F8**	8	$1487/ctn. ($715/ea.)	$1456/ctn. ($700/ea.)
TSH1F9	**TSH2F9**	9	$1550/ctn. ($745/ea.)	$1518/ctn. ($730/ea.)
TSH1F10	**TSH2F10**	10	$1612/ctn. ($775/ea.)	$1581/ctn. ($760/ea.)
TSH1FX	**TSH2FX**	COM	$1221/ctn. ($587/ea.)	$1190/ctn. ($572/ea.)

❖ *Indicates Quick-Ship model.* **custom upholstered versions on GSA*

VALORÉ® SERIES

MID-BACK CHAIR

FAST Freight QUICK-SHIP

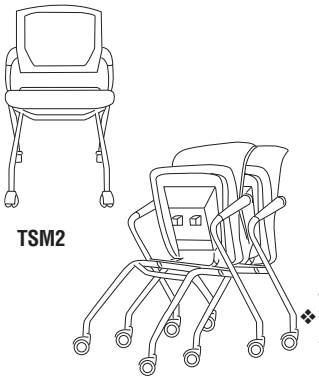

- Comfortable mesh backs with black fabric cushions.
- Chair frames are a standard powder-coated silver finish.
- CA117 approved.
- Arm height is 26".
- Compact, nesting storage.
- Standard arms and dual-hooded casters.
- Shipped assembled, 2 per box.
- 250 lb. rating.
- **Available in:** Black, Orange or Burgundy mesh with Black fabric seats.
- Meets ANSI/BIFMA performance requirements.

Model No.	Outside Dimensions	Seated Area Dimensions	Seat Height	Wt.	Carton List Price
❖ **TSM2**	21 1/2"W x 24 1/2"D x 36"H	18"W x 17"D x 17 1/2"H	18 1/2"	42#	$605/ctn. ($291/ea.)

HEIGHT ADJUSTABLE TASK CHAIR

FAST Freight QUICK-SHIP

- Basic height adjustable task chair.
- Arm height: 24 1/4" (at lowest setting).
- Shipped 1 per box.
- 5-Star, 27" aluminum base.
- 250 lb. rating.
- CA133 approved.
- Meets ANSI/BIFMA performance requirements.
- **Available in:** Black, Orange or Red mesh with Black fabric seats.

Model No.	Outside Dimensions	Seated Area Dimensions	Seat Height	Wt.	Carton List Price
❖ **TSH3**	23 1/2"W x 20 1/2"D x 36 1/2" - 40 1/4"H	19 1/2"W x 17"D x 18"H	18 1/2" - 22 1/4"	33#	$628

OPTIONAL CHAIR GLIDES

- Alternative to casters for any non-rolling application.
- Available for the TSH1 & TSH2 High Back and TSM2 Mid-Back chairs.
- Kit consists of 4 black, plastic push fit Glides.

Model No.	Wt.	Carton List Price
CHAIRGL	1#	$34

OPTIONAL CHAIR CASTERS

- Soft casters for hard surface applications.
- Not for use with Big & Tall Series.

Model No.	Wt.	Carton List Price
SCC (5-Pack)	12#	$53
SCC4 (4-Pack)	11#	$44

❖ *Indicates Quick-Ship model.*

COMMUTE® SERIES

GSA GIZA/CAP

TASK & EXECUTIVE

Simple to spec solution for today's office environment. Fits users from small to tall, simply by leveraging the seat slider (standard on Task and Executive models). Mesh or upholstered back, black* or chrome 'kits' allow this design to adapt to any environment.

- Task & Executive solutions standard with synchro-tilt mechanism and 2 1/4" travel seat slider, tilt tension, and tilt lock.
- Select either black mesh back or fully upholstered back, both with Momentum upholstered seats.
- Select either black or chrome kits (cylinder, base, T-arms, caster hub) to perfectly complement your environment.
- Outer dimensions: 25"W x 23"-25"D x 41"-45"H.
- Seated area dimensions: 18"W x 18"D x 22"H.
- Seat height 19"- 23".
- Shipping weight 50 lbs.
- 250 lb. maximum weight rated.
- Shipped nearly assembled (attach cylinder, base & casters) 1/carton.
- Refer to online upholstery fabric card (#FABCARD) for current standard carded options.
- For graded-in fabrics, visit www.themomgroup.com/mfg/208 for a **complete** textile offering and memo samples.
- COM Program available. Refer to COM Program Order Form & guidelines.
- Custom upholstered orders are non cancellable and non-returnable.
- Meets ANSI/BIFMA performance requirements.
- Can ship via UPS/FedEx

❖ **Quick-Ship Fabrics for mesh back chairs with arms (either black or chrome base kits): Expo Latte/Sprout/Oasis (grade 2), Fuse Pepper (grade 2), Origin Jet (grade 2), or Canter Onyx (polyurethane, grade 2)**

COMMUTE TASK SOLUTIONS

GSA* QUICK-SHIP

C1CB

C2BB

Model No.	Description	Custom Fabric Grade (Suffix) 2	3	4	5	6	7	8	9	10	X(COM)
C1BB	Black Mesh Back, Upholstered seat Black base, cylinder & casters Height adjustable T-arms	❖ $718	$754	$790	$827	$863	$900	$936	$972	$1009	$789
C1CB	Black Mesh Back, Upholstered seat Chrome base, cylinder & casters Height adjustable T-arms	❖ $873	$909	$945	$982	$1018	$1055	$1091	$1127	$1164	$960
C2BB	Black Mesh Back, Upholstered seat Black base, cylinder & casters No Arms	$640	$676	$712	$749	$785	$822	$858	$894	$931	$704
C2CB	Black Mesh Back, Upholstered seat Chrome base, cylinder & casters No Arms	$795	$831	$867	$904	$940	$977	$1013	$1049	$1086	$874

Note: If selecting back and seat fabrics of different grades, the higher grade fabric pricing will be utilized.

COMMUTE EXECUTIVE SOLUTIONS

GSA* QUICK-SHIP

C1BU

C2BU

Model No.	Description	Custom Fabric Grade (Suffix) 2	3	4	5	6	7	8	9	10	X(COM)
C1BU	Fully Upholstered Back and seat Black base, cylinder & casters Height adjustable T-arms	$966	$1044	$1075	$1112	$1148	$1185	$1221	$1263	$1294	$1063
C1CU	Fully Upholstered Back and Seat Chrome base, cylinder & casters Height adjustable T-arms	$1044	$1122	$1153	$1190	$1226	$1263	$1299	$1341	$1372	$1148
C2BU	Fully Upholstered Back and seat Black base, cylinder & casters No Arms	$888	$966	$997	$1034	$1070	$1107	$1143	$1185	$1216	$977
C2CU	Fully Upholstered Back and Seat Chrome base, cylinder & casters No Arms	$966	$1044	$1075	$1112	$1148	$1185	$1221	$1263	$1294	$1063

Note: If selecting back and seat fabrics of different grades, the higher grade fabric pricing will be utilized.

❖ *Indicates Quick-Ship model.* **custom upholstered versions on GSA*

GSA*

COMMUTE MULTI-PURPOSE SOLUTIONS

Commute multi-purpose chairs are versatile enough to work in any conference or meeting area, and mix well with open plan environments as well.
- Seating solution, either with loop arms or without arms, standard with swivel-tilt mechanism.
- Black mesh back with your choice of Momentum Textiles for upholstered seats.
- Black kit (cylinder, base, T-arms, caster hub) to perfectly complement your environment.
- Outer dimensions with arms: 24"W x 24"D x 40 1/4" - 44 1/4"H.
- Seated area dimensions with arms: 20"W x 18"D x 21 1/2"H.
- Seat height 18 3/4"- 22 3/4".
- Shipping weight 50 lbs.
- 250 lb. maximum weight rated.
- Shipped nearly assembled (attach cylinder, base & casters) 1/carton.
- Refer to online upholstery fabric card (#FABCARD) for current standard carded options.
- For graded fabrics, visit www.themomgroup.com/mfg/208 for a complete textile offering and memo samples.
- COM Program available. See separate order form at the back of the price book for guidelines.

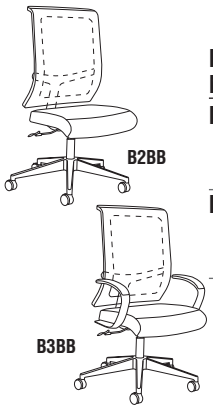

Model No.	Description	Custom Fabric Grade (Suffix) 2	3	4	5	6	7	8	9	10	X(COM)
B2BB	Black Mesh Back, Upholstered seat Black base, cylinder & casters No Arms	$550	$587	$623	$659	$696	$732	$769	$805	$841	$605
B3BB	Black Mesh Back, Upholstered seat Black base, cylinder & casters Loop Arms	$613	$649	$685	$722	$758	$795	$831	$867	$904	$674

ULTIMO LEATHER SERIES

GIZA/CAP FAST Freight QUICK-SHIP

Soft and supple top-grain leather defines these luxurious yet economical choices of seating for the office and conference room. Generous-sized deep cushions feature sculpted padding for support. Padded leather armrests add to comfort.
- Top grain cowhide leather on all seated surfaces.
- Some assembly required.
- Molded foam for plush, comfortable feel.
- 250 lb. rating.
- All Ultimo Chairs can ship via UPS/FedEx. See Terms & Conditions.
- Meets ANSI/BIFMA performance requirements.
- Due to the density of the foam, the seating range may vary by 1/2" in either direction.
- All Ultimo models in all finishes are available on both the Quick-Ship and Fast Freight delivery programs with no quantity limitations.

SERIES 100

HIGH-BACK

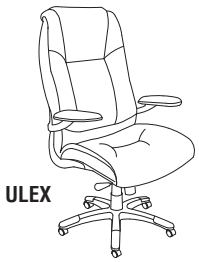

- Generously-sized sculpted deep cushions.
- Padded leather cantilevered armrests.
- Deluxe knee-tilt control.
- **Finishes:** Black/Gunmetal Gray Frame
  Burgundy/Gunmetal Gray Frame

Model No.	Outside Dimensions	Seated Area Dimensions	Seat Height	Wt.	List Price
❖ **ULEX**	31"W x 32"D x 48"-51"H	20"W x 20"D x 30"H	19"-22"	75#	$1208

MID-BACK

- Sculpted cushions.
- Padded leather loop armrests.
- Deluxe knee-tilt control.
- **Finishes:** Black/Gunmetal Gray Frame

Model No.	Outside Dimensions	Seated Area Dimensions	Seat Height	Wt.	List Price
❖ **ULMGR**	27"W x 30"D x 39"-42"H	21"W x 20"D x 24"H	19"-22"	60#	$1000

❖ *Indicates Quick-Ship model.*

*custom upholstered versions on GSA

GUEST

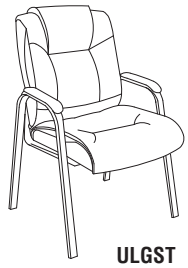
ULGST

- Sculpted cushions.
- Padded leather armrests.
- Tubular steel frame.
- **Finishes:** Black/Gunmetal Gray Frame

Model No.	Outside Dimensions	Seated Area Dimensions	Seat Height	Wt.	List Price
❖ **ULGST**	24"W x 28"D x 38"H	20"W x 19"D x 20"H	20"	35#	$727

SERIES 200

MID-BACK

UL230M

- Ultra soft, perforated leather cushions.
- Padded leather loop armrests.
- Deluxe knee-tilt control.
- **Finishes:** Black/Gunmetal Gray Frame

Model No.	Outside Dimensions	Seated Area Dimensions	Seat Height	Wt.	List Price
❖ **UL230M**	27"W x 29 1/2"D x 40 1/4"-43 1/4"H	21"W x 20"D x 23"H	20 1/4"-23 1/4"H	55#	$953

SERIES 300

HIGH-BACK

UL350H

- Thickly padded contoured leather seat and back.
- Padded leather loop armrests.
- Deluxe knee-tilt control.
- Pronounced lumbar support.
- **Finishes:** Black/Slate Frame

Model No.	Outside Dimensions	Seated Area Dimensions	Seat Height	Wt.	List Price
❖ **UL350H**	26 3/4"W x 29 1/2"D x 42 1/2"-45 1/2"H	20 1/2"W x 19 3/4"D x 25 1/4"H	20 1/4"-23 1/4"H	64#	$1081

MID-BACK WITH SYNCHRO-TILT

UL330M

- Same features as UL350H but with 2-to-1 synchro-tilt control.
- Adjustable height and width, padded leather armrests.
- **Finishes:** Black/Slate Frame

Model No.	Outside Dimensions	Seated Area Dimensions	Seat Height	Wt.	List Price
❖ **UL330M**	24 1/2"-26 1/2W x 24 1/2"D x 38 1/2"-41 1/2"H	20 3/4"W x 18"D x 19"H	19 1/2"-22 1/2"H	61#	$899

SERIES 500

EZ-ASSEMBLE HIGH-BACK

UL550HEZ

- Easy to assemble, no tools required.
- Accented with gathered seams on seat and back.
- Padded leather loop armrests.
- Does not ship UPS.
- Durable steel frame construction.
- **Finishes:** Black/Slate Frame

Model No.	Outside Dimensions	Seated Area Dimensions	Seat Height	Wt.	List Price
❖ **UL550HEZ**	26 1/2"W x 30"D x 46 1/4"-49 1/4"H	20 3/4"W x 20"D x 25 3/4"H	20 1/2"-23 1/2"H	63#	$1210

❖ *Indicates Quick-Ship models.*

MERCADO LEATHER SERIES

GIZA/CAP | FAST Freight | QUICK-SHIP

Soft and supple leather defines these comfortable and luxurious yet economical choices of seating for the office and conference room.

- Genuine leather on all seated surfaces.
- 250 lb. load rating for all Mercado Leather and Wood Chairs.
- Some assembly required.
- All Mercado Chairs can ship via UPS/FedEx. See Terms & Conditions.
- Due to the density of the foam, the seating range may vary by 1/2" in either direction.
- All models in all finishes are available on both the Quick-Ship and Fast Freight delivery programs with no quantity limitations.

PRESIDENT CHAIR

PR

- Deep pillow-style cushions for comfort.
- Chrome finished cast aluminum armrests with leather padding.
- Tilt tension and tilt lock.
- Available in Black Leather.
- Cast aluminum five-star base with chrome finish.
- Swivel seat with pneumatic height adjustment.
- Deluxe knee tilt control.

Model No.	Outside Dimensions	Seated Area Dimensions	Seat Height	Wt.	List Price
❖ **PR**	25"W x 28"D x 45"-48"H	19"W x 19"D x 27"H	19"-22"	65#	$816

ALLIANCE CHAIR

AL

- Cast aluminum five-star base with Chrome finish.
- Swivel seat with pneumatic height adjustment.
- Available in Black.
- Black nylon armrests.
- Tilt tension and tilt lock.

Model No.	Outside Dimensions	Seated Area Dimensions	Seat Height	Wt.	List Price
❖ **AL**	25"W x 31"D x 39"-42"H	20"W x 19"D x 22"H	20"-23"	42#	$636

2522 CHAIR

2522

- Black leather/mesh fabric combo on all seated surfaces.
- Pneumatic seat height adjustment with center pivot.
- Chrome, 5-star base.
- Adjustable arms.

Model No.	Outside Dimensions	Seated Area Dimensions	Seat Height	Wt.	List Price
❖ **2522**	26 1/2"W x 26"D x 38 1/2"-43"H	19 1/2"W x 17 1/2"D x 19"H	19 1/2"-24"	40#	$502

2528 CHAIR

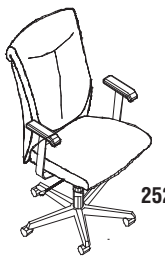

2528

- Black leather seated surfaces.
- Pneumatic seat height adjustment.
- Center pivot.
- Black nylon, 5-star base.
- Adjustable arms.

Model No.	Outside Dimensions	Seated Area Dimensions	Seat Height	Wt.	List Price
❖ **2528**	27"W x 28"D x 39 1/2"-43 1/2"H	19 3/4"W x 19"D x 25"H	18 1/2"-22 1/2"	44#	$514

❖ *Indicates Quick-Ship models.*

3200 CHAIR

3200

- Black fabric seat with mesh back.
- Pneumatic seat height adjustment.
- Adjustable arms (height and width).
- Synchro-tilt.
- Adjustable lumbar support.
- Tilt tension.

Model No.	Outside Dimensions	Seated Area Dimensions	Seat Height	Wt.	List Price
❖ **3200**	24 3/4"W x 23 1/2"D x 38"-41"H	18"W x 18 1/2"D x 20 1/2"H	17 1/2"-20 1/2"	55#	$434

2547 CHAIR

2547

- Black leather seated surfaces.
- Pneumatic seat height adjustment.
- Loop arms.
- Black nylon, 5-star base.
- Center pivot.
- Minimal assembly required; back and seat come attached.

Model No.	Outside Dimensions	Seated Area Dimensions	Seat Height	Wt.	List Price
❖ **2547**	25"W x 29 1/2"D x 38"-42"H	20 1/2"W x 20"D x 19"H	19"-23"	55#	$525

CORSICA CHAIR

CS

- Deep cushioned seat and back in Black leather.
- Swivel seat with pneumatic height adjustment.
- Deluxe knee tilt control.
- Wood five star base in choice of Sierra Cherry or Mahogany finish to match REAL Office casegoods.
- Solid wood armrests with Black leather padding.
- Tilt tension and tilt lock.

Model No.	Outside Dimensions	Seated Area Dimensions	Seat Height	Wt.	List Price
❖ **CS**	28"W x 29"D x 47"-50"H	22"W x 20"D x 29"H	19"-22"	68#	$827

❖ *Indicates Quick-Ship models.*

MERCADO WOOD GUEST SERIES

GIZA/CAP | FAST Freight | QUICK-SHIP

WOOD GUEST SEATING

Stylish designs of solid wood and genuine leather beautify any private office or reception area.

- Fully assembled frame, simple seat attachment required.
- Genuine leather on all seated surfaces.
- Cream leather available on VSC5A and VSC7A models only.
- VSC10A & VSC11A seats ship in separate box.
- Enhanced seat suspension for lasting comfort.
- Shipped 2 per box (VSC9 & VSC13 shipped 1 per box).
- Supports up to 250 lbs.
- Can ship via UPS/FedEx.

FINISH MATRIX

Model No.	Black/ Black	Sierra Cherry/Black	Mahogany /Black	Golden Cherry/Black	Bourbon Cherry/Black	Espresso /Black	Espresso /Cream	Medium Cherry/Black	Maple /Black
VSCA	✔	✔	✔	✔	–	–	–	✔	✔
VSC2A	–	✔	✔	–	–	✔	–	–	–
VSC3A	–	–	–	–	✔	✔	–	✔	✔
VSC5A	✔	✔	✔	–	✔	–	✔	–	–
VSC7A	–	✔	✔	–	–	–	✔	–	–
VSC9	✔	✔	✔	–	–	–	–	–	–
VSC10A	✔	✔	✔	–	–	–	–	–	–
VSC11A	✔	✔	✔	–	–	–	–	–	–
VSC12A	✔	✔	✔	–	–	–	–	–	–
VSC13	✔	✔	✔	–	–	–	–	–	–

Model No.		Outside Dimensions	Seated Area Dimensions	Seat Height	Wt.	Carton List Price	Each List Price
VSCA	❖	22 1/2"W x 23 1/2"D x 33 1/2"H	18 3/4"W x 17 1/4"D x 15"H	18 1/2"	50#	$1248/ctn.	$600/ea.
VSC2A	❖	22 1/4"W x 23 1/2"D x 33 1/2"H	19"W x 19"D x 14 3/4"H	18 3/4"	50#	$1248/ctn.	$600/ea.
VSC3A	❖	22 3/4"W x 24 3/4"D x 34 1/2"H	19"W x 18 3/4"D x 14 1/2"H	20"	48#	$1248/ctn.	$600/ea.
VSC5A	❖	22 3/4"W x 23 3/4"D x 33"H	19 1/4"W x 18"D x 13 1/2"H	19 1/2"	48#	$1248/ctn.	$600/ea.
VSC7A	❖	22 1/2"W x 26"D x 34 3/4"H	19"W x 18 1/2"D x 15 3/4"H	19"	50#	$1248/ctn.	$600/ea.
VSC9	❖	26"W x 23 1/2"D x 34 1/2"H	19"W x 18 1/2"D x 15 1/2"H	19"	41#	$671/ctn.	$645/ea.
VSC10A	❖	24"W x 24 1/2"D x 32 3/4"H	20"W x 20"D x 13 1/4"H	19 1/2"	66#	$1248/ctn.	$600/ea.
VSC11A	❖	23 1/4"W x 22 1/2"D x 32 1/2"H	19 1/4"W x 19 1/2"D x 13 1/2"H	19"	62#	$1248/ctn.	$600/ea.
VSC12A	❖	23"W x 23 1/2"D x 34"H	19 1/2"W x 17 3/4"D x 15"H	19"	62#	$1248/ctn.	$600/ea.
VSC13	❖	26"W x 26"D x 28 1/2"H	20 1/2"W x 19"D x 9"H	19 1/2"	35#	$671/ctn.	$645/ea.

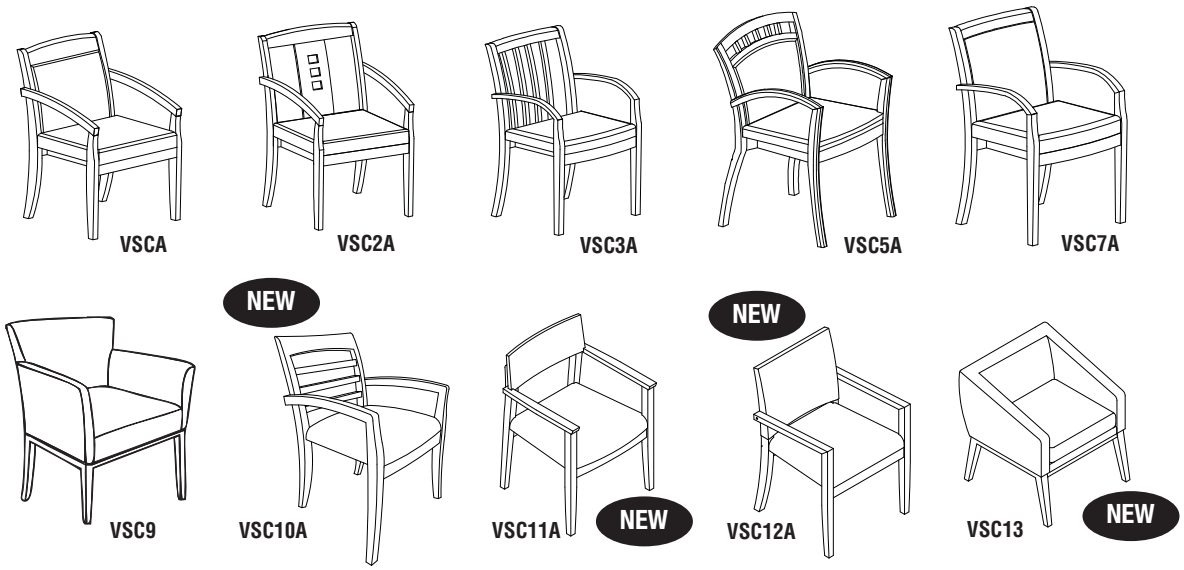

❖ *Indicates Quick-Ship model.*

FAST Freight

BISTRO SERIES ALL PURPOSE SEATING

GIZA/CAP QUICK-SHIP

VALORÉ SERIES

TSC2

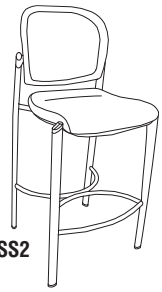

TSS2

- Comfortable mesh backs with black fabric cushions.
- Unique tubular steel frame in a silver finish.
- Integrated foot glides.
- Chairs stack up to four high.
- Chairs ship 2/carton, fully assembled.
- Stools ship 2/carton, minimal assembly required.
- Supports up to 250 lbs.
- **Available in:** Black, orange or burgundy mesh with Black fabric seats.
- Can ship via UPS/FedEx.

Model No.	Description	Outside Dimensions	Seated Area Dimensions	Seat Height	Carton Wt.	Carton List Price	Each List Price
❖**TSC2**	Valoré Chair	21 1/2"W x 21 3/4"D x 33 1/4"H	18"W x 17"D x 14 3/4"H	18 1/2"	40#	$697/ctn.	$335/ea.
❖**TSS2**	Valoré Stool	22"W x 22"D x 44 3/4"H	18"W x 17"D x 14 3/4"H	30"	55#	$936/ctn.	$450/ea.

ESCALATE SERIES

NEW COLOR

ESC2

ESS2

- Sleek and contemporary.
- Black or white plastic seat and back, chrome legs.
- Chairs shipped 4/carton.
- Stools shipped 2/carton.
- Chairs and stools stack for storage.
- Trolley available for chairs.
- Shipped completely assembled.
- Supports up to 250 lbs.
- Can ship via UPS/FedEx.

Model No.	Description	Outside Dimensions	Seated Area Dimensions	Seat Height	Carton Wt.	Carton List Price	Each List Price
❖ **ESC2**	Escalate Chair	19 1/2"W x 21 1/2"D x 32"H	18"W x 19"D x 15"H	18"	65#	$840/ctn.	$202/ea.
❖ **ESS2**	Escalate Stool	21 1/2"W x 23"D x 43 3/4"H	18"W x 19 1/2"D x 15"H	30"	45#	$597/ctn.	$287/ea.
❖ **EST**	Escalate Trolley (stacks up to 25 chairs)		21"W x 27"D x 18 1/4"H		25#	$303/ctn.	N/A

❖ *Indicates Quick-Ship model.*

THE EVENT SERIES CHAIRS

FAST Freight QUICK-SHIP

- Multipurpose seating ideal for most everything from breakrooms to banquets. Durable, lightweight, and comfortable.
- All models in all finishes available on both Quick-Ship and Fast Freight.
- All event series chairs can ship via UPS/FedEx.

FOLDING CHAIRS

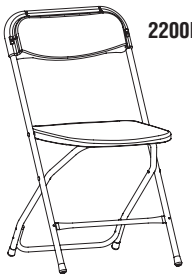

2200FC

- Polypropylene seat and back provides durability.
- Powder-coated frames.
- Available in: Wedding White, Black, Neutral.
- Able to ship via small parcel. See Terms and Conditions.
- Double-riveted cross brace on rear legs for stabilization.
- 2200 Series cart available, model 2200C, see carts section.
- 225 lb. max. weight rating.

Model No.	Description	Outside Dimensions	Seat Height	Carton Qty.	Carton List Price
❖ **2200FC**	Folding Chair	17"W x 17 3/4"D x 32"H	17 1/2"	8	$372/ctn.

HEAVY DUTY FOLDING CHAIR

5000FC

- Contoured, durable polyethylene seat and back.
- Arched cross-braces on the legs for exceptional strength.
- Optional Cart available. See chair carts section.
- 250 lb. max. weight rating.
- Integrated back handle for easy set-up.
- Able to ship via small parcel. See Terms and Conditions.
- Finishes: Textured White.

Model No.	Description	Outside Dimensions	Seat Height	Carton Qty.	Carton List Price
❖ **5000FC**	Heavy Duty Folding Chair	18 1/2"W x 21 1/2"D x 33 1/4"H	18"	4	$382/ctn.

STACKING CHAIRS

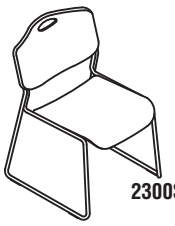

2300SC

6310SC

2300 Series: - Stacks 10 high on floor (see cart below for additional options.)

- Contoured back and extra-wide seat in a lightweight design.
- Optional Cart available. See chair carts section.
- Finishes: Black or Blue seats with Black powder-coated frames.
- 16 gauge 5/8" round high-strength steel tubing.
- Does not ship via small parcel.
- 250 lb. max. weight rating.

6310 Series:

- One piece polypropylene seat.
- Does not ship via small parcel.
- Finishes: Black or Blue seats with Black powder-coated frames.
- Optional Cart available. See below.
- 250 lb. max. weight rating.

Model No.	Description	Outside Dimensions	Seat Height	Carton Qty.	Carton List Price	Each List Price
❖ **2300SC**	Stack Chair	21"W x 21 1/2"D x 31"H	17 1/2"	4	$468/ctn.	$112/ea.
❖ **6310SC**	One Piece Stack Chair	19 1/4"W x 20 1/2"D x 30 1/2"H	17 1/2"	4	$422/ctn.	$101/ea.

CHAIR CARTS

2200C

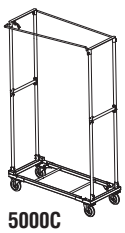

5000C

6310C

2300C

- Transport and store chairs with these easy-to-assemble carts.
- Models 2200C, 5000C, and 2300C are able to ship via small parcel. See Terms and Conditions. Model 6310C does not ship via small parcel.
- Finishes: Black powder-coat.

Model No.	Description	Outside Dimensions	Maximum Chairs per Cart	List Price
❖ **2200C**	Folding chair stack cart for 2200FC	41 1/4"W x 19"D x 77 1/2"H	60	$309/ea.
❖ **5000C**	Folding chair stack cart for 5000FC	44"W x 19"D x 74 3/4"H	27	$409/ea.
❖ **2300C**	Chair stack cart for 2300SC	24 1/4"W x 23 1/4"D x 14"H	40	$296/ea.
❖ **6310C**	Chair Lift for 6310SC and 6510SC	33 1/4"W x 25 1/2"D x 45 1/2"H	12	$577/ea.

❖*Indicates Quick-Ship model.*

COMFORT SERIES

GIZA/CAP FAST Freight QUICK-SHIP

All of the chairs in the Comfort Series provide a balanced seating environment to help reduce stress on the muscles of the thighs, back, neck and shoulders.

- The inflatable lumbar support on all models is orthopedically designed to give customized adjustment.
- Swivel seat with pneumatic height adjustment.
- Five-star base with dual hooded casters.
- Some assembly required.
- 250 lb. rating.
- Can ship via UPS/FedEx.
- Several models feature a suspended tailbone cut-out that allows the tailbone to free float, reducing fatigue and pressure on the lower back.
- Durable acrylic/poly blend upholstery in Gray and Black.
- All Comfort Chairs available on the 72-hour Quick-Ship program.
- All Comfort Chairs (except 9413AG) can ship via small parcel. See Terms & Conditions.
- All models in all finishes are available on both the Quick-Ship and Fast Freight delivery programs with no quantity limitations.

EXECUTIVE HIGH BACK CHAIR

9413AG

9413AGL

- Tailbone cut-out in seat cushion.
- Tilt, tilt tension and tilt lock controls.
- High back with waterfall seat design.
- One-piece seat frame construction.
- Does not ship via small parcel.
- Available in Gray or Black fabric. Also available in Black leather.
- T-shaped arms are height adjustable and have comfortable impact resistant urethane arm rests.

Model No.	Outside Dimensions	Seated Area Dimensions	Seat Height	Wt.	Fabric List Price	Leather List Price
						L Suffix
❖ **9413AG**	27"W x 27 1/4"D x 44 3/4-48 1/4"H	21"W x 18 1/2"D x 26"H	18 3/4"-22 1/4"	53#	$978	$1139

EXECUTIVE POSTURE CHAIR

9414AG

- Tailbone cut-out in seat cushion.
- 2 1/2" ratchet back height adjustment for optimal lumbar location.
- Waterfall seat design.
- **Multi-Function** – Three levers to modify angle of back relative to the seat, control tilt and forward tilt for keyboard intensive activities. Tilt is free float or locking within a fixed range.
- Available in Gray or Black fabric.
- Included T-shaped arms are height adjustable and have comfortable impact resistant urethane arm rests.

Model No.	Outside Dimensions	Seated Area Dimensions	Seat Height	Wt.	Fabric List Price
❖ **9414AG**	26"W x 24 3/4"D x 40 3/4"-44 1/4"H	20 1/2"W x 19"D x 24"H	16 3/4"-20 1/4"	43#	$862

❖*Indicates Quick-Ship model.*

MULTI-FUNCTION TASK CHAIR WITH OPTIONAL ARMS

4021
with 12ADJARM

- Tailbone cut-out in seat cushion.
- Ratchet back height adjustment.
- Multi-task control adjusts seat and back angles with a single lever.
- **Optional** T-shaped arms are height adjustable and have comfortable impact resistant urethane arm rests. (order separately)

Model No.	Outside Dimensions	Seated Area Dimensions	Seat Height	Wt.	List Price
❖ **4021**	20"W x 22 1/2"D x 36 1/2"-40"H	20"W x 19"D x 19 1/2"H	17"-20 1/2"	38#	$620
❖ **12ADJARM**	3"W x 9 1/2"D x 9 1/2"-12"H	8-position arms		7#	$155

CONTOURED SUPPORT CHAIR

4019AG

- Contoured back and tractor style seat to help eliminate fatigue.
- 2 1/2" ratchet back height adjustment for optimal lumbar location.
- **Multi-Function** – Three levers to modify angle of back relative to the seat, control tilt and forward tilt for keyboard intensive activities. Tilt is free float or locking within a fixed range.
- Available in Gray or Black fabric.
- T-shaped arms are height adjustable and have comfortable impact resistant urethane arm rests.

Model No.	Outside Dimensions	Seated Area Dimensions	Seat Height	Wt.	List Price
❖ **4019AG**	27"W x 25"D x 41 3/4"-45 3/4"H	21"W x 18 1/2"D x 24"H	17 1/2"-21"	44#	$738

SWIVEL TASK STOOL

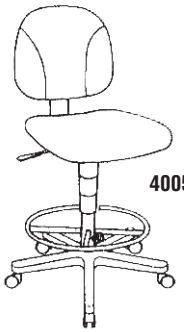

4005AG

- Twist and lock height adjustable footring.
- The inflatable lumbar support is orthopedically designed to give a customized adjustment.
- Swivel seat with pneumatic height adjustment.
- Durable acrylic/poly blend upholstered in Gray or Black fabric.
- Five-star base with dual hooded casters and optional Black nylon arms.
- Back height adjustment.
- Seat depth adjustment.
- **Optional** T-shaped arms are height adjustable and have comfortable impact resistant urethane arm rests. (order separately)

Model No.	Outside Dimensions	Seated Area Dimensions	Seat Height	Wt.	List Price
❖ **4005AG**	21"W x 24 1/2"D x 40"-50"H	21"W x 19"D x 17"-19 1/2"H	23"-33"	34#	$620
❖ **12ADJARM**	3"W x 9 1/2"D x 9 1/2"-12"H	8-position arms		7#	$155

❖*Indicates Quick-Ship model.*

COMFORT SERIES – BIG & TALL

GIZA/CAP | FAST Freight | QUICK-SHIP

All of the chairs in the Comfort Series provide a balanced seating environment to help reduce stress on the muscles of the thighs, back, neck and shoulders.

- The inflatable lumbar support on all models is orthopedically designed to give customized adjustment.
- Swivel seat with pneumatic height adjustment.
- Oversized, cast aluminum. Five-star base with dual hooded casters.
- All models in all finishes are available on both the Quick-Ship and Fast Freight delivery programs with no quantity limitations.
- All Big & Tall Chairs can ship via UPS/FedEx. See Terms & Conditions.
- Steel reinforced seat plate.
- Some assembly required.

BIG & TALL PIVOT ARM CHAIR

6446AG

- Supports up to 500 lbs.
- Heavy duty, high density foam in cushions.
- 18° tilt.
- Arms pivot out of the way to allow chair to roll up close to desk.
- Available in Gray or Black fabric or Black leather.
- Meets ANSI/BIFMA performance requirements.

Model No.	Outside Dimensions	Seated Area Dimensions	Seat Height	Wt.	Fabric List Price	Leather List Price
						L Suffix
❖ **6446AG***	29"W x 28"D x 45"-49"H	23"W x 21"D x 28"H	19 1/4"-23 1/4"	65#	$1166	$1299

*(Limited quantities available in Blue and Burgundy.)

6446AGL

BIG & TALL EXECUTIVE CHAIR

1801AG

- Supports up to 500 lbs.
- Available in Gray or Black fabric or Black leather.
- Heavy duty, high density foam in cushions.
- Meets ANSI/BIFMA performance requirements.

Model No.	Outside Dimensions	Seated Area Dimensions	Seat Height	Wt.	Fabric List Price	Leather List Price
						L Suffix
❖ **1801AG**	27"W x 27"D x 44"-48"H	22"W x 19"D x 27"H	19"-23"	69#	$1034	$1163

24-HOUR HIGH PERFORMANCE CHAIR

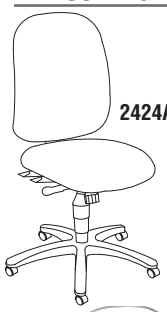

2424AG

- Supports up to 300 lbs.
- Seat cushion features memory foam.
- Multi-function chair control allows the seat and back angle to be independently adjusted.
- Chair seat tilts both forward and rearward with tilt tension adjustment.
- **Optional** T-shaped arms are height adjustable and have comfortable impact resistant urethane arm rests.
- Sculpted back has pronounced lumbar support for maximum lower back comfort.
- Back is height adjustable for precise positioning of the lumbar area.
- Available in Gray, or Black fabric. Also available in Black Leather.

Model No.	Outside Dimensions	Seated Area Dimensions	Seat Height	Wt.	Fabric List Price	Leather List Price
						L Suffix
❖ **2424AG***	21"W x 29"D x 42"-45"H	21"W x 20"D x 23"H	19"-22"	58#	$782	$913
❖ **12ADJARM**	3"W x 9 1/2"D x 9 1/2"-12"H	8-position arms		7#	$155	

*(Limited quantities available in Blue.)

2424AGL

❖ *Indicates Quick-Ship models.*

STOOLS

GIZA/CAP FAST Freight QUICK-SHIP

SWIVEL TASK STOOL

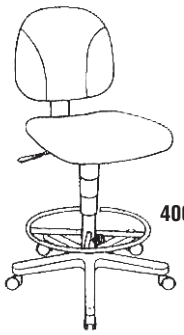

4005AG

- The inflatable lumbar support is orthopedically designed to give a customized adjustment.
- Swivel seat with pneumatic height adjustment.
- Durable acrylic/poly blend upholstered in Gray or Black.
- Five-star base with dual hooded casters and optional Black nylon arms.
- Twist and lock, height adjustable foot ring.
- Back height adjustment.
- Seat depth adjustment.
- Can ship via UPS/FedEx.
- 250 lb. rating.
- Meets ANSI/BIFMA performance requirements.
- **Optional** T-shaped arms are height adjustable and have comfortable impact resistant urethane arm rests.

Model No.	Outside Dimensions	Seated Area Dimensions	Seat Height	Wt.	List Price
❖ **4005AG**	21"W x 24"D x 40"-50"H	21"Wx19"Dx18"-20"H	23"-33"	40#	$620
❖ **12ADJARM**	3"W x 9 1/2"D x 9 1/2"-12"H	8-position arms		7#	$155

❖ *Indicates Quick-Ship models.*

LOUNGE FURNITURE

GIZA/CAP | FAST Freight | QUICK-SHIP

NOTE: Not on GSA.

- All models in all finishes are available on both the Quick-Ship and Fast Freight delivery programs with no quantity limitations.

PRESTIGE SERIES

- All seated surface areas are genuine leather and available in Black.
- Black legs are standard.
- CA117 approved.
- New foot Kit finish options: Silver, Sierra Cherry or Mahogany finish. Please specify.

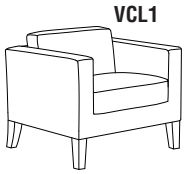
VCL1

❖ Model No.	Description	Outside Dimensions	Seated Area	Seat Ht.	Wt.	List Price
❖ **VCL1**	Chair	33 1/4"W x 29"D x 29 1/4"H	24 1/4"W x 20"D x 12 1/4"H	17"	109#	$1045
VCL2	Settee	53 1/2"W x 29"D x 29 1/4"H	44 1/2"W x 20"D x 12 1/4"H	17"	150#	$1671
❖ **VCL3**	Sofa	77 1/2"W x 29"D x 29 1/4"H	68 1/2"W x 20"D x 12 1/4"H	17"	183#	$2177
❖ **VCLL**	Optional Foot Kit for VCL1, VCL2 & VCL3	*See available finishes above.*	2"W x 2 1/4"D x 7 1/2"H		6#	$62

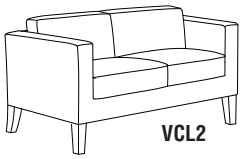
VCL2

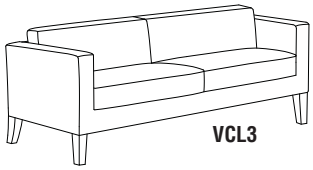
VCL3

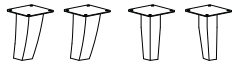
VCLL

SANTA CRUZ LOUNGE SERIES

- Available in either Black leather or Almond leather (both standard with Black feet). Optional foot kit colors available.
- Genuine leather on all seated surfaces.
- Mobile chair includes heavy-duty black double wheel casters in the front, black wood feet in the back.
- Mobile chair available with or without tablet.
- Mobile chair tablet: 360° swivel (15"W x 12"D), tablet height 27", available in Chestnut finish.
- Brushed aluminum handle on mobile chair back for easy mobility.
- Foot kit finish options: Mahogany, Sierra Cherry, Golden Cherry, Espresso, Maple, Bourbon Cherry, Silver or Black for VCC1, VCC2 or VCC3.
- Storage ottoman standard with four casters for easy mobility; Chestnut table inside.
- CA117 approved.

VCCMT

VCC

Model No.	Description	Outside Dimensions	Seated Area	Seat Ht.	List Price
❖ **VCCM**	Mobile Lounge Chair	31"W x 33"D x 30 3/4"H	18 1/2"W x 21"D x 11 3/4"H	19"	$1202
❖ **VCCMT**	Mobile Lounge Chair With Tablet	31"W x 33"D x 30 3/4"H	18 1/2"W x 21"D x 11 3/4"H	19"	$1444
❖ **VCC**	Storage Ottoman	17 1/2"W x 17 1/2"D x 18 1/2"H	17 1/2"W x 17 1/2"D x 18 1/2"H	18 1/2"	$480
❖ **VCC1**	Chair	36"W x 34 1/4"D x 32 1/4"H	21 1/2"W x 22"D x 13 1/4"H	19"	$1178
❖ **VCC2**	Settee	55"W x 34 1/4"D x 32 1/4"H	41"W x 22"D x 13 1/4"H	19"	$1757
❖ **VCC3**	Sofa	75 1/4"W x 34 1/8"D x 32 1/4"H	61"W x 22"D x 13 1/4"H	19"	$2283
❖ **VCCL**	Optional Foot Kit for VCC1, VCC2 & VCC3	2"W x 3"D x 3 1/2"H	*See available finishes above.*		$62

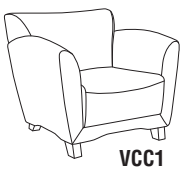
VCC1

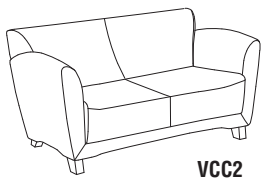
VCC2

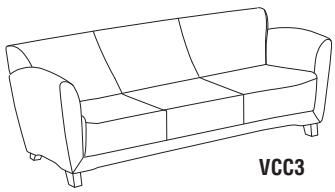
VCC3

VCCL

❖ *Indicates Quick-Ship models.*

HIGH DENSITY STORAGE

Mobile Aisle™
Mobile Lite
4 Post Shelving
The Security Shade
Heavy-Duty Shelving
File Harbor Cabinets
Forms & Storage Cabinets
ARC™ Rotary Files
Flip-N-File™
Decorative Enhancements
Insertables
Filing Carts
Mobilizers™
Lateral Files

MOBILE AISLE™

The most important element of any storage or filing project is to create an environment for ***proper storage*** and ***ease of retrieval*** of items or records and information. The Mobile Aisle solution eliminates wasted aisle space by utilizing it to triple the storage and filing capacity compared to what a conventional filing cabinet would provide. Mayline manufactures a complete line of high-density, modular systems that will integrate into any office environment.

Our highly trained staff can solve filing and storage problems by analyzing what needs to be stored and how and when it needs to be accessed and handled. Our 1000 Mechanical Assist system easily accommodates our 4-Post shelving and that of other manufacturers. Our Mobile Aisle systems provide quick and easy retrieval of side tab media. Other options include Reference Shelves, Roll-out Drawers, Wire Shelving and Slatwall for additional types of storage.

To take the trouble and worry out of specifying a Mobile Aisle solution, we will do all the up-front work for you. We offer **FREE DESIGN SERVICE** to not only recommend the best solution, but we will also develop a drawing for your floor plan along with a list of all the materials you need to order … **FREE**! Call 1-800-822-8037, email to spaceplanning@mayline.com, or fax to 920-208-7970.

Mobile Aisle 1000 Mechanical Assist

The new 1000 series Mobile Aisle comes with greater flexibility for rail placement allowing design to be easier around obstructions and on specialized floor support applications. The Mobile Aisle1000 Mechanical Assist system is operated by a three pronged star handle with red safety occupancy indicator. Conveniently located in the center of the end panel assembly, the handle will easily move 10,000 pounds of shelving and media with only 1 pound of effort. Multiple ranges can be moved simultaneously promoting increased filing and retrieval time. The heavy-duty mechanical assist design can move up to 30 feet in range length. In addition to traditional filing solutions the system offers a wide variety of storage options that will provide a secure environment for items such as archival objects, law enforcement guns, ammo and evidence, medical and pharmaceutical supplies and instruments, and retail backroom storage, to name a few, utilizing traditional steel shelving, wire shelving, roll-out drawers and slatwall.

Wasted aisle space is eliminated with Mayline's high-density mobile storage systems.

4-POST SHELVING

- **NO hardware required for installation**
- End panels provide a finished appearance.
- All shelving is offered in 24", 30", 36", 42" and 48" widths.
- All shelving is offered in 9", 12", 15", 18", 24" and 30" depths.
- Dividers interlock with common stop for stability.
- 4-Post design shelving will support 240 lbs. per shelf.
- **Heavy-Duty** will support 1000 lbs. per shelf.
- Accessories: Roll-out drawers, Posting/Reference Shelf, Security Shades, Slatwall, Wire Shelving.
- Wall anchoring brackets and hardware available.
- Easy to relocate.

WIRE SHELVING

- Bright zinc chloride plating followed by clear chromate plating with MasterSeal® sealer for improved rust protection.
- 3-year limited warranty on wire shelving.
- NSF-listed for dry storage environments.
- Shelving offered in 12", 15", 18", 24", 30" and 36" widths.
- All shelving is offered in 24", 36", 42" and 48" depths.
- Shelves load tested to 250 lbs./zero deflection.
- Available for even dimension 4-Post only.
- Shelves mount over two shelf supports of a 4-Post system.
- Optional Center Stop assemblies are available that include one side-to-side partition that interlocks with two front-to-back ledges to form an "H".
- Additional side-to-side partitions are also sold separately.

TRACK, DECKING & RAMPS

- Non-grouted track, totally re-levelable at any time.
- Levelers in pairs positioned every 6".
- Two point contact to floor for weight load distribution.
- Track interlocks and overlaps at all track joints.
- Attachment to floor with hilti (expansion bolt).
- Deck is supplied by Mayline.
- Available with fire-retardant carpet (Charcoal or Taupe) or unfinished.
- Deck panels – complete with levelers.
- Low profile standard system entry or ADA/incline ramp options.

END PANEL DRIVE ASSEMBLIES

- 1 pound of pressure required to move 10,000 lbs.
- All steel, *no particleboard.*
- Painted steel end panels available in Corporate colors standard.
- Magnetic design enhancement option available in laminate, veneer and fabric.
- Three spoke handle which includes a range safety lock with red locking indicator.

Contact Space Planning for free design service
1-800-822-8037 or email spaceplanning @ mayline.com

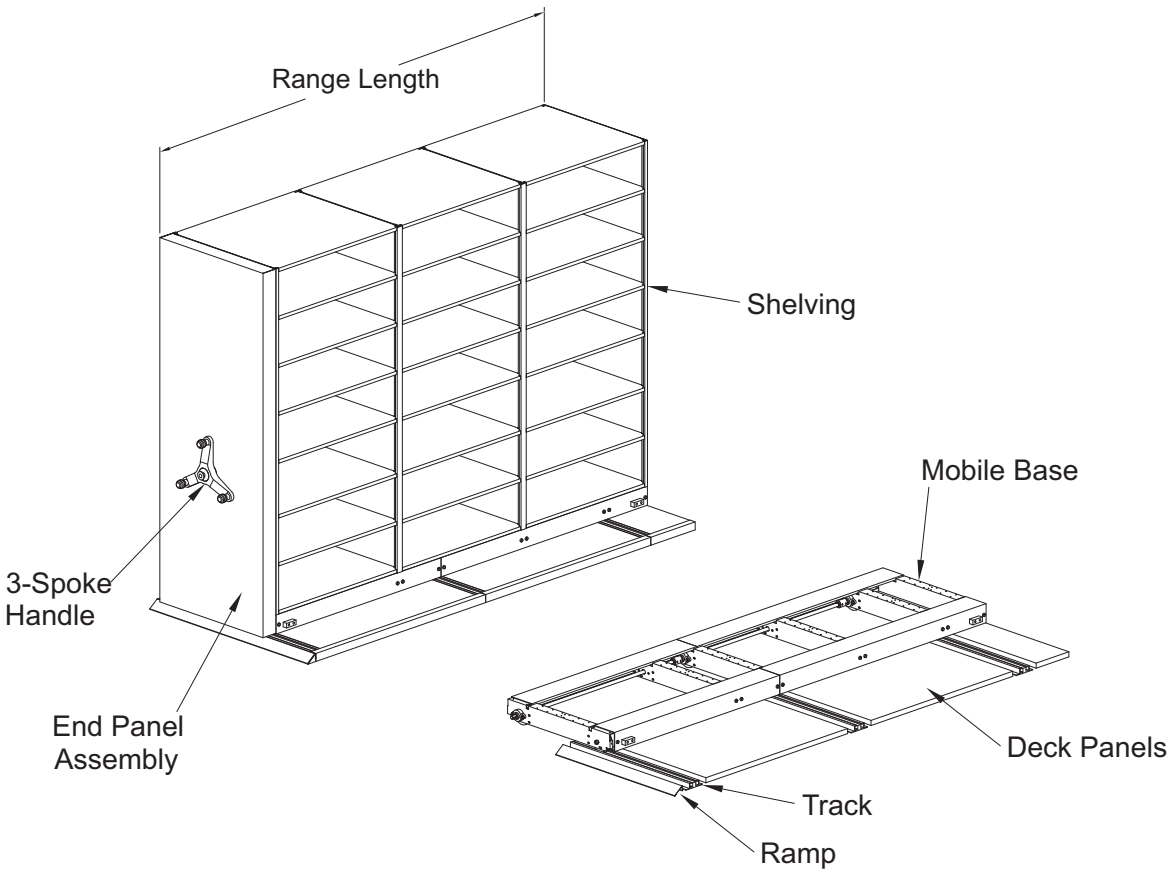

FREE SPACE PLANNING SERVICES

Our storage and filing experts can help – **FREE OF CHARGE.** If your storage problems can be solved with Mobile 1000, let us help! Our Spaceplanning Team are experts at storage and filing solutions and can design Mobile 1000 to fit your storage area perfectly. Our Spaceplanners have extensive knowledge of Mobile 1000, Mobile Lite, 4-Post, Arc Rotary, Heavy-Duty, Flip 'n File, File Harbor and Kwik Track systems.

Our Spaceplanners are able to receive requests via email, fax or via the Mayline website. The filing survey is located at www.mayline.com under Free Design Service. The filing survey takes just a few minutes and will provide our Spaceplanners with the necessary information to complete a quote and design layout. Email your room drawings in AutoCAD or pdf format to spaceplanning@mayline.com or fax us at 920-208-7970.

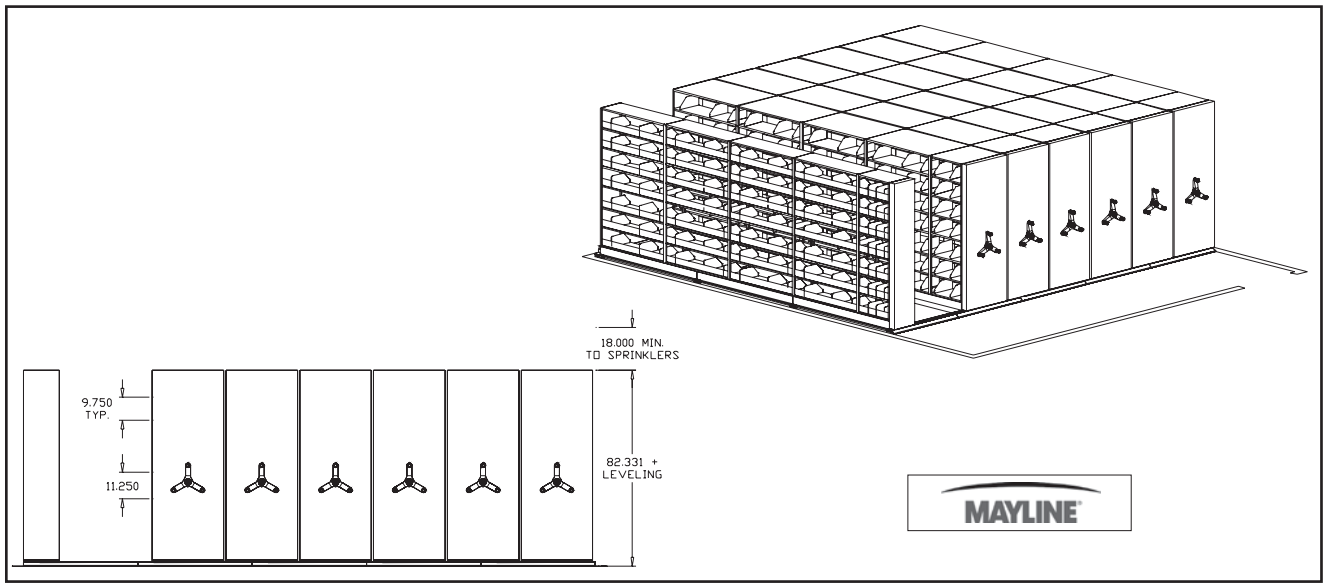

Certified Installers

Mayline has their very own Certified Installers. The Certified Installers go through an in-depth training on all of the Filing & Storage System products. To find an installer near you, visit www.mayline.com.

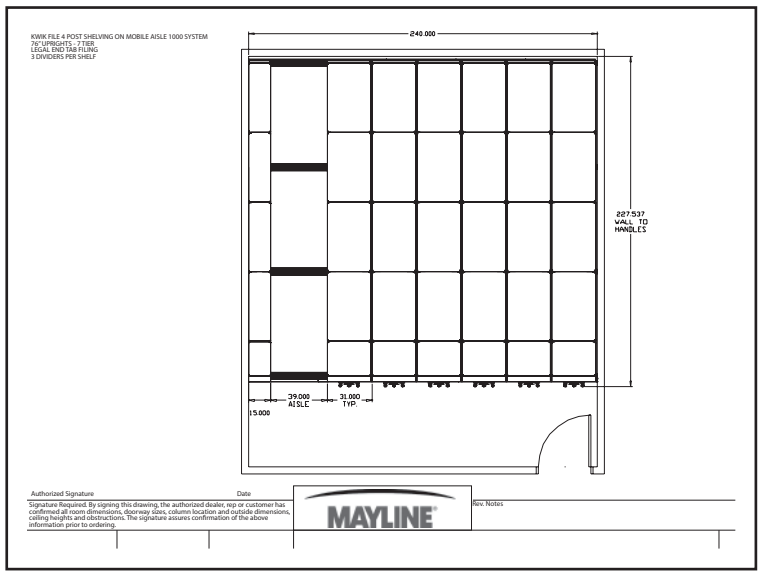

MOBILE LITE TYPICALS

Think of Mobile Lite as the streamlind version of Mobile 1000 – same concept with a few tweaks that make it even more affordable. It not only costs less, it installs in half the time of larger, heavy-duty systems.

Complete Mobile Lite typical model numbers include the following; one single faced fixed unit, one single face movable unit and a range of 2 to 4 double face movable units. Model numbers also include 7-tier 4-post shelving, back panels for single face units, dividers, half high end panel assembly, key lock included with single face movable unit, plunger lock included with all double face movable units, mobile bases, track and additional track for typical aisle walkway. No decking or ramping required. For special customer requirements please contact the Mayline's Space Pl*anning depar*tment for free design service at 1-800-822-8037.

Letter Depth Shelving Model Numbers	System Width	Overall Range Length	Overall Height	Wt.	Aisle	LFI	System Size	List Price
EML3672L	118"	44"	80 1/4"	1159	36"	1454"	10' x 4'	$10704
EML3673L	144"	44"	80 1/4"	1500	36"	1939"	12' x 4'	$13750
EML3674L	170"	44"	80 1/4"	1844	36"	2424"	15' x 4'	$16865
EML4872L	118"	56"	80 1/4"	1334	36"	1958"	10' x 5'	$11758
EML4873L	144"	56"	80 1/4"	1562	36"	2611"	12' x 5'	$15132
EML4874L	170"	56"	80 1/4"	2099	36"	3263"	15' x 5'	$18612
EML7272L	118"	80"	80 1/4"	1858	36"	2912"	10' x 7'	$16364
EML7273L	144"	80"	80 1/4"	2384	36"	3884"	12' x 7'	$20956
EML7274L	170"	80"	80 1/4"	2909	36"	4854"	15' x 7'	$25794
EML9672L	118"	104"	80 1/4"	2202	36"	3916"	10' x 9'	$18680
EML9673L	144"	104"	80 1/4"	2810	36"	5222"	12' x 9'	$23981
EML9674L	170"	104"	80 1/4"	3417	36"	6527"	15' x 9'	$29438

System Width: Total length from left to right of system.
Overall Range Length: From wall to the tip of the handle (dimension includes 1 1/2" clearance from wall).
Overall Height: Distance from the floor to the top of shelving.
Aisle: Walkway between ranges.
LFI: The amount of Linear Filing Inches offered in each typical.
System Size: Footprint of the system.

Letter
EML3672L
EML = Mobile Lite
36 = Overall shelving length in inches.
7 = Number of shelves per unit.
2 = Number of double face movable units.
L = Letter media.

Letter
EML4874L
EML = Mobile Lite
48 = Overall shelving length in inches.
7 = Number of shelves per unit.
4 = Number of double face movable units.
L = Letter media.

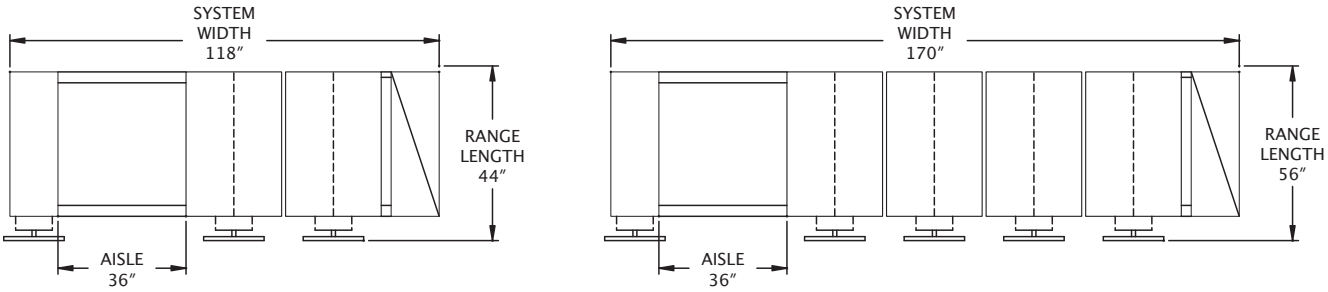

"Top View of System Ranges"

MOBILE LITE TYPICALS

Legal Depth Shelving Model Numbers	System Width	Overall Range Length	Overall Height	Wt.	Aisle	LFI	System Size	List Price
EML3672G	135"	44"	80 1/4"	1337	36"	1454"	12' x 4'	$11361
EML3673G	167"	44"	80 1/4"	1745	36"	1939"	14' x 4'	$14763
EML3674G	199"	44"	80 1/4"	2153	36"	2424"	17' x 4'	$18083
EML4872G	135"	56"	80 1/4"	1505	36"	1958"	12' x 5'	$12233
EML4873G	167"	56"	80 1/4"	1955	36"	2611"	14' x 5'	$15857
EML4874G	199"	56"	80 1/4"	2405	36"	3263"	17' x 5'	$19399
EML7272G	135"	80"	80 1/4"	2153	36"	2912"	12' x 7'	$17339
EML7273G	167"	80"	80 1/4"	2770	36"	3884"	14' x 7'	$22443
EML7274G	199"	80"	80 1/4"	3431	36"	4854"	17' x 7'	$27426

Heavy-Duty Depth Shelving Model Numbers	System Width	Overall Range Length	Overall Height	Wt.	Aisle	LFI	System Size	List Price
EML3652X	160"	44"	89"	1297	42"	1039"	14' x 4'	$14391
EML3653X	198"	44"	89"	1695	42"	1385"	17' x 4'	$18610
EML3654X	236"	44"	89"	2097	42"	1731"	20' x 4'	$22794
EML4852X	160"	56"	89"	1465	42"	1399"	14' x 5'	$14607
EML4853X	198"	56"	89"	1905	42"	1865"	17' x 5'	$18866
EML4854X	236"	56"	89"	2365	42"	2331"	20' x 5'	$23118

System Width: Total length from left to right of system.
Overall Range Length: From wall to the tip of the handle (dimension includes 1 1/2" clearance from wall).
Overall Height: Distance from the floor to the top of shelving.
Aisle: Walkway between ranges.
LFI: The amount of Linear Filing Inches offered in each typical.
System Size: Footprint of the system.

Legal
EML7273G
EML = Mobile Lite
72 = Overall shelving length in inches.
7 = Number of shelves per unit.
3 = Number of double face movable units.
G = Legal media.

Heavy-Duty
EML3652X
EML = Mobile Lite
36 = Overall shelving length in inches.
5 = Number of shelves per unit.
2 = Number of double face movable units.
X = Heavy-duty media.

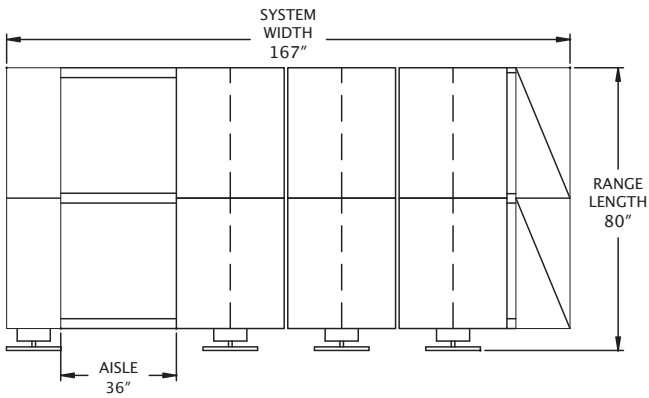

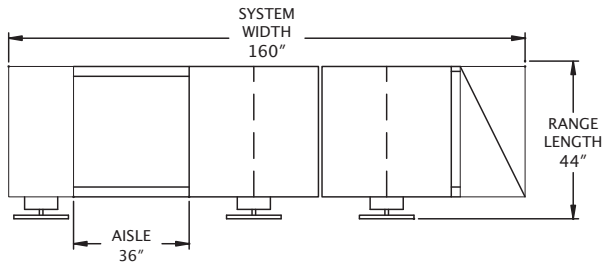

"Top View of System Ranges"

4-POST SHELVING

A complete starter section unit includes two uprights, the required number of shelves (24", 30", 36", 42" or 48" wide), center stops or back stops, shelf supports, shelf reinforcements as required, and one canopy top. Shelves are 18 or 22 gauge steel. Adder units include the previously mentioned parts with one upright, closed or open. (Note: Shelf supports and reinforcements are standard in Pebble Gray.) 240# capacity per shelf. All shelving adjusts on 1 1/2" increments along 4-Post uprights.

Choose from either closed “L” uprights, closed “T” uprights, or open “T” uprights. “T” uprights are normally for internal range support, while closed “L” uprights provide a more finished external appearance.

Dividers are not included, but are required when using standard common stops. Dividers adjust on 3" increments. Back panels are optional. Units sold open-back as standard.

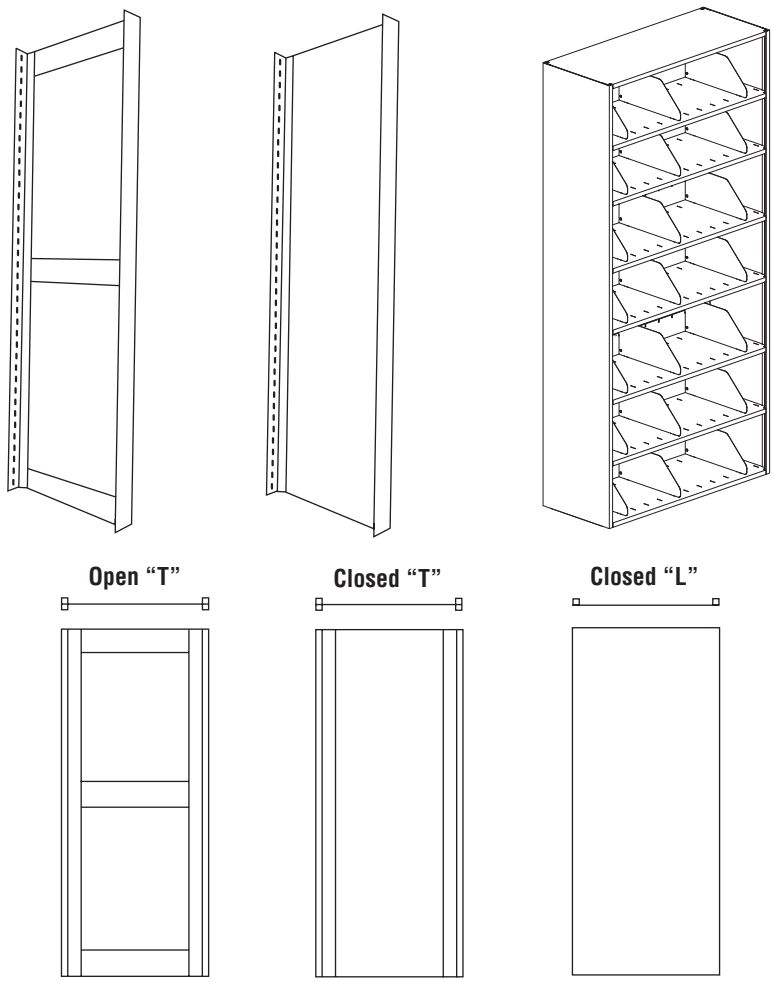

PRODUCT NUMBERING SYSTEM FOR 4-POST SHELVING

Product Number Example: **EFL3624686S**

E	Even Dimension 4-Post
F	4-Post Shelving
L, T or O	Shelving Type (“L” for Closed L-Upright, “T” for Closed T-Upright, and “O” for Open T-Upright.)
36	Shelving Width in Inches (24, 30, 36, 42 or 48)
24	Shelving Depth in Inches (9, 12, 15, 18, 24, or 30)
86	Upright Height in Inches (43, 65, 76, 86, or 97)
8	Number of Usable Shelves
S	Starter
A	Adder

4-POST SHELVING

43" HEIGHT, THREE-TIER COMPLETE ASSEMBLIES (BINDER STORAGE)

NOTE: Recommend using laminate tops for more finished appearance. Special pricing provided by Space Planning.

Starter Units with Two Closed "L" Uprights

Model No.	W	D	H	Wt.	List Price
EFL2409433S	24"	9"	43"	40#	$407
EFL2412433S	24"	12"	43"	48#	$381
EFL2415433S	24"	15"	43"	55#	$401
EFL2418433S	24"	18"	43"	66#	$498
EFL2424433S	24"	24"	43"	80#	$525
EFL2430433S	24"	30"	43"	99#	$585
EFL3009433S	30"	9"	43"	44#	$407
EFL3012433S	30"	12"	43"	53#	$381
EFL3015433S	30"	15"	43"	62#	$401
EFL3018433S	30"	18"	43"	73#	$503
EFL3024433S	30"	24"	43"	89#	$527
EFL3030433S	30"	30"	43"	109#	$587
EFL3609433S	36"	9"	43"	51#	$407
EFL3612433S	36"	12"	43"	59#	$384
EFL3615433S	36"	15"	43"	68#	$405
EFL3618433S	36"	18"	43"	81#	$510
EFL3624433S	36"	24"	43"	99#	$538
EFL3630433S	36"	30"	43"	120#	$587
EFL4209433S	42"	9"	43"	63#	$419
EFL4212433S	42"	12"	43"	72#	$404
EFL4215433S	42"	15"	43"	83#	$443
EFL4218433S	42"	18"	43"	94#	$527
EFL4224433S	42"	24"	43"	113#	$570
EFL4230433S	42"	30"	43"	136#	$639
EFL4809433S	48"	9"	43"	70#	$461
EFL4812433S	48"	12"	43"	81#	$456
EFL4815433S	48"	15"	43"	91#	$492
EFL4818433S	48"	18"	43"	104#	$573
EFL4824433S	48"	24"	43"	123#	$628
EFL4830433S	48"	30"	43"	148#	$689

Adder Units with Open "T" Upright / With Closed "T" Upright

Model No.	W	D	H	Wt.	List Price	Model No.	Wt.	List Price
EFO2409433A	24"	9"	43"	32#	$318	**EFT2409433A**	32#	$373
EFO2412433A	24"	12"	43"	35#	$294	**EFT2412433A**	37#	$351
EFO2415433A	24"	15"	43"	37#	$308	**EFT2415433A**	42#	$371
EFO2418433A	24"	18"	43"	42#	$414	**EFT2418433A**	50#	$478
EFO2424433A	24"	24"	43"	49#	$431	**EFT2424433A**	60#	$502
EFO2430433A	24"	30"	43"	59#	$464	**EFT2430433A**	74#	$558
EFO3009433A	30"	9"	43"	37#	$318	**EFT3009433A**	36#	$373
EFO3012433A	30"	12"	43"	40#	$294	**EFT3012433A**	42#	$351
EFO3015433A	30"	15"	43"	44#	$308	**EFT3015433A**	49#	$371
EFO3018433A	30"	18"	43"	49#	$419	**EFT3018433A**	57#	$483
EFO3024433A	30"	24"	43"	57#	$433	**EFT3024433A**	69#	$504
EFO3030433A	30"	30"	43"	68#	$466	**EFT3030433A**	84#	$560
EFO3609433A	36"	9"	43"	43#	$318	**EFT3609433A**	43#	$373
EFO3612433A	36"	12"	43"	46#	$297	**EFT3612433A**	48#	$354
EFO3615433A	36"	15"	43"	50#	$312	**EFT3615433A**	55#	$375
EFO3618433A	36"	18"	43"	57#	$419	**EFT3618433A**	64#	$483
EFO3624433A	36"	24"	43"	66#	$433	**EFT3624433A**	77#	$504
EFO3630433A	36"	30"	43"	79#	$466	**EFT3630433A**	95#	$560
EFO4209433A	42"	9"	43"	55#	$331	**EFT4209433A**	55#	$386
EFO4212433A	42"	12"	43"	59#	$317	**EFT4212433A**	62#	$374
EFO4215433A	42"	15"	43"	64#	$350	**EFT4215433A**	69#	$413
EFO4218433A	42"	18"	43"	71#	$443	**EFT4218433A**	78#	$507
EFO4224433A	42"	24"	43"	81#	$476	**EFT4224433A**	92#	$547
EFO4230433A	42"	30"	43"	95#	$518	**EFT4230433A**	111#	$612
EFO4809433A	48"	9"	43"	63#	$372	**EFT4809433A**	62#	$427
EFO4812433A	48"	12"	43"	68#	$369	**EFT4812433A**	70#	$426
EFO4815433A	48"	15"	43"	73#	$399	**EFT4815433A**	78#	$462
EFO4818433A	48"	18"	43"	80#	$489	**EFT4818433A**	88#	$553
EFO4824433A	48"	24"	43"	91#	$534	**EFT4824433A**	103#	$605
EFO4830433A	48"	30"	43"	108#	$568	**EFT4830433A**	123#	$662

9", 12" and 15" are single entry only. 24" and 30" deep are double entry.
DIVIDERS ARE NOT INCLUDED. 3 dividers recommended per shelf. Dividers required for use with common stops. Shelves are 22-gauge.

4-POST SHELVING

65" HEIGHT, SIX-TIER COMPLETE ASSEMBLIES

Starter Units with Two Closed "L" Uprights

Model No.	W	D	H	Wt.	List Price
EFL2409656S	24"	9"	65"	67#	$590
EFL2412656S	24"	12"	65"	79#	$555
EFL2415656S	24"	15"	65"	91#	$584
EFL2418656S	24"	18"	65"	109#	$776
EFL2424656S	24"	24"	65"	133#	$813
EFL2430656S	24"	30"	65"	165#	$925
EFL3009656S	30"	9"	65"	75#	$590
EFL3012656S	30"	12"	65"	88#	$555
EFL3015656S	30"	15"	65"	103#	$584
EFL3018656S	30"	18"	65"	120#	$781
EFL3024656S	30"	24"	65"	148#	$815
EFL3030656S	30"	30"	65"	182#	$927
EFL3609656S	36"	9"	65"	87#	$590
EFL3612656S	36"	12"	65"	87#	$558
EFL3615656S	36"	15"	65"	114#	$588
EFL3618656S	36"	18"	65"	134#	$781
EFL3624656S	36"	24"	65"	163#	$815
EFL3630656S	36"	30"	65"	201#	$927
EFL4209656S	42"	9"	65"	110#	$625
EFL4212656S	42"	12"	65"	125#	$596
EFL4215656S	42"	15"	65"	142#	$672
EFL4218656S	42"	18"	65"	159#	$826
EFL4224656S	42"	24"	65"	192#	$907
EFL4230656S	42"	30"	65"	232#	$1024
EFL4809656S	48"	9"	65"	124#	$699
EFL4812656S	48"	12"	65"	140#	$696
EFL4815656S	48"	15"	65"	157#	$753
EFL4818656S	48"	18"	65"	178#	$911
EFL4824656S	48"	24"	65"	211#	$1006
EFL4830656S	48"	30"	65"	254#	$1107

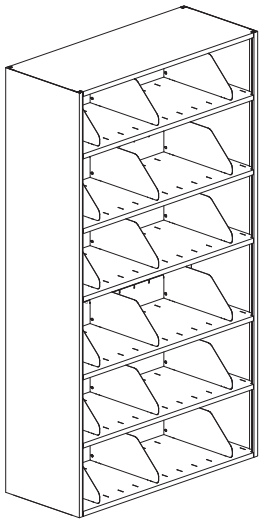

Adder Units with Open "T" Upright / With Closed "T" Upright

Model No.	W	D	H	Wt.	List Price	Model No.	Wt.	List Price
EFO2409656A	24"	9"	65"	55#	$502	**EFT2409656A**	54#	$557
EFO2412656A	24"	12"	65"	60#	$468	**EFT2412656A**	63#	$525
EFO2415656A	24"	15"	65"	64#	$491	**EFT2415656A**	71#	$554
EFO2418656A	24"	18"	65"	74#	$651	**EFT2418656A**	81#	$714
EFO2424656A	24"	24"	65"	86#	$701	**EFT2424656A**	102#	$782
EFO2430656A	24"	30"	65"	105#	$770	**EFT2430656A**	127#	$880
EFO3009656A	30"	9"	65"	64#	$502	**EFT3009656A**	63#	$557
EFO3012656A	30"	12"	65"	69#	$468	**EFT3012656A**	72#	$525
EFO3015656A	30"	15"	65"	76#	$491	**EFT3015656A**	83#	$554
EFO3018656A	30"	18"	65"	86#	$677	**EFT3018656A**	95#	$754
EFO3024656A	30"	24"	65"	101#	$703	**EFT3024656A**	117#	$784
EFO3030656A	30"	30"	65"	122#	$772	**EFT3030656A**	144#	$882
EFO3609656A	36"	9"	65"	75#	$502	**EFT3609656A**	74#	$557
EFO3612656A	36"	12"	65"	80#	$471	**EFT3612656A**	83#	$528
EFO3615656A	36"	15"	65"	87#	$495	**EFT3615656A**	94#	$558
EFO3618656A	36"	18"	65"	99#	$677	**EFT3618656A**	108#	$754
EFO3624656A	36"	24"	65"	116#	$703	**EFT3624656A**	132#	$784
EFO3630656A	36"	30"	65"	141#	$772	**EFT3630656A**	155#	$828
EFO4209656A	42"	9"	65"	99#	$537	**EFT4209656A**	98#	$592
EFO4212656A	42"	12"	65"	101#	$509	**EFT4212656A**	109#	$566
EFO4215656A	42"	15"	65"	115#	$578	**EFT4215656A**	122#	$642
EFO4218656A	42"	18"	65"	126#	$722	**EFT4218656A**	135#	$799
EFO4224656A	42"	24"	65"	145#	$795	**EFT4224656A**	161#	$876
EFO4230656A	42"	30"	65"	172#	$869	**EFT4230656A**	194#	$980
EFO4809656A	48"	9"	65"	113#	$611	**EFT4809656A**	112#	$666
EFO4812656A	48"	12"	65"	121#	$609	**EFT4812656A**	124#	$666
EFO4815656A	48"	15"	65"	130#	$660	**EFT4815656A**	137#	$723
EFO4818656A	48"	18"	65"	144#	$807	**EFT4818656A**	153#	$884
EFO4824656A	48"	24"	65"	164#	$894	**EFT4824656A**	186#	$1041
EFO4830656A	48"	30"	65"	186#	$952	**EFT4830656A**	216#	$1062

9", 12" and 15" are single entry only. 18", 24" and 30" deep are double entry.
DIVIDERS ARE NOT INCLUDED. 3 dividers recommended per shelf. Dividers required for use with common stops. Shelves are 22-gauge.

4-POST SHELVING

76" HEIGHT, SEVEN-TIER COMPLETE ASSEMBLIES

Starter Units with Two Closed "L" Uprights

Model No.	W	D	H	Wt.	List Price
EFL2409767S	24"	9"	76"	77#	$687
EFL2412767S	24"	12"	76"	92#	$646
EFL2415767S	24"	15"	76"	104#	$663
EFL2418767S	24"	18"	76"	112#	$883
EFL2424767S	24"	24"	76"	153#	$950
EFL2430767S	24"	30"	76"	191#	$1081
EFL3009767S	30"	9"	76"	86#	$687
EFL3012767S	30"	12"	76"	102#	$646
EFL3015767S	30"	15"	76"	118#	$663
EFL3018767S	30"	18"	76"	126#	$877
EFL3024767S	30"	24"	76"	171#	$952
EFL3030767S	30"	30"	76"	210#	$1083
EFL3609767S	36"	9"	76"	100#	$687
EFL3612767S	36"	12"	76"	115#	$649
EFL3615767S	36"	15"	76"	131#	$677
EFL3618767S	36"	18"	76"	141#	$877
EFL3624767S	36"	24"	76"	188#	$952
EFL3630767S	36"	30"	76"	232#	$1083
EFL4209767S	42"	9"	76"	127#	$717
EFL4212767S	42"	12"	76"	145#	$695
EFL4215767S	42"	15"	76"	163#	$762
EFL4218767S	42"	18"	76"	172#	$941
EFL4224767S	42"	24"	76"	222#	$1046
EFL4230767S	42"	30"	76"	267#	$1195
EFL4809767S	48"	9"	76"	143#	$801
EFL4812767S	48"	12"	76"	163#	$798
EFL4815767S	48"	15"	76"	181#	$858
EFL4818767S	48"	18"	76"	192#	$1027
EFL4824767S	48"	24"	76"	251#	$1239
EFL4830767S	48"	30"	76"	293#	$1291

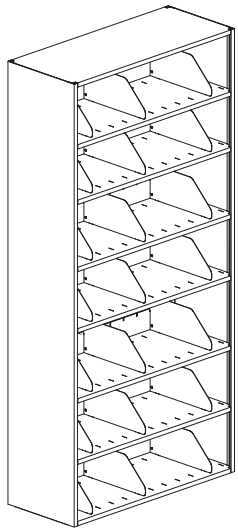

Adder Units with Open "T" Upright / With Closed "T" Upright

Model No.	W	D	H	Wt.	List Price	Model No.	Wt.	List Price
EFO2409767A	24"	9"	76"	63#	$586	**EFT2409767A**	77#	$794
EFO2412767A	24"	12"	76"	69#	$535	**EFT2412767A**	73#	$595
EFO2415767A	24"	15"	76"	73#	$575	**EFT2415767A**	81#	$638
EFO2418767A	24"	18"	76"	86#	$768	**EFT2418767A**	101#	$866
EFO2424767A	24"	24"	76"	98#	$803	**EFT2424767A**	117#	$902
EFO2430767A	24"	30"	76"	121#	$883	**EFT2430767A**	147#	$1007
EFO3009767A	30"	9"	76"	73#	$586	**EFT3009767A**	72#	$644
EFO3012767A	30"	12"	76"	79#	$535	**EFT3012767A**	83#	$595
EFO3015767A	30"	15"	76"	87#	$575	**EFT3015767A**	95#	$638
EFO3018767A	30"	18"	76"	99#	$762	**EFT3018767A**	115#	$860
EFO3024767A	30"	24"	76"	116#	$805	**EFT3024767A**	135#	$904
EFO3030767A	30"	30"	76"	140#	$885	**EFT3030767A**	166#	$1009
EFO3609767A	36"	9"	76"	86#	$586	**EFT3609767A**	86#	$644
EFO3612767A	36"	12"	76"	92#	$538	**EFT3612767A**	96#	$598
EFO3615767A	36"	15"	76"	100#	$579	**EFT3615767A**	108#	$642
EFO3618767A	36"	18"	76"	115#	$762	**EFT3618767A**	130#	$860
EFO3624767A	36"	24"	76"	133#	$805	**EFT3624767A**	152#	$904
EFO3630767A	36"	30"	76"	162#	$885	**EFT3630767A**	188#	$1009
EFO4209767A	42"	9"	76"	114#	$615	**EFT4209767A**	113#	$673
EFO4212767A	42"	12"	76"	122#	$594	**EFT4212767A**	126#	$654
EFO4215767A	42"	15"	76"	132#	$665	**EFT4215767A**	140#	$727
EFO4218767A	42"	18"	76"	146#	$826	**EFT4218767A**	161#	$925
EFO4224767A	42"	24"	76"	167#	$900	**EFT4224767A**	186#	$998
EFO4230767A	42"	30"	76"	197#	$997	**EFT4230767A**	223#	$1121
EFO4809767A	48"	9"	76"	130#	$700	**EFT4809767A**	129#	$758
EFO4812767A	48"	12"	76"	140#	$698	**EFT4812767A**	144#	$758
EFO4815767A	48"	15"	76"	150#	$759	**EFT4815767A**	158#	$822
EFO4818767A	48"	18"	76"	166#	$912	**EFT4818767A**	181#	$1010
EFO4824767A	48"	24"	76"	196#	$1092	**EFT4824767A**	215#	$1190
EFO4830767A	48"	30"	76"	223#	$1093	**EFT4830767A**	249#	$1217

9", 12" and 15" are single entry only. 18", 24" and 30" deep are double entry.
DIVIDERS ARE NOT INCLUDED. 3 dividers recommended per shelf. Dividers required for use with common stops. Shelves are 22-gauge.

4-POST SHELVING

86" HEIGHT, EIGHT-TIER COMPLETE ASSEMBLIES

Starter Units with Two Closed "L" Uprights

Model No.	W	D	H	Wt.	List Price
EFL2409868S	24"	9"	86"	87#	$758
EFL2412868S	24"	12"	86"	103#	$701
EFL2415868S	24"	15"	86"	118#	$752
EFL2418868S	24"	18"	86"	121#	$1024
EFL2424868S	24"	24"	86"	172#	$1070
EFL2430868S	24"	30"	86"	216#	$1199
EFL3009868S	30"	9"	86"	98#	$758
EFL3012868S	30"	12"	86"	114#	$701
EFL3015868S	30"	15"	86"	133#	$752
EFL3018868S	30"	18"	86"	136#	$1029
EFL3024868S	30"	24"	86"	192#	$1072
EFL3030868S	30"	30"	86"	238#	$1201
EFL3609868S	36"	9"	86"	113#	$758
EFL3612868S	36"	12"	86"	129#	$714
EFL3615868S	36"	15"	86"	148#	$756
EFL3618868S	36"	18"	86"	154#	$1029
EFL3624868S	36"	24"	86"	211#	$1072
EFL3630868S	36"	30"	86"	262#	$1201
EFL4209868S	42"	9"	86"	144#	$791
EFL4212868S	42"	12"	86"	163#	$766
EFL4215868S	42"	15"	86"	184#	$853
EFL4218868S	42"	18"	86"	189#	$1090
EFL4224868S	42"	24"	86"	249#	$1179
EFL4230868S	42"	30"	86"	302#	$1328
EFL4809868S	48"	9"	86"	162#	$889
EFL4812868S	48"	12"	86"	183#	$886
EFL4815868S	48"	15"	86"	204#	$956
EFL4818868S	48"	18"	86"	212#	$1187
EFL4824868S	48"	24"	86"	282#	$1398
EFL4830868S	48"	30"	86"	332#	$1437

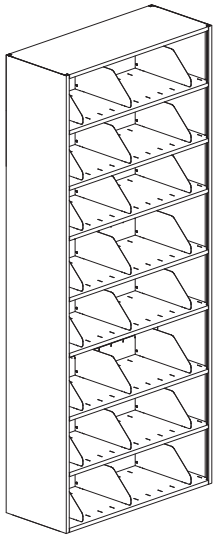

Adder Units with Open "T" Upright / With Closed "T" Upright

Model No.	W	D	H	Wt.	List Price	Model No.	Wt.	List Price
EFO2409868A	24"	9"	86"	71#	$650	**EFT2409868A**	71#	$711
EFO2412868A	24"	12"	86"	77#	$604	**EFT2412868A**	82#	$678
EFO2415868A	24"	15"	86"	83#	$638	**EFT2415868A**	92#	$713
EFO2418868A	24"	18"	86"	95#	$860	**EFT2418868A**	110#	$961
EFO2424868A	24"	24"	86"	111#	$898	**EFT2424868A**	132#	$1007
EFO2430868A	24"	30"	86"	136#	$977	**EFT2430868A**	166#	$1119
EFO3009868A	30"	9"	86"	81#	$650	**EFT3009868A**	82#	$711
EFO3012868A	30"	12"	86"	88#	$604	**EFT3012868A**	93#	$678
EFO3015868A	30"	15"	86"	98#	$638	**EFT3015868A**	127#	$888
EFO3018868A	30"	18"	86"	111#	$864	**EFT3018868A**	152#	$965
EFO3024868A	30"	24"	86"	108#	$900	**EFT3024868A**	152#	$1009
EFO3030868A	30"	30"	86"	158#	$979	**EFT3030868A**	188#	$1121
EFO3609868A	36"	9"	86"	96#	$650	**EFT3609868A**	97#	$711
EFO3612868A	36"	12"	86"	103#	$607	**EFT3612868A**	108#	$681
EFO3615868A	36"	15"	86"	113#	$642	**EFT3615868A**	122#	$718
EFO3618868A	36"	18"	86"	128#	$864	**EFT3618868A**	143#	$965
EFO3624868A	36"	24"	86"	150#	$900	**EFT3624868A**	171#	$1009
EFO3630868A	36"	30"	86"	182#	$979	**EFT3630868A**	212#	$1121
EFO4209868A	42"	9"	86"	128#	$683	**EFT4209868A**	128#	$745
EFO4212868A	42"	12"	86"	137#	$659	**EFT4212868A**	128#	$745
EFO4215868A	42"	15"	86"	149#	$738	**EFT4215868A**	158#	$814
EFO4218868A	42"	18"	86"	164#	$926	**EFT4218868A**	178#	$1026
EFO4224868A	42"	24"	86"	188#	$1007	**EFT4224868A**	209#	$1116
EFO4230868A	42"	30"	86"	222#	$1106	**EFT4230868A**	252#	$1248
EFO4809868A	48"	9"	86"	146#	$780	**EFT4809868A**	146#	$841
EFO4812868A	48"	12"	86"	157#	$778	**EFT4812868A**	162#	$852
EFO4815868A	48"	15"	86"	169#	$846	**EFT4815868A**	178#	$922
EFO4818868A	48"	18"	86"	186#	$1023	**EFT4818868A**	201#	$1124
EFO4824868A	48"	24"	86"	221#	$1226	**EFT4824868A**	242#	$1335
EFO4830868A	48"	30"	86"	252#	$1215	**EFT4830868A**	282#	$1357

9", 12" and 15" are single entry only. 18", 24" and 30" deep are double entry.
DIVIDERS ARE NOT INCLUDED. 3 dividers recommended per shelf. Dividers required for use with common stops. Shelves are 22-gauge.

4-POST SHELVING

97" HEIGHT, NINE-TIER COMPLETE ASSEMBLIES

Starter Units with Two Closed "L" Uprights

Model No.	W	D	H	Wt.	List Price
EFL2409979S	24"	9"	97"	91#	$783
EFL2412979S	24"	12"	97"	116#	$796
EFL2415979S	24"	15"	97"	133#	$833
EFL2418979S	24"	18"	97"	142#	$1135
EFL2424979S	24"	24"	97"	190#	$1191
EFL2430979S	24"	30"	97"	241#	$1257
EFL3009979S	30"	9"	97"	111#	$848
EFL3012979S	30"	12"	97"	128#	$796
EFL3015979S	30"	15"	97"	150#	$833
EFL3018979S	30"	18"	97"	159#	$1139
EFL3024979S	30"	24"	97"	214#	$1193
EFL3030979S	30"	30"	97"	263#	$1318
EFL3609979S	36"	9"	97"	126#	$848
EFL3612979S	36"	12"	97"	142#	$799
EFL3615979S	36"	15"	97"	169#	$837
EFL3618979S	36"	18"	97"	178#	$1139
EFL3624979S	36"	24"	97"	236#	$1193
EFL3630979S	36"	30"	97"	293#	$1318
EFL4209979S	42"	9"	97"	161#	$885
EFL4212979S	42"	12"	97"	183#	$857
EFL4215979S	42"	15"	97"	207#	$945
EFL4218979S	42"	18"	97"	218#	$1207
EFL4224979S	42"	24"	97"	279#	$1312
EFL4230979S	42"	30"	97"	338#	$1459
EFL4809979S	48"	9"	97"	181#	$993
EFL4812979S	48"	12"	97"	205#	$992
EFL4815979S	48"	15"	97"	230#	$1066
EFL4818979S	48"	18"	97"	243#	$1315
EFL4824979S	48"	24"	97"	315#	$1559
EFL4830979S	48"	30"	97"	370#	$1583

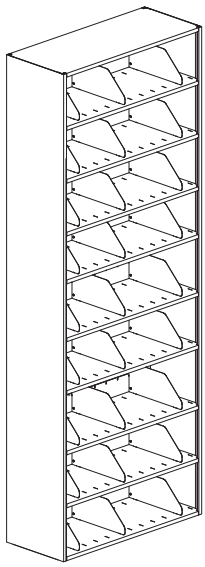

Adder Units with Open "T" Upright / With Closed "T" Upright

Model No.	W	D	H	Wt.	List Price	Model No.	Wt.	List Price
EFO2409979A	24"	9"	97"	80#	$714	**EFT2409979A**	77#	$787
EFO2412979A	24"	12"	97"	86#	$664	**EFT2412979A**	92#	$751
EFO2415979A	24"	15"	97"	92#	$700	**EFT2415979A**	103#	$788
EFO2418979A	24"	18"	97"	107#	$947	**EFT2418979A**	115#	$1062
EFO2424979A	24"	24"	97"	121#	$989	**EFT2424979A**	147#	$1112
EFO2430979A	24"	30"	97"	150#	$1076	**EFT2430979A**	129#	$1232
EFO3009979A	30"	9"	97"	92#	$714	**EFT3009979A**	91#	$787
EFO3012979A	30"	12"	97"	98#	$664	**EFT3012979A**	104#	$751
EFO3015979A	30"	15"	97"	109#	$700	**EFT3015979A**	120#	$788
EFO3018979A	30"	18"	97"	124#	$952	**EFT3018979A**	132#	$1066
EFO3024979A	30"	24"	97"	143#	$991	**EFT3024979A**	169#	$1114
EFO3030979A	30"	30"	97"	175#	$1078	**EFT3030979A**	210#	$1234
EFO3609979A	36"	9"	97"	109#	$714	**EFT3609979A**	108#	$787
EFO3612979A	36"	12"	97"	115#	$667	**EFT3612979A**	121#	$754
EFO3615979A	36"	15"	97"	126#	$704	**EFT3615979A**	137#	$792
EFO3618979A	36"	18"	97"	143#	$952	**EFT3618979A**	151#	$1066
EFO3624979A	36"	24"	97"	165#	$991	**EFT3624979A**	191#	$1114
EFO3630979A	36"	30"	97"	202#	$1078	**EFT3630979A**	237#	$1234
EFO4209979A	42"	9"	97"	144#	$752	**EFT4209979A**	143#	$825
EFO4212979A	42"	12"	97"	153#	$725	**EFT4212979A**	159#	$812
EFO4215979A	42"	15"	97"	166#	$794	**EFT4215979A**	177#	$901
EFO4218979A	42"	18"	97"	183#	$1020	**EFT4218979A**	191#	$1135
EFO4224979A	42"	24"	97"	208#	$1111	**EFT4224979A**	234#	$1233
EFO4230979A	42"	30"	97"	247#	$1220	**EFT4230979A**	282#	$1376
EFO4809979A	48"	9"	97"	164#	$860	**EFT4809979A**	163#	$933
EFO4812979A	48"	12"	97"	175#	$858	**EFT4812979A**	181#	$945
EFO4815979A	48"	15"	97"	189#	$933	**EFT4815979A**	200#	$1022
EFO4818979A	48"	18"	97"	208#	$1129	**EFT4818979A**	216#	$1243
EFO4824979A	48"	24"	97"	244#	$1357	**EFT4824979A**	270#	$1479
EFO4830979A	48"	30"	97"	279#	$1343	**EFT4830979A**	314#	$1499

9", 12" and 15" are single entry only. 18", 24" and 30" deep are double entry.
DIVIDERS ARE NOT INCLUDED. 3 dividers recommended per shelf. Dividers required for use with common stops. Shelves are 22-gauge.

4-POST SHELVING

COMPONENTS

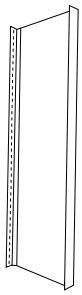

Closed "L"-Uprights

Model No.	D	Wt.	List Price	Model No.	D	Wt.	List Price
43" Height				**86" Height**			
EF0943L	9"	8#	$79	**EF0986L**	9"	16#	$94
EF1243L	12"	11#	$79	**EF1286L**	12"	21#	$94
EF1543L	15"	13#	$83	**EF1586L**	15"	26#	$100
EF1843L	18"	16#	$89	**EF1886L**	18"	33#	$131
EF2443L	24"	20#	$94	**EF2486L**	24"	40#	$135
EF3043L	30"	25#	$109	**EF3086L**	30"	50#	$163
65" Height				**97" Height**			
EF0965L	9"	12#	$79	**EF0997L**	9"	18#	$106
EF1265L	12"	16#	$79	**EF1297L**	12"	24#	$106
EF1565L	15"	20#	$83	**EF1597L**	15"	30#	$109
EF1865L	18"	24#	$99	**EF1897L**	18"	35#	$142
EF2465L	24"	31#	$103	**EF2497L**	24"	45#	$150
EF3065L	30"	38#	$126	**EF3097L**	30"	56#	$172
76" Height							
EF0976L	9"	14#	$90				
EF1276L	12"	19#	$90				
EF1576L	15"	23#	$92				
EF1876L	18"	29#	$104				
EF2476L	24"	36#	$121				
EF3076L	30"	44#	$154				

Closed "T"-Uprights

Model No.	D	Wt.	List Price	Model No.	D	Wt.	List Price
43" Height				**86" Height**			
EF0943T	9"	8#	$125	**EF0986T**	9"	16#	$140
EF1243T	12"	11#	$128	**EF1286T**	12"	21#	$154
EF1543T	15"	13#	$136	**EF1586T**	15"	26#	$161
EF1843T	18"	16#	$158	**EF1886T**	18"	31#	$199
EF2443T	24"	20#	$165	**EF2486T**	24"	40#	$207
EF3043T	30"	25#	$191	**EF3086T**	30"	50#	$246
65" Height				**97" Height**			
EF0965T	9"	12#	$125	**EF0997T**	9"	18#	$152
EF1265T	12"	16#	$128	**EF1297T**	12"	24#	$167
EF1565T	15"	20#	$136	**EF1597T**	15"	30#	$174
EF1865T	18"	25#	$171	**EF1897T**	18"	37#	$212
EF2465T	24"	31#	$175	**EF2497T**	24"	45#	$220
EF3065T	30"	38#	$207	**EF3097T**	30"	56#	$260
76" Height							
EF0976T	9"	14#	$137				
EF1276T	12"	19#	$140				
EF1576T	15"	23#	$148				
EF1876T	18"	31#	$191				
EF2476T	24"	36#	$193				
EF3076T	30"	44#	$234				

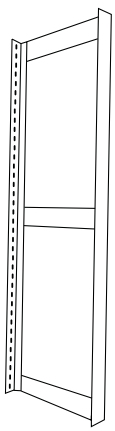

Open Uprights (OP)

Model No.	D	Wt.	List Price	Model No.	D	Wt.	List Price
43" Height				**86" Height**			
EF0943OP	9"	8 1/2#	$70	**EF0986OP**	9"	16#	$79
EF1243OP	12"	8 3/4#	$71	**EF1286OP**	12"	16 1/2#	$80
EF1543OP	15"	9#	$73	**EF1586OP**	15"	17#	$85
EF1843OP	18"	9 1/4#	$94	**EF1886OP**	18"	17 1/2#	$98
EF2443OP	24"	9 1/2#	$94	**EF2486OP**	24"	19#	$98
EF3043OP	30"	9 3/4#	$97	**EF3086OP**	30"	20#	$104
65" Height				**97" Height**			
EF0965OP	9"	13#	$70	**EF0997OP**	9"	16#	$79
EF1265OP	12"	13 1/4#	$71	**EF1297OP**	12"	16 1/2#	$80
EF1565OP	15"	13 1/2#	$73	**EF1597OP**	15"	17#	$85
EF1865OP	18"	13 3/4#	$94	**EF1897OP**	18"	17 1/2#	$98
EF2465OP	24"	15#	$94	**EF2497OP**	24"	19#	$98
EF3065OP	30"	16#	$97	**EF3097OP**	30"	20#	$104
76" Height							
EF0976OP	9"	15#	$79				
EF1276OP	12"	15 1/4#	$80				
EF1576OP	15"	15 1/2#	$85				
EF1876OP	18"	16#	$93				
EF2476OP	24"	17#	$95				
EF3076OP	30"	18#	$110				

4-POST SHELVING

COMPONENTS

Slotted Shelves (SLF) – 22-Gauge

Model No.	D	Wt.	List Price
24" Width			
EF2409S	9"	2 1/2#	$30
EF2412S	12"	3 1/4#	$25
EF2415S	15"	3 3/4#	$28
EF2418S	18"	4 1/2#	$46
EF2424S	24"	5 3/4#	$46
EF2430S	30"	7#	$51
30" Width			
EF3009S	9"	3#	$30
EF3012S	12"	3 3/4#	$25
EF3015S	15"	4 3/4#	$28
EF3018S	18"	5 1/2#	$46
EF3024S	24"	7 1/4#	$46
EF3030S	30"	8 3/4#	$51
36" Width			
EF3609S	9"	3 3/4#	$30
EF3612S	12"	4 1/2#	$25
EF3615S	15"	5 1/2#	$28
EF3618S	18"	6 1/2#	$46
EF3624S	24"	8 1/2#	$46
EF3630S	30"	10 1/2#	$51
42" Width			
EF4209S	9"	4 1/4#	$33
EF4212S	12"	5 1/4#	$30
EF4215S	15"	6 1/2#	$38
EF4218S	18"	7 1/2#	$52
EF4224S	24"	9 3/4#	$57
EF4230S	30"	12#	$64
48" Width			
EF4809S	9"	4 3/4#	$38
EF4812S	12"	6#	$38
EF4815S	15"	7 1/4#	$45
EF4818S	18"	8 1/2#	$57
EF4824S	24"	11#	$67
EF4830S	30"	13 3/4#	$72

Note: Order two supports per shelf. Shelves are slotted to accept dividers on 3" centers/increments.

Unslotted Shelves, or Canopy Top (SU) – 22-Gauge

Model No.	D	Wt.	List Price
24" Width			
EF2409U	9"	2 1/2#	$30
EF2412U	12"	3 1/4#	$25
EF2415U	15"	3 3/4#	$28
EF2418U	18"	4 1/2#	$38
EF2424U	24"	5 3/4#	$43
EF2430U	30"	7#	$49
30" Width			
EF3009U	9"	3#	$30
EF3012U	12"	3 3/4#	$25
EF3015U	15"	4 3/4#	$28
EF3018U	18"	5 1/2#	$43
EF3024U	24"	7 1/4#	$45
EF3030U	30"	8 3/4#	$51
36" Width			
EF3609U	9"	3 3/4#	$30
EF3612U	12"	4 1/2#	$28
EF3615U	15"	5 1/2#	$32
EF3618U	18"	6 1/2#	$43
EF3624U	24"	8 1/2#	$45
EF3630U	30"	10 1/2#	$51
42" Width			
EF4209U	9"	4 1/4#	$30
EF4212U	12"	5 1/4#	$30
EF4215U	15"	6 1/2#	$37
EF4218U	18"	7 1/2#	$46
EF4224U	24"	9 3/4#	$52
EF4230U	30"	12#	$61
48" Width			
EF4809U	9"	4 3/4#	$37
EF4812U	12"	6#	$34
EF4815U	15"	7 1/4#	$41
EF4818U	18"	8 1/2#	$53
EF4824U	24"	11#	$56
EF4830U	30"	13 3/4#	$63

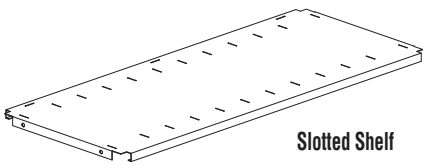
Slotted Shelf

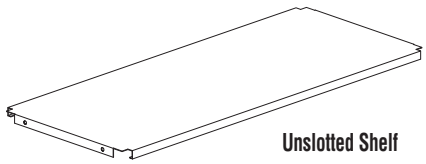
Unslotted Shelf

4-POST SHELVING

COMPONENTS

Slotted Shelves (SLS) – 18-Gauge

Model No.	D	Wt.	List Price
24" Width			
EF2409S18GA	9"	4#	$48
EF2412S18GA	12"	5#	$54
EF2415S18GA	15"	5 3/4#	$55
EF2418S18GA	18"	7#	$56
EF2424S18GA	24"	9 1/4#	$113
EF2430S18GA	30"	11 1/2#	$116
30" Width			
EF3009S18GA	9"	4 3/4#	$49
EF3012S18GA	12"	6#	$55
EF3015S18GA	15"	7 1/2#	$56
EF3018S18GA	18"	8 3/4#	$57
EF3024S18GA	24"	11 1/4#	$116
EF3030S18GA	30"	14#	$119
36" Width			
EF3609S18GA	9"	5 3/4#	$49
EF3612S18GA	12"	7 1/4#	$55
EF3615S18GA	15"	8 3/4#	$56
EF3618S18GA	18"	10 1/4#	$61
EF3624S18GA	24"	13 1/2#	$116
EF3630S18GA	30"	16 1/2#	$119
42" Width			
EF4209S18GA	9"	6 1/2#	$56
EF4212S18GA	12"	8 1/2#	$58
EF4215S18GA	15"	10 1/4#	$61
EF4218S18GA	18"	12#	$63
EF4224S18GA	24"	15 1/2#	$120
EF4230S18GA	30"	19 1/4#	$121
48" Width			
EF4809S18GA	9"	7 1/2#	$58
EF4812S18GA	12"	9 1/2#	$61
EF4815S18GA	15"	11 1/2#	$62
EF4818S18GA	18"	13 3/4#	$64
EF4824S18GA	24"	17 3/4#	$122
EF4830S18GA	30"	21 3/4#	$124

Note: Order two supports per shelf. Shelves are slotted to accept dividers on 3" centers/increments.

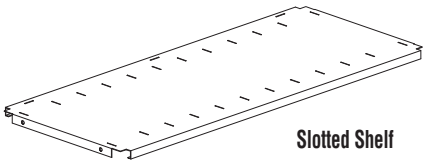

Slotted Shelf

Unslotted Shelves, or Canopy Top (SU) – 18-Gauge

Model No.	D	Wt.	List Price
24" Width			
EF2409U18GA	9"	4#	$45
EF2412U18GA	12"	5#	$49
EF2415U18GA	15"	5 3/4#	$51
EF2418U18GA	18"	7#	$53
EF2424U18GA	24"	9 1/4#	$89
EF2430U18GA	30"	11 1/2#	$92
EF2436U18GA	36"	13 1/4#	$106
30" Width			
EF3009U18GA	9"	4 3/4#	$47
EF3012U18GA	12"	6#	$52
EF3015U18GA	15"	7 1/2#	$56
EF3018U18GA	18"	8 3/4#	$56
EF3024U18GA	24"	11 1/4#	$113
EF3030U18GA	30"	14#	$116
EF3036U18GA	36"	16 1/2#	$119
36" Width			
EF3609U18GA	9"	5 3/4#	$47
EF3612U18GA	12"	7 1/4#	$55
EF3615U18GA	15"	8 3/4#	$56
EF3618U18GA	18"	10 1/4#	$61
EF3624U18GA	24"	13 1/2#	$116
EF3630U18GA	30"	16 1/2#	$119
EF3636U18GA	36"	19 1/2#	$121
42" Width			
EF4209U18GA	9"	6 1/2#	$52
EF4212U18GA	12"	8 1/2#	$57
EF4215U18GA	15"	10 1/4#	$58
EF4218U18GA	18"	12#	$61
EF4224U18GA	24"	15 1/2#	$118
EF4230U18GA	30"	19 1/4#	$119
EF4236U18GA	36"	22 3/4#	$121
48" Width			
EF4809U18GA	9"	7 1/2#	$54
EF4812U18GA	12"	9 1/2#	$61
EF4815U18GA	15"	11 1/2#	$62
EF4818U18GA	18"	13 3/4#	$58
EF4824U18GA	24"	17 3/4#	$120
EF4830U18GA	30"	21 3/4#	$119
EF4836U18GA	36"	26#	$121

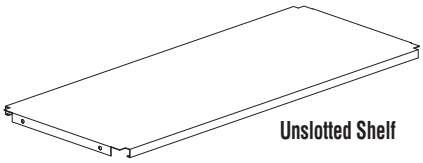

Unslotted Shelf

Common Stops (CS)

Model No.	W	H	Wt.	List Price
EF24CS	24"	3 1/2"	1 1/4#	$9
EF30CS	30"	3 1/2"	1 1/2#	$9
EF36CS	36"	3 1/2"	1 1/2#	$9
EF42CS	42"	3 1/2"	1 3/4#	$10
EF48CS	48"	3 1/2"	2#	$10

Note: Dividers are required when using common stops.

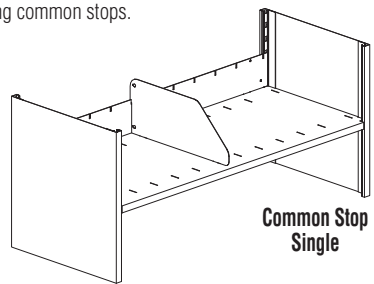

Common Stop Single

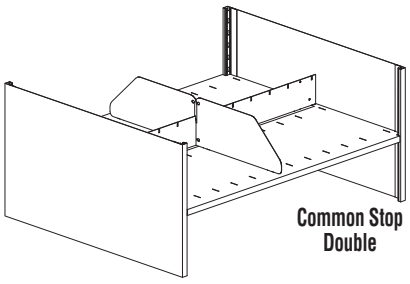

Common Stop Double

COMPONENTS

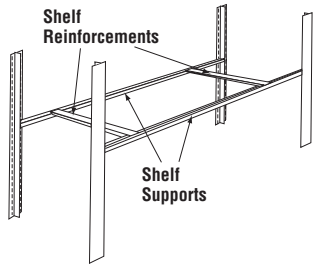

	24"	30"	36"	42"	48"
18"	1	1	1	1	2
24"	1	1	1	1	2
30"	2	2	2	2	2
36"	2	2	2	3	3

Number of Shelf Reinforcements required per loaded shelf.

Shelf Supports (SS)

Model No.	W	H	Wt.	List Price
EF2414SS	24"	3/4"	1 1/5#	$12
EF2414SSPT	24"	3/4"	1 1/5#	$19
EF2411SS	24"	3/4"	1 4/5#	$12
EF2411SSPT	24"	3/4"	1 1/5#	$19
EF3014SS	30"	3/4"	1 4/5#	$12
EF3014SSPT	30"	3/4"	1 2/5#	$19
EF3011SS	30"	3/4"	2 1/4#	$11
EF3011SSPT	30"	3/4"	2 1/4#	$19
EF3614SS	36"	3/4"	1 2/3#	$12
EF3614SSPT	36"	3/4"	1 2/3#	$19
EF3611SS	36"	3/4"	2 5/7#	$12
EF3611SSPT	36"	3/4"	2 5/7#	$19
EF4211SS	42"	3/4"	3 1/5#	$12
EF4211SSPT	42"	3/4"	3 1/5#	$19
EF4811SS	48"	3/4"	3 2/3#	$16
EF4811SSPT	48"	3/4"	3 2/3#	$19

Note: Shelf supports are not interchangeable with bottom shelf supports. Pebble Gray only.

Shelf Support Bottom (SSB)

EF2414SSB	24"	3/4"	1 3/4#	$12
EF2411SSB	24"	3/4"	3 2/3#	$18
EF3014SSB	30"	3/4"	1 2/5#	$12
EF3011SSB	30"	3/4"	2 1/4#	$18
EF3614SSB	36"	3/4"	1 3/4#	$12
EF3611SSB	36"	3/4"	2 5/7#	$18
EF4214SSB	42"	3/4"	1 3/4#	$12
EF4211SSB	42"	3/4"	3 1/4#	$18
EF4814SSB	48"	3/4"	2 1/4#	$12
EF4811SSB	48"	3/4"	3 2/3#	$18

Note: Bottom shelf must be supported by bottom shelf supports when mounted on a mobile carriage. Graphite only.

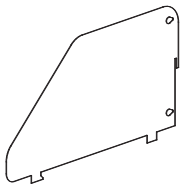

Shelf Reinforcements (SR) – Pebble Gray only.

Model No.	W	H	Wt.	List Price
F18SR	18"	3/4"	3/4#	$7
F24SR	24"	3/4"	1#	$11
F30SR	30"	3/4"	1 1/4#	$7

Note: Pebble Gray only.

Shelf Reinforcements (SRA) – Indicate color to match system.

Model No.	W	H	Wt.	List Price
F18SRA	18"	3/4"	3/4#	$8
F24SRA	24"	3/4"	1#	$15
F30SRA	30"	3/4"	1 1/4#	$15

Adjustable File Dividers (DV)

Standard Pack of 6:

Model No.	W	H	Wt.	List Price
F09DV6	9"	6"	3#	$56
F12DV6	12"	6"	3 1/2#	$37
F15DV6	15"	6"	4 1/2#	$43

Standard Pack of 24:

Model No.	W	H	Wt.	List Price
F09DV24	9"	6"	12 1/2#	$222
F12DV24	12"	6"	13 1/2#	$148
F15DV24	15"	6"	17 1/2#	$168

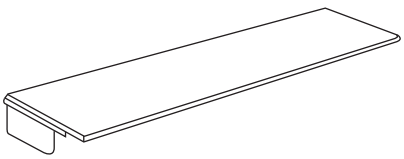

Pullout Reference Shelves (RS)

Model No.	W	D	Wt.	List Price
EF24RS	24"	12"	14 1/2#	$222
EF30RS	30"	12"	17 1/4#	$236
EF36RS	36"	12"	20#	$250
EF42RS	42"	12"	22#	$263
EF48RS	48"	12"	25 3/4#	$276

Note: Reference shelves cannot be used in conjunction with either the Security Shade or Kick Plates.

Base Kick Plates (KP)

To be used with standard shelf supports on bottom shelf and slightly raises height of bottom shelf.

Model No.	W	D	Wt.	List
PriceEF2402KP	24"	2"	1 1/8#	$18
EF2406KP	24"	6"	2 3/4#	$32
EF3002KP	30"	2"	1 1/4#	$21
EF3006KP	30"	6"	3 1/4#	$37
EF3602KP	36"	2"	2#	$21
EF3606KP	36"	6"	4#	$37
EF4202KP	42"	2"	2 1/4#	$27
EF4206KP	42"	6"	4 3/4#	$40
EF4802KP	48"	2"	2 1/2#	$28
EF4806KP	48"	6"	5 1/2#	$45

Note: Kick Plates cannot be used in conjunction with Reference Shelves.

4-POST SHELVING

WIRE SHELVING

Zinc-plated shelving (NSF-listed) for dry storage only.

Wire Shelves

Model No.	W	Wt.	List Price
12" Depth			
WS1224Z	24"	5#	$118
WS1236Z	36"	7#	$129
WS1242Z	42"	8#	$153
WS1248Z	48"	10#	$161
15" Depth			
WS1530Z	30"	7#	$118
WS1536Z	36"	8#	$129
WS1542Z	42"	9#	$153
WS1548Z	48"	10#	$161
18" Depth			
WS1830Z	30"	8#	$127
WS1836Z	36"	9#	$139
WS1842Z	42"	11#	$158
WS1848Z	48"	12#	$167
24" Depth			
WS2430Z	30"	11#	$158
WS2436Z	36"	13#	$161
WS2442Z	42"	15#	$193
WS2448Z	48"	16#	$201
30" Depth			
WS3030Z	30"	14#	$185
WS3036Z	36"	17#	$193
WS3042Z	42"	19#	$220
WS3048Z	48"	20#	$239
36" Depth			
WS3636Z	36"	18#	$231
WS3642Z	42"	22#	$252
WS3648Z	48"	24#	$264

Optional Center Stop Assemblies

Model No.	W	Wt.	List Price
12" Depth			
WSD1224Z	24"	2#	$145
WSD1236Z	36"	2#	$158
WSD1242Z	42"	2#	$171
WSD1248Z	48"	2 1/8#	$207
15" Depth			
WSD1530Z	30"	2 1/8#	$203
WSD1536Z	36"	2 1/8#	$257
WSD1542Z	42"	2 1/4#	$268
WSD1548Z	48"	2 1/4#	$283
18" Depth			
WSD1830Z	30"	2 1/4#	$213
WSD1836Z	36"	2 1/4#	$266
WSD1842Z	42"	2 3/8#	$274
WSD1848Z	48"	2 3/8#	$292
24" Depth			
WSD2430Z	30"	2 3/8#	$235
WSD2436Z	36"	2 3/8#	$287
WSD2442Z	42"	2 1/2#	$297
WSD2448Z	48"	2 1/2#	$310
30" Depth			
WSD3030Z	30"	2 1/2#	$255
WSD3036Z	36"	2 1/2#	$308
WSD3042Z	42"	2 1/2#	$320
WSD3048Z	48"	2 1/2#	$333
36" Depth			
WSD3636Z	36"	2 1/2#	$373
WSD3642Z	42"	2 3/4#	$389
WSD3648Z	48"	2 3/4#	$401

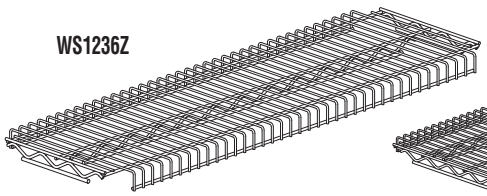
WS1236Z

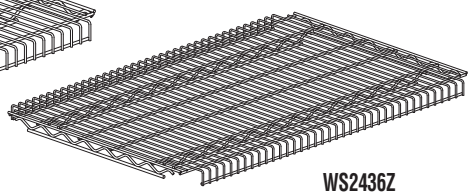
WS2436Z

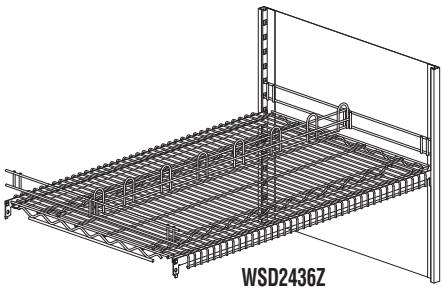
WSD2436Z

Additional Side-to-Side Partitions for Optional Center Stop Assemblies

Model No.	W	Wt.	List Price
WSA219390	30"	1 7/8#	$94
WSA219391	36"	1 7/8#	$145
WSA219392	42"	2#	$158
WSA219393	48"	2#	$167

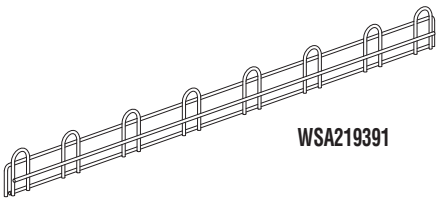
WSA219391

Shelf Supports for Wire Shelving – Painted Steel

Model No.	W	Wt.	List Price
EF2414WSSS	24"	1 1/4#	$22
EF3014WSSS	30"	1 3/8#	$22
EF3614WSSS	36"	1 3/4#	$22
EF4211WSSS	42"	3 1/4#	$22
EF4811WSSS	48"	3 5/8#	$22

Shelf Bottom Supports for Wire Shelving – Painted Steel

Model No.	W	Wt.	List Price
EF24WSB	24"	2 1/4#	$28
EF30WSB	30"	2 3/4#	$28
EF36WSB	36"	3 3/8#	$29
EF42WSB	42"	4#	$33
EF48WSB	48"	4 5/8#	$33

4-POST SHELVING

SECURITY COMPONENTS

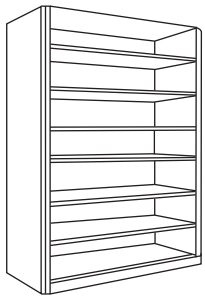

Back Security Panels (BP)

Used to enclose the back of a single faced unit.

Model No.	W	H	Wt.	List Price
EF2443BP	24"	43"	11#	$214
EF3043BP	30"	43"	13 3/4#	$217
EF3643BP	36"	43"	16 1/4#	$218
EF4243BP	42"	43"	19#	$220
EF4843BP	48"	43"	21 3/4#	$231
EF2465BP	24"	65"	16 1/2#	$239
EF3065BP	30"	65"	20 1/2#	$241
EF3665BP	36"	65"	24 3/4#	$241
EF4265BP	42"	65"	29#	$248
EF4865BP	48"	65"	33#	$250
EF2476BP	24"	76"	19 1/4#	$245
EF3076BP	30"	76"	24#	$248
EF3676BP	36"	76"	28 3/4#	$248
EF4276BP	42"	76"	33 1/2#	$253
EF4876BP	48"	76"	38 1/4#	$271
EF2486BP	24"	86"	21 3/4#	$245
EF3086BP	30"	86"	27 1/4#	$257
EF3686BP	36"	86"	38 1/2#	$257
EF4286BP	42"	86"	38#	$280
EF4886BP	48"	86"	43 1/2#	$303
EF2497BP	24"	97"	24 1/4#	$297
EF3097BP	30"	97"	30 1/2#	$303
EF3697BP	36"	97"	36 1/2#	$303
EF4297BP	42"	97"	42 3/4#	$343
EF4897BP	48"	97"	48 3/4#	$356

Note: Back security panels are designed as one full piece with no visible hardware. All panels ship in a crate. No additional upcharge for crating.

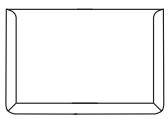

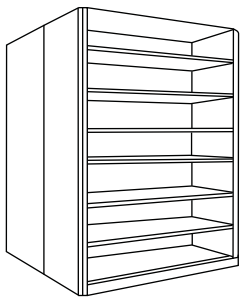

Card Holders (CH) – Standard Pack of 5:

Model No.	W	D	Wt.	List Price
A35CH5	5"	3"	2 1/2#	$130

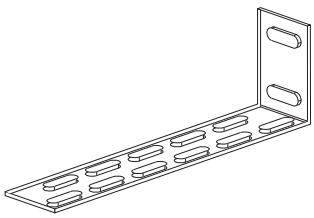

Wall Mounting Kit (WMK)

Used to secure shelving to wall. Two brackets sold as pair. Anchoring hardware not included; to be purchased by installer.

Model No.	Wt.	List Price
AWMK	2#	$51

Center Panels (CP)

Used to close the center of back-to-back single faced units. Cannot be used with Four-Post double-faced shelving.

EF2443CP	24"	43"	11#	$217
EF3043CP	30"	43"	13 3/4#	$223
EF3643CP	36"	43"	16 1/4#	$223
EF4243CP	42"	43"	19#	$229
EF4843CP	48"	43"	21 3/4#	$232
EF2465CP	24"	65"	16 1/2#	$236
EF3065CP	30"	65"	20 1/2#	$241
EF3665CP	36"	65"	24 3/4#	$241
EF4265CP	42"	65"	29#	$248
EF4865CP	48"	65"	33#	$250
EF2476CP	24"	76"	19 1/4#	$241
EF3076CP	30"	76"	24#	$248
EF3676CP	36"	76"	28 3/4#	$248
EF4276CP	42"	76"	33 1/2#	$253
EF4876CP	48"	76"	38 1/2#	$271
EF2486CP	24"	86"	21 1/4#	$250
EF3086CP	30"	86"	27 1/4#	$257
EF3686CP	36"	86"	32 1/2#	$257
EF4286CP	42"	86"	38#	$280
EF4886CP	48"	86"	43 1/2#	$303
EF2497CP	24"	97"	24 1/4#	$272
EF3097CP	30"	97"	30 1/2#	$303
EF3697CP	36"	97"	36 1/2#	$303
EF4297CP	42"	97"	42 3/4#	$343
EF4897CP	48"	97"	48 3/4#	$356

Note: Center panels are designed as one full piece with no visible hardware. All panels ship in a crate. No additional upcharge for crating.

4-POST ROLL OUT DRAWER TYPICALS

To increase the versatility of 4-Post shelving, Mayline has added Roll Out Drawer and Slatwall options. These options, in addition to our current shelving offer nearly unlimited solutions to meet your specific storage needs. 4-Post can now be used for weapons storage, backroom inventory, tools, medical supplies, or you can transfer your lateral files to 4-Post using roll out drawers. There are multiple accessories available to use with Slatwall for almost any storage requirement. When combined with our Mobile 1000 System, these options can be used to store almost anything efficiently.

Call 1-800-822-8037 or email spaceplanning @ mayline .com for FREE DESIGN SERVICE to recommend the best solutions for your storage requirements.

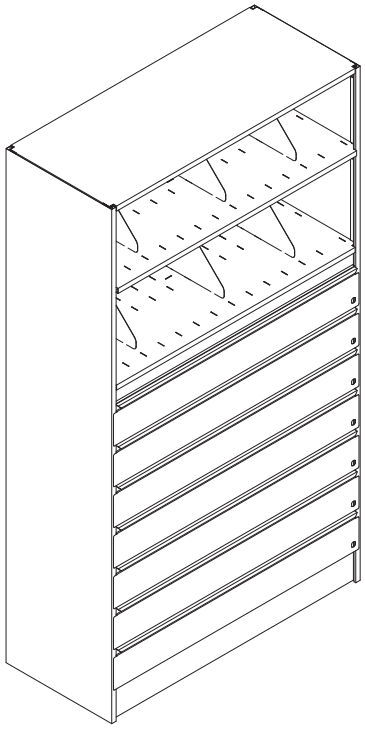

4-POST TYPICAL #1

Four-Post Starter 36" x 76" x 18" with 7 - 6" drawers with three drawer partitions and one partition support per drawer; two shelves with dividers.

EFSR367676S **List Price: $5348**

4-Post Adder 36" x 76" x 18" with 7 - 6" drawers; two shelves with dividers.

EFSR367676A **List Price: $5281**

One starter unit and number of required adder units are required if more than one 36" shelving unit is required side-by-side.

Additional partitions available.

FPA6P **List Price: $34**

* Unit requires anchoring to the wall or floor.
See wall anchor brackets page 258 for ordering information.

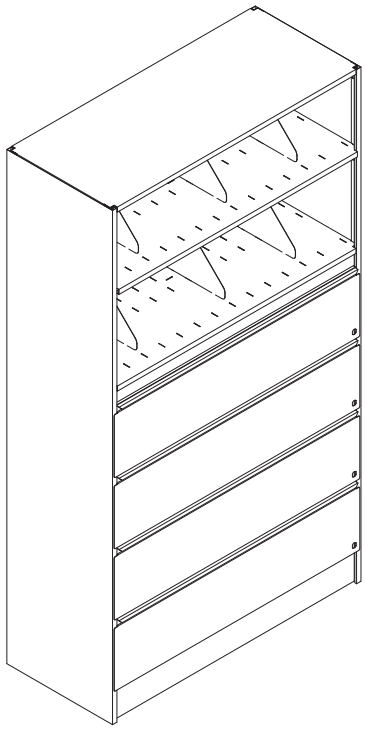

4-POST TYPICAL #2

Four-Post Starter 36" x 76" x 18" with 4 - 10 1/2" drawers; two shelves with dividers.

EFSR3676410S **List Price: $3114**

4-Post Adder 36" x 76" x 18" with 4 - 10 1/2" drawers; two shelves with dividers.

EFSR3676410A **List Price: $3097**

One starter unit and number of required adder units are required if more than one 36" shelving unit is required side-by-side.

* Unit requires anchoring to the wall or floor.
See wall anchor brackets page 258 for ordering information.

4-POST SHELVING

SPECIFICATIONS

Actual Width Dimensions

Stationary or Mobile			Mobile Only		
Nominal Shelf Width	(LFI) Usable Space/Shelf	Add for End Actual Unit Width	Add for End Panel Panel Assembly (Fix & Manual)	Add for Assembly w/Handle (1000 Systems)	Clearance at Rear Wall
2422 5/8"	24"	3 3/4"	8"	1"	
3028 5/8"	30"	3 3/4"	8"	1"	
3634 5/8"	36"	3 3/4"	8"	1"	
42	40 5/8"	42"	3 3/4"	8"	1"
48	46 5/8"	48"	3 3/4"	8"	1"

Actual Height Dimensions

	43"	65"	76"	86"	97"
Upright	42 5/16"	65 5/16"	75 13/16"	86 5/16"	96 13/16"
Base & Track	N/A	6 1/4"	6 1/4"	6 1/4"	6 1/4"
Overall	N/A	71 9/16"	82 1/16"	92 9/16"	103 1/16"

Actual Base Dimensions (Base Depth*)

Nominal Shelf Depth	Fixed*	Manual or 1000
9	N/A	N/A
12	12"	19"
15	15"	19"
18	18"	19"
24	24"	25"
30	30"	31"
36	36"	37"

*Depth includes the 1" bumpers.

Steel Material Gauges:

Shelf	18 & 22	Shelf Reinforcement	14
Upright	18	Base Skirts	12
End Panel	20	Wheel Channel	18
Dividers	20	Shaft Diameter	3/4"
Shelf Support	14 & 11	Wheel Diameter	4 5/8"

Media Weight:

Letter Size Material:	2# per LFI
Legal Size Material:	3# per LFI

NOTE: EACH SHELF HAS A MAXIMUM WEIGHT CAPACITY OF 240 LBS. MEDIA WEIGHT MUST BE EVENLY DISTRIBUTED BOTH VERTICALLY AND HORIZONTALLY.

CONFIGURATION GUIDE

Configuration Guide for Mixed Media Applications

Media	Description	Clearance Space	Upright Space Required
	Letter/Legal Side Tab	9 3/4"	10 1/2"
	Letter/Legal Standard Top Tab, 1/3 cut	11 1/4"	12"
	3-Ring Binders	12 3/4"	13 1/2"

To determine the height of a unit with media not listed above, first determine the height of the media and add 3/4". Then, round that figure up to the next number divisible by 1 1/2" (because the uprights are slotted on 1 1/2" centers), then multiply that number by the number of tiers desired. Then add 1 1/2" for space that is alotted for the reference shelf. Lastly, add 3/4" for the canopy.

Media Storage Capacities

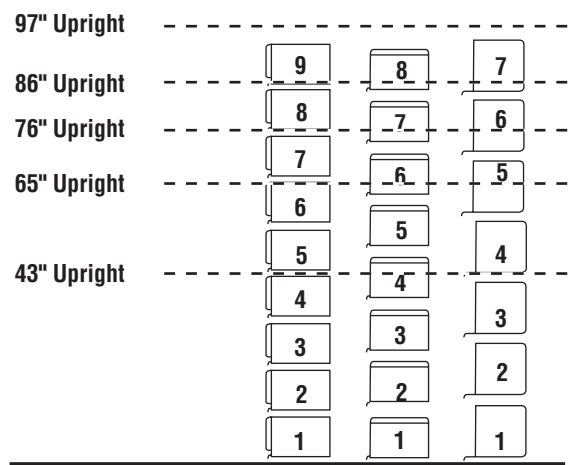

	Letter/ Legal Side Tab	Letter/ Std. Top Tab	3-Ring Binders
97" Upright	9	8	7
86" Upright	8	7	6
76" Upright	7	6	5
65" Upright	6	5	4
43" Upright	4	3	3

FOUR-POST SHELVING ON KWIK-TRACK – LETTER DEPTH

GSA

Intertek

To increase filing density, 4-Post Shelving can also mount to the Kwik-Track system creating either a bi-file or tri-file lateral sliding shelving system. In either configuration, the rear row of shelves are stationary with shelves in front mounted into a sliding carriage on a track mounted to the floor.

- Heavy-duty aluminum track construction supports 3,500# per carriage.
- Anti-tip built into base for stability and easy installation.
- Systems are complete with shelving and track systems. **Dividers are not included.** (see page 256)
- 240# weight capacity per shelf.
- Track system has a brushed aluminum finish. Floor mounting hardware included.
- Track adds 2 3/4" to overall height of shelving.
- Optional Security Back Panels available (see page 258).
- All systems are letter depth, 12"D shelving only.

Model No.	Description	Dimensions	LFI	Wt.	List Price
Starter/Adder Systems (does not include shelving)					
Dividers not included in systems					
EFPL36721	2/1, 36"L, 7-High System	78"W x 27"D	728"	363#	$3144
EFPL36732	3/2, 36"L, 7-High System	116"W x 27"D	1212"	597#	$5374
EFPL36743	4/3, 36"L, 7-High System	156"W x 27"D	1697"	830#	$7485
EFPL367211	2/1/1, 36"L, 7-High System	78"W x 42"D	970"	518#	$5112
EFPL367322	3/2/2, 36"L, 7-High System	116"W x 42"D	1697"	893#	$9034
EFPL367433	4/3/3, 36"L, 7-High System	156"W x 42"D	2424"	1268#	$12718
EFPL36821	2/1, 36"L, 8-High System	78"W x 27"D	824"	402#	$3334
EFPL36832	3/2, 36"L, 8-High System	116"W x 27"D	1385"	660#	$5688
EFPL36843	4/3, 36"L, 8-High System	156"W x 27"D	1939"	918#	$7923
EFPL368211	2/1/1, 36"L, 8-High System	78"W x 42"D	1108"	571#	$5368
EFPL368322	3/2/2, 36"L, 8-High System	116"W x 42"D	1939"	984#	$9480
EFPL368433	4/3/3, 36"L, 8-High System	156"W x 42"D	2770"	1398#	$13354
EFPL42721	2/1, 42"L, 7-High System	90"W x 27"D	854"	726#	$3351
EFPL42732	3/2, 42"L, 7-High System	137"W x 27"D	1422"	756#	$5626
EFPL42743	4/3, 42"L, 7-High System	180"W x 27"D	1991"	1047#	$7957
EFPL427211	2/1/1, 42"L, 7-High System	90"W x 42"D	1138"	646#	$5438
EFPL427322	3/2/2, 42"L, 7-High System	137"W x 42"D	1991"	1071#	$9406
EFPL427433	4/3/3, 42"L, 7-High System	180"W x 42"D	2844"	1585#	$13486
EFPL42821	2/1, 42"L, 8-High System	90"W x 27"D	975"	507#	$3559
EFPL42832	3/2, 42"L, 8-High System	137"W x 27"D	1625"	840#	$5970
EFPL42843	4/3, 42"L, 8-High System	180"W x 27"D	2275"	1164#	$8437
EFPL428211	2/1/1, 42"L, 8-High System	90"W x 42"D	1300"	715#	$5718
EFPL428322	3/2/2, 42"L, 8-High System	137"W x 42"D	2275"	1243#	$9894
EFPL428433	4/3/3, 42"L, 8-High System	180"W x 42"D	3250"	1756#	$14182

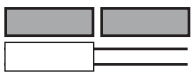

2/1
2 Rows; 2 Fixed, 1 Movable

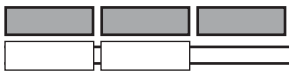

3/2
2 Rows; 3 Fixed, 2 Movable

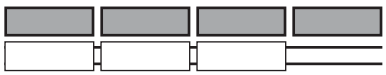

4/3
2 Rows; 4 Fixed, 3 Movable

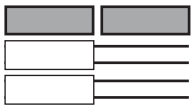

2/1/1
3 Rows; 2 Fixed, 2 Movable

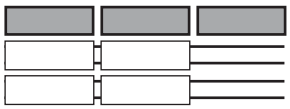

3/2/2
3 Rows; 3 Fixed, 4 Movable

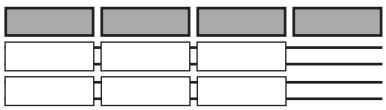

4/3/3
3 Rows; 4 Fixed, 6 Movable

4-POST SHELVING ON KWIK-TRACK – LEGAL DEPTH

GSA

Intertek

To increase filing density, 4-Post Shelving can also mount to the Kwik-Track system creating either a bi-file or tri-file lateral sliding shelving system. In either configuration, the rear row of shelves are stationary with shelves in front mounted into a sliding carriage on a track mounted to the floor.

- Heavy-duty aluminum track construction supports 3,500# per carriage.
- Anti-tip built into base for stability and easy installation.
- Systems are complete with shelving and track systems. **Dividers are not included.** (see page 256)
- Track system has a brushed aluminum finish. Floor mounting hardware included.
- Optional Security Back Panels available (see page 258).
- Track adds 2 3/4" to overall height of shelving.
- All systems are legal depth, 15"D shelving only.

Model No.	Description	Dimensions	LFI	Wt.	List Price
Dividers not included in systems					
EFPG36721	2/1, 36"L, 7-High System	78"W x 33"D	728"	405#	$3246
EFPG36732	3/2, 36"L, 7-High System	116"W x 33"D	1212"	665#	$5549
EFPG36743	4/3, 36"L, 7-High System	156"W x 33"D	1697"	924#	$7733
EFPG367211	2/1/1, 36"L, 7-High System	78"W x 51"D	970"	578#	$5257
EFPG367322	3/2/2, 36"L, 7-High System	116"W x 51"D	1697"	997#	$9295
EFPG367433	4/3/3, 36"L, 7-High System	156"W x 51"D	2424"	1416#	$13095
EFPG36821	2/1, 36"L, 8-High System	78"W x 33"D	824"	452#	$3461
EFPG36832	3/2, 36"L, 8-High System	116"W x 33"D	1385"	714#	$5902
EFPG36843	4/3, 36"L, 8-High System	156"W x 33"D	1939"	1030#	$8224
EFPG368211	2/1/1, 36"L, 8-High System	78"W x 51"D	1108"	642#	$5549
EFPG368322	3/2/2, 36"L, 8-High System	116"W x 51"D	1939"	1079#	$9802
EFPG368433	4/3/3, 36"L, 8-High System	156"W x 51"D	2770"	1573#	$13817
EFPG42721	2/1, 42"L, 7-High System	90"W x 33"D	854"	504#	$3564
EFPG42732	3/2, 42"L, 7-High System	137"W x 33"D	1422"	833#	$6113
EFPG42743	4/3, 42"L, 7-High System	180"W x 33"D	1991"	1156#	$8472
EFPG427211	2/1/1, 42"L, 7-High System	90"W x 51"D	1138"	714#	$5729
EFPG427322	3/2/2, 42"L, 7-High System	137"W x 51"D	1991"	1239#	$10177
EFPG427433	4/3/3, 42"L, 7-High System	180"W x 51"D	2844"	1753#	$14225
EFPG42821	2/1, 42"L, 8-High System	90"W x 33"D	975"	564#	$3812
EFPG42832	3/2, 42"L, 8-High System	137"W x 33"D	1625"	931#	$6521
EFPG42843	4/3, 42"L, 8-High System	180"W x 33"D	2275"	1293#	$9040
EFPG428211	2/1/1, 42"L, 8-High System	90"W x 51"D	1300"	795#	$6065
EFPG428322	3/2/2, 42"L, 8-High System	137"W x 51"D	2275"	1380#	$10761
EFPG428433	4/3/3, 42"L, 8-High System	180"W x 51"D	3250"	1955#	$15077

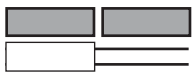

2/1
2 Rows; 2 Fixed, 1 Movable

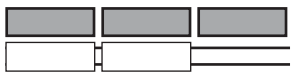

3/2
2 Rows; 3 Fixed, 2 Movable

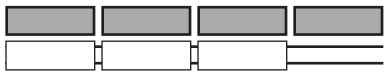

4/3
2 Rows; 4 Fixed, 3 Movable

2/1/1
3 Rows; 2 Fixed, 2 Movable

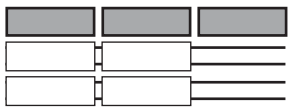

3/2/2
3 Rows; 3 Fixed, 4 Movable

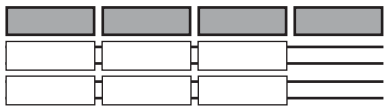

4/3/3
3 Rows; 4 Fixed, 6 Movable

THE SECURITY SHADE

The "Security Shade" a vertical locking tambour door, that provides an affordable alternative to purchasing new filing equipment. The Security Shade not only provides privacy, but also complies with HIPAA Guidelines.

- Can be easily installed on existing 4-Post shelving including most competitive shelving lines.
- Housing adds 8 1/4" in height and 11 1/2" in depth.
- Approximately 10 minutes to install.
- Do not need to remove existing files.
- Extends 4-Post shelving out by 2".
- Key lock keyed differently.
- Doors are available in Graphite only.
- Housing available in all standard paints.

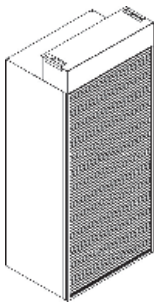

Model No.	W	D	H	Wt.	List Price	Mobile System List Price
SS3665	36"	2"	65"	50#	$1210	$1347
SS3676	36"	2"	76"	60#	$1210	$1347
SS3688	36"	2"	88"	70#	$1296	$1432
SS4265	42"	2"	65"	55#	$1382	$1519
SS4276	42"	2"	76"	65#	$1382	$1519
SS4288	42"	2"	88"	75#	$1435	$1572
SS4865	48"	2"	65"	60#	$1489	$1626
SS4876	48"	2"	76"	70#	$1489	$1626
SS4888	48"	2"	88"	80#	$1539	$1675

Note: Security Shade cannot be used in conjunction with a Reference Shelf.

How to order Security Shade for a mobile system:

First, determine the appropriate type of mobile system you are using, then select the code next to your system in parentheses:

* Mobile 1000 (1000) *Mobile Lite (ML) *4-Post on Kwik-Track (KT)

Next, add the code at the end of the appropriate Security Shade model number.

Example: If you have a 36" wide, 7-tier, 4-Post shelving on Kwik-Track, the appropriate model number would be SS3676KT.

HEAVY-DUTY SHELVING

A complete starter section unit includes two uprights, five shelves (24", 30", 36", 42", or 48" wide), five common stops, twelve shelf supports, shelf reinforcements as required, and one canopy top. Shelves are 18-ga. steel. An adder unit includes the previously mentioned paired with one closed upright. (Note Shelf reinforcements are standard in Pebble Gray.)

Choose from either closed "L" uprights or closed "T" uprights. "T" uprights are normally for internal range support, while closed "L" uprights provide a more finished external appearance.

- 1,000# weight capacity per shelf.
- 12 3/4" clearance between shelves.

Dividers are not included, but are required when using standard common stops.

Compatible with Mobile Aisle 1000 and Mobile Lite, but not Kwik-Track.

PRODUCT NUMBERING SYSTEM FOR FOUR POST SHELVING

Product No. Example: **EXL3618865S**

EX Heavy-Duty Shelving
36 Shelving Width in Inches (24, 30, 36, 42, and 48)
86 Upright Height in Inches (only one height)
L or T Shelving Type ("L" for Closed L-Uprights, "T" for Closed T-Uprights)
18 Shelving Depth in Inches (18 and 36)
S Starter

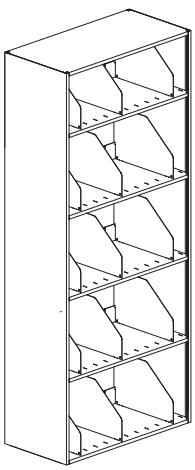

Model No.	W	D	H	Wt.	List Price
Starter units with two Closed "L" Uprights					
EXL2418865S	24"	18"	86"	136#	$1001
EXL2436865S	24"	36"	86"	276#	$1621
EXL3018865S	30"	18"	86"	169#	$974
EXL3036865S	30"	36"	86"	303#	$1634
EXL3618865S	36"	18"	86"	172#	$1019
EXL3636865S	36"	36"	86"	331#	$1651
EXL4218865S	42"	18"	86"	190#	$1014
EXL4236865S	42"	36"	86"	357#	$1656
EXL4818865S	48"	18"	86"	211#	$1041
EXL4836865S	48"	36"	86"	388#	$1691

HEAVY-DUTY SHELVING (CONTINUED)

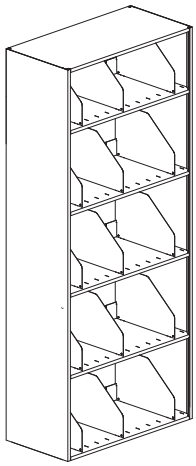

Model No.	W	D	H	Wt.	List Price
Adder units with Closed "T" Uprights					
EXT2418865A	24"	18"	86"	125#	$938
EXT2436865A	24"	36"	86"	216#	$1422
EXT3018865A	30"	18"	86"	143#	$911
EXT3036865A	30"	36"	86"	243#	$1435
EXT3618865A	36"	18"	86"	161#	$956
EXT3636865A	36"	36"	86"	271#	$1452
EXT4218865A	42"	18"	86"	179#	$951
EXT4236865A	42"	36"	86"	297#	$1457
EXT4818865A	48"	18"	86"	201#	$978
EXT4836865A	48"	36"	86"	328#	$1492
Closed "L" Uprights – 86" Height					
X1886L		18"		31#	$146
X3686L		36"		61#	$259
Closed "T" Uprights – 86" Height					
X1886T		18"		31#	$199
X3686T		36"		61#	$319

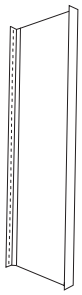

Slotted Shelves					
18" Depth					
EX2418S	24"	18"		7#	$55
EX3018S	30"	18"		8 3/4#	$49
EX3618S	36"	18"		10 1/4#	$57
EX4218S	42"	18"		12#	$55
EX4818S	48"	18"		13 3/4#	$61

Note: Order three supports per shelf. Shelves are 18-gauge.

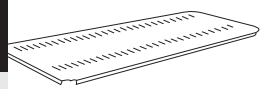

36" Depth					
EX2436S	24"	36"		13 1/4#	$103
EX3036S	30"	36"		16 1/2#	$103
EX3636S	36"	36"		19 3/4#	$106
EX4236S	42"	36"		22 3/4#	$106
EX4836S	48"	36"		26#	$113

Note: Order three supports per shelf. Shelves are 18-gauge.

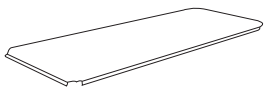

Unslotted Shelves, or Canopy Top					
18" Depth					
EF2418U18GA	24"	18"		7#	$53
EF3018U18GA	30"	18"		8 3/4#	$56
EF3618U18GA	36"	18"		10 1/4#	$61
EF4218U18GA	42"	18"		12#	$61
EF4818U18GA	48"	18"		13 3/4#	$58
36" Depth					
EF2436U18GA	24"	36"		13 1/4#	$106
EF3036U18GA	30"	36"		16 1/2#	$119
EF3636U18GA	36"	36"		19 1/2#	$121
EF4236U18GA	42"	36"		22 3/4#	$121
EF4836U18GA	48"	36"		26#	$121

Note: Shelves are 18-gauge. Shelf Reinforcements are not required for the Canopy tops.

HEAVY-DUTY SHELVING (CONTINUED)

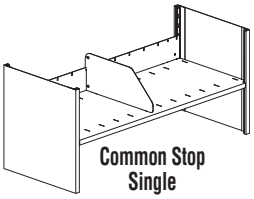

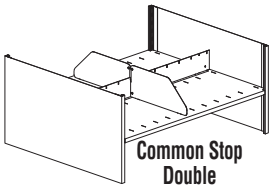

Model No.	W	H	Wt.	List Price
Common Stops (CS)				
EF24CS	24"	3 1/2"	1 1/4#	$9
EF30CS	30"	3 1/2"	1 1/2#	$9
EF36CS	36"	3 1/2"	1 1/2#	$9
EF42CS	42"	3 1/2"	1 3/4#	$10
EF48CS	48"	3 1/2"	2#	$10

Note: Dividers are required when using common stops.

Shelf Supports (SS)				
EX24SS	24"	1 1/4"	2 1/2#	$20
EX30SS	30"	1 1/4"	3#	$20
EX36SS	36"	1 1/4"	3 1/2#	$20
EX42SS	42"	1 1/4"	4#	$20
EX48SS	48"	1 1/4"	4 1/2#	$20

Note: Shelf supports are not interchangeable with bottom shelf supports.

Shelf Support Bottom (SSB)				
EF2414SSB	24"	3/4"	1 3/4#	$12
EF2411SSB	24"	3/4"	3 2/3#	$18
EF3014SSB	30"	3/4"	1 2/5#	$12
EF3011SSB	30"	3/4"	2 1/4#	$18
EF3614SSB	36"	3/4"	1 3/4#	$12
EF3611SSB	36"	3/4"	2 5/7#	$18
EF4214SSB	42"	3/4"	1 3/4#	$12
EF4211SSB	42"	3/4"	3 1/4#	$18
EF4814SSB	48"	3/4"	2 1/4#	$12
EF4811SSB	48"	3/4"	3 2/3#	$18

Note: Bottom shelf must be supported by bottom shelf. Graphite only.

Shelf Reinforcements (SR)				
X18SR	18"	1 1/8"	1#	$16
X36SR	36"	1 1/8"	1 1/2#	$16

Note: Pebble Gray.

Shelf Reinforcements (SRB)				
X18SRB	18"	3/4"	3/4#	$7
X36SRB	36"	3/4"	1 1/2#	$7

Note: Pebble Gray.

Adjustable File Dividers (DV) Standard Pack of 5:				
X18DV5	18"	12"	13# per pack	$92

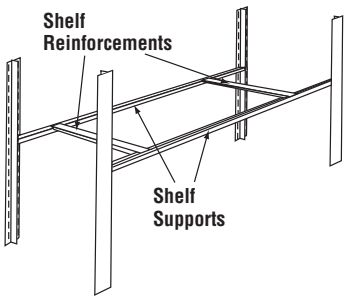

	24"	30"	36"	42"	48"
18"	2	2	2	2	2
36"	3	3	3	3	3

Number of Shelf Reinforcements required per loaded shelf.

FILE HARBOR CABINETS

- Horizontally sliding tambour doors
- Doors recede into concealed inner pockets
- 100% access to files
- Adjustable shelves and dividers – shelves adjust on 1"H increments
- Shelf depth 14 3/4"; interior depth 16 1/2"; 10" clearance between shelves.
- All internal components standard in Graphite finish.
- For cabinets to be keyed alike, add a "K" to the end of the model number and refer to last column for list price.

Standard door colors: Mist, Graphite, Pebble Gray, and Sand **only**

Interior Heights:
83"H = 76"H interior
62"H = 55"H interior
38"H = 34"H interior

CABINETS - 83" HEIGHT (76" INTERIOR HEIGHT)

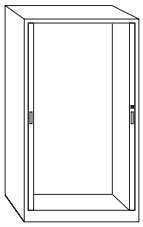

Model No.	Description	Size W	Size H	Size D	Wt.	List Price	List Price Add "K" Suffix Keyed-Alike
Empty Cabinet – built-in bottom shelf; add other components.							
83483	48"W x 83"H	47 1/4"	83"	17 3/4"	245#	$2675	$2739
83423	42"W x 83"H	42"	83"	17 3/4"	220#	$2495	$2560
83363	36"W x 83"H	36"	83"	17 3/4"	200#	$2250	$2315

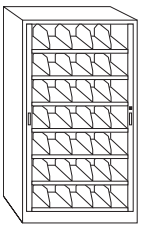

Model No.	Description	Size W	Size H	Size D	Wt.	List Price	List Price Add "K" Suffix Keyed-Alike
Preconfigured Cabinet for color-coded end-tab filing. Includes 7 shelves with adjustable filing dividers.							
8348A3	48"W x 83"H 4 dividers per shelf.	47 1/4"	83"	17 3/4"	355#	$3682	$3747
8342A3	42"W x 83"H 3 dividers per shelf.	42"	83"	17 3/4"	325#	$3474	$3539
8336A3	36"W x 83"H 3 dividers per shelf.	36"	83"	17 3/4"	290#	$3240	$3305

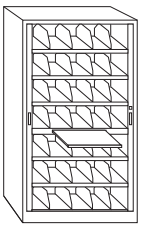

Model No.	Description	Size W	Size H	Size D	Wt.	List Price	List Price Add "K" Suffix Keyed-Alike
Same as above except one standard shelf replaced with pull-out reference shelf.							
8348B3	48"W x 83"H 4 dividers per shelf.	47 1/4"	83"	17 3/4"	364#	$3881	$3946
8342B3	42"W x 83"H 3 dividers per shelf.	42"	83"	17 3/4"	333#	$3600	$3666
8336B3	36"W x 83"H 3 dividers per shelf.	36"	83"	17 3/4"	298#	$3424	$3488

FILE HARBOR CABINETS - 62" HEIGHT (55" INTERIOR HEIGHT)

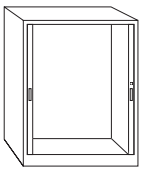

Model No.	Description	Size W	Size H	Size D	Wt.	List Price	List Price Add "K" Suffix Keyed-Alike
Empty 62"H Cabinet – built-in bottom shelf; add other components.							
62483	48"W x 62"H	47 1/4"	61 1/2"	17 3/4"	200#	$2192	$2257
62423	42"W x 62"H	42"	61 1/2"	17 3/4"	188#	$2061	$2127
62363	36"W x 62"H	36"	61 1/2"	17 3/4"	175#	$1977	$2043

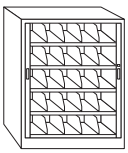

Model No.	Description	Size W	Size H	Size D	Wt.	List Price	List Price Add "K" Suffix Keyed-Alike
Preconfigured Cabinet for color-coded end-tab filing. Includes 5 shelves with adjustable filing dividers.							
6248A3	48"W x 62"H 4 dividers per shelf.	47 1/4"	61 1/2"	17 3/4"	284#	$2944	$3010
6242A3	42"W x 62"H 3 dividers per shelf.	42"	61 1/2"	17 3/4"	262#	$2768	$2833
6236A3	36"W x 62"H 3 dividers per shelf.	36"	61 1/2"	17 3/4"	237#	$2644	$2709

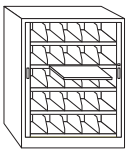

Model No.	Description	Size W	Size H	Size D	Wt.	List Price	List Price Add "K" Suffix Keyed-Alike
Same as above except one standard shelf replaced with pull-out reference shelf.							
6248B3	48"W x 62"H 4 dividers per shelf.	47 1/4"	61 1/2"	17 3/4"	298#	$3234	$3302
6242B3	42"W x 62"H 3 dividers per shelf.	42"	61 1/2"	17 3/4"	274#	$2960	$3024
6236B3	36"W x 62"H 3 dividers per shelf.	36"	61 1/2"	17 3/4"	247#	$2829	$2894

FILE HARBOR CABINETS - 38" HEIGHT (34" INTERIOR HEIGHT)

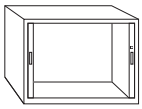

Model No.	Description	Size W	Size H	Size D	Wt.	List Price	List Price Add "K" Suffix Keyed-Alike
	Empty 38"H Cabinet – built-in bottom shelf; add other components.						
38483	48"W x 38"H	47 1/4"	38"	17 3/4"	100#	$1960	$2026
38423	42"W x 38"H	42"	38"	17 3/4"	90#	$1898	$1962
38363	36"W x 38"H	36"	38"	17 3/4"	80#	$1835	$1900

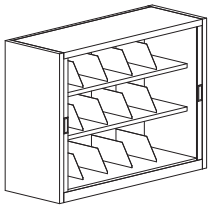

	Preconfigured Cabinet for color coded – end tab filing. Includes 3 shelves with adjustable filing components.							
3848A3	48"W x 38"H	4 dividers per shelf	47 1/4"	38"	17 3/4"	142#	$2377	$2443
3842A3	42"W x 38"H	3 dividers per shelf	42"	38"	17 3/4"	130#	$2288	$2352
3836A3	36"W x 38"H	3 dividers per shelf	36"	38"	17 3/4"	105#	$2204	$2269

FILE HARBOR COMPONENTS

- Shelves have a 200# weight capacity.
- Reference shelves have a 100# weight capacity.
- Dividers adjust on 2.5" increments.

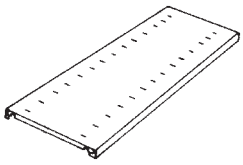

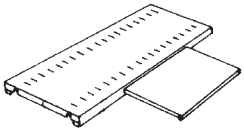

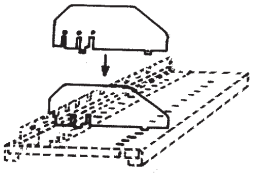

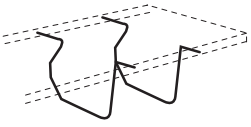

MWD

Model No.	Description	Size W	Size H	Size D	Wt.	List Price
MS4801	**42" Shelf** (Fits 48"W cabinet.)	42"	1"	14 3/4"	15#	$126
MS4802	Package of 2 shelves				30#	$223
MS4803	Package of 3 shelves				45#	$337
MS4201	**37" Shelf** (Fits 42"W cabinet.)	36 3/4"	1"	14 3/4"	13#	$109
MS4202	Package of 2 shelves				26#	$213
MS4203	Package of 3 shelves				39#	$312
MS3601	**31" Shelf** (Fits 36"W cabinet.)	30 3/4"	1"	14 3/4"	11#	$101
MS3602	Package of 2 shelves				22#	$189
MS3603	Package of 3 shelves				33#	$276
MRS48	**42" Reference Shelf** (Fits 48"W cabinet.) Same as MS48 but with 18"W x 11"D pull-out slide.	42"	1"	14 3/4"	30#	$458
MRS42	**37" Reference Shelf** (Fits 42"W cabinet.)	36 3/4"	1"	14 3/4"	27#	$442
MRS36	**31" Reference Shelf** (Fits 36"W cabinet.)	30 3/4"	1"	14 3/4"	23#	$428
MFD48	**Adjustable Filing Dividers** (Fits 42"W shelf.) 4 adjustable filing dividers and 1 backstop for separating file folders.	—	6"	13"	4.8#	$73
MFD42	**Adjustable Filing Dividers** (Fits 37"W shelf.) 3 adjustable filing dividers and 1 backstop for separating file folders.	—	6"	13"	4.3#	$71
MFD36	**Adjustable Filing Dividers** (Fits 31"W shelf.) Same as above.	—	6"	13"	3.8#	$66
MFD4	**Set of 4 Extra Filing Dividers** No backstop.	—	6"	13"	4.0#	$63
MWD	**Wire Dividers** For separating binders or books on any shelf; package of 4 (suspend from shelf above).	1/4"	9"	14 3/4"	2#	$182

FILE HARBOR COMPONENTS (CONTINUED)

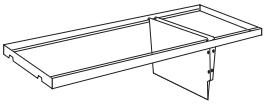

Model No.	Description	W	Size H	D	Wt.	List Price
MR4801	**42" Rail** (Fits 48"W cabinet.) Accommodates MSP suspended pockets only.	42"	1"	14 3/4"	5#	$158
MR4802	Package of 2 rails				10#	$312
MR4803	Package of 3 rails				15#	$473
MR4201	**37" Rail** (Fits 42"W cabinet.)	36 3/4"	1"	14 3/4"	4#	$150
MR4202	Package of 2 rails				8#	$306
MR4203	Package of 3 rails				12#	$459
MR3601	**31" Rail** (Fits 36"W cabinet.)	30 3/4"	1"	14 3/4"	4#	$146
MR3602	Package of 2 rails				8#	$292
MR3603	Package of 3 rails				12#	$438

Note: Rails in graphite only.

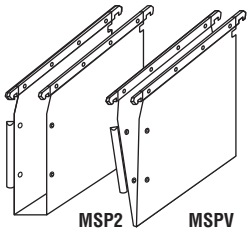

MSP2	**Suspended Pockets** End-tab 2"W box-bottom pocket hangs under Rail or Shelf. Set of 25, includes labels. Holds standard letter or legal-size file folders. Heavy-duty orange kraft.	2"	11"	13"	8#	$234
MSP1	Same as above except 1"W box bottom.	1"	11"	13"	8#	$214
MSPV	Same as above except V-bottom.	3/8"	11"	13"	7#	$179
911085	Package of extra labels (qty. 216)				1#	$52

Note: Interlock mechanism included with each roll-out.

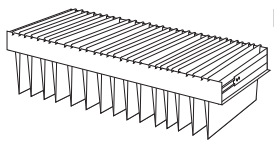

Model No.	Description	W	Size H	D	Wt.	List Price
MRF482	**Roll-Out Frame** (Fits 48"W cabinet.) 39 1/4 filing inches. For legal-size hanging folders, print-outs, etc., in side-to-side format. To accommodate letter-size hanging folders, add MCM481.	40 3/4"	3 3/4"	15 3/4"	18#	$433
MRF422	**Roll-Out Frame** (Fits 42"W cabinet.) 34 filing inches. To accommodate letter-size folders, add MCM421.	35 3/4"	3 3/4"	15 3/4"	17#	$430
MRF362	**Roll-Out Frame** (Fits 36"W cabinet.) 28 filing inches. To accommodate letter-size folders, add MCM361.	29 3/4"	3 3/4"	15 3/4"	15#	$423

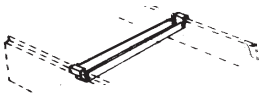

MCM	**Cross-Member** (front-to-back) Creates separations within Roll-Out Frame for filing front to back.	1 1/2"	3/4"	15 3/4"	1#	$56

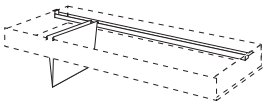

MCM481	**Cross-Member** (side-to-side) (Fits MRF482.) For filing letter-size hanging folders side-to-side.	40 3/4"	3/4"	1 1/2"	2#	$162
MCM421	**Cross-Member** (side-to-side) (Fits MRF422.)	35 3/4"	3/4"	1 1/2"	2#	$146
MCM361	**Cross-Member** (side-to-side) (Fits MRF362.)	29 3/4"	3/4"	1 1/2"	2#	$128

FILE HARBOR COMPONENTS (CONTINUED)

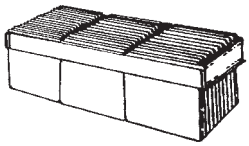

Model No.	Description	Size W	Size H	Size D	Wt.	List Price
MRP482	**Roll-Out Frame for Pendaflex** (Fits 48"W cabinet.) Includes 2 Cross-Members; provides 3 rows of letter-size Pendaflex (45 filing inches).	40 3/4"	3 3/4"	15 3/4"	20#	$569
MRP422	**Roll-Out Frame for Pendaflex** (Fits 42"W cabinet.) Includes 2 Cross-Members; provides 2 rows of letter-size Pendaflex (30 filing inches).	35 3/4"	3 3/4"	15 3/4"	19#	$551
MRP362	**Roll-Out Frame for Pendaflex** (Fits 36"W cabinet.) Includes 2 Cross-Members; provides 2 rows of letter-size Pendaflex (30 filing inches).	29 3/4"	3 3/4"	15 3/4"	17#	$499

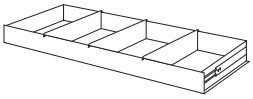

(125# capacity)

Model No.	Description	Size W	Size H	Size D	Wt.	List Price
MRD482	**Roll-Out Drawer with Dividers** (Fits 48"W cabinet.) For storage of diskettes, other media. 3 dividers provided (adjust on 1/4" increments).	40 3/4"	3 3/4"	15 3/4"	27#	$682
	Interior:	39"	–	15 1/8"		
MRD422	**Roll-Out Drawer with Dividers** (Fits 42"W cabinet.)	35 3/4"	3 3/4"	15 3/4"	25#	$649
	Interior:	33 3/4"	–	15 1/8"		
MRD362	**Roll-Out Drawer with Dividers** (Fits 36"W cabinet.)	29 3/4"	3 3/4"	15 3/4"	23#	$610
	Interior:	27 3/4"	–	15 1/8"		
MDV	**Set of 3 Extra Dividers For Roll**-Out Drawers (Above.)		—		3.3#	$85

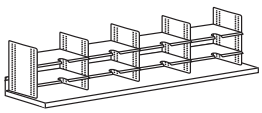

Model No.	Description	Size W	Size H	Size D	Wt.	List Price
MO48C	**Kwik-File Organizing System** (Fits 48"W cabinet.) Preconfigured unit with 12 pockets (9 10"W x 4"H, 3 11"W x 4"H); for storage of forms, labels, sales literature.	42"	13 1/4"	14 3/4"	41#	$574
	Color: Graphite only					
MO42C	**Kwik-File Organizing System** (Fits 42"W cabinet.) Same as above except 12 pockets (9"W x 4"H).	36 3/4"	13 3/4"	14 3/4"	38#	$550
MO36C	**Kwik-File Organizing System** (Fits 36"W cabinet.) Same as above except 9 pockets (10"W x 4"H).	30 3/4"	13 3/4"	14 3/4"	29#	$473

FILE HARBOR ANCHORING KIT

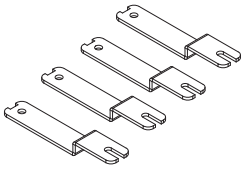

Model No.	Description	Size W	Size H	Size D	Wt.	List Price
FHAK	**Floor Anchoring Kit** Four mounting brackets. Pebble Gray only.				3#	$29

FILE HARBOR COMPONENTS (CONTINUED)

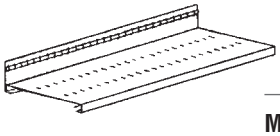

Model No.	Description	Size W	Size H	Size D	Wt.	List Price
MOS48	**42" Master Shelf** (Fits 48"W cabinet.) To build 41"W file organizing system; accepts shelf supports, dividers, in 1" increments.	42"	5 1/4"	14 3/4"	12#	$241
MOS42	**37" Master Shelf** (Fits 42" cabinet.) Same as above except builds 36"W organizing system.	36 3/4"	5 1/4"	14 3/4"	11#	$234
MOS36	**31" Master Shelf** (Fits 36" cabinet.) Same as above except builds 30"W organizing system.	30 3/4"	5 1/4"	14 3/4"	9#	$217

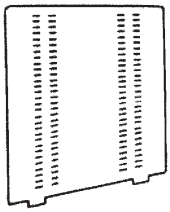

SS12LC	**Shelf Support** Supports shelves (below) on 1/2" vertical increments; mounts on Master Shelf. (Not compatible with MS48/MS36 shelves).	—	12"	12"	1.5#	$28

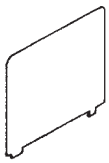

D09GS03 (package of 3)	**Dividers** To separate binders, manuals, etc.	—	9"	13 1/2"	6.9#	$61
D09GS10 (package of 10)		—	9"	13 1/2"	23.0#	$200

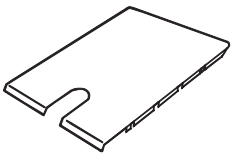

Kwick-Shelf® Shelving System
Shelves fit between Shelf Supports to create sorting or storage pockets for paper, forms, or other media. Each shelf locks firmly in place, yet removes quickly for easy reconfiguration. Shelves are 18-gauge.

Width	Depth	Wt. per shelf	6-Shelf Package Model No.	6-Shelf Package List Price
4"	12"	.5#	**0412P06**	$82
5"	12"	.75#	**0512P06**	$89
6"	12"	.75#	**0612P06**	$92
7"	12"	1.0#	**0712P06**	$94
8"	12"	1.05#	**0812P06**	$111
9"	12"	1.05#	**0912P06**	$121
10"	12"	1.15#	**1012P06**	$129
11"	12"	1.25#	**1112P06**	$136
12"	12"	1.4#	**1212P06**	$138
14"	12"	2.3#	**1412P06**	$187
16"	12"	2.8#	**1612P06**	$217

FILE HARBOR CABINETS ON KWIK-TRACK TYPICALS

To increase filing density, File Harbor Cabinets can also mount to the Kwik-Track system creating either a bi-file or tri-file lateral sliding cabinet system. In either configuration, the rear of the cabinets are stationary with cabinets in front mounted into a sliding carriage on a track mounted to the floor.

- Heavy-duty aluminum track construction supports 3,500# per carriage.
- Anti-tip arm built into base for stability and easy installation.
- Systems are complete with pre-configured cabinets (see page 246) and track systems.
- Track system has a brushed aluminum finish. Floor mounting hardware included.
- Track adds 2 3/4" to overall height of system.

Model No.	Description	Dimensions	Wt.	LFI	List Price
NOTE: 36" W Options use 8336A3 cabinets.					
FH3621	2/1 System	78"W x 38 1/2"D x 85"H	905#	651"	$10906
FH3632	3/2 System	116"W x 38 1/2"D x 85"H	1520#	1085"	$18350
FH3643	4/3 System	156"W x 38 1/2"D x 85"H	2135#	1519"	$25672
FH36211	2/1/1 System	78"W x 59 1/4"D x 85"H	975#	868"	$15437
FH36322	3/2/2 System	116"W x 59 1/4"D x 85"H	2170#	1519"	$27137
FH36433	4/3/3 System	156"W x 59 1/4"D x 85"H	3110#	2170"	$38594
NOTE: 42" W Options use 83423 cabinets.					
FH4221	2/1 System	90"W x 38 1/2"D x 85"H	1010#	777"	$11932
FH4232	3/2 System	137"W x 38 1/2"D x 85"H	1695#	1295"	$19969
FH4243	4/3 System	180"W x 38 1/2"D x 85"H	2380#	1813"	$28062
FH42211	2/1/1 System	90"W x 59 1/4"D x 85"H	1370#	1036"	$16891
FH42322	3/2/2 System	137"W x 59 1/4"D x 85"H	2415#	1813"	$29479
FH42433	4/3/3 System	180"W x 59 1/4"D x 85"H	3460#	2590"	$42178
NOTE: 48" W Options use 8342A3 cabinets.					
FH4821	2/1 System	99"W x 38 1/2"D x 85"H	1100#	882"	$12534
FH4832	3/2 System	150"W x 38 1/2"D x 85"H	1900#	1470"	$21137
FH4843	4/3 System	198"W x 38 1/2"D x 85"H	2650#	2058"	$29659
FH48211	2/1/1 System	99"W x 59 1/4"D x 85"H	1500#	1176"	$17768
FH48322	3/2/2 System	150"W x 59 1/4"D x 85"H	2700#	2058"	$31069
FH48433	4/3/3 System	198"W x 59 1/4"D x 85"H	3700#	2940"	$44379

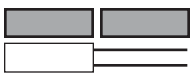

2/1
2 Rows; 2 Fixed, 1 Movable

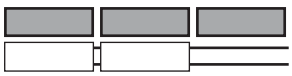

3/2
2 Rows; 3 Fixed, 2 Movable

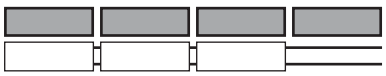

4/3
2 Rows; 4 Fixed, 3 Movable

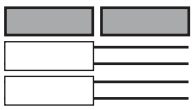

2/1/1
3 Rows; 2 Fixed, 2 Movable

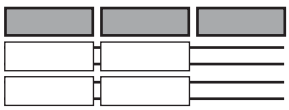

3/2/2
3 Rows; 3 Fixed, 4 Movable

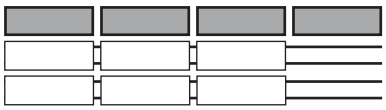

4/3/3
3 Rows; 4 Fixed, 6 Movable

FORMS/STORAGE CABINETS

GIZA/CAP Intertek GSA

F/S Cabinets provide efficient and convenient storage for the large quantities of forms or paper required in offices and mailrooms.

- Five preconfigured models available.
- All preconfigured models standard with 4"H (except where noted) x 12"D pockets adjustable on 1/2" H vertical increments.
- 50# capacity per shelf
- All-welded steel cabinet construction.
- Optional locking doors available (cannot be added in the field).
- Build-your-own models available on pages 274-275.

Configuration A

Stores binders, files and other items vertically on top; shelves in middle hold letter-sized materials; bulk storage below.

3665NA shown

Model No.	Width	Height	Features	Doors	Wt./ Cartons	List Price
3665DA1	36"	64 1/2"	21 Pockets	Yes	284# / 7	$3536
3665NA1				No	239# / 7	$2695
3680DA1		80"	33 Pockets	Yes	357# / 8	$4055
3680NA1				No	300# / 8	$3142
4265DA1	42"	64 1/2"	28 Pockets	Yes	329# / 7	$4006
4265NA1				No	278# / 7	$3027
4280DA1		80"	44 Pockets	Yes	407# / 8	$4595
4280NA1				No	345# / 8	$3540

Configuration B

Pockets from top to bottom, maximizing storage density for letter-sized materials. Ideal for organizing or collating pages for brochures, bulletins, etc.

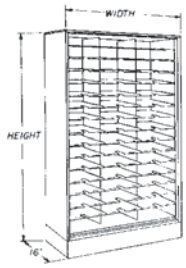

3665NB shown

Model No.	Width	Height	Features	Doors	Wt./ Cartons	List Price
3665DB1	36"	64 1/2"	42 Pockets	Yes	302# / 5	$3647
3665NB1				No	257# / 5	$2807
3680DB1		80"	54 Pockets	Yes	374# / 5	$4179
3680NB1				No	317# / 5	$3269
4265DB1	42"	64 1/2"	56 Pockets	Yes	353# / 5	$4183
4265NB1				No	302# / 5	$3254
4280DB1		80"	72 Pockets	Yes	429# / 6	$4841
4280NB1				No	367# / 6	$3824

Configuration C

Same as B" above, but with 6" high pockets (4" high in all other preconfigured models).

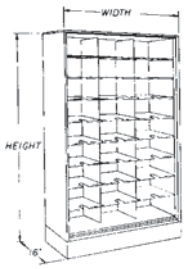

3665NC shown

Model No.	Width	Height	Features	Doors	Wt./ Cartons	List Price
3665DC1	36"	64 1/2"	27 Pockets	Yes	272# / 4	$3584
3665NC1				No	227# / 4	$2530
3680DC1		80"	36 Pockets	Yes	338# / 5	$3847
3680NC1				No	281# / 5	$2939
4265DC1	42"	64 1/2"	36 Pockets	Yes	318# / 4	$3839
4265NC1				No	267# / 4	$2905
4280DC1		80"	48 Pockets	Yes	387# / 5	$4421
4280NC1				No	325# / 5	$3403

Configuration D

Pockets above for storing letter-sized materials; bulk storage below.

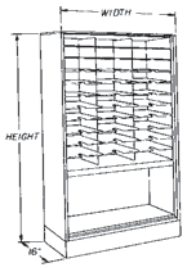

3665ND shown

Model No.	Width	Height	Features	Doors	Wt./ Cartons	List Price
3665DD1	36"	64 1/2"	33 Pockets	Yes	293# / 6	$3588
3665ND1				No	248# / 6	$2749
3680DD1		80"	42 Pockets	Yes	362# / 6	$4055
3680ND1				No	305# / 6	$3143
4265DD1	42"	64 1/2"	44 Pockets	Yes	340# / 5	$4066
4265ND1				No	289# / 5	$3137
4280DD1		80"	56 Pockets	Yes	414# / 6	$4632
4280ND1				No	352# / 6	$3617

Configuration E

For binders, files, other items stored vertically; or move dividers around and create bulk storage areas as well.

Note: 240# capacity per shelf.

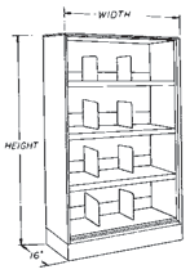

3665NE shown

Model No.	Width	Height	Features	Doors	Wt./ Cartons	List Price
3665DE1	36"	64 1/2"	3 Adjustable	Yes	262# / 7	$3338
3665NE1			Shelves	No	217# / 7	$2681
3680DE1		80"	4 Adjustable	Yes	327# / 6	$3789
3680NE1			Shelves	No	270# / 6	$2879
4265DE1	42"	64 1/2"	3 Adjustable	Yes	294# / 8	$3621
4265NE1			Shelves	No	243# / 8	$2701
4280DE1		80"	4 Adjustable	Yes	359# / 8	$4312
4280NE1			Shelves	No	297# / 8	$3090

FORMS/STORAGE CABINETS

COLLATING/SORTING WORKSTATION

These cabinets are ideal for departmental sorting or collating operations in any department.

- 42"W models standard with 10"W pockets for storing forms, paper stock, brochures, etc.
- 36"W models standard with 11" and 12"W pockets for mail sorting.
- 1" thick low-pressure laminate work surface is 27"D and adjusts within cabinet on 1/2"H increments, 100 lb. capacity.
- All-welded steel cabinet construction.
- Steel back panel of cabinet has one 3" diameter cable management cutout.
- For Mailroom-specific applications, see Mailroom Furniture.

Model No.	Width	Height	Features	Wt./ Cartons	List Price	Std. Laminate List Price
						Lam Suffix
3680WS1	36"	80"	21 Pockets	202# / 8	$3060	$3227
4280WS1	42"	80"	28 Pockets	247# / 8	$3368	$3572

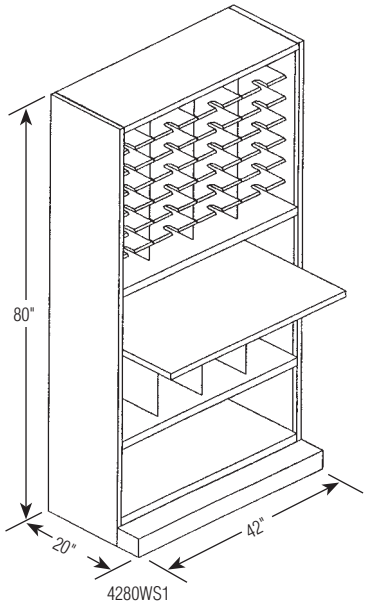

FORMS/STORAGE CABINETS

Create Your Own Cabinet Configuration

1. Decide which of the four F/S Cabinet models is appropriate for your organizing/collating/storing/or storage needs. Models are available 36" wide or 42" wide, and 64 1/2" high or 80" high.
2. Note the interior height and width of the model you specify (see specifications for Empty Cabinets below).
3. Configure the empty cabinet with components as shown below such that the total height and width of the components fits the interior height and width of the cabinet. All components adjust on 1/2" vertical increments.

Empty Cabinets

Depth, 16"; accommodate either 12" or 15" deep shelves. Sides have built-in shelf supports.

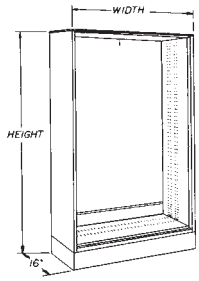

Model No.	Width Int.	Width Ext.	Height Int.	Height Ext.	Doors	Wt./ Cartons	List Price
3665DX1	34"	36"	57 1/2"	64 1/2"	Yes	194# / 1	$2701
3665NX1					No	149# / 1	$1927
3680DX1			73"	80"	Yes	230# / 1	$2930
3680NX1					No	180# / 1	$2003
4265DX1	40"	42"	57 1/2"	64 1/2"	Yes	217# / 1	$2939
4265NX1					No	166# / 1	$1981
4280DX1			73"	80"	Yes	258# / 1	$3194
4280NX1					No	196# / 1	$2154

Adjustable Master Shelves

Adjust vertically on 1/2" increments. For bulk storage; or accepts shelf supports or dividers on 1" horizontal increments.

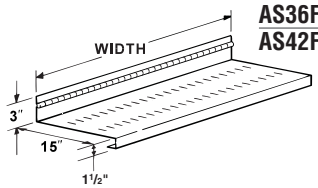

Model No.	Shelf Width	Wt./ Cartons	List Price
AS36F	34" (for 36"-wide cabinets)	16.8# / 1	$186
AS42F	40" (for 42"-wide cabinets)	19.5# / 1	$202

Dividers

Separate binders or other media. Place on adjustable master shelves or cabinet bottom on 1" horizontal increments.

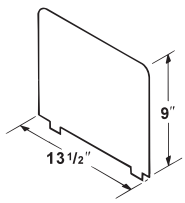

Model No.	Wt.	List Price
D09GS03 (3)	6.9# / 1	$61
D09GS10 (10)	23.0# / 1	$200

Shelf Supports

Not needed at sides of cabinet where shelf support is built in. Place on cabinet bottom or adjustable master shelves on 1" horizontal increments.

See page 281 for ordering more than 1 unit each.

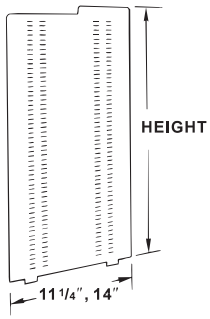

Model No.	Height	Depth	For Shelf Depth of	Wt.	List Price
SS24LM01	21"	11 1/4"	12"	4.7#	$47
SS24GM01		14"	15"	5.3#	$57
SS33LM01	30"	11 1/4"	12"	6.0#	$55
SS33GM01		14"	15"	7.0#	$68
SS41LM01	38"	11 1/4"	12"	7.3#	$68
SS41GM01		14"	15"	8.4#	$79
SS48LM01	45"	11 1/4"	12"	8.4#	$79
SS48GM01		14"	15"	9.7#	$92
SS65LS101	57"	11 1/4"	12"	10.6#	$102
SS65GS101		14"	15"	12.3#	$144
SS80LS101	72"	11 1/4"	12"	13.0#	$136
SS80GS101		14"	15"	15.0#	$173

Label Holders

Transparent Label Holders have a self-adhesive, magnetic, or velcro backing and fit securely on beveled shelf front. A blank insert with four sides is included. Package of 20.

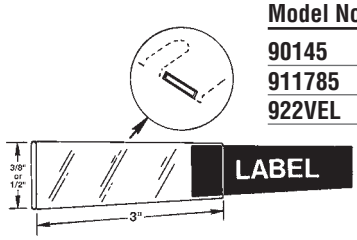

Model No.	Description	Width	Height	Wt.	List Price
90145	Self-adhesive	3"	3/8"	1 oz.	$28
911785	Magnetic	3"	1/2"	3 oz.	$45
922VEL	Velcro	3"	1/2"	3 oz.	$53

Shelves

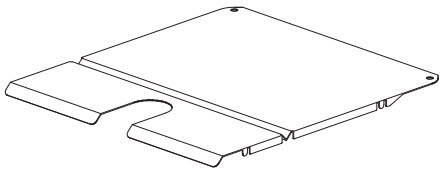

Kwik-Shelf® Shelving System
Shelves fit between Shelf Supports to create sorting or storage pockets for paper, forms, or other media. Each shelf locks firmly in place, yet removes quickly for easy reconfiguration. Shelves are 20-gauge.

6-Shelf Package

Model No.	Width	Depth	Wt. per shelf	List Price
0412P06	4"	12"	.5#	$82
0512P06	5"	12"	.75#	$89
0515P06	5"	15"	1.0#	$93
0612P06	6"	12"	.75#	$92
0712P06	7"	12"	1.0#	$94
0812P06	8"	12"	1.05#	$111
0912P06	9"	12"	1.05#	$121
0915P06	9"	15"	2.0#	$141
1012P06	10"	12"	1.15#	$129
1015P06	10"	15"	1.5#	$148
1112P06	11"	12"	1.25#	$136
1115P06	11"	15"	1.65#	$149
1212P06	12"	12"	1.4#	$138
1215P06	12"	15"	1.75#	$155
1412P06	14"	12"	2.3#	$187
1415P06	14"	15"	2.75#	$205
1515P06	15"	15"	2.9#	$227
1612P06	16"	12"	2.8#	$217
1615P06	16"	15"	3.0#	$245

Rails

Accommodate Suspended Pockets; ideal for storage of forms or paper where space is at a premium and frequent handling for storage and/or retrieval is not required. Height, 1" (allow 11" for Rail with Suspended Pockets). Graphite only.

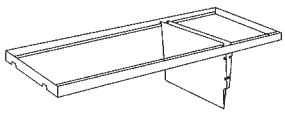

Model No.	Depth	Wt./ Cartons	Width	List Price
AR42	14 3/4"	5# /1	39 1/2" (for 42"-wide cabinets)	$205
AR36	14 3/4"	4# /1	33 1/2" (for 36"-wide cabinets)	$189

Suspended Pockets

V-bottom Suspended Pockets hang from Rails (above). Set of 25 includes labels (4 1/2" x 1/4"). Snap-together feature simplifies sorting. Heavy-duty orange kraft.

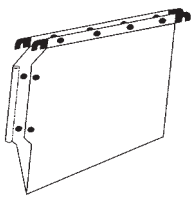

Model No.	Height	Width	Depth	Wt./ Cartons	List Price
MSPV	10 13/16"	3/8"	13"	7# /1	$179

Roll-Out Shelves

Make an ideal temporary, extended worksurface where space is tight. When fully extended on slides (10" maximum), detent locks shelf in place. 1" thick low-pressure laminate top with high-density particleboard core; radiused 3mm PVC edge. Height 3".

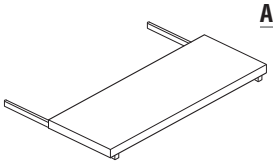

Model No.	Depth	Wt./ Cartons	Width	List Price
ARS42	15"	31# /1	39 3/4" (for 42"-wide cabinets)	$612
ARS36	15"	27# /1	33 3/4" (for 36"-wide cabinets)	$581

ARC™ ROTARY FILE

The ARC™ Rotary File is a double faced unit that rotates easily to provide access to both sides. Using our flexible cantilever style shelving, the ARC provides the most unobstructed filing inches per level and the easiest installation possible. The Complete Starter includes everything needed to house a filing system including the specified number of shelves and dividers.

- Allow 5.25" (letter depth) or 6.50" (legal depth) clearance from wall for rotating carriage.
- Empty units can be configured in endless variations for mixed media storage solutions.
- Shelves adjust on 1 1/2"H increments; 120 lb. weight capacity per shelf.
- Standard Lock on all cabinets.
- Complete Units are ideal for storing color-coded filing.
- Adder units attach to either right or left side of starter unit.
- To order a fully assembled unit, add the letter "**B**" after the letter "C" in the part number (e.g. ARC**B**244035).
- ARC top is unfinished. Work surfaces are available -- see page 258.
- Complete units have slotted shelves with two (2) file dividers per 24" wide shelf; three (3) file dividers per 30" wide shelf.
- **S: Starter, A: Adder

PRECONFIGURED TTPICALS

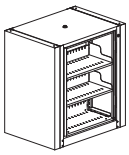

Model No.	W	D	H	Wt.	Knockdown List Price	Assembled List Price "B"
3-Tier Complete						
Letter (144 LFI)						
ARC24403S	37 1/4"	26 1/4"	41"	287#	$2162	$2507
ARC24403A	31 3/4"	26 1/4"	41"	255#	$1824	$2169
Legal (180 LFI)						
ARC30403S	46"	32 1/4"	41"	388#	$2634	$2981
ARC30403A	39 1/4"	32 1/4"	41"	348#	$2298	$2643

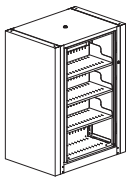

4-Tier Complete						
Letter (192 LFI)						
ARC24504S	37 1/4	26 1/4"	51"	323#	$2410	$2757
ARC24504A	31 3/4"	26 1/4"	51"	258#	$2149	$2496
Legal (240 LFI)						
ARC30504S	46"	32 1/4"	51"	437#	$2854	$3201
ARC30504A	39 1/4"	32 1/4"	51"	389#	$2474	$2823

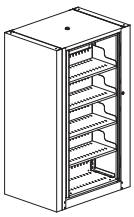

5-Tier Complete						
Letter (240 LFI)						
ARC24615S	37 1/4	26 1/4"	62"	372#	$2476	$2824
ARC24615A	31 3/4"	26 1/4"	62"	323#	$2199	$2543
Legal (300 LFI)						
ARC30615S	46"	32 1/4"	62"	484#	$3053	$3401
ARC30615A	39 1/4"	32 1/4"	62"	430#	$2773	$3121

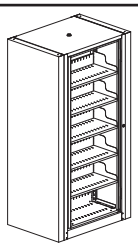

6-Tier Complete						
Letter (288 LFI)						
ARC24726S	37 1/4	26 1/4"	73"	403#	$3132	$3571
ARC24726A	31 3/4"	26 1/4"	73"	347#	$2872	$3310
Legal (360 LFI)						
ARC30726S	46"	32 1/4"	73"	542#	$3958	$4402
ARC30726A	39 1/4"	32 1/4"	73"	478#	$3649	$4096

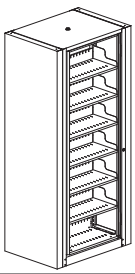

7-Tier Complete						
Letter (336 LFI)						
ARC24827S	37 1/4	26 1/4"	83 1/2"	427#	$3547	$3992
ARC24827A	31 3/4"	26 1/4"	83 1/2"	365#	$3259	$3701
Legal (420 LFI)						
ARC30827S	46"	32 1/4"	83 1/2"	588#	$4398	$4837
ARC30827A	39 1/4"	32 1/4"	83 1/2"	516#	$4048	$4488

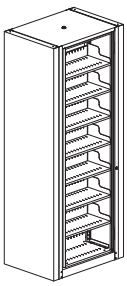

8-Tier Complete						
Letter (384 LFI)						
ARC24938S	37 1/4	26 1/4"	94"	478#	$3980	N/A
ARC24938A	31 3/4"	26 1/4"	94"	408#	$3666	N/A
Legal (480 LFI)						
ARC30938S	46"	32 1/4"	94"	632#	$4954	N/A
ARC30938A	39 1/4"	32 1/4"	94"	550#	$4608	N/A

ARC™ ROTARY FILE

EMPTY CABINET

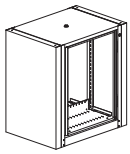

Model No.	W	D	H	Wt.	Knockdown List Price	Assembled List Price "B"
3-Tier Empty						
Letter						
ARC24403ES	37 1/4"	26 1/4"	41"	238#	$1890	$2237
ARC24403EA	31 3/4"	26 1/4"	41"	206#	$1550	$1898
Legal						
ARC30403ES	46"	32 1/4"	41"	326#	$2320	$2667
ARC30403EA	39 1/4"	32 1/4"	41"	286#	$1982	$2330

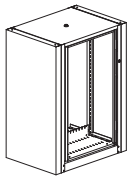

4-Tier Empty						
Letter						
ARC24504ES	37 1/4"	26 1/4"	51"	260#	$1949	$2296
ARC24504EA	31 3/4"	26 1/4"	51"	220#	$1670	$2018
Legal						
ARC30504ES	46"	32 1/4"	51"	348#	$2388	$2734
ARC30504EA	39 1/4"	32 1/4"	51"	300#	$2010	$2359

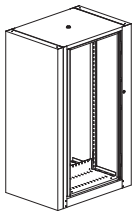

5-Tier Empty						
Letter						
ARC24615ES	37 1/4"	26 1/4"	62"	282#	$2010	$2359
ARC24615EA	31 3/4"	26 1/4"	62"	234#	$1748	$2096
Legal						
ARC30615ES	46"	32 1/4"	62"	368#	$2438	$2784
ARC30615EA	39 1/4"	32 1/4"	62"	314#	$2158	$2505

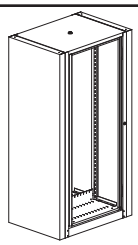

6-Tier Empty						
Letter						
ARC24726ES	37 1/4"	26 1/4"	73"	303#	$2488	$2926
ARC24726EA	31 3/4"	26 1/4"	73"	247#	$2230	$2670
Legal						
ARC30726ES	46"	32 1/4"	73"	399#	$3067	$3509
ARC30726EA	39 1/4"	32 1/4"	73"	335#	$2759	$3202

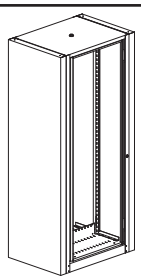

7-Tier Empty						
Letter						
ARC24827ES	37 1/4"	26 1/4"	83 1/2"	323#	$2787	$3228
ARC24827EA	31 3/4"	26 1/4"	83 1/2"	261#	$2500	$2940
Legal						
ARC30827ES	46"	32 1/4"	83 1/2"	423#	$3433	$3874
ARC30827EA	39 1/4"	32 1/4"	83 1/2"	351#	$3094	$3535

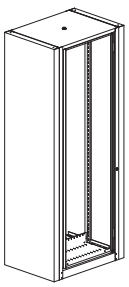

8-Tier Empty						
Letter						
ARC24938ES	37 1/4"	26 1/4"	94"	345#	$3104	N/A
ARC24938EA	31 3/4"	26 1/4"	94"	275#	$2800	N/A
Legal						
ARC30938ES	46"	32 1/4"	94"	437#	$3850	N/A
ARC30938EA	39 1/4"	32 1/4"	94"	355#	$3437	N/A

ARC™ ROTARY FILE

WORK SURFACES FOR 3-,4- AND 5-TIER ARC

Model Number	Description	W	D	H	Wt.	Melamine List Price	Laminate List Price
							Lam Suffix
T2LS	Letter Starter Top Only	37 1/4"	26 1/4"	1"	25#	$318	$414
T2LA	Letter Adder Top	31 3/4"	26 1/4"	1"	22#	$318	$414
T2LSA	Letter Starter/Adder Top Combination	34 1/2"	26 1/4"	1"	25#	$318	$414
T2GS	Legal Starter Top Only	46"	32 1/4"	1"	30#	$318	$414
T2GA	Legal Adder Top	39 1/4"	32 1/4"	1"	28#	$318	$414
T2GSA	Legal Starter/Adder Top Combination	42 5/8"	32 1/4"	1"	30#	$318	$414

Example: When ordering a work surface for a letter unit, order one T2LS. When ordering two letter units, order two T2LSA. When ordering multiple units, order two T2LSA and one T2LA for every additional unit.

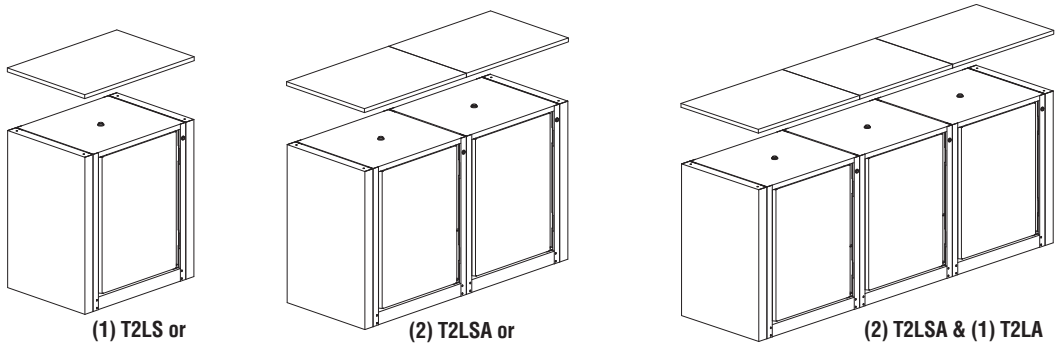

(1) T2LS or (1) T2GS | **(2) T2LSA or (2) T2GSA** | **(2) T2LSA & (1) T2LA or (2) T2GSA & (1) T2GA**

ARC™ ROTARY WORK CENTER

The ARC™ Rotary Work Center provides for storage with a convenient oval-shaped work surface for materials viewing or meeting area requirements. The Work Center is available in letter and legal depths with base units as shown below (AITB3L2 or AITB3G2) or you can design those units to your needs by ordering individual components. Contact Customer Service or Space Planning for assistance if required. Work Center bases are available in all Mayline standard paint colors and tops are available in standard HPL laminates.

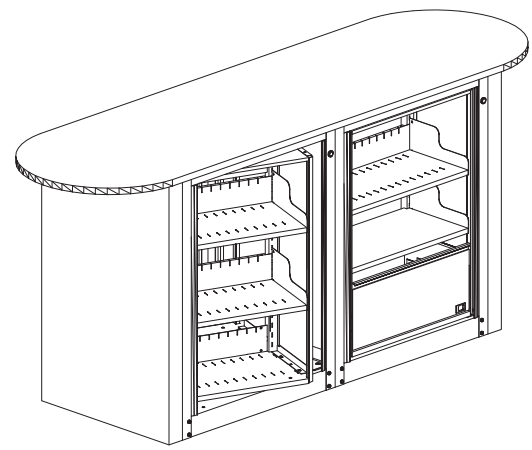

ARC Rotary Work Center (as shown at right) consists of:
- 1 ARC in the Box 3-tier Starter; 1 ARC in the Box 3-tier Adder
- 8 Slotted Shelves with Adjustable File Dividers
- 1 Pass-Through Shelf Unit
- 2 Roll Out Drawers
- 1 Oval Top
- **Base and Top to be ordered separately.**
- Available in Letter or Legal depth.

Model Number	Description	W	D	H	Wt.	List Price
TLWC	Letter Oval Work Center Top	94 3/4"	27 1/4"	1"	38#	$496
TGWC	Legal Oval Work Center Top	117 1/2"	33 1/4"	1"	48#	$653
TLWC01	Letter Rectangular Work Center Top	94 3/4"	27 1/4"	1"	38#	$496
TGWC01	Rectangular Work Center Top	116 1/2"	33 1/4"	1"	48#	$653

LETTER DEPTH ARC WORK CENTER

AITB3L2 (Letter)	2 Base ARC units as shown (3-tier Letter)	$5504
TLWC	1 Oval HPL Top – 94 3/4" x 1" x 27 1/4"	$496

List Price: $6000

LEGAL DEPTH ARC WORK CENTER

AITB3G2 (Legal)	2 Base ARC units as shown (3-tier Legal)	$6867
TGWC	1 Oval HPL Top – 117 1/2" x 1" x 33 1/4"	$653

List Price: $7520

ARC™ ROTARY FILE

COMPONENTS

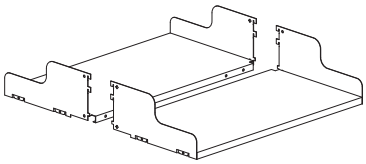

Model No.	W	H	D	Wt.	List Price
Pass Through Shelf					
ARCPS2412	24"	3/4"	12"	18#	$152
ARCPS3015	30"	3/4"	15"	22#	$179

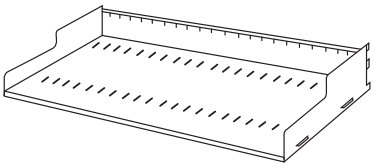

Slotted Shelves (SLF)					
ARC2412SLF	24"	6"	12"	8#	$63
ARC3015SLF	30"	6"	15"	12#	$79

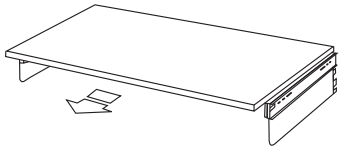

Pull Out Reference Shelves (RS)					
ARC2412RS	24"	—	12"	20#	$263
ARC3015RS	30"	—	15"	23#	$276

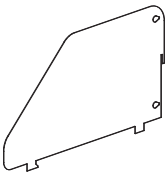

Adjustable File Dividers(DV) – Standard Pack of 6:					
F12DV6	—	6"	12"	6#	$37
F15DV6	—	6"	15"	7 1/2#	$43

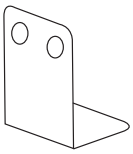

Magnetic File Dividers (MDV)					
AMDV	6 3/4"	7 1/2"	4 1/4"	1 1/2#	$43

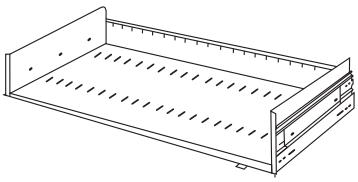

Rollout Shelves (ROSLF)					
ARC2412ROSLF	24"	6"	12"	22#	$263
ARC3015ROSLF	30"	6"	15"	25#	$300

Note: When ordering rollout accessories, **Upright Rollout Supports** must be ordered for each side of the ARC Rotary File with installed rollout accessories. (See page 260)

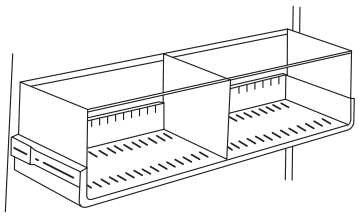

Hanging File Frame Kit (HFK)					
Used in conjunction with rollout shelves as shown.					
ARC2412HFK	24"	9"	12"	11#	$124
ARC3015HFK	30"	9"	15"	13#	$165

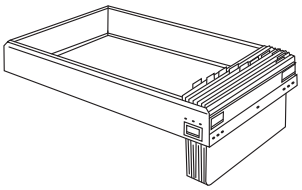

Rollout Hanging Frames (ROHF)					
ARC2412ROHF	24"	—	12"	12 1/2#	$263
ARC3015ROHF	30"	—	15"	13 1/2#	$282

Note: When ordering rollout accessories, **Upright Rollout Supports** must be ordered for each side of the ARC Rotary File with installed rollout accessories. (See page 280)

ARC COMPONENTS (CONTINUED)

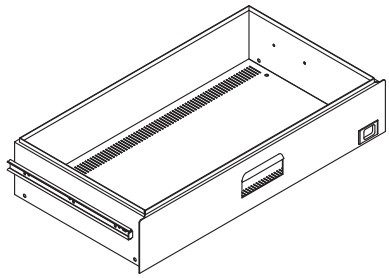

Note: When ordering rollout accessories, **Upright Rollout Supports** must be ordered for each side of the ARC Rotary File with installed rollout accessories. (See below)

Rollout Drawers (ROD)

Model No.	H	D	Wt.	List Price
ARC2412ROD60	6"	12"	18#	$263
ARC3015ROD60	6"	15"	20#	$314
ARC2412ROD75	7 1/2"	12"	23#	$275
ARC3015ROD75	7 1/2"	15"	25#	$320
ARC2412ROD90	9"	12"	27#	$286
ARC3015ROD90	9"	15"	30#	$298
ARC2412ROD105	10 1/2"	12"	32#	$314
ARC3015ROD105	10 1/2"	15"	36#	$341
ARC2412ROD120	12"	12"	37#	$348
ARC3015ROD120	12"	15"	41#	$373

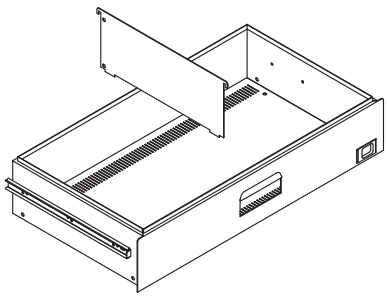

Inserts & Partitions for Rollout Drawers

Model No.	H	D	Wt.	List Price
ARC12P	6"	LTR	9#	$16
ARC15P	6"	LGL	11#	$21

Note: Partitions are to be used in the 6" tall Arc rollout drawers only. Sold individually.

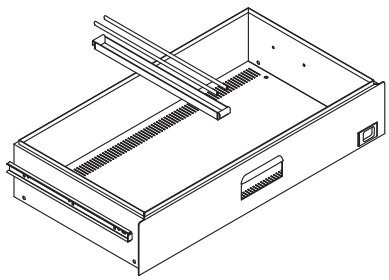

Converter Bar (CB)

Use with rollout drawers or hanging frame kits.
To file front-to-back, use the following converter bars:
- Sold individually, not in pairs.

Model No.	D	Wt.	List Price
ARC12CB	12"	1#	$57
ARC15CB	15"	1#	$61

Upright Rollout Supports (sold in pairs)

Required on each side of ARC Rotary File with Rollout Components.

Model No.	Description	List Price	Model No.	Description	List Price
URS3	3-Tier Supports	$75	**URS6**	6-Tier Supports	$75
URS4	4-Tier Supports	$75	**URS7**	7-Tier Supports	$75
URS5	5-Tier Supports	$75	**URS8**	8-Tier Supports	$75

Center Panels (CP)

Used as security or privacy panel between front and back sections of cabinet.

Model No.	W	H	Wt.	List Price
ARC2440CP	23"	3-tier	8#	$131
ARC3040CP	29"	3-tier	10#	$137
ARC2450CP	23"	4-tier	11#	$137
ARC3050CP	29"	4-tier	14#	$146
ARC2461CP	23"	5-tier	14#	$146
ARC3061CP	29"	5-tier	17#	$153
ARC2472CP	23"	6-tier	19#	$152
ARC3072CP	29"	6-tier	24#	$161
ARC2482CP	23"	7-tier	22#	$168
ARC3082CP	29"	7-tier	28#	$179
ARC2493CP	23"	8-tier	25#	$193
ARC3093CP	29"	8-tier	32#	$207

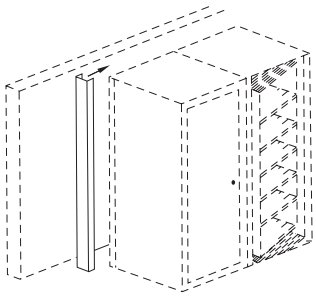

Wall Closure Strips (WCS)

Closes space between ARC unit and wall. Letter: 5 1/4", Legal: 6 1/2".

Model No.	D	H	Wt.	List Price
ARC2440WCS	12"	3-tier	8#	$86
ARC3040WCS	15"	3-tier	10#	$86
ARC2450WCS	12"	4-tier	10#	$86
ARC3050WCS	15"	4-tier	12#	$86
ARC2461WCS	12"	5-tier	12#	$86
ARC3061WCS	15"	5-tier	14#	$86
ARC2472WCS	12"	6-tier	18#	$86
ARC3072WCS	15"	6-tier	20#	$86
ARC2482WCS	12"	7-tier	23#	$102
ARC3082WCS	15"	7-tier	28#	$102
ARC2493WCS	12"	8-tier	27#	$119
ARC3093WCS	15"	8-tier	30#	$119

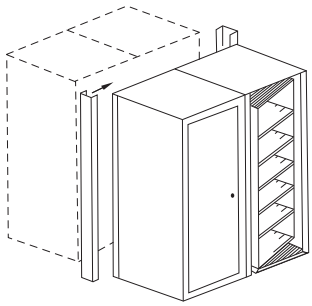

Back-to-Back Closure Strips (BTB)

Used to enclose the space between two ARC units when placed back-to-back.
Letter: 10 1/2", Legal: 13".

Model No.	D	H	Wt.	List Price
ARC2440BTB	LTR	3-tier	14#	$102
ARC3040BTB	LGL	3-tier	16#	$102
ARC2450BTB	LTR	4-tier	16#	$102
ARC3050BTB	LGL	4-tier	18#	$102
ARC2461BTB	LTR	5-tier	18#	$102
ARC3061BTB	LGL	5-tier	20#	$102
ARC2472BTB	LTR	6-tier	32#	$102
ARC3072BTB	LGL	6-tier	32#	$102
ARC2482BTB	LTR	7-tier	40#	$119
ARC3082BTB	LGL	7-tier	40#	$119
ARC2493BTB	LTR	8-tier	48#	$135
ARC3093BTB	LGL	8-tier	48#	$135

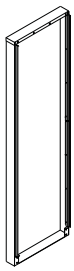

End Panel Assemblies (EP)

Model No.	D	H	Wt.	List Price
ARC2440EP	LTR	3-tier	17#	$382
ARC3040EP	LGL	3-tier	21#	$394
ARC2450EP	LTR	4-tier	21#	$394
ARC3050EP	LGL	4-tier	25#	$410
ARC2461EP	LTR	5-tier	25#	$410
ARC3061EP	LGL	5-tier	28#	$423
ARC2472EP	LTR	6-tier	29#	$423
ARC3072EP	LGL	6-tier	33#	$476
ARC2482EP	LTR	7-tier	32#	$476
ARC3082EP	LGL	7-tier	37#	$492
ARC2493EP	LTR	8-tier	36#	$530
ARC3093EP	LGL	8-tier	42#	$565

FLIP-N-FILE™ CABINET (NOTE: Not on GSA)

GIZA/CAP

- The Flip-n-File™ Cabinet comes fully assembled and ready to use. Choose from a cabinet without doors ("N") or a cabinet with locking doors ("D").
- Shelves are fixed with a 10"H clear spacing between shelves.
- 120 lb. load capacity per shelf.
- Inside width dimension of each shelf is 34".
- **Accommodates letter or legal filing.**
- All units come with 4 file dividers per shelf.
- Additional dividers are available.
- Lock is located at the top of the cabinet.
- Lead-time is 15 working days.
- Standard Finishes: Pebble Gray, Sand Beige and Black Only.
- Inside depth is 15 11/16".

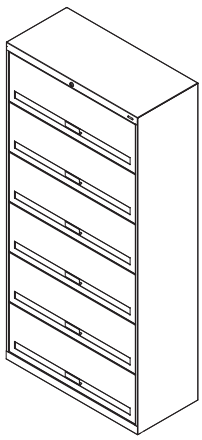

Model No.	Description	Size W	Size H	Size D	Wt.	List Price	List Price Add "K" Suffix Keyed-Alike
FFN5	5 Tier without Doors	36"	63 1/2"	17"	110#	$1425	N/A
FFD5	5 Tier with Doors	36"	63 1/2"	17"	160#	$1977	$2031
FFN6	6 Tier without Doors	36"	75 1/4"	17"	130#	$1587	N/A
FFD6	6 Tier with Doors	36"	75 1/4"	17"	186#	$2190	$2244
FFN7	7 Tier without Doors	36"	87"	17"	142#	$1783	N/A
FFD7	7 Tier with Doors	36"	87"	17"	212#	$2526	$2580
FFD	Additional Dividers					$3	–
FFDMK	Master Key				1#	$17	–

Note: For keyed-alike cabinets, add a "K" to the end of the model number. See final column for keyed-alike pricing (with door only).

FLIP-N-FILE CABINETS ON KWIK TRACK

To increase filing density, Flip-n-File™ shelving can also mount to Kwik-Track systems creating either a bi-file or tri-file sliding shelving system. In either configuration, the rear row of cabinets are stationary with cabinets in front mounted on a sliding carriage on a track mounted to the floor.

- Heavy-duty aluminum track construction supports 3,500 lbs. per carriage.
- Anti-tip built into base for stability and easy installation.
- Systems are complete with cabinets and track. Four dividers per shelf are included.
- Track system has a brushed aluminum finish. Floor mounting hardware included.
- Track adds 2 3/4" to overall height of system.
- All configurations below have doors.

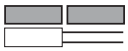

2/1
2 Rows; 2 Fixed, 1 Movable

2/1/1
3 Rows; 2 Fixed, 2 Movable

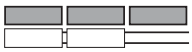

3/2
2 Rows; 3 Fixed, 2 Movable

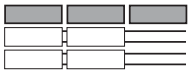

3/2/2
3 Rows; 3 Fixed, 4 Movable

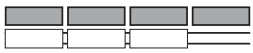

4/3
2 Rows; 4 Fixed, 3 Movable

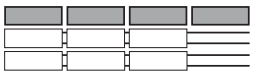

4/3/3
3 Rows; 4 Fixed, 6 Movable

Model No.	Description	Dimensions	Wt.	List Price	List Price Add "K" Suffix Keyed-Alike
FF521	2/1 5-Tier Cabinet	78"W x 36"D	505#	$7303	$7353
FF532	3/2 5-Tier Cabinet	116"W x 36"D	840#	$12352	$12402
FF543	4/3 5-Tier Cabinet	156"W x 36"D	1165#	$17278	$17328
FF5211	2/1/1 5-Tier Cabinet	78"W x 56"D	660#	$10652	$10702
FF5322	3/2/2 5-Tier Cabinet	116"W x 56"D	1150#	$18771	$18821
FF5433	4/3/3 5-Tier Cabinet	156"W x 56"D	1630#	$26646	$26696
FF621	2/1 6-Tier Cabinet	78"W x 36"D	505#	$7942	$7992
FF632	3/2 6-Tier Cabinet	116"W x 36"D	840#	$13415	$13687
FF643	4/3 6-Tier Cabinet	156"W x 36"D	1165#	$18768	$18820
FF6211	2/1/1 6-Tier Cabinet	78"W x 56"D	660#	$11503	$11553
FF6322	3/2/2 6-Tier Cabinet	116"W x 56"D	1150#	$20262	$20312
FF6433	4/3/3 6-Tier Cabinet	156"W x 56"D	1630#	$28774	$28826
FF721	2/1 7-Tier Cabinet	78"W x 36"D	535#	$8947	$9110
FF732	3/2 7-Tier Cabinet	116"W x 36"D	905#	$15094	$15365
FF743	4/3 7-Tier Cabinet	156"W x 36"D	1245#	$21115	$21496
FF7211	2/1/1 7-Tier Cabinet	78"W x 56"D	745#	$12846	$12896
FF7322	3/2/2 7-Tier Cabinet	116"W x 56"D	1295#	$22609	$22661
FF7433	4/3/3 7-Tier Cabinet	156"W x 56"D	1825#	$32129	$32179

Note: For keyed-alike cabinets, add a "K" to the end of the model number. See final column for keyed-alike pricing.

DECORATIVE ENHANCEMENTS

Our designer friendly solution that enhances Mayline's filing and storage products. Aesthetically pleasing magnetic fabric, veneer or vinyl options are available in a wide variety of colors and patterns.
Note: Mayline strongly suggests that Decorative Enhancements should not be utilized with film, diagnostic or electronic media due to the magnetic backing.

- Magnetic fabric or vinyl material installs in minutes.
- Guilford of Maine fabrics, 4 wood grain vinyl patterns, 2 patterned vinyls, and 3 veneer options available.
- Accessories can be used on most of our filing and storage products. (ARC Doors, Mobile End Panels, 4-Post Uprights and Back Panels etc.)
- The magnetic Dry Erase boards include a sandstone finish, eraser and marker.
- Coat Hook will support up to 11 lbs.
- Call Customer Service 800-822-8037 for veneer pricing.

ARC ROTARY CABINETS - DOOR

Model No.	Description	Width	Length	List Price Each
DAD3L	ARC 3-Tier Letter Dr.	25"	34 3/4"	$183
DAD3G	ARC 3-Tier Legal Dr.	31"	34 3/4"	$249
DAD4L	ARC 4-Tier Letter Dr.	25"	45 1/4"	$216
DAD4G	ARC 4-Tier Legal Dr.	31"	45 1/4"	$290
DAD5L	ARC 5-Tier Letter Dr.	25"	55 3/4"	$249
DAD5G	ARC 5-Tier Legal Dr.	31"	55 3/4"	$322
DAD6L	ARC 6-Tier Letter Dr.	24"	66 1/4"	$284
DAD6G	ARC 6-Tier Legal Dr.	30"	66 1/4"	$371
DAD7L	ARC 7-Tier Letter Dr.	24"	76 3/4"	$322
DAD7G	ARC 7-Tier Legal Dr.	30"	76 3/4"	$371
DAD8L	ARC 8-Tier Letter Dr.	24"	87 1/4"	$349
DAD8G	ARC 8-Tier Legal Dr.	30"	87 1/4"	$464

4-POST SHELVING - UPRIGHTS

Model No.	Description	Width	Length	List Price Each
DFU1265	4-Post Uprights Single Face Letter	12"	65"	$183
DFU1565	4-Post Uprights Single Face Legal	15"	65"	$243
DFU2465	4-Post Uprights Double Face Letter	24"	65"	$284
DFU3065	4-Post Uprights Double Face Legal	30"	65"	$371
DFU1276	4-Post Uprights Single Face Letter	12"	76"	$216
DFU1576	4-Post Uprights Single Face Legal	15"	76"	$257
DFU2476	4-Post Uprights Double Face Letter	24"	76"	$322
DFU3076	4-Post Uprights Double Face Legal	30"	76"	$424
DFU1286	4-Post Uprights Single Face Letter	12"	86"	$236
DFU1586	4-Post Uprights Single Face Legal	15"	86"	$284
DFU2486	4-Post Uprights Double Face Letter	24"	86"	$322
DFU3086	4-Post Uprights Double Face Legal	30"	86"	$464
DFU1297	4-Post Uprights Single Face Letter	12"	97"	$257
DFU1597	4-Post Uprights Single Face Legal	15"	97"	$303
DFU2497	4-Post Uprights Double Face Letter	24"	97"	$378
DFU3097	4-Post Uprights Double Face Legal	30"	97"	$512

DECORATIVE ENHANCEMENTS

4-POST SHELVING - BACK PANELS

Model No.	Description	Width	Length	List Price Each
DFB3665	4-Post Back Panel	36"	65"	$405
DFB3676	4-Post Back Panel	36"	76"	$464
DFB3686	4-Post Back Panel	36"	86"	$512
DFB3697	4-Post Back Panel	36"	97"	$552
DFB4265	4-Post Back Panel	42"	65"	$451
DFB4276	4-Post Back Panel	42"	76"	$512
DFB4286	4-Post Back Panel	42"	86"	$566
DFB4297	4-Post Back Panel	42"	97"	$613
DFB4865	4-Post Back Panel	48"	65"	$478
DFB4876	4-Post Back Panel	48"	76"	$558
DFB4886	4-Post Back Panel	48"	86"	$606
DFB4897	4-Post Back Panel	48"	97"	$652

ACCESSORIES - TACK BOARD, DRY ERASE, AND COAT HOOK

Model No.	Description	Width	Length	List Price Each
Tack Board				
D100	Tack Board	12"	40"	$175
D200	Tack Board	24"	40"	$311
Dry Erase				
D300	Dry Erase Sand Stone Finish	12"	40"	$162
D400	Dry Erase Sand Stone Finish	24"	40"	$243
Coat Hook				
D500	Coat Hook	4"	8"	$78

Note: Coat hook will support up to 11 lbs.

MOBILE AISLE - END PANELS FIX

Model No.	Description	Width	Length	List Price Each
DME1265F	Mobile End Panels Single Face Letter	12"	65"	$183
DME1565F	Mobile End Panels Single Face Legal	15"	65"	$243
DME1865F	Mobile End Panels Single Face Heavy-Duty	18"	65"	$260
DME2465F	Mobile End Panels Double Face Letter	24"	65"	$284
DME3065F	Mobile End Panels Double Face Legal	30"	65"	$371
DME3665F	Mobile End Panels Double Face Heavy-Duty	36"	65"	$400
DME1276F	Mobile End Panels Single Face Letter	12"	76"	$216
DME1576F	Mobile End Panels Single Face Legal	15"	76"	$257
DME1876F	Mobile End Panels Single Face Heavy-Duty	18"	76"	$293
DME2476F	Mobile End Panels Double Face Letter	24"	76"	$322
DME3076F	Mobile End Panels Double Face Legal	30"	76"	$424
DME3676F	Mobile End Panels Double Face Heavy-Duty	36"	76"	$460
DME1286F	Mobile End Panels Single Face Letter	12"	86"	$236
DME1586F	Mobile End Panels Single Face Legal	15"	86"	$284
DME1886F	Mobile End Panels Single Face Heavy-Duty	18"	86"	$320
DME2486F	Mobile End Panels Double Face Letter	24"	86"	$349
DME3086F	Mobile End Panels Double Face Legal	30"	86"	$464
DME3686F	Mobile End Panels Double Face Heavy-Duty	36"	86"	$506
DME1297F	Mobile End Panels Single Face Letter	12"	97"	$257
DME1597F	Mobile End Panels Single Face Legal	15"	97"	$303
DME1897F	Mobile End Panels Single Face Heavy-Duty	18"	97"	$346
DME2497F	Mobile End Panels Double Face Letter	24"	97"	$378
DME3097F	Mobile End Panels Double Face Legal	30"	97"	$512
DME3697F	Mobile End Panels Double Face Heavy-Duty	36"	97"	$547

DECORATIVE ENHANCEMENTS

MOBILE AISLE - END PANELS MOVABLE

Model No.	Description	Width	Length	List Price Each
DME1865M	Mobile End Panels Single Face Heavy-Duty	18"	65"	$263
DME2465M	Mobile End Panels Double Face Letter	24"	65"	$284
DME3065M	Mobile End Panels Double Face Legal	30"	65"	$371
DME3665M	Mobile End Panels Double Face Heavy-Duty	36"	65"	$405
DME1876M	Mobile End Panels Single Face Heavy-Duty	18"	76"	$295
DME2476M	Mobile End Panels Double Face Letter	24"	76"	$322
DME3076M	Mobile End Panels Double Face Legal	30"	76"	$424
DME3676M	Mobile End Panels Double Face Heavy-Duty	36"	76"	$464
DME1886M	Mobile End Panels Single Face Heavy-Duty	18"	86"	$322
DME2486M	Mobile End Panels Double Face Letter	24"	86"	$349
DME3086M	Mobile End Panels Double Face Legal	30"	86"	$464
DME3686M	Mobile End Panels Double Face Heavy-Duty	36"	86"	$506
DME1897M	Mobile End Panels Single Face Heavy-Duty	18"	97"	$349
DME2497M	Mobile End Panels Double Face Letter	24"	97"	$378
DME3097M	Mobile End Panels Double Face Legal	30"	97"	$512
DME3697M	Mobile End Panels Double Face Heavy-Duty	36"	97"	$547

INSERTABLES®

GSA

INSERTABLES® SYSTEMS

The unique Insertables® shelving system fits any standard overhead cabinet, or can be used to organize storage cabinet shelves, or even on desktops as a mini-sorter. Store forms, literature, file folders, binders, and more!

- Patented Kwik-Shelf™ system provides locking shelves that adjust on 1/2"H increments.
- Centered thumb-cuts and beveled front shelf flanges allow quick retrieval of materials.
- All-steel construction will last a lifetime.
- Rubber feet add stability and surface protection.
- **Standard Finishes:** Pebble Gray only

Manager's System

Provides 12 pockets, each 10"W x 12"D x 3"H (height adjustable in 1/2" increments).

Model No.	Wt./ Carton	List Price
KB3312D	33# / 1	$401

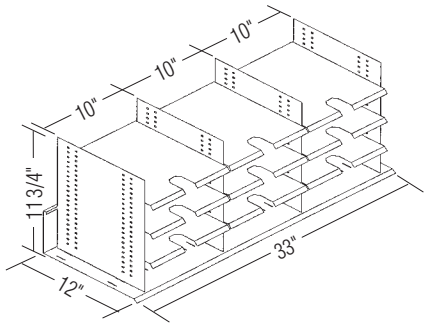

Administrator's System

Provides eight 10"W x 12"D x 3"H and four 5"W x 12"D x 3"H pockets (height adjustable in 1/2" increments). Two dividers.

Model No.	Wt./ Carton	List Price
KB3312E	33# / 1	$448

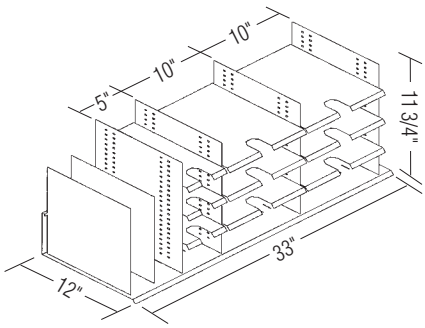

CARTS (NOTE: Not on GSA)

FAST Freight

LAPTOP CART

- Stores up to 24 laptops.
- Perforated steel doors and back panel provide proper ventilation.
- Two UL-listed multi-socket power strips, 24 outlets (timer not included).
- Shelves adjust on 1 1/4"H increments.
- Top is Gray Maytrix and paint is Sand.
- Carb compliant
- 10' Cord

Note: Electrical limitations require that each power strip be plugged into separate circuits, not just separate outlets.

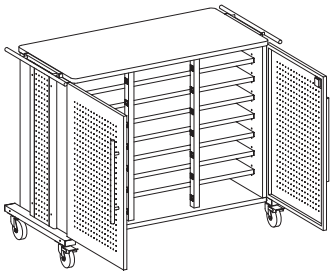

Model No.	Description	Width	Depth	Height	Weight	List Price
LC101	Laptop Cart	50 1/2"	26 1/2"	40"	207#	$1449

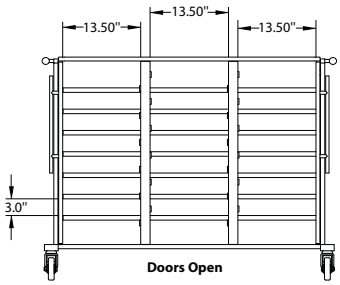

MOBILIZERS™ (NOTE: Not on GSA)

FAST Freight QUICK-SHIP

- Mobile storage for letter size hanging files.
- Heavy-gauge steel construction with 4 non-locking casters.
- Models available with or without sliding top and full-extension drawer.
- Units with lower shelf accommodate full-height binders and all units fit under most desks.
- Units with sliding top and/or drawer feature lock.
- Drawer pull included.
- All models are UPS-able. Ready-to-assemble.
- All models in all finishes are available on both theQuick-Ship and Fast Freight delivery programs with no quantity limitations.

Model No.	Description	Dimensions	Wt.	List Price
Letter Size				
9P600	Open File	27"H x 14"W x 26"D	28#	$185
9P610	File with lid	27"H x 14"W x 26"D	34#	$235
9P620	File with lid and drawer	27"H x 14 3/4"W x 26"D	57#	$402

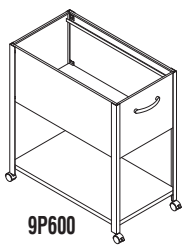
9P600

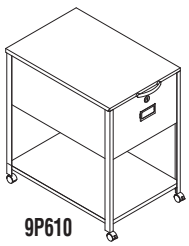
9P610

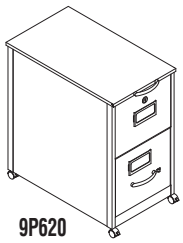
9P620

LATERAL FILES

GSA

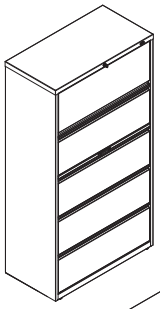

HLT365

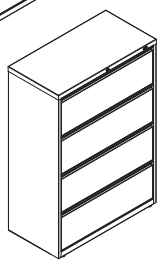

HLT364

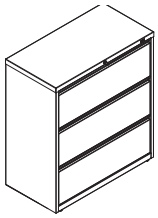

HLT363

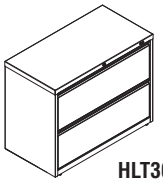

HLT362

- Full drawer extension on steel ball bearing telescoping slides.
- All units feature anti-tipping drawer interlock system that allows only one drawer open at a time.
- Full width recessed designer drawer pulls.
- Side to side rails support letter, legal and/or A4 filing.
- Top drawer of 5-Drawer Lateral is a roll out shelf.
- Extendable posting shelf between third and fourth drawer on 5-Drawer Laterals.
- All files ship keyed random.
- Features adjustable leveling glides.
- Counter weight included to meet ANSI/BIFMA stability requirements.
- Optional front-to-back filing rails available (4-pk), Black only.
- Optional divider kit available (10-pk) Black only.
- UL GREENGUARD GOLD certified.
- **Available in Black, Medium Tone, Desert Sage, and Mist. Allow 4-6 week lead time for orders larger than 30 cabinets.**

Model No.	Description	Dimensions	Wt.	List Price
HLT425	42"W, 5-Drawer Lateral File	42"W x 18 5/8"D x 67 5/8"H	230#	$1727
HLT365	36"W, 5-Drawer Lateral File	36"W x 18 5/8"D x 67 5/8"H	202#	$1613
HLT305	30"W, 5-Drawer Lateral File	30"W x 18 5/8"D x 67 5/8"H	179#	$1515
HLT424	42"W, 4-Drawer Lateral File	42"W x 18 5/8"D x 52 1/2"H	195#	$1447
HLT364	36"W, 4-Drawer Lateral File	36"W x 18 5/8"D x 52 1/2"H	174#	$1281
HLT304	30"W, 4-Drawer Lateral File	30"W x 18 5/8"D x 52 1/2"H	148#	$1112
HLT423	42"W, 3-Drawer Lateral File	42"W x 18 5/8"D x 40 1/4"H	173#	$1108
HLT363	36"W, 3-Drawer Lateral File	36"W x 18 5/8"D x 40 1/4"H	153#	$1029
HLT303	30"W, 3-Drawer Lateral File	30"W x 18 5/8"D x 40 1/4"H	133#	$960
HLT422	42"W, 2-Drawer Lateral File	42"W x 18 5/8"D x 28"H	144#	$995
HLT362	36"W, 2-Drawer Lateral File	36"W x 18 5/8"D x 28"H	123#	$852
HLT302	30"W, 2-Drawer Lateral File	30"W x 18 5/8"D x 28"H	101#	$710
HLTFBR4	Front-to-Back Filing rails (4-pk)	2 3/4"W x 19 1/2"D x 2 3/4"H	2.5#	$50
HLTDV10	Divider kit (10-pk)	5 1/2"W x 13 1/2"D x 1"H	8.5#	$85

LATERAL FILES ON KWIK-TRACK

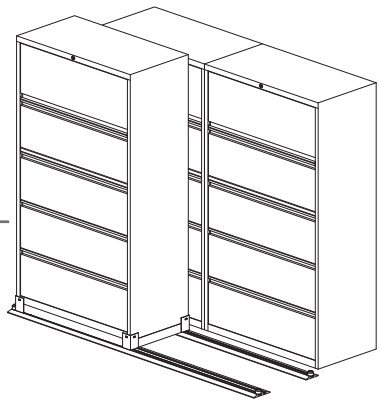

- To increase filing density, lateral files can also mount to Kwik-Track. In either configuration, the rear row of cabinets are stationary with cabinets in front mounted on a sliding carriage on a track mounted to the floor.
- Track and carriage adds 2 3/4" to height of overall system.

Model No.	Description	Dimensions	Wt.	List Price
LATH36521	2/1 Lateral 36"L/5 Drawer System	78"W x 40"D	651#	$1727
LATH365211	2/1/1 Lateral 36"L/5 Drawer System	78"W x 61 1/2"D	888#	$1623
LATH36532	3/2 Lateral 36"L/5 Drawer System	116"W x 40"D	1087#	$1525
LATH365322	3/2/2 Lateral 36"L/5 Drawer System	116"W x 61 1/2"D	1568#	$1447
LATH36543	4/3 Lateral 36"L/5 Drawer System	156"W x 40"D	1521#	$1281
LATH365433	4/3/3 Lateral 36"L/5 Drawer System	156"W x 61 1/2"D	2234#	$1112
LATH42521	2/1 Lateral 42"L/5 Drawer System	90"W x 40"D	740#	$1108
LATH425211	2/1/1 Lateral 42"L/5 Drawer System	90"W x 61 1/2"D	1020#	$1029
LATH42532	3/2 Lateral 42"L/5 Drawer System	137"W x 40"D	1238#	$960
LATH425322	3/2/2 Lateral 42"L/5 Drawer System	137"W x 61 1/2"D	1768#	$995
LATH42543	4/3 Lateral 42"L/5 Drawer System	180"W x 40"D	1728#	$852
LATH425433	4/3/3 Lateral 42"L/5 Drawer System	180"W x 61 1/2"D	2536#	$710

287

MAILROOM FURNITURE

Mailflow Systems®
Mailflow-To-Go™

MAILFLOW SYSTEMS®

Mayline's Mailflow Systems product line offers everything you need for your corporate mail center including sorters, tables, cabinets, carts and more. Optimize mail flow efficiencies while maximizing budget and supporting todays mailroom processses.

CLOSED-BACK SORTERS

- All sorters are 15" deep.
- Sorting shelves are 12"*, 14" or 15" deep. Adjust on 1/2"H increments.
- Sorting shelves have thumb cuts and labeling flanges on the front edge of each shelf.
- Preconfigured models available, or build-your-own by specifying empty and adding components on pages 298 and 299. The letter E designates empty sorters.*
- Sorters are available with locking Plexiglas doors, the letters CP designates preconfigured models with locking doors, and the letters EP designates empty sorters with locking doors.
- **Standard Plexiglas doors are clear.**
- For smoked Plexiglas, add 10%of list and an "S" suffix to Plexiglas door sorter.
- Pricing below is for sorters with and without locking doors.
- 50 lb. weight capacity per shelf.

Closed-Back Sorter (SC7233G)

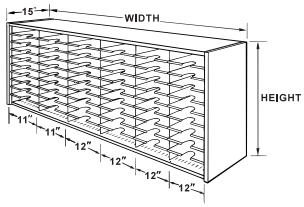

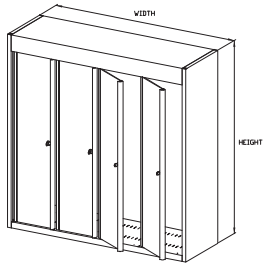

Closed-Back Sorter (SC4833EP)

Model No.	Width	Height	Shelf Depth	No. of 3" High Sorting Pockets	Locking Plexi Doors	Wt.	List Price
SC2424G		24"	15"	14	N	80#	$1265
SC2424CP		(21" inside)	14"	14	Y	90#	$1910
SC2424EP			—	Empty	Y	58#	$1779
SC2424E			—	Empty	Y	48#	$936
SC2433G		33"	15"	20	N	106#	$1569
SC2433CP		(30" inside)	14"	20	Y	116#	$2232
SC2433EP			—	Empty	Y	68#	$1779
SC2433E	**24"**		—	Empty	N	58#	$1068
SC2441G	(22" inside)	41"	15"	24	N	127#	$1762
SC2441CP		(38" inside)	14"	24	Y	137#	$2582
SC2441EP	2 columns of		—	Empty	Y	78#	$2047
SC2441E	11"W shelves		—	Empty	N	68#	$1241
SC2448G		48"	15"	30	N	152#	$1931
SC2448CP		(45" inside)	14"	30	Y	162#	$2902
SC2448EP			—	Empty	Y	88#	$2182
SC2448E			—	Empty	N	78#	$1299
SC3624G		24"	15"	21	N	115#	$1325
SC3624CP		(21" inside)	14"	21	Y	125#	$2748
SC3624EP			—	Empty	Y	77#	$2283
SC3624E			—	Empty	N	67#	$989
SC3633G		33"	15"	30	N	152#	$1744
SC3633CP		(30" inside)	14"	30	Y	162#	$3473
SC3633EP			—	Empty	Y	90#	$2434
SC3633E	**36"**		—	Empty	N	80#	$1258
SC3641G	(34" inside)	41"	15"	36	N	181#	$1845
SC3641CP		(38" inside)	14"	36	Y	191#	$3574
SC3641EP	2 columns of		—	Empty	Y	103#	$2669
SC3641E	11"W shelves		—	Empty	N	93#	$1091
SC3648G	and 1 column of	48"	15"	45	N	218#	$2132
SC3648CP	12"W shelves	(45" inside)	14"	45	Y	228#	$4160
SC3648EP			—	Empty	Y	117#	$2818
SC3648E			—	Empty	N	107#	$1341

Note: All preconfigured models are standard with two columns of 11" wide shelves and the remaining columns with 12" wide shelves. You may receive extra shelves with preconfigured sorters.
*12" deep shelving available in the "build-your-own" format only.

MAILFLOW SYSTEMS®

CLOSED-BACK SORTERS (CONTINUED)

Model No.	Width	Height	Shelf Depth	No. of 3" High Sorting Pockets	Locking Plexi Doors	Wt.	List Price
SC4824G		24"	15"	28	N	150#	$1911
SC4824CP		(21" inside)	14"	28	Y	160#	$3288
SC4824EP			—	Empty	Y	96#	$2836
SC4824E			—	Empty	N	86#	$1166
SC4833G		33"	15"	40	N	198#	$2324
SC4833CP		(30" inside)	14"	40	Y	208#	$3893
SC4833EP			—	Empty	Y	112#	$3019
SC4833E	**48"**		—	Empty	N	102#	$1322
SC4841G	(46" inside)	41"	15"	48	N	235#	$2616
SC4841CP		(38" inside)	14"	48	Y	245#	$4616
SC4841EP	2 columns of		—	Empty	Y	128#	$3357
SC4841E	11"W shelves		—	Empty	N	118#	$1393
SC4848G	and 2 columns	48"	15"	60	N	283#	$3212
SC4848CP	of 12"W shelves	(45" inside)	14"	60	Y	293#	$5255
SC4848EP			—	Empty	Y	145#	$3556
SC4848E			—	Empty	N	135#	$1695
SC6024G		24"	15"	35	N	185#	$2184
SC6024CP		(21" inside)	14"	35	Y	195#	$3946
SC6024EP			—	Empty	Y	115#	$3323
SC6024E			—	Empty	N	105#	$1256
SC6033G		33"	15"	50	N	230#	$2751
SC6033CP		(30" inside)	14"	50	Y	240#	$4834
SC6033EP			—	Empty	Y	120#	$3574
SC6033E	**60"**		—	Empty	N	110#	$1375
SC6041G	(58" inside)	41"	15"	60	N	261#	$3163
SC6041CP		(38" inside)	14"	60	Y	271#	$5590
SC6041EP	2 columns of		—	Empty	Y	125#	$3960
SC6041E	11"W shelves and		—	Empty	N	115#	$1509
SC6048G	3 columns of 12"W	48"	15"	75	N	306#	$3719
SC6048CP	shelves	(45" inside)	14"	75	Y	316#	$6292
SC6048EP			—	Empty	Y	130#	$4229
SC6048E			—	Empty	N	120#	$1899
SC7224G		24"	15"	42	N	214#	$2591
SC7224CP		(21" inside)	14"	42	Y	224#	$4646
SC7224EP			—	Empty	Y	128#	$3877
SC7224E			—	Empty	N	118#	$1439
SC7233G		33"	15"	60	N	269#	$3252
SC7233CP		(30" inside)	14"	60	Y	279#	$5590
SC7233EP			—	Empty	Y	135#	$4180
SC7233E	**72"**		—	Empty	N	125#	$1509
SC7241G	(70" inside)	41"	15"	72	N	309#	$3696
SC7241CP		(38" inside)	14"	72	Y	319#	$6647
SC7241EP	2 columns of		—	Empty	Y	143#	$4646
SC7241E	11"W shelves		—	Empty	N	133#	$1875
SC7248G	and 4 columns of	48"	15"	90	N	364#	$4368
SC7248CP	12"W shelves	(45" inside)	14"	90	Y	374#	$7603
SC7248EP			—	Empty	Y	150#	$4951
SC7248E			—	Empty	N	140#	$1991

Note: All preconfigured models are standard with two columns of 11" wide shelves and the remaining columns with 12" wide shelves. You may receive extra shelves with preconfigured sorters.
*12" deep shelving available in the "build-your-own" format only.

MAILFLOW SYSTEMS®

ELEVATED CLOSED-BACK SORTERS

- All sorters are 15" deep.
- Sorting shelves are 12"*, 14" or 15" deep. Adjust on 1/2"H increments.
- Sorting shelves have thumb cuts and labeling flanges on the front edge of each shelf.
- Preconfigured models available, or build-your-own by specifying empty and adding components on pages 298 and 299. The letter E designates empty sorters.*
- Sorters are available with locking Plexiglas doors, the letters CP designates preconfigured models with locking doors, and the letters EP designates empty sorters with locking doors.
- **Standard Plexiglas doors are clear.**
- For smoked Plexiglas, add 10% of list and an "S" suffix to standard Plexiglas door sorter.
- Elevated sorters offer more workspace, by raising the sorter off the work area.
- Pricing below is for sorters with and without locking doors.

Elevated Closed-Back Sorter (SC7248GH)

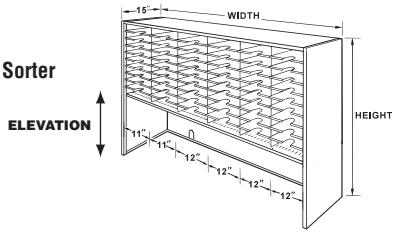

Elevated Closed-Back Sorter (SC4848EPL)

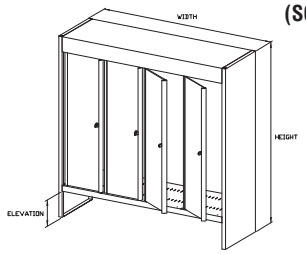

Model No.	Width	Height	Elevation	Shelf Depth	No. of 3" High Sorting Pockets	Locking Plexi Doors	Wt.	List Price
SC2433GL		33"	9"	15"	14	N	95#	$1392
SC2433CPL		(21" inside)		14"	14	Y	105#	$1995
SC2433EPL				—	Empty	Y	68#	$1864
SC2433EL				—	Empty	N	58#	$1068
SC2441GL		41"	8"	15"	20	N	111#	$1741
SC2441CPL		(30" inside)		14"	20	Y	121#	$2482
SC2441EPL				—	Empty	Y	78#	$1995
SC2441EL				—	Empty	N	68#	$1174
SC2441GH		41"	17"	15"	14	N	105#	$1570
SC2441CPH	**24"**	(21" inside)		14"	14	Y	115#	$2265
SC2441EPH	(22" inside)			—	Empty	Y	78#	$1898
SC2441EH				—	Empty	N	68#	$1174
SC2448GL	2 columns of	48"	7"	15"	24	N	132#	$1931
SC2448CPL	11"W shelves	(38" inside)		14"	24	Y	142#	$3019
SC2448EPL				—	Empty	Y	88#	$2349
SC2448EL				—	Empty	N	78#	$1258
SC2448GH		48"	15"	15"	20	N	132#	$1851
SC2448CPH		(30" inside)		14"	20	Y	142#	$2365
SC2448EPH				—	Empty	Y	88#	$2064
SC2448EH				—	Empty	N	78#	$1258
SC3633GL		33"	9"	15"	21	N	128#	$1560
SC3633CPL		(21" inside)		14"	21	Y	138#	$2685
SC3633EPL				—	Empty	Y	90#	$2399
SC3633EL				—	Empty	N	80#	$1174
SC3641GL		41"	8"	15"	30	N	168#	$2013
SC3641CPL		(30" inside)		14"	30	Y	178#	$3288
SC3641EPL				—	Empty	Y	103#	$2582
SC3641EL				—	Empty	N	93#	$1309
SC3641GH		41"	17"	15"	21	N	149#	$1676
SC3641CPH	**36"**	(21" inside)		14"	21	Y	159#	$2956
SC3641EPH	(34" inside)			—	Empty	Y	103#	$2468
SC3641EH				—	Empty	N	93#	$1309
SC3648GL	2 columns of	48"	7"	15"	36	N	198#	$2265
SC3648CPL	11"W shelves	(38" inside)		14"	36	Y	208#	$3859
SC3648EPL	and 1 column of			—	Empty	Y	117#	$2851
SC3648EL	12"W shelves			—	Empty	N	107#	$1425
SC3648GH		48"	15"	15"	30	N	187#	$2185
SC3648CPH		(30" inside)		14"	30	Y	197#	$3288
SC3648EPH				—	Empty	Y	117#	$2600
SC3648EH				—	Empty	N	107#	$1425

*12" deep shelving available in the "build-your-own" format only.

MAILFLOW SYSTEMS®

ELEVATED CLOSED-BACK SORTERS (CONTINUED)

Model No.	Width	Height	Elevation	Shelf Depth	No. of 3" High Sorting Pockets	Locking Plexi Doors	Wt.	List Price
SC4833GL		33"	9"	15"	28	N	160#	$1973
SC4833CPL		(21" inside)		14"	28	Y	170#	$3389
SC4833EPL				—	Empty	Y	112#	$2956
SC4833EL				—	Empty	N	102#	$1322
SC4841GL	**48"**	41"	8"	15"	40	N	224#	$2508
SC4841CPL	(46" inside)	(30" inside)		14"	40	Y	234#	$4030
SC4841EPL				—	Empty	Y	128#	$3188
SC4841EL	2 columns of			—	Empty	N	118#	$1508
SC4841GH	11"W shelves	41"	17"	15"	28	N	193#	$2090
SC4841CPH	and 2 columns	(21" inside)		14"	28	Y	203#	$3626
SC4841EPH	of 12"W shelves			—	Empty	Y	128#	$3038
SC4841EH				—	Empty	N	118#	$1508
SC4848GL		48"	7"	15"	48	N	263#	$3058
SC4848CPL		(38" inside)		14"	48	Y	273#	$4699
SC4848EPL				—	Empty	Y	145#	$3524
SC4848EL				—	Empty	N	135#	$1595
SC4848GH		48"	15"	15"	40	N	241#	$2685
SC4848CPH		(30" inside)		14"	40	Y	251#	$4079
SC4848EPH				—	Empty	Y	145#	$3253
SC4848EH				—	Empty	N	135#	$1595
SC6033GL		33"	9"	15"	35	N	203#	$2314
SC6033CPL		(21" inside)		14"	35	Y	213#	$4046
SC6033EPL				14"	Empty	Y	120#	$3459
SC6033EL				—	Empty	N	110#	$1461
SC6041GL		41"	8"	15"	50	N	248#	$2934
SC6041CPL		(30" inside)		14"	50	Y	258#	$4868
SC6041EPL				—	Empty	Y	125#	$3726
SC6041EL				—	Empty	N	115#	$1595
SC6041GH		41"	17"	15"	35	N	208#	$2489
SC6041CPH	**60"**	(21" inside)		14"	35	Y	218#	$3737
SC6041EPH	(58" inside)			—	Empty	Y	125#	$3524
SC6041EH				—	Empty	N	115#	$1595
SC6048GL	2 columns of	48"	7"	15"	60	N	275#	$3409
SC6048CPL	11"W shelves	(38" inside)		14"	60	Y	285#	$5707
SC6048EPL	and 3 columns			—	Empty	Y	130#	$4128
SC6048EL	of 12"W shelves			—	Empty	N	120#	$1676
SC6048GH		48"	15"	15"	50	N	233#	$3115
SC6048CPH		(30" inside)		14"	50	Y	243#	$5020
SC6048EPH				—	Empty	Y	130#	$3809
SC6048EH				—	Empty	N	120#	$1676
SC7233GL		33"	9"	15"	42	N	237#	$2697
SC7233CPL		(21" inside)		14"	42	Y	247#	$4783
SC7233EPL				—	Empty	Y	135#	$4046
SC7233EL				—	Empty	N	125#	$1577
SC7241GL		41"	8"	15"	60	N	292#	$3537
SC7241CPL		(30" inside)		14"	60	Y	302#	$5707
SC7241EPL				—	Empty	Y	143#	$4362
SC7241EL				—	Empty	N	133#	$1676
SC7241GH		41"	17"	15"	42	N	245#	$2972
SC7241CPH	**72"**	(21" inside)		14"	42	Y	255#	$4849
SC7241EPH	(70" inside)			—	Empty	Y	143#	$4128
SC7241EH				—	Empty	N	133#	$1676
SC7248GL	2 columns of	48"	7"	15"	72	N	332#	$3811
SC7248CPL	11"W shelves	(38" inside)		14"	72	Y	347#	$6714
SC7248EPL	and 4 columns			—	Empty	Y	155#	$4800
SC7248EL	of 12"W shelves			—	Empty	N	140#	$1845
SC7248GH		48"	15"	15"	60	N	300#	$3662
SC7248CPH		(30" inside)		14"	60	Y	315#	$5792
SC7248EPH				—	Empty	Y	155#	$4446
SC7248EH				—	Empty	N	140#	$1845

MAILFLOW SYSTEMS®

OPEN-BACK SORTERS

Open-Back Sorters are typically used where mail is passed through – sorted on one side and collected by the recipient on the other.

- All sorters are 15" deep with 14" deep sorting shelves. Adjust on 1/2"H increments.
- Sorting shelves have thumb cuts and labeling flanges on both front and back of shelves.
- Preconfigured models, designated by the letter **C** are available, or build-your-own by specifying empty sorter designated by the letter **E** and adding components on pages 298 and 299.
- All sorters are available with locking Plexiglas doors, which is designated by the letter **P** suffix.
- **Standard Plexiglas doors are clear.**
- For smoked Plexiglas, add 10% of list and an "**S**" suffix to standard Plexiglas door sorter, ie SN4824EPS
- Elevated sorters offer more workspace, by raising the sorter off the work area.
- Pricing below is for sorters with and without doors.

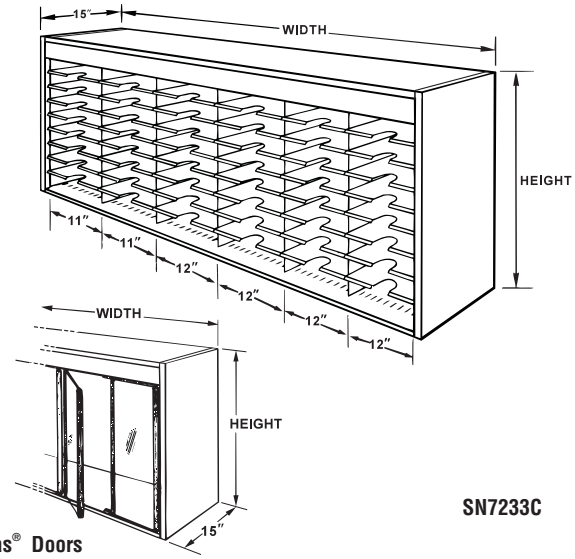

SN7233C

Plexiglas® Doors

Model No.	Width	Height	No. of 3" High Sorting Pockets	Wt.	List Price No Doors	List Price With Doors P Suffix
SN4824E	**48"**	24" (18" inside)	Empty	55#	$1160	$2569
SN4833C	(46" inside)	33"	36	149#	$2164	$2902
SN4833E	2 columns of	(27" inside)	Empty	60#	$1296	$2701
SN4841C	11"W shelves	41"	44	181#	$2591	$3692
SN4841E	and 2 columns	(35" inside)	Empty	65#	$1409	$3038
SN4848C	of 12"W shelves	48"	56	213#	$3034	$4329
SN4848E		(42" inside)	Empty	70#	$1477	$3122
SN6024E	**60"**	24" (18" inside)	Empty	70#	$1199	$3019
SN6033C	(58" inside)	33"	45	188#	$2554	$3692
SN6033E	2 columns of	(27" inside)	Empty	75#	$1318	$3171
SN6041C	11"W shelves	41"	55	238#	$2958	$4314
SN6041E	and 3 columns	(35" inside)	Empty	80#	$1598	$3609
SN6048C	of 12"W shelves	48"	70	285#	$3616	$5371
SN6048E		(42" inside)	Empty	85#	$1676	$3692
SN7224E	**72"**	24" (18" inside)	Empty	85#	$1343	$3508
SN7233C	(70" inside)	33"	54	232#	$2864	$4634
SN7233E	2 columns of	(27" inside)	Empty	95#	$1508	$3709
SN7241C	11"W shelves	41"	66	282#	$3473	$5033
SN7241E	and 4 columns	(35" inside)	Empty	105#	$1762	$4213
SN7248C	of 12"W shelves	48"	84	331#	$4153	$6044
SN7248E		(42" inside)	Empty	115#	$1845	$4314

Note: All preconfigured models are standard with two columns of 11" wide shelves and the remaining columns with 12" wide shelves. You may receive extra shelves with preconfigured sorters.

MAILFLOW SYSTEMS®

ELEVATED OPEN-BACK SORTERS

Open-Back Sorters are typically used where mail is passed through – sorted on one side and collected by the recipient on the other.

- All sorters are 15" deep with 14" deep sorting shelves. Adjust on 1/2"H increments.
- Sorting shelves have thumb cuts and labeling flanges on both front and back of shelves.
- Preconfigured models, designated by the letter **C** are available, or build-your-own by specifying empty sorter designated by the letter **E** and adding components on pages 298 and 299.
- All sorters are available with locking Plexiglas doors, which is designated by the letter **P**.
- **Standard Plexiglas doors are clear.**
- For smoked Plexiglas, add 10% of list and an "**S**" suffix to standard Plexiglas door sorter, ie SN4824EPS
- Elevated sorters offer more workspace, by raising the sorter off the work area.
- Pricing below is for sorters with and without doors.

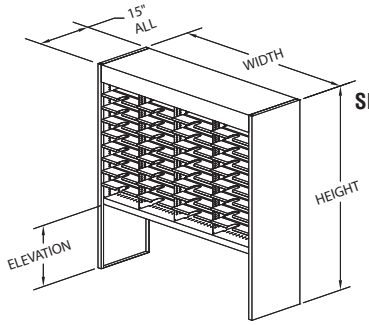

SN7248CH

Model No.	Width	Height	Elevation	No. of 3" High Sorting Pockets	Wt.	List Price No Doors	List Price With Doors P Suffix
SN4833CL		33"	9"	24	103#	$1910	$3459
SN4833EL		(18" inside)		Empty	55#	$1296	$2769
SN4841CL	**48"**	41"	8"	36	132#	$2374	$3828
SN4841EL	(46" inside)	(27" inside)		Empty	60#	$1539	$2936
SN4841CH		41"	17"	24	108#	$2157	$3474
SN4841EH	2 columns of	(18" inside)		Empty	60#	$1409	$2851
SN4848CL	11"W shelves	48"	7"	44	153#	$2848	$4430
SN4848EL	and 2 columns	(35" inside)		Empty	65#	$1642	$3253
SN4848CH	of 12"W shelves	48"	15"	36	137#	$2471	$3859
SN4848EH		(27" inside)		Empty	65#	$1459	$2969
SN6033CL		33"	9"	30	135#	$2234	$4079
SN6033EL		(18" inside)		Empty	75#	$1247	$3241
SN6041CL	**60"**	41"	8"	45	170#	$2789	$4498
SN6041EL	(58" inside)	(27" inside)		Empty	80#	$1598	$3389
SN6041CH		41"	17"	30	140#	$2501	$4112
SN6041EH	2 columns of	(18" inside)		Empty	80#	$1477	$3274
SN6048CL	11"W shelves	48"	7"	55	195#	$3059	$5170
SN6048EL	and 3 columns	(35" inside)		Empty	85#	$1509	$3859
SN6048CH	of 12"W shelves	48"	15"	45	175#	$3018	$4530
SN6048EH		(27" inside)		Empty	85#	$1736	$3440
SN7233CL		33"	9"	36	164#	$2638	$4783
SN7233EL		(18" inside)		Empty	92#	$1508	$3692
SN7241CL	**72"**	41"	8"	54	213#	$3194	$5371
SN7241EL	(70" inside)	(27" inside)		Empty	105#	$1765	$3859
SN7241CH		41"	17"	36	177#	$2888	$4800
SN7241EH	2 columns of	(18" inside)		Empty	105#	$1765	$3692
SN7248CL	11"W shelves	48"	7"	66	247#	$3515	$6044
SN7248EL	and 4 columns	(35" inside)		Empty	115#	$1676	$4362
SN7248CH	of 12"W shelves	48"	15"	54	223#	$3382	$5371
SN7248EH		(27" inside)		Empty	115#	$1866	$3859

Note: All preconfigured models are standard with two columns of 11" wide shelves and the remaining columns with 12" wide shelves. You may receive extra shelves with preconfigured sorters.

MAILFLOW SYSTEMS®

SPECIALIZED SORTERS

Satellite Sorter

Satellite Sorters are ideal for final sorting of mail in any departments.

- 36"W models standard with 11" and 12"W pockets for mail sorting.
- 1" thick standard low-pressure laminate work surface is 27"D and adjusts within cabinet on 1/2"H increments. Add suffix LAM for high pressure laminate.
- All-welded steel cabinet construction.
- Steel back panel of cabinet has one 3" diameter cable management cutout.
- Shelves adjust on 1/2"H increments.

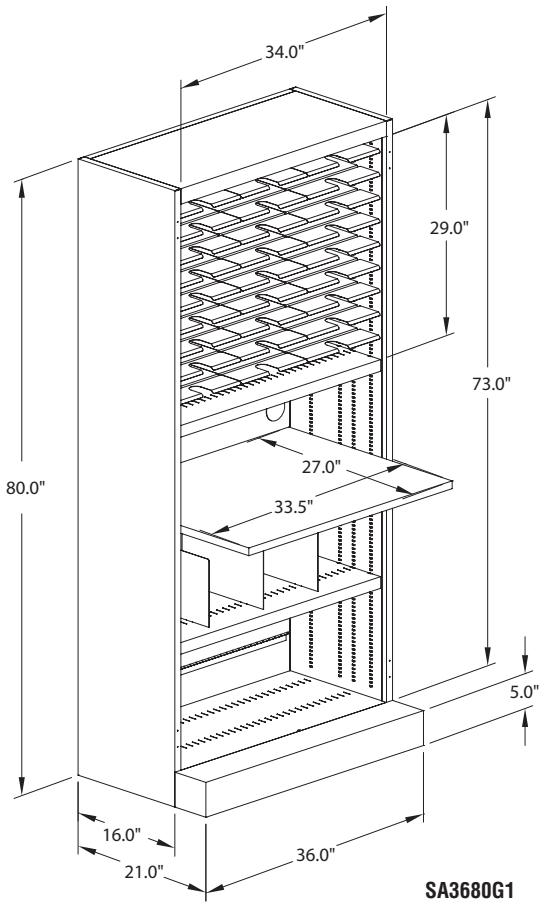

SA3680G1

Model No.		Width	Height	Shelf Depth	No. of 3" High Sorting Pockets	Wt.	Low-Pressure Laminate List Price	High-Pressure Laminate List Price
								LAM Suffix
SA3680G1	2 columns of 11"W	36"	80"	15"	30	240#	$3514	$3619
SA3680L1	shelves and 1 column			12"	30	222#	$3357	$3526
SA3680E1	of 12"W shelves			-	Empty	190#	$2257	$2428

Tub Sorter

The Tub Sorter is for bulk pre-sorting operations using USPS tubs. Capacity is 10 tubs (five tubs per shelf). Angled shelves make sorting easier.
The front shelf edges are protected from tubs by vinyl strips, shelf tops by transparent sheet vinyl. All-welded steel construction; open back.

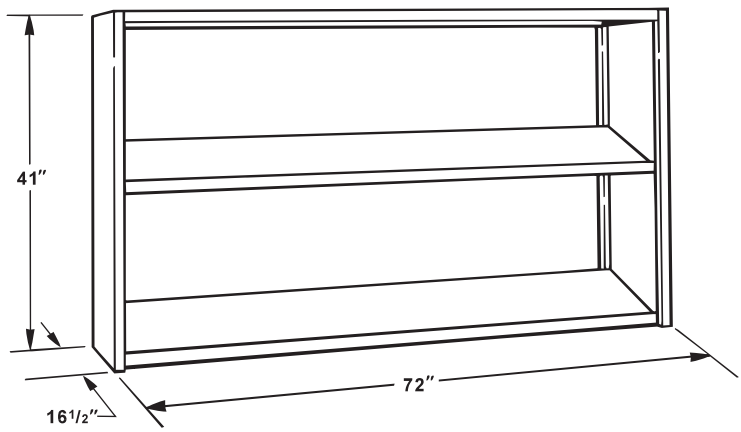

Model No.	Width	Height	Depth	Wt.	List Price
SB7241	72"	41"	16 1/2"	170#	$2193

MAILFLOW SYSTEMS®

SPECIALIZED SORTERS

Freestanding Sorters

Use Freestanding Sorters where space is limited and a work surface is not required.

- Preconfigured models come standard with 3"H pockets in either letter (12"D) or legal (15"D) depths. Adjust on 1/2"H increments.
- All-welded steel cabinet construction.
- For other Freestanding Sorter models, see F/S Cabinets.

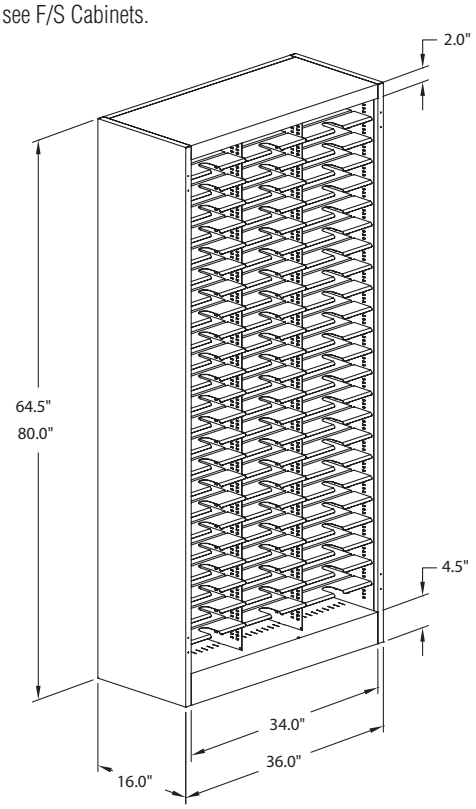

SF3680B

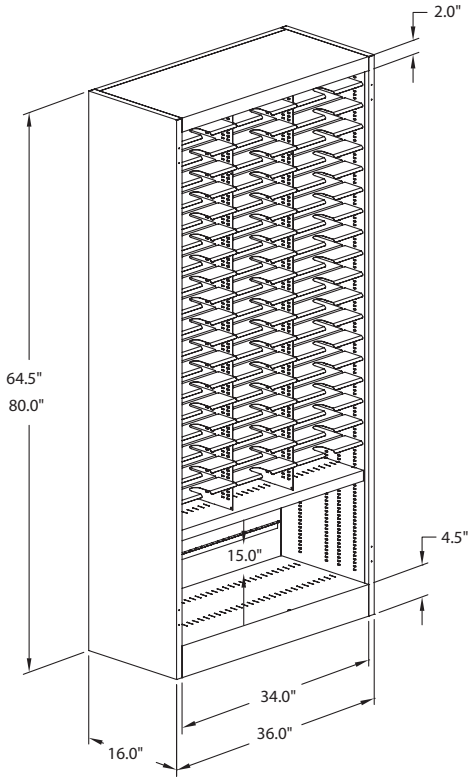

SF3680D

Model No.		Width	Height	Shelf Depth	No. of 3" High Sorting Pockets	Wt.	List Price
SF3665BL1	2 columns of 11"W shelves and 1 column of 12"W shelves	36"	64 1/2"	12"	57	292#	$3131
SF3665DL1					45	273#	$3003
SF3665BG1				15"	57	312#	$3453
SF3665DG1					45	288#	$3277
SF3680BL1	2 columns of 11"W shelves and 1 column of 12"W shelves	36"	80"	12"	72	414#	$3666
SF3680DL1					57	397#	$3468
SF3680BG1				15"	72	444#	$3963
SF3680DG1					57	422#	$3706

MAILFLOW SYSTEMS®

SHELVES AND SHELF SUPPORTS

Shelves

The patented Kwik-Shelf™ shelving system is the key to the space-saving efficiency and improved productivity provided by Mayline sorters.

- All shelves lock in place and won't pull out when retrieving mail.
- Shelves can be removed for easy height adjustment on 1/2" increments.
- All shelves have centered thumb cut for quick one-handed retrieval of mail.
- Front edge of shelves has a 45˚ beveled labeling flange for easy reading of labels and allows mail from pocket below to pass under above shelf without hanging up.
- Heavy-duty, 20-gauge shelves with V-groove hold up to 75 lbs. per pocket.

Note: Kwik-Shelf system not compatible with shelves shipped prior to October 1995.

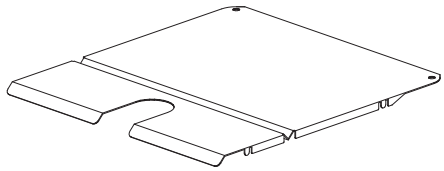

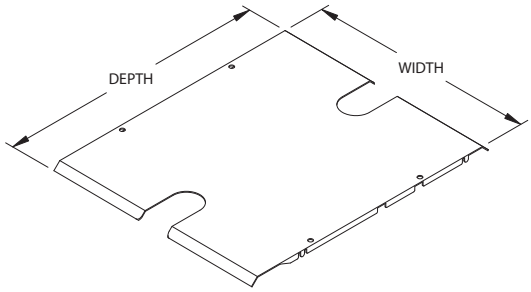

Shelves for Open-Back Sorters, Plex Door Units Included

6-Shelf Package

Model No.	Width	Depth	Wt. per shelf	List Price
1114P06	11"	14 1/2"	2.0#	$149
1214P06	12"	14 1/2"	2.5#	$155

Shelves for Closed-Back Sorters with Doors

6-Shelf Package

Model No.	Width	Depth	Wt. per shelf	List Price
1114SDP06	11"	14"	2.0#	$217
1214SDP06	12"	14"	2.5#	$233

Shelves for Non-Plex Door Closed-Back Sorters

6-Shelf Package

Model No.	Width	Depth	Wt. per shelf	List Price
0412P06	4"	12"	.5#	$82
0512P06	5"	12"	.75#	$89
0515P06	5"	15"	1.0#	$93
0612P06	6"	12"	.75#	$92
0712P06	7"	12"	1.0#	$94
0812P06	8"	12"	1.05#	$111
0912P06	9"	12"	1.05#	$121
0915P06	9"	15"	2.0#	$141
1012P06	10"	12"	1.15#	$129
1015P06	10"	15"	1.5#	$148
1112P06	11"	12"	1.25#	$136
1115P06	11"	15"	1.65#	$149
1212P06	12"	12"	1.4#	$138
1215P06	12"	15"	1.75#	$155
1412P06	14"	12"	2.3#	$187
1415P06	14"	15"	2.75#	$205
1515P06	15"	15"	2.9#	$227
1612P06	16"	12"	2.8#	$217
1615P06	16"	15"	3.0#	$245

- Also available in 12 or 18 shelf packages.

To design your own sorter configuration
(different from preconfigured models listed in pages 290-291).

1. Assess the volume and size of your mail. Then determine the size and number of pockets you'll need, considering each pocket's height, shelf width and shelf depth.
2. Select an empty sorter from pages 290-291 and configure it with the shelves sized from step 1. Try to use (but not exceed) the full interior space of each sorter. Specify shelf supports (one less than the number of columns of shelves) and shelves as shown on this page.
3. If you need assistance, contact space planning at spaceplanning@mayline.com.

MAILFLOW SYSTEMS®

SHELVES AND SHELF SUPPORTS

Shelf Supports

Shelf Supports divide a sorter into columns, and support the shelves within each column.

- Shelf supports are adjustable in 1" horizontal increments to fit various shelf widths.
- Each support is slotted at 1/2" vertical increments for shelf adjustment.
- Shelf support models are based on sorter type, height, and shelf depth.
- When ordering, remember that the two end shelf supports are included with each sorter.

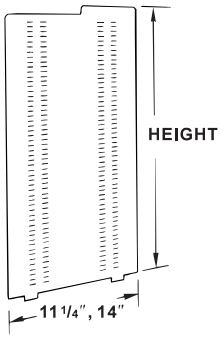

Shelf Supports

(available in packages of 1, 2, 3, 4, or 5 units only)

Sorter Type	Ht.	For Shelf Depth of	Wt. per Shelf	1-Unit Package Model No.	List Price	2-Unit Package Model No.	List Price	3-Unit Package Model No.	List Price	4-Unit Package Model No.	List Price	5-Unit Package Model No.	List Price
Closed-Back	21"	12"	5.4#	**SS24LM01**	$47	**SS24LM02**	$93	**SS24LM03**	$140	**SS24LM04**	$190	**SS24LM05**	$235
		15"	8.4#	**SS24GM01**	$57	**SS24GM02**	$116	**SS24GM03**	$173	**SS24GM04**	$233	**SS24GM05**	$288
	30"	12"	8.0#	**SS33LM01**	$55	**SS33LM02**	$112	**SS33LM03**	$167	**SS33LM04**	$226	**SS33LM05**	$278
		15"	10.5#	**SS33GM01**	$68	**SS33GM02**	$136	**SS33GM03**	$196	**SS33GM04**	$270	**SS33GM05**	$333
	38"	12"	9.5#	**SS41LM01**	$68	**SS41LM02**	$136	**SS41LM03**	$196	**SS41LM04**	$270	**SS41LM05**	$333
		15"	12.6#	**SS41GM01**	$79	**SS41GM02**	$159	**SS41GM03**	$235	**SS41GM04**	$311	**SS41GM05**	$391
	45"	12"	11.0#	**SS48LM01**	$79	**SS48LM02**	$159	**SS48LM03**	$235	**SS48LM04**	$311	**SS48LM05**	$391
		15"	14.8#	**SS48GM01**	$92	**SS48GM02**	$180	**SS48GM03**	$270	**SS48GM04**	$357	**SS48GM05**	$446
Open-Back & Plexi Back	21"	14 1/2"	8.0#	**SS24N01**	$57	**SS24N02**	$116	**SS24N03**	$173	**SS24N04**	$233	**SS24N05**	$288
	30"	14 1/2"	10.0#	**SS33N01**	$68	**SS33N02**	$136	**SS33N03**	$196	**SS33N04**	$270	**SS33N05**	$333
	38"	14 1/2"	12.0#	**SS41N01**	$79	**SS41N02**	$159	**SS41N03**	$235	**SS41N04**	$311	**SS41N05**	$391
	45"	14 1/2"	14.0#	**SS48N01**	$93	**SS48N02**	$186	**SS48N03**	$270	**SS48N04**	$367	**SS48N05**	$458

SORTER ACCESSORIES

Label Holders

Transparent, self-adhesive Label Holders fit securely on beveled shelf front. A blank, white insert with four sides is included. Package of 20. Choose from self-adhesive, magnetic, or velcro models.

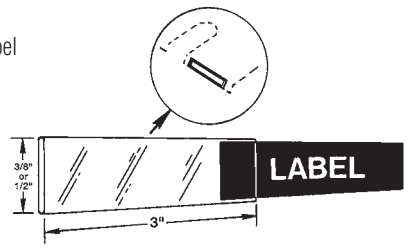

Model No.	Type	Width	Height	Wt.	List Price
90145	Adhesive	3"	3/8"	1 oz.	$28
911785	Magnetic	3"	1/2"	3 oz.	$45
922VEL	Velcro	3"	1/2"	3 oz.	$53

Extra Labels

Set of label inserts in six colors (white, orange, blue, yellow, pink and green), in microperforated, 8 1/2" x 11" sheets. 14 four-sided blank label inserts per color, 84 per set. Fit in label holders (above). Use with PC and ink jet or laser printer.

Model No.	Type	Width (Ea. Label)	Height (Ea. Label)	Wt.	List Price
90155	Adhesive – Colored	3"	3/8"	1 oz.	$5
911885	Magnetic – Colored	3"	1/2"	1 oz.	$5
90154	Adhesive – White	3"	3/8"	1 oz.	$5
911884	Magnetic – White	3"	1/2"	1 oz.	$5

MAILFLOW SYSTEMS®

SORTER ACCESSORIES (CONTINUED)

Display Boards

Use overhead Display Boards to post sorting instructions, etc.; they're easy to read, yet out of the way. Letter-sized sheets fit between steel frame and protective Plexiglas® cover. Mount to top of the sorter, hardware provided. Add 11 1/4" to the height of any sorter. Field-installed.

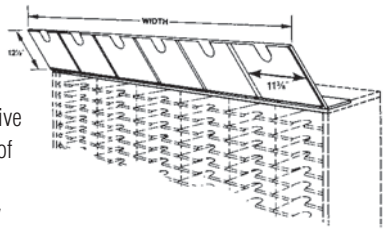

Model No.	Width	No. of Columns	Wt.	List Price
ADB3	36"	3	11#	$387
ADB4	48"	4	14#	$478
ADB5	60"	5	18#	$584
ADB6	72"	6	22#	$614

Task Lights

Task Lights illuminate worksurfaces under elevated sorters or flipper door units. Standard with 10' cord and wire management clip. White frame. UL-listed. Field-installed.

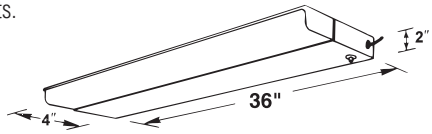

Model No.	Width	Wt.	List Price
2504K	24"	4#	$181
3704K	36"	8#	$233
4904K	48"	10#	$288

*48" light for use with 60" or 72" units only.
*36" light for use with 48" units.

Tackboards

Tackboards are field-installed on the back panel of 15"-17" high elevated sorters, and flipper door units in the supervisor's workstation. For displaying notices, etc., and to improve acoustics. Gray mix fabric. All 13 1/2" H.

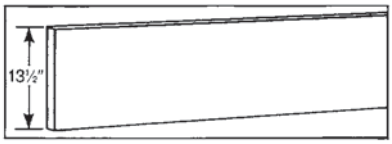

Model No.	Width	Wt.	List Price
ATB3FK	34"	6#	$365
ATB4FK	46"	9#	$438
ATB5FK	58"	12#	$511
ATB6FK	70"	15#	$555

MAILFLOW SYSTEMS®

TABLES

Built to support heavily loaded sorters or machines, Mayline Mailflow System tables are available in several styles and sizes.

- Table frames are of all-welded 18-gauge steel construction with an under-top reinforcement of 12-guage steel.
- Work surfaces are of 1" thick thermally fused low-pressure laminate with medium desinty wood cores as standard.
- Tops have radiused 3mm PVC edging guaraneed not to chip, crack, or peel.
- Top overhangs frame by 1" front and back and 1/8" on the sides.
- Optional grommet available.
- Back panel on all tables come with 3 knockouts for wire management.
- Optional adjustable shelf kits available.
- 1,150 lb capacity, evenly distributed.

See pages 304-305 for Table Accessories.

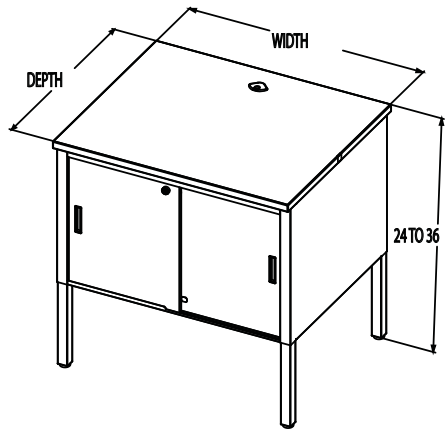

Storage Tables

Storage Tables provide a large storage space (28" deep by 19" high) for immediate access to needed supplies such as bags, cartons, envelopes, etc. Available with locking doors to hide clutter and secure contents. 1 1/2" square, 16 gauge chrome legs adjust from 24" to 36" on 1" increments. Call Customer Service for other height ranges. For a stylish front edge, high pressure laminate or additional wire management capabilities available, please see below. Master key not available. Adjustable shelf kits sold seperately, see page 329 for compatible sizes.

Model No.	Width X Depth	Doors	Wt./Cartons	Low-Pressure Laminate List Price	Std. Laminate List Price
		D Suffix			H Suffix
TSA3630	36" x 30"	No	129#/1	$1611	$1849
TSA3636	36" x 36"	No	133#/1	$1847	$2110
TSA3630D	36" x 30"	Yes w lock	146#/1	$2047	$2285
TSA3636D	36" x 36"	Yes w lock	150#/1	$2309	$2548
TSA4830	48" x 30"	No	155#/1	$1782	$2021
TSA4836	48" x 36"	No	158#/1	$2086	$2309
TSA4830D	48" x 30"	Yes w lock	172#/1	$2292	$2535
TSA4836D	48" x 36"	Yes w lock	185#/1	$2579	$2579
TSA6030	60" x 30"	No	180#/1	$2008	$2274
TSA6036	60" x 36"	No	185#/1	$2324	$2584
TSA6030D	60" x 30"	Yes w lock	198#/1	$2555	$2815
TSA6036D	60" x 36"	Yes w lock	203#/1	$2872	$3137
TSA7230	72" x 30"	No	230#/1	$2244	$2541
TSA7236	72" x 36"	No	238#/1	$2582	$2879
TSA7230D	72" x 30"	Yes w lock	250#/1	$2817	$3114
TSA7236D	72" x 36"	Yes w lock	258#/1	$3148	$3445

Grommet

For additional wire management select a grommet. Grommets are located towards the rear and positioned in the center of the table (Black only).

Model No. Suffix	Description	List Price
G	Multi use grommet (Black)	$28

HOW TO SPECIFY

Start with base model number and ***SELECT ONE CODE FROM EACH OF THE OPTIONS*** to complete your final model number for ordering:

Select MODEL NUMBER	Option 1 Door	Option 2 Laminate	Option 3 Grommet
(ie., TSA6030)	**D =** Locking doors	**H =** High pressure laminate	**G =** Table top grommet
	Blank = No doors	**Blank =** Low pressure laminate	**Blank =** No grommet

The final Model number for a base product with TSA6030 with the highlighted options would be TSA6030DHG.

MAILFLOW SYSTEMS®

Work Tables

Work Tables are functional yet economical. They support sorters or machines and are enclosed on three sides, making them convenient for storing carts or other large objects on the floor. For a stylish front edge or additional wire management capabilities, please see below.

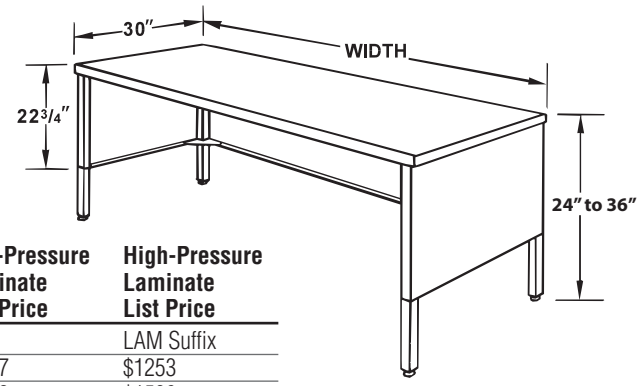

Model No.	Width	Wt.	Low-Pressure Laminate List Price	High-Pressure Laminate List Price
				LAM Suffix
TW30	30"	66#	$1127	$1253
TW36	36"	76#	$1292	$1530
TW48	48"	94#	$1375	$1616
❖**TW60**	60"	122#	$1598	$1864
❖**TW72**	72"	150#	$1814	$2109

STORAGE TABLES

Pedestal Tables

For Supervisor's Workstation, or for filing or storage at any workstation. Suspended pedestal, with one box and one file drawer, lock included. Field installed; can be mounted on either left or right side, or on both sides. Pedestal measures 15 1/4"W x 21 3/4"D x 19 3/8"H.

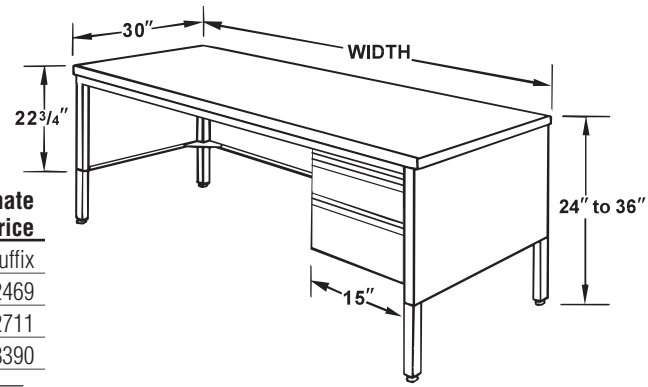

Model No.	Width	Wt.	Low-Pressure Laminate List Price	Std. Laminate List Price
				LAM Suffix
TP48	48"	138#	$2224	$2469
TP60	60"	166#	$2444	$2711
TP72	72"	194#	$3096	$3390
APED1	Pedestal only	48#	$902	—

TABLE AND CONSOLE ACCESSORIES

Wrapping Tables

Wrapping Tables are specially designed to accommodate either 24" or 36" paper rolls below the table top work surface. This keeps the entire top area clear for the wrapping and handling of packages. Tables for 24" paper rolls have a left side slot; tables for 36" paper rolls offer a rear slot. There is extra storage room for supplies inside all models. Optional sliding doors with locks.

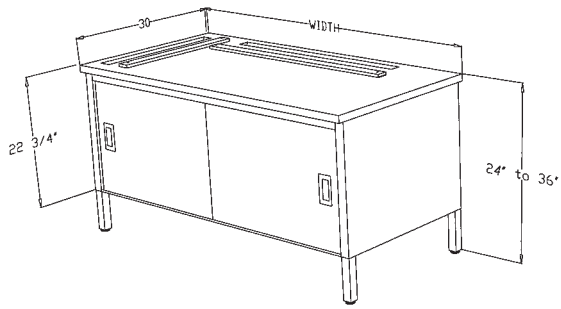

Model No.	Width	Paper Size	Doors	Wt.	Low-Pressure Laminate List Price	High-Pressure Laminate List Price
						LAM Suffix
TR60LS		24" Wide	Yes w/ lock	198#	$3186	$3461
TR60NS	60"	(side slot)	No	180#	$2661	$2862
TR60LR		36" Wide	Yes w/ lock	198#	$3260	$3532
TR60NR		(rear slot)	No	180#	$2731	$3003
TR72LS		24" Wide	Yes w/ lock	250#	$3453	$3757
TR72NS	72"	(side slot)	No	230#	$2881	$3183
TR72LR		36" Wide	Yes w/ lock	250#	$3524	$3817
TR72NR		(rear slot)	No	230#	$2957	$3253

❖ *Indicates Quick-Ship models.*

MAILFLOW SYSTEMS®

CORNER PLATFORM

Supports 24"- wide sorter in a corner when used in L-shaped or U-shaped sorter layouts against a wall. The 32" square footprint provides better clearance at the sides of the sorter for more efficient sorting and retrieval. The TCNR Corner Platform is less expensive than the 30" x 30" TW30 Work Table, but installation is more complex.

When sorters will be in the open, or visible from the rear; or if the corner configuration will be used for a worksurface only, and not to support a sorter, we recommend specifying the TW30 Work Table instead.

The Corner Platform is supported by one leg in the rear corner, and by brackets attached to the tables on both sides. A filler panel is included (fills base-to-top gap in front between adjacent tables). Field installed.

Adjustable 1" increments, 24"- 36" H

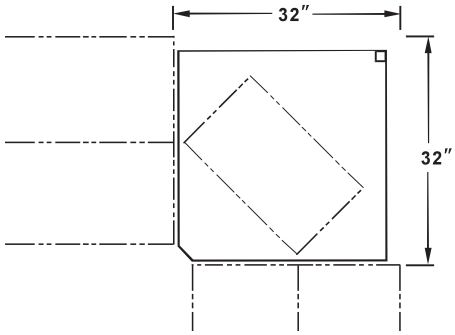

Model No.	Width	Wt.	Low-Pressure Laminate List Price	High -Pressure Laminate List Price
				LAM Suffix
TCNR	30" x 30" (fits in 32" x 32" space)	40#	$774	$1036

CONSOLES

Consoles are built to support heavily loaded sorters or machines, Mayline Mailflow Systems Consoles are available in several styles and sizes. Each console has full-height end panels with a 4" recessed toe space for a clean built-in look.

- Top overhangs frame by 1" front and back and 1/8" on the sides. When placed side-by-side they give the appearance of built-in counters.
- Tables frames are of all-welded, 18-gauge steel construction with an under-top reinforcement of 12-gauge steel.
- Work surfaces are standard 1" thick thermally fused low-pressure laminate with medium density wood cores.
- Tops have radiused 3mm PVC edging guaranteed not to chip, crack, or peel.
- Standard 30" depth is available in 30" or 36" heights.
- Optional grommet available.
- Back panels have 3 standard knockouts for wire management.
- Optional adjustable shelf kits available. Order seperately (page 304).
- Optional sliding doors with locks available.

See pages 304-305 for Table Accessories.

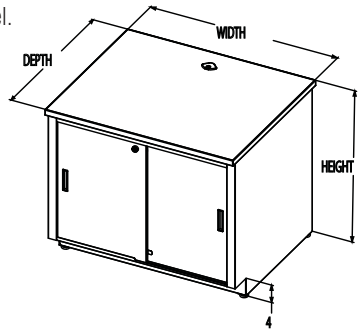

Storage Consoles

Model No.	Width X Height X Depth	Doors	Wt.	Low-Pressure Laminate List Price	High-Pressure Laminate List Price
		D Suffix			H Suffix
MC363030	36" x 30" x 30"	No	126#	$1676	$1912
MC363630	36" X 36" x 30"	No	142#	$1845	$2020
MC363030D	36" x 30" x 30"	Yes /lock	141#	$2182	$2420
MC363630D	36" X 36" x 30"	Yes /lock	156#	$2349	$2586
MC483030	48" x 30" x 30"	No	155#	$1937	$2184
MC483630	48" X 36" x 30"	No	181#	$2222	$2470
MC483030D	48" x 30" x 30"	Yes /lock	172#	$2546	$2737
MC483630D	48" X 36" x 30"	Yes /lock	188#	$2830	$3074
MC603030	60" x 30" x 30"	No	184#	$2051	$2324
MC603630	60" X 36" x 30"	No	201#	$2330	$2597
MC603030D	60" x 30" x 30"	Yes /lock	203#	$2635	$2898
MC603630D	60" X 36" x 30"	Yes /lock	220#	$2546	$3153
MC723030	72" x 30" x 30"	No	213#	$2295	$2591
MC723630	72" X 36" x 30"	No	232#	$2603	$2896
MC723030D	72" x 30" x 30"	Yes /lock	234#	$2916	$3211
MC723630D	72" X 36" x 30"	Yes /lock	253#	$3214	$3510

HOW TO SPECIFY

Start with base model number and ***SELECT ONE CODE FROM EACH OF THE OPTIONS*** to complete your final model number for ordering:

Select MODEL NUMBER (ie., MC603036)	Option 1 Door	Option 2 Laminate	Option 3 Grommet
	D = Locking doors	**H =** High pressure laminate	**G =** Table top grommet
	Blank = No doors	**Blank =** Low pressure laminate	**Blank =** No grommet

The final Model number for a base product with MC603036 with the highlighted options would be MC603036DHG.

MAILFLOW SYSTEMS®

TAMBOUR DOOR STORAGE CONSOLE

• Standard door colors: Mist, Graphite, Pebble Gray and Sand **only**.
Note: All internal components are Graphite.

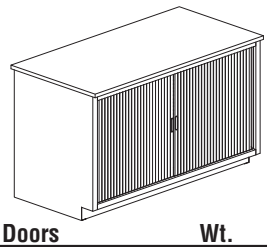

Model No.	Width	Height	Depth	Doors	Wt.	Low-Pressure Laminate List Price	High-Pressure Laminate List Price
							LAM Suffix
CL48T	48"	30"	30"	Yes w/ lock	172#	$2957	$3184
CH48T	48"	36"	30"	Yes w/ lock	188#	$3224	$3453
CL60T	60"	30"	30"	Yes w/ lock	203#	$3039	$3288
CH60T	60"	36"	30"	Yes w/ lock	220#	$3276	$3525
CL72T	72"	30"	30"	Yes w/ lock	234#	$3299	$3580
CH72T	72"	36"	30"	Yes w/ lock	253#	$3500	$3780

TAMBOUR DOOR STORAGE CONSOLE ADJUSTABLE SHELF KIT

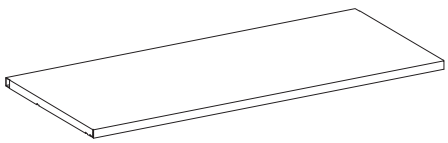

Model No.	Width	Wt.	List Price
CTS36	31"	10#	$175
CTS60	55"	20#	$211
CTS72	67"	25#	$229

Note: Shelf is available in Graphite and can only be used with Tambour Door Storage Console.

STORAGE TABLE & CONSOLE ADJUSTABLE SHELF KIT

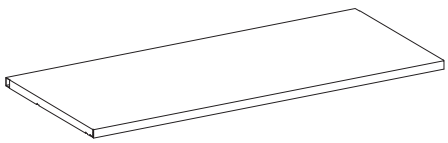

Model No.	Height	Width	Wt.	List Price
TSK3630	32 5/16"	24"	20#	$237
TSK4830	44 5/16"	24"	27#	$259
TSK6030	56 5/16"	24"	33#	$274
TSK7230	68 5/16"	24"	40#	$292
TSK3636*	32 5/16"	30"	23#	$267
TSK4836*	32 5/16"	30"	23#	$299
TSK6036*	56 5/16"	30"	40#	$316
TSK7236*	68 5/16"	30"	48#	$333

Note: 24" D shelf can only be used with the 30"D Storage Table and Sliding Door Console.
* 30"D Shelf can only be used with 36"D

Accessory Platforms

Use on tables to put PC monitors, printers, etc. at good viewing height; keep work surface open for machines, etc. 15" deep; full-length paper feed slot. All-welded steel construction.

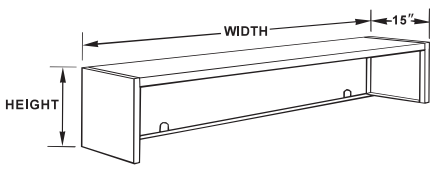

Model No.	Height	Width	Wt.	List Price
AP3017		30"	28#	$655
AP3617		36"	35#	$672
AP4817	17 1/4"	48"	43#	$730
AP6017	(16" inside)	60"	46#	$799
AP7217		72"	55#	$890
AP3024		30"	36#	$686
AP3624		36"	45#	$709
AP4824	24"	48"	55#	$800
AP6024	(22 3/4"	60"	59#	$874
AP7224	inside)	72"	70#	$980

Grommet

For additional wire management select a grommet. Grommets are located towards the rear and positioned in the center of the table (Black only).

Model No. Suffix	Description	List Price
G	Multi use grommet (Black)	$28

MAILFLOW SYSTEMS®

MAILROOM TABLE ACCESSORIES

Dump Rails

For mail collection. The three-sided version provides easier access; the four-sided version is used for high-volume applications. 6" high by 3/4" thick with complementary-colored T-molding. Field-installed.

Model No.	Style	Width	Wt.	Low-Pressure Laminate List Price	High-Pressure Laminate List Price
					LAM Suffix
ADR33		36"	19#	$347	$469
ADR34		48"	22#	$387	$495
ADR35	3-sided	60"	25#	$417	$509
ADR36		72"	27#	$448	$536
ADR2	Side Rails for elev. sorter	–	5#	$257	$314

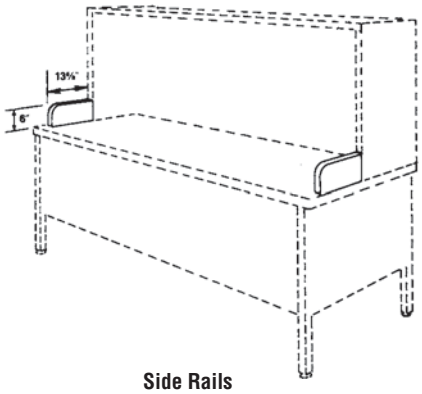

Side Rails

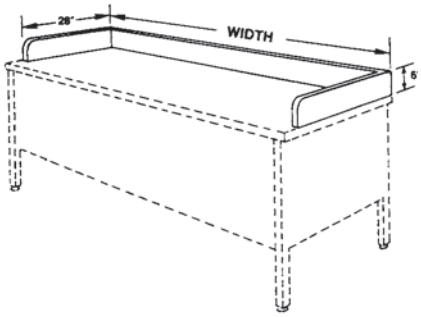

3-Sided Rails

Utility Drawer

To provide secured storage (lock standard) for meter heads, stamps, etc. Mounts to any table without doors. Field-installed.

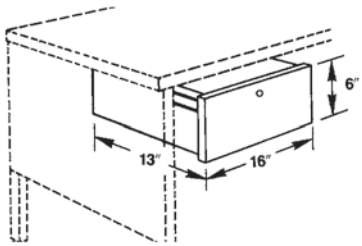

Model No.	Wt.	List Price
ADRW2K	18#	$481

Pencil Drawer

Store pencils, other small objects. Mounts to any table without doors; field installed. Black only.

Model No.	Width	Height	Depth	Wt.	List Price
1218	21"	1 3/4"	16"	7#	$135

Table Casters

Heavy-duty wheels with braking action; add mobility to any mail room table. Weight rating 500 lbs. per set of four. Field-installed.

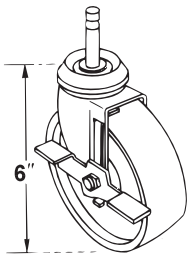

Model No.	Description	Wt.	List Price
ACASTK	Set of 4 Casters	6.5#	$355

MAILFLOW SYSTEMS®

SPECIALIZED MAILROOM WORKSTATIONS

Every mailroom or shipping area needs specialized workstations for supporting meter machines, printers and other equipment, as well as providing a place for supervisory personnel. Mayline offers a wide range of tables, accessory platforms, flipper door units, etc. which may be combined to accommodate a variety of specialized needs.

Meter Machine Workstation

The Meter Machine Workstation shown below combines several Mailflow Systems models to support a scale and meter machine in a typical configuration. See specifications for tables stating on page 301, sorters pages 290-295, accessory platforms page 304; then specify the meter machine workstation configuration that best suits your needs.

This Meter Machine Workstation, as shown at right, as an example, includes:

Model No.	Description	List Price Each
TW30	Work Table	$1127
SC2441EH	Elevated Sorter (17" elevation)	$1174
SS24LM01	Shelf Support	$47
1112P06	Shelf (2)	$136
TSA6030D	Storage Table with doors	$2555
AP3017	Accessory Platform	$655

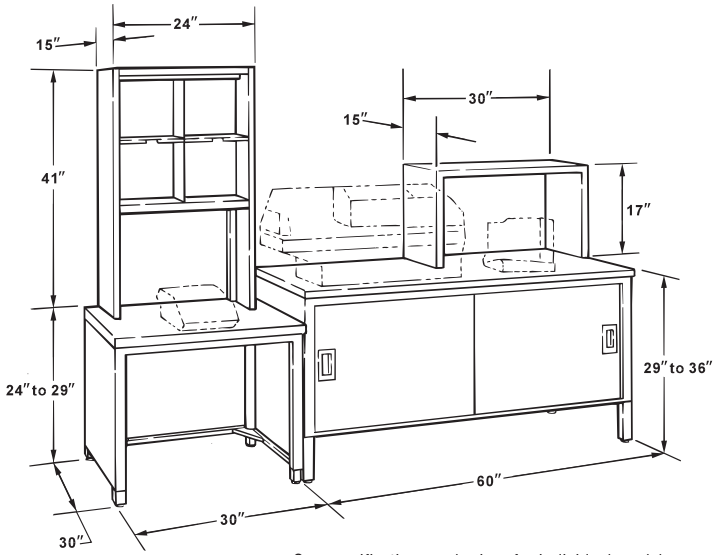

See specifications and prices for individual models.

SHIPPING WORKSTATIONS

Shipping Workstation

Modular, frame-based system for shipping environments.

- Preconfigured SW1 station will support a scale, PC, keyboard, label printer and report printer.
- All components adjust on frames in 1"H increments.
- No tools required for adjustment of components.
- **Standard finishes:** Mist or Sand paint w/ Birch low-pressure laminate work surface

Model No.	Description	List Price Each
3203060	Frame, 30"W x 60"H	$585
3202460	Frame, 24"W x 60"H	$570
350213R	Leg, single right	$284
350213L	Leg, single left	$284
350212	Foot, center support	$87
3403030	Worksurface, 30"W x 30"D	$552
3402430	Worksurface, 24"W x 30"D	$487
3303016	Horizontal mounting shelf (2)	$245
3302416	Horizontal mounting shelf	$203
350100	Wire keyboard holder, single	$141
SW1	SHIPPING WORKSTATION	$3683

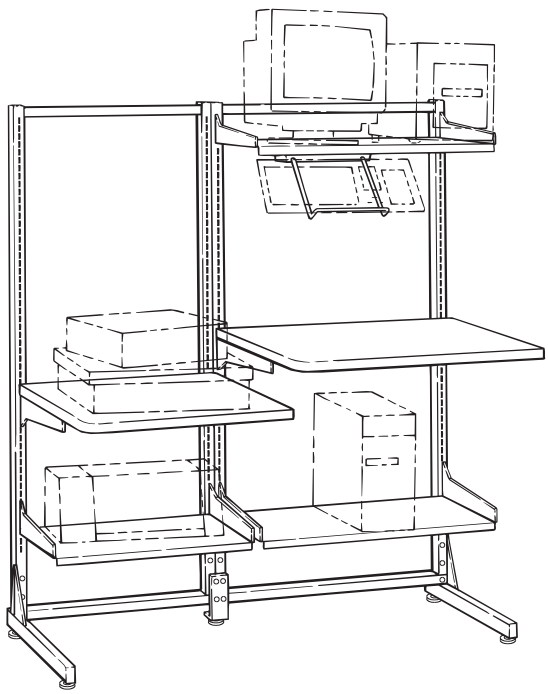

SW1 Shipping Workstation

MAILFLOW SYSTEMS®

BUILD-YOUR-OWN SHIPPING WORKSTATION

Build-your-own shipping system with individual frames, shelves, work surfaces and accessories.

- Frames are heavy-duty 11-gauge welded tubular steel.
- Frames are slotted on 1" vertical increments allowing components to connect without tools.
- Frames can be bolted together as your needs expand. 800 lbs. maximum load per frame.
- Shelves are 14-gauge steel with welded attachment brackets.
- Work surfaces are of 1" thick thermally-fused low-pressure laminate with medium density wood cores.
- **Standard finishes:** Mist or Sand paint w/ Birch low-pressure laminate work surface

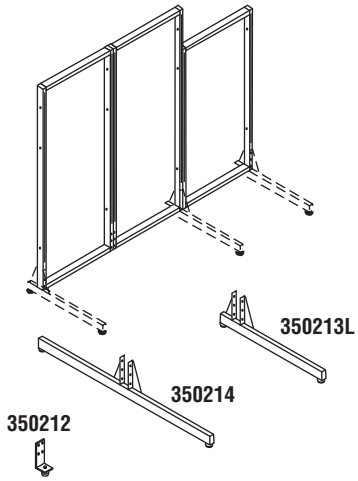

Model No.	Description	Wt.	List Price
	Steel Frames		
3202460	24"W x 60"H	36#	$570
3202472	24"W x 72"H	40#	$611
3202484	24"W x 84"H	44#	$671
3203060	30"W x 60"H	39#	$585
3203072	30"W x 72"H	43#	$623
3203084	30"W x 84"H	48#	$686
3203660	36"W x 60"H	40#	$606
3203672	36"W x 72"H	47#	$634
3203684	36"W x 84"H	48#	$696
	Leg Options		
350212	Foot, center support	2#	$87
350213R	Leg, single right	13#	$284
350213L	Leg, single left	13#	$284
350214	Leg, double-sided (universal)	11#	$353
350215	Casters for frame (pair; 1 locks)	4#	$144

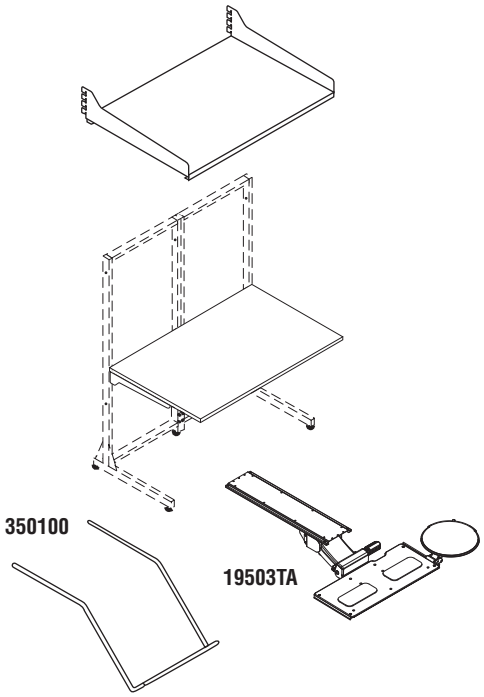

Model No.	Description	Wt.	List Price
Horizontal Mounting Shelf, steel (includes mounting brackets)			
3302416	Shelf, 24"W x 16"D	16#	$203
3303016	Shelf, 30"W x 16"D	19#	$245
3303616	Shelf, 36"W x 16"D	20#	$316
3304816	Shelf, 48"W x 16"D	27#	$458
3305416	Shelf, 54"W x 16"D	24#	$484
3306016	Shelf, 60"W x 16"D	32#	$513
Desk Worksurface (includes mounting brackets)			
3402430	Worksurface, 24"W x 30"D	24#	$487
3403030	Worksurface, 30"W x 30"D	30#	$552
3403630	Worksurface, 36"W x 30"D	34#	$611
3404830	Worksurface, 48"W x 30"D	45#	$730
3406030	Worksurface, 60"W x 30"D	56#	$952
3407230	Worksurface, 72"W x 30"D	78#	$1038
3409030	Worksurface, 90"W x 30"D	96#	$1315
350220	Adjustable front support leg	4#	$183
Keyboard Accessories			
350100	Wire keyboard holder, single unit	3#	$141
19503TA*	Combination keyboard/mouse platform 19"W x 8 1/4"D, 9"Dia. mouse platform Track is 16" long.	15#	$570

**Available in Black Only.*

TOTES (NOTE: Not on GSA)

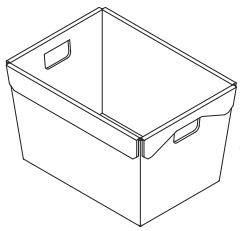

Totes

Totes of lightweight, high-density polyethylene with 3/8" dia. galvanized wire rod reinforcement at top. Available in packages of 3.

Model No.	Description	Width	Height	Depth	Wt.	List Price
❖ **90225**	Totes (3)	13 1/4"	11 1/2"	18 1/4"	8#	$172

❖ *Indicates Quick-Ship models.*

MAILFLOW-TO-GO™

The perfect solution for smaller organizations needing economical and functional mail center furniture, Mailflow-To-Go is affordable and easy to assemble.

- Rugged steel frame construction with 1" thick thermally-fused low-pressure laminate work surfaces.
- 500 lb. weight capacity.
- Ready to assemble.
- **Standard Finishes:** Pebble Gray paint with Birch low-pressure laminate work surfaces **only**.

Work Table

- Choice of either a 48"W or a 60"W rectangular table with attaching 30"W corner table.
- Corner table has two legs and must be installed adjacent to work table.
- Legs are 1 1/2" square, 16-gauge brushed chrome tubular steel.
- Tables adjust from 29" - 36"H on 1" increments.
- Work surfaces have 3mm PVC edge.
- 48"W and 60"W table has optional Shelf for under surface storage.
- SLF48 and SLF60 each have 75 lb. capacity.

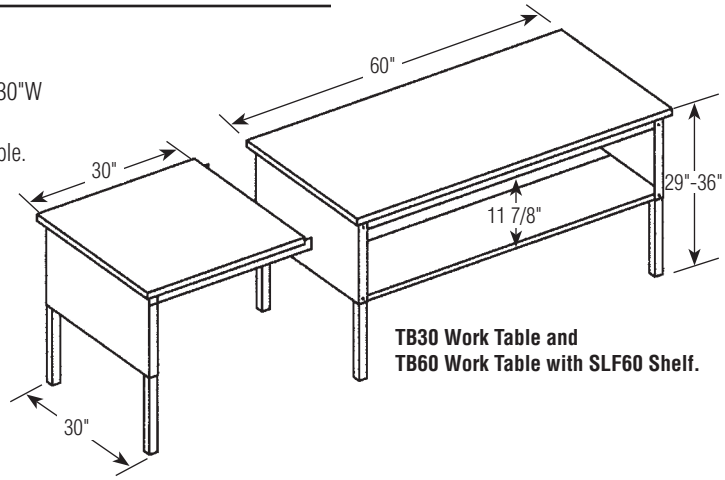

TB30 Work Table and TB60 Work Table with SLF60 Shelf.

Model No.	Description	Width	Height	Depth	Wt.	List Price
TB48	48"W Work Table	48"	29" - 36"	30"	90#	$771
SLF48	Shelf for 48"W Work Table	44"	1"	25 1/2"	20#	$181
TB60	60"W Work Table	60"	29" - 36"	30"	112#	$1020
SLF60	Shelf for 60"W Work Table	56"	1"	25 1/2"	25#	$193
TB30	30"W Work Table	30"	29" - 36"	30"	53#	$732
1219	Pencil Tray (Black Only)	21"	1 3/4"	16"		$135

Sorters

- Standard pocket dimension: 11 5/8"W x 2 5/8"H x 13 1/4"D. Shelves are fixed.
- Pockets sized to accommodate commonly used 10" x 13" flat envelopes.
- 48"W and 60"W sorters available in multiple heights, with or without elevated riser.
- 24"W sorter available in a two-tier with riser configuration only.
- Optional side dump rails, task light, and label holders.
- Durable steel construction, ready to assemble.

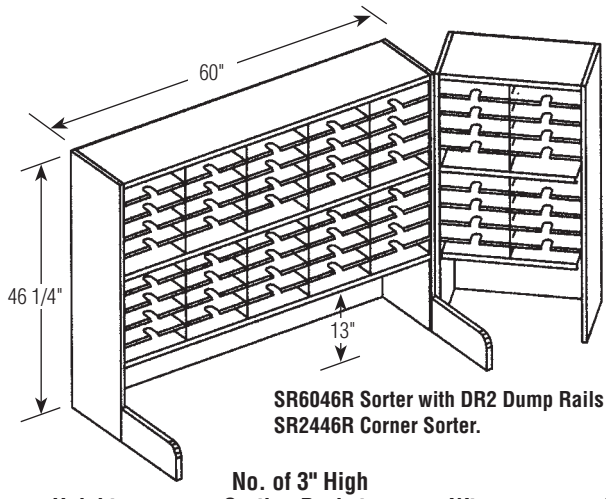

SR6046R Sorter with DR2 Dump Rails and SR2446R Corner Sorter.

Model No.	Description	Width	Depth	Height	No. of 3" High Sorting Pockets	Wt.	List Price
SR4833R	1-tier, riser	48"	13 1/4"	33 1/4"	20	91#	$888
SR4833	2-tier, no riser	48"	13 1/4"	33 1/4"	40	133#	$1114
SR4846R	2-tier, riser	48"	13 1/4"	46 1/4"	40	146#	$1378
SR6033R	1-tier, riser	60"	13 1/4"	33 1/4"	25	113#	$902
SR6033	2-tier, no riser	60"	13 1/4"	33 1/4"	50	166#	$1172
SR6046R	2-tier, riser	60"	13 1/4"	46 1/4"	50	182#	$1461
SR2446R	Corner sorter	24"	13 1/4"	46 1/4"	20	85#	$884
DR2	Dump rails	15"	3/4"	6"		5#	$124
4904K	48W task light (used for 60" sorters) – 48"W x 4"D x 2"H					10#	$288
3704K	36W task light (used for 48" sorters) – 36"W x 4"D x 2"H					8#	$233
90145	Label holders (set of 20) – Adhesive					1 oz.	$28
911785	Label holders (set of 20) – Magnetic					3 oz.	$45
922VEL	Label holders (set of 20) – Velcro					3 oz.	$53

Mailflow-To-Go Cabinets

These reconfigurable Mailflow-to-Go cabinets are a perfect addition to any mail or storage room. Their clever design uses one standard cabinet with any of three internal configurations creating a mail sort station, literature organizer or a standard shelving unit for bulk storage.

- Cabinet measures 42"W x 80"H x 16"D.
- Weight capacity 50 lbs. per shelf.
- Three unique configurations (Mail, Literature or Bulk Storage).
- Ships in 3 days or less.
- Easy to assemble, no hardware required.
- Available in Pebble Gray only.

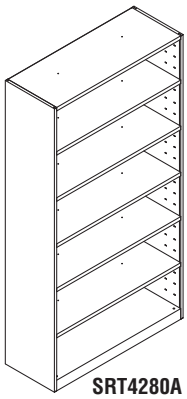

SRT4280A
(Bulk Storage)

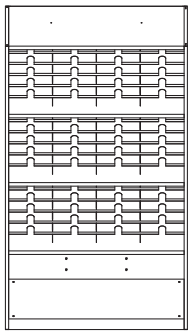

SRT4280B
(Literature/Form Storage)

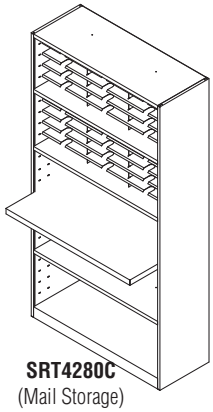

SRT4280C
(Mail Storage)
(Note: Reference Shelf 25"D)

Model No.	Configuration	Doors	No. of Shelves/Pockets	Pocket Dimensions	Wt.	List Price
SRT4280A	Bulk Storage	N	5 adjustable shelves		154#	$1433
SRT4280B	Literature/Forms	N	72 pockets	10 1/8"W x 12 3/4"D x 2 3/4"H	234#	$2266
SRT4280C	Mail	N	30 pockets	13 1/8"W x 12 3/4"D x 2 1/8"H	202#	$2051
SRTD4280A	Bulk Storage	Y	5 adjustable shelves		204#	$2029
SRTD4280B	Literature/Forms	Y	72 pockets	10 1/8"W x 12 3/4"D x 2 3/4"H	284#	$2745

VertiPocket Sorters

- All models measure 37 3/4"W x 12 3/4"D.
- Vertical pockets measure 4 7/8"W x 10 1/4"H x 12 1/2"D.
- Horizontal pockets in Combination Sorter measure 8 3/4"W x 2 1/4"H x 12 1/2"D.
- Steel frame with corrugated dividers and recycled paperboard back.
- Weight capacity of 5 lbs. per opening.
- Ready to assemble.

Standard Finishes: Pebble Gray **only**.

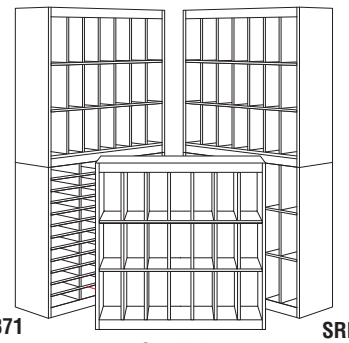

SRFC3871 **SRF3837** **SRF3871**

Model No.	Description	Height	No. of Pockets	Wt.	List Price
SRF3837	VertiPocket	37"	21 vertical	40#	$401
SRF3871	VertiPocket	71"	42 vertical	80#	$709
SRFC3871	Combination	71"	48 horizontal, 21 vertical	88#	$788

TECHNOLOGY FURNITURE

Techworks® Technology Furniture
Maytrix® Lan Racking System
e*Lan Computer Racking System
Height-Adjustable Media and Desk Center
S/E Cabinet
Eastwinds Computer Furniture
Machine Stands

TECHWORKS®

TECHWORKS TYPICALS

TechWorks technology furniture includes benches, organizer frames and accessories that can be configured in any number of ways to meet different tasks and keep pace with evolving technologies. From a single diagnostic station to team-oriented engineering spaces, TechWorks delivers exceptional durability and flexiblility along with smart technology features such as ESD worksurface options and integrated cable management.

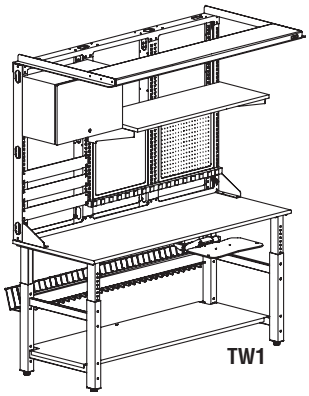

TW1

QTY.	DESCRIPTION	MODEL NO.	LIST PRICE EACH
1	72"W X 30"D Table w/Lam.	728H	$1643
1	72"W x 48"H Upper Frame	713	$878
1	48"W x 18"D Lam. Fixed Shelf	717H	$647
1	Retractable Keyboard/Mouse Platform	19503ATW	$570
1	Full Base Shelf 72"W x 23"D	723	$378
3	24"W x 3"H Part Bin Panels	758	$82
1	24"W Lockable Storage Bin	763	$771
1	48"W 15amp Power Strip	767	$320
1	72"W Task Light (48"H Frames)	793	$822
1	24"W x 24"H Pegboard	752	$232
1	72"W Wire Cable Basket	779	$415
1	24"W x 24"H Whiteboard	744	$232
TW1			**$7348**

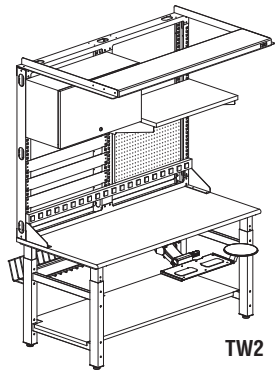

TW2

QTY.	DESCRIPTION	MODEL NO.	LIST PRICE EACH
1	60"W X 30"D Table w/Lam.	727H	$1533
1	60" X 48"H Upper Frame	710	$800
1	30"W X 18"D Lam. Fixed Shelf	798H	$606
1	Retractable Keyboard/Mouse Platform	19503ATW	$570
1	Full Base Shelf 60"W X 23"D	722	$336
3	30"W X 3"H Part Bin Panels	759	$98
1	30"W Lockable Storage Bin	764	$1009
1	60"W 15 amp Power Strip	768	$404
1	60"W Task Light	792	$835
1	30"W X 24"H Pegboard	755	$261
1	60"W Wire Cable Basket	778	$355
TW2			**$7039**

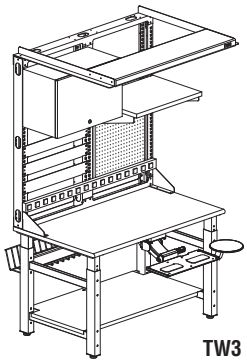

TW3

QTY.	DESCRIPTION	MODEL NO.	LIST PRICE EACH
1	48"W X 30"D Table w/Lam	700H	$1486
1	48"W X 48"H Upper Frame	707	$749
1	24"W X 18"D Lam. Fixed Shelf	797H	$586
1	Retractable Keyboard/Mouse Platform	19503ATW	$570
1	Full Base Shelf 48"W X 23"D	721	$298
3	24"W X 3"H Part Bin Panels	758	$82
1	24"W Lockable Storage Bin	763	$771
1	48"W 15 amp Power Strip	767	$320
1	48"W Task Light	791	$733
1	24"W X 24"H Pegboard	752	$232
1	48"W Wire Cable Basket	777	$282
TW3			**$6437**

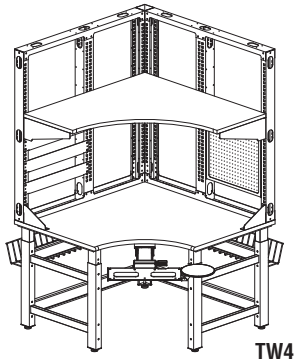

TW4

QTY.	DESCRIPTION	MODEL NO.	LIST PRICE EACH
1	48"W X 30"D Corner Table w/Lam.	729H	$1892
1	48" X 48"H Upper Corner Frame	716	$1258
1	24"W X 18"D Lam. Corner Shelf	720H	$1077
1	Retractable Keyboard/Mouse Platform	19503ATW	$570
3	24"W X 3"H Part Bin Panels	758	$82
1	24"W X 24"H Pegboard	752	$232
2	48"W Wire Cable Basket	777	$282
TW4			**$5944**

TECHWORKS TYPICALS

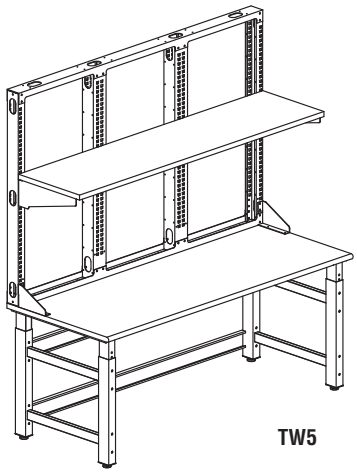

TW5

QTY.	DESCRIPTION	MODEL NO.	LIST PRICE EACH
1	72"W X 30"D Table w/Lam.	728H	$1643
1	72"W X 48"H Upper Frame	713	$878
1	72"W X 18"D Lam. Fixed Shelf	719H	$792
1	Partial Base Shelf 72"W X 12"D	740	$269
TW5			$3634

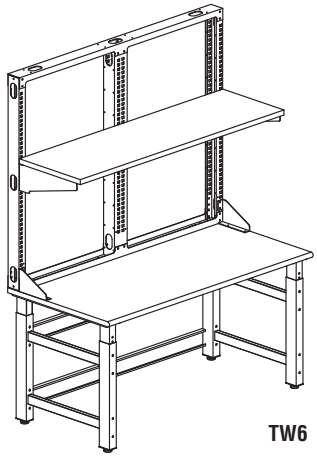

TW6

QTY.	DESCRIPTION	MODEL NO.	LIST PRICE EACH
1	60"W X 30"D Table w/Lam.	727H	$1533
1	60" X 48"H Upper Frame	710	$800
1	60"W X 18"D Lam. Fixed Shelf	718H	$720
1	Partial Base Shelf 60"W X 12"D	739	$238
TW6			$3338

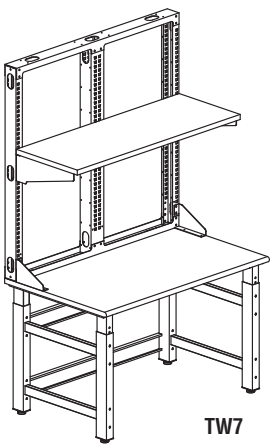

TW7

QTY.	DESCRIPTION	MODEL NO.	LIST PRICE EACH
1	48"W X 30"D Table w/Lam.	700H	$1486
1	48" X 48"H Upper Frame	707	$749
1	48"W X 18"D Lam. Fixed Shelf	717H	$647
1	Partial Base Shelf 48"W X 12"D	738	$194
TW7			$3119

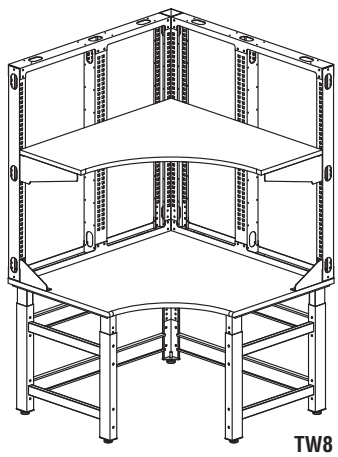

TW8

QTY.	DESCRIPTION	MODEL NO.	LIST PRICE EACH
1	48"W X 30"D Corner Table w/Lam.	729H	$1892
1	48" X 48"H Upper Corner Frame	716	$1258
1	24"W X 18"D Lam. Corner Shelf	720H	$1077
TW8			$3119

TECHWORKS®

BENCHES

- Available in 48", 60" and 72" widths, and 30" and 36" depths.
- Bullnose T-mold front edge with 3mm PVC on remaining sides. Black only.
- Tables are height adjustable from 26" to 38" (29" to 41" with caster kit).
- Table base accommodates a full or partial base shelf.
- Standard 3" cable management grommets on worksurface for ease of routing cables.
- 45 lb. density particle board with TFL (Thermally-Fused Laminate 1" thick), HPL (High Pressure Laminate 1 1/8" thick) or ESD (Electro-Static Discharge 1 1/8" thick), including grounding wire.
- Now available in 1 3/4" butcher block surface with bullnozed front edge.
- Supports 1000 lbs. and has welded support foot and leveler.
- Worksurfaces attach with metal-to-metal fasteners.
- Ships knocked down.
- **Standard paint finishes:** DW5 Graphite Textured, DV5 Black Textured
- Additional custom 24", 30", 36" widths and depths available call customer service for quotation.

Let Our Professional Design Staff Help You with TechWorks Space Planning and custom applications. Call or visit our web site at www.mayline.com

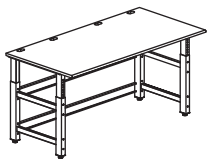
703

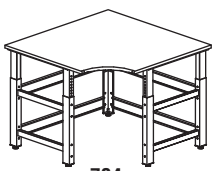
704

Model No.	Description	Wt.	List Price
700	48"W x 30"D Adjustable Table w/low pressure laminate surface	139#	$1346
700H	48"W x 30"D Adjustable Table w/high pressure laminate surface	139#	$1486
700E	48"W x 30"D Adjustable Table w/ ESD laminate	139#	$1817
700B	48"W x 30"D Adjustable Table w/ 1 3/4" butcher block surface	162#	$1706
701	48"W x 36"D Adjustable Table w/low pressure laminate surface	150#	$1440
701H	48"W x 36"D Adjustable Table w/high pressure laminate surface	150#	$1549
701E	48"W x 36"D Adjustable Table w/ESD laminate	150#	$1989
701B	48"W x 36"D Adjustable Table w/ 1 3/4" butcher block surface	183#	$1752
727	60"W x 30"D Adjustable Table w/low pressure laminate surface	155#	$1393
727H	60"W x 30"D Adjustable Table w/high pressure laminate surface	155#	$1533
727E	60"W x 30"D Adjustable Table w/ESD surface	155#	$2391
727B	60"W x 30"D Adjustable Table w/ 1 3/4" butcher block surface	187#	$2199
702	60"W x 36"D Adjustable Table w/low pressure laminate surface	170#	$1486
702H	60"W x 36"D Adjustable Table w/high pressure laminate surface	170#	$1598
702E	60"W x 36"D Adjustable Table w/ESD Surface	170#	$2424
702B	60"W x 36"D Adjustable Table w/ 1 3/4" butcher block surface	207#	$2224
728	72"W x 30"D Adjustable Table w/low pressure laminate surface	175#	$1501
728H	72"W x 30"D Adjustable Table w/high pressure laminate surface	175#	$1643
728E	72"W x 30"D Adjustable Table w/ESD surface	175#	$2412
728B	72"W x 30"D Adjustable Table w/ 1 3/4" butcher block surface	215#	$2247
703	72"W x 36"D Adjustable Table w/low pressure laminate surface	185#	$1598
703H	72"W x 36"D Adjustable Table w/high pressure laminate surface	185#	$1737
703E	72"W x 36"D Adjustable Table w/ESD surface	185#	$2440
703B	72"W x 36"D Adjustable Table w/ 1 3/4" butcher block surface	236#	$2270
729	48"W x 30"D Adjustable Corner Table w/low pressure laminate surface	180#	$1659
729H	48"W x 30"D Adjustable Corner Table w/high pressure laminate surface	180#	$1892
729E	48"W x 30"D Adjustable Corner Table w/ESD surface	180#	$2270
729B	48"W x 30"D Adjustable Corner Table w/ 1 3/4" butcher block surface	220#	$3443
704	48"W x 36"D Adjustable Corner Table w/low pressure laminate surface	185#	$1752
704H	48"W x 36"D Adjustable Corner Table w/high pressure laminate surface	185#	$1892
704E	48"W x 36"D Adjustable Corner Table w/ESD surface	185#	$2412
704B	48"W x 36"D Adjustable Corner Table w/ 1 3/4" butcher block surface	230#	$3538

TECHWORKS®

ESD ACCESSORIES

Quad Grounding Jack 788

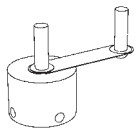

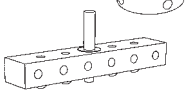

Grounding Bar 789

- Must be wired in compliance with local electrical codes
- Grounding bar provides common grounding point for managing multiple ground wires
- Wrist strap must be used with Grounding Jack for proper grounding
- Grounding Jack accommodates 4 standard banana jacks (on the end of wrist straps)

Model No.	Description	Wt.	List Price
787	ESD Wrist strap	2#	$83
788	ESD Grounding Jack	3#	$89
789	ESD Grounding Bar	.5#	$154

ORGANIZER FRAMES

- Attaches to top of Techworks Tables.
- Available in 24", 36" and 48" Heights; 48", 60", and 72" Widths; and 48" corner assemblies.
- Uprights are single slotted in 1" increments for maximum height adjustability of components.
- Organizer frames incorporate both horizontal and vertical integrated cable management options without requiring external cable channels.
- 14 gauge cold rolled steel construction, unit supports a maximum load rating of 400 lbs. (evenly balanced, cantilevered on one side).
- Mechanically fastened to worksurfaces.
- Ships knocked down.
- **Standard paint finishes:** DX5 Chameleon Textured, DU5 Autumn White Textured, DW5 Graphite Textured, DV5 Black Textured
- Additional custom sizes available.Call customer servive for quotation.

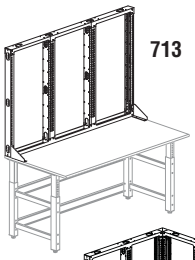

713

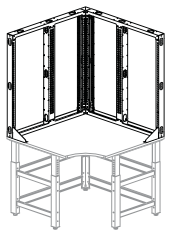

716

Model No.	Description	Wt.	List Price
705	48"W x 24"H Upper Frame	31#	$638
706	48"W x 36"H Upper Frame	35#	$689
707	48"W x 48"H Upper Frame	39#	$749
708	60"W x 24"H Upper Frame	42#	$703
709	60"W x 36"H Upper Frame	45#	$776
710	60"W x 48"H Upper Frame	51#	$800
711	72"W x 24"H Upper Frame	53#	$776
712	72"W x 36"H Upper Frame	59#	$847
713	72"W x 48"H Upper Frame	67#	$878
714*	48"W x 24"H Upper Corner Frame	65#	$1155
715*	48"W x 36"H Upper Corner Frame	72#	$1200
716*	48"W x 48"H Upper Corner Frame	80#	$1258

* Inner frame section of corner unit cannot accept pegboards or whiteboards.

SHELVES

- Widths - 24", 30", 48", 60" and 72", Depth - 18".
- Cantilevered shelves are height adjustable on one-inch increments and relocate without the use of tools for ease of adaptability.
- Tilt shelves have full-length raised safety edge to prevent forward slippage of stored equipment. Shelves are positioned at 0˚, 5˚ or 10˚ angles.
- Weight capacity of fixed and tilt shelf is 200 lbs. Corner shelf is 250 lbs.
- **Standard paint finishes:** DX5 Chameleon Textured, DU5 Autumn White Textured, DW5 Graphite Textured, DV5 Black Textured
- Additional custom depths available. Call customer servive for quotation.

Model No.	Description	Wt.	List Price
797	24"W x 18"D Low Pressure Laminate Fixed Shelf	29#	$516
797H	24"W x 18"D High Pressure Laminate Fixed Shelf	29#	$586
797E	24"W x 18"D ESD Fixed Shelf	29#	$657
797T	24"W x 18"D Low Pressure Laminate Tilt Shelf	32#	$616
797TH	24"W x 18"D High Pressure Laminate Tilt Shelf	32#	$687
797TE	24"W x 18"D ESD Tilt Shelf	32#	$759
798	30"W x 18"D Low Pressure Laminate Fixed Shelf	37#	$535
798H	30"W x 18"D High Pressure Laminate Fixed Shelf	37#	$606
798E	30"W x 18"D ESD Fixed Shelf	37#	$677
798T	30"W x 18"D Low Pressure Laminate Tilt Shelf	40#	$657
798TH	30"W x 18"D High Pressure Laminate Tilt Shelf	40#	$727
798TE	30"W x 18"D ESD Tilt Shelf	40#	$802
717	48"W x 18"D Low Pressure Laminate Fixed Shelf	45#	$576
717H	48"W x 18"D High Pressure Laminate Fixed Shelf	45#	$647
717E	48"W x 18"D ESD Fixed Shelf	45#	$753
717T	48"W x 18"D Low Pressure Laminate Tilt Shelf	47#	$720
717TH	48"W x 18"D High Pressure Laminate Tilt Shelf	47#	$792
717TE	48"W x 18"D ESD Tilt Shelf	47#	$906

Shelves continued on next page.

TECHWORKS®

SHELVES (CONTINUED)

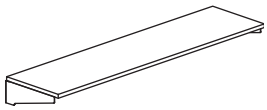

Linear Fixed Shelf
719

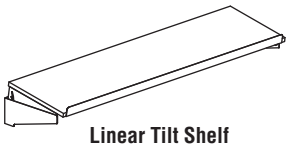

Linear Tilt Shelf
719T

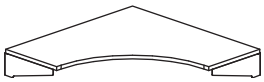

720

Model No.	Description	Wt.	List Price
718	60"W x 18"D Low Pressure Laminate Fixed Shelf	53#	$647
718H	60"W x 18"D High Pressure Laminate Fixed Shelf	55#	$720
718E	60"W x 18"D ESD Fixed Shelf	55#	$859
718T	60"W x 18"D Low Pressure Laminate Tilt Shelf	56#	$792
718TH	60"W x 18"D High Pressure Laminate Tilt Shelf	56#	$859
718TE	60"W x 18"D ESD Tilt Shelf	56#	$980
719	72"W x 18"D Low Pressure Laminate Fixed Shelf	63#	$720
719H	72"W x 18"D High Pressure Laminate Fixed Shelf	61#	$792
719E	72"W x 18"D ESD Fixed Shelf	61#	$906
719T	72"W x 18"D Low Pressure Laminate Tilt Shelf	66#	$859
719TH	72"W x 18"D High Pressure Laminate Tilt Shelf	66#	$933
719TE	72"W x 18"D ESD Tilt Shelf	66#	$1095
720	48"W x 18"D Low Pressure Laminate Corner Shelf	85#	$1006
720H	48"W x 18"D High Pressure Laminate Corner Shelf	85#	$1077
720E	48"W x 18"D ESD Corner Shelf	85#	$1209

KEYBOARD OPTIONS

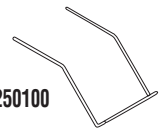

250100

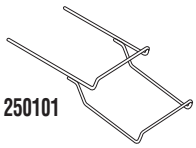

250101

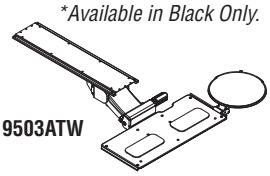

19503ATW

Model No.	Description	Wt.	List Price
19503ATW*	Combination keyboard/mouse platform 19"W x 8 1/4"D, 9"Dia. mouse platform	15#	$570
250100	Wire keyboard holder. Chrome finish.	3#	$124
250101	Dual wire keyboard holder. Chrome finish.	4#	$211

**Available in Black Only.*

SERVICE BARS

- Attached with wood screws to the underside of worksurfaces or shelves.
- Most include power strip.
- Includes four openings for air, gas, and vacuum fixtures.
- Includes two cable pass through holes.

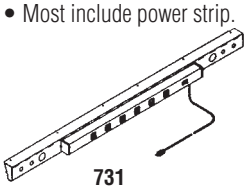

731

Model No.	Description	Wt.	List Price
730	Service Bar 48" 15amp power strip, 8 outlets, 15' cord	8#	$504
731	Service Bar 60" 15amp power strip, 12 outlets, 15' cord	12#	$562
732	Service Bar 72" 15amp power strip, 16 outlets, 15' cord	14#	$646
737	Service Bar Corner, no power strip	3#	$92

TELECOM CHANNEL

- Accepts up to 3 Data Telecom Plate Kits (see page 42)
- Two blank Telecome Plates included to cover unused openings.
- Attaches to organizer frame.

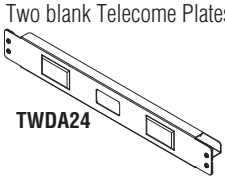

TWDA24

Model No.	Description	Wt.	List Price
TWDA24	24"W x 3"H Telecom Channel	4#	$150
TWDA30	30"W x 3"H Telecom Channel	4#	$160

TABLE BASE SHELVES

- Shelves attach to the lower or upper cross-bars on table base.
- Shelves are positional in 2 pre-set locations on base.
- 14 gauge CRS.
- Weight capacity of Full base or Partial base shelf is 400 lbs. each.

Full Shelf
721

Half Shelf
738

Model No.	Description	Wt.	List Price
721	Full base shelf 48"W x 23"D	33#	$298
722	Full base shelf 60"W x 23"D	39#	$336
723	Full base shelf 72"W x 23"D	47#	$378
738	Partial Base shelf 48"W x 12"D	16#	$194
739	Partial Base shelf 60"W x 12"D	19#	$238
740	Partial Base shelf 72"W x 12"D	22#	$269

TECHWORKS®

CASTER KITS

- Casters will add 3" of height to bench
- Kit includes (2) casters without locking mechanism and (2) locking casters which lock the wheel
- Tread is hard rubber
- Load capacity of each caster is 250 lbs.

Model No.	Description	Wt.	List Price
742	Caster Kit (5) for corner units	9#	$202
350221	Caster Kit (4)	7#	$163

WHITEBOARDS

- Attaches between frame uprights
- Creates a finished panel appearance from front.
- Allows hook-on components to be mounted in front of whiteboard.
- Cannot be used on middle sections of corner organizer frames.

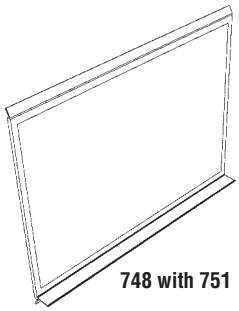

748 with 751

Model No.	Description	Wt.	List Price
744	24"W x 24"H whiteboard	6#	$232
745	24"W x 36"H whiteboard	7#	$285
746	24"W x 48"H whiteboard	8#	$345
747	30"W x 24"H whiteboard	7#	$261
748	30"W x 36"H whiteboard	8#	$305
749	30"W x 48"H whiteboard	9#	$357
750	24"W Marker Tray for whiteboards	1#	$65
751	30"W Marker Tray for whiteboards	1#	$71

PEG BOARDS

- Attaches between frame uprights
- Creates a finished panel appearance from front.
- Allows hook-on components to be mounted in front of peg board.
- Cannot be used on middle sections of corner organizer frames.

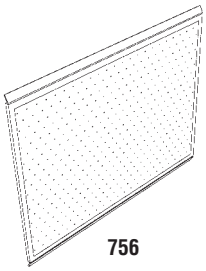

756

Model No.	Description	Wt.	List Price
752	24"W x 24"H peg board	6#	$232
753	24"W x 36"H peg board	7#	$285
754	24"W x 48"H peg board	8#	$331
755	30"W x 24"H peg board	7#	$261
756	30"W x 36"H peg board	8#	$305
757	30"W x 48"H peg board	9#	$340

PART BIN PANELS

- 48", 60", 72"W organizer frame sizes accept multiple bin strips.
- Accepts optional part bins from multiple vendors. (contact customer service for compatibility)
- Hook-on components cannot be placed in front of bin strips.

Bin Strip 758

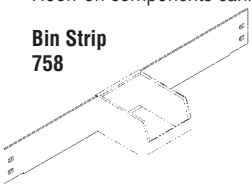

Model No.	Description	Wt.	List Price
758	24"W x 3"H Part Bin Panels	3#	$82
759	30"W x 3"H Part Bin Panels	4#	$98

TECHWORKS®

FREESTANDING STORAGE

- Full width with "J" style pulls.
- Locks standard.
- To key pedestals alike, purchase optional keyed alike tumblers.
- Full extension ball bearing slides on all drawers.
- Leveling glides have 5/8" of adjustability.
- Unique recessed base design allows casters to be added without adding additional height to the pedestal.

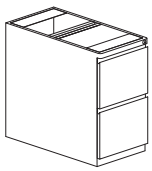

C8817F

Model No.	Dimensions	Wt.	List Price
C8817B	15"W x 17 1/2"D x 28"H - **B/B/F**	50#	$596
C8817F	15"W x 17 1/2"D x 28"H - **F/F**	48#	$596
C8817M	17"D - Mobile Kit	28#	$83

OVERHEAD STORAGE

- Door swings up and over the cabinet to optimize interior space.
- Door lock is standard.
- 12"D x 16"H
- Keyed Randomly.
- Non-Removable core.

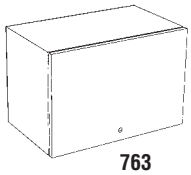

763

LOCKING STORAGE

Model No.	Description	Wt.	List Price
763	24"W x 12"D x 16"H lockable storage bin	37#	$771
764	30"W x 12"D x 16"H lockable storage bin	50#	$1009

POWER STRIPS

- Mounts horizontally to organizer frame, hardware included.
- 15' cord with NEMA L5-20P(20 amp).
- 6 front/6 rear NEMA5-15/20R outlets (20 amp).
- Lighted power switch with snap in guard.

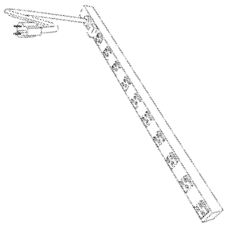

Model No.	Description	Wt.	List Price
765	24"W 15amp power strip, 8 outlets, 15' cord	3#	$295
767	48"W 15amp power strip, 16 outlets, 15' cord	4#	$320
768	60"W 15amp power strip, 20 outlets, 15' cord	5#	$404
769	72"W 15amp power strip, 24 outlets, 15' cord	6#	$421
76503	24"W 20amp power strip, 12 outlets, 15' cord	4#	$364
76504	30"W 20amp power strip, 12 outlets, 15' cord	4#	$364

Note: 48" wide power strips do not fit on corner organizer frames.

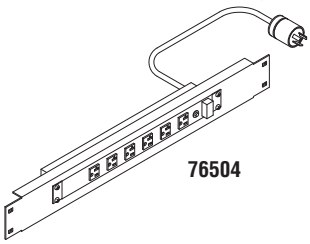

76504

LIGHTS

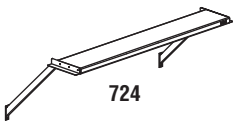

724

- Allow 15" of clearance above frame for height adjustable light
- Overhead lights include an on/off switch.
- Adjustable height overhead light may interfere with the placement of components at the uppermost mounting position.
- Overhead Lights include a 9 foot power cord
- UL and CSA approved

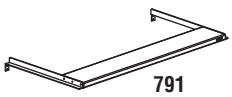

791

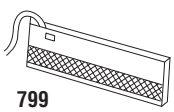

799

Model No.	Description	Wt.	List Price
724	48"W 4 bulb ballast adjustable height overhead light	36#	$766
725	60"W 4 bulb ballast adjustable height overhead light	41#	$835
726	72"W 4 bulb ballast adjustable height overhead light	47#	$859
791	48"W 4 bulb magnetic ballast fixed height overhead light	36#	$733
792	60"W 4 bulb magnetic ballast fixed height overhead light	41#	$835
793	72"W 4 bulb magnetic ballast fixed height overhead light	47#	$822
799	18"W x 4 1/2"D x 1 1/4"H under shelf task light	8#	$180

TECHWORKS®

CABLE MANAGEMENT

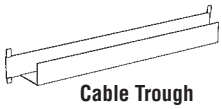

Cable Trough
775

Cable Trough (Mounts between frame uprights)

Model No.	Description	Wt.	List Price
775	24"W Horizontal Cable Management	2#	$76
776	30"W Horizontal Cable Management	2.5#	$82

Wire Basket
777

Cable Basket (Mounts to table base)

777	48"W Horizontal Cable Management, Black	4#	$282
778	60"W Horizontal Cable Management, Black	7#	$355
779	72"W Horizontal Cable Management, Black	8#	$415

Vertical Cable Organizer
782

Vertical Cable Organizer (Mounts to interior of frame uprights)

780	24"H section of Vertical Cable Management	2#	$129
781	36"H section of Vertical Cable Management	2.5#	$172
782	48"H section of Vertical Cable Management	3#	$232

RACK MOUNT ADAPTERS

- Provides 19" EIA standard rack mounting between uprights.
- Standard with cage nuts for mounting equipment.

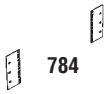

784

Model No.	Description	Wt.	List Price
783	3 1/2" rack rail adapter set (2U) 24" spacing	2#	$129
784	7" rack rail adapter set (4U) 24" spacing	3#	$232
785	3 1/2" rack rail adapter set (2U) 30" spacing for 60"W frames	2#	$154
786	7" rack rail adapter set (4U) 30" spacing for 60"W frames	3#	$251

CONNECTOR KITS (to connect side-by-side stations together)

Model No.	Description	Wt.	List Price
790	Connector kits	1#	$91

FLAT PANEL MONITOR SUPPORT BRACKET

- Compatible with VESA compliant monitors only.
- 25 lb. capacity.

FPD2TW

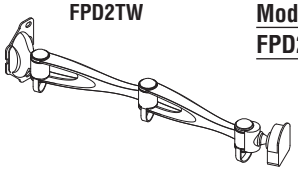

Model No.	Description	Wt.	List Price
FPD2TW	Monitor Support – Two Arms	4#	$183

MAYTRIX®

MAYTRIX LAN RACKING SYSTEM

Modular, flexible, yet rugged support system for organizing local area network, communications and monitoring equipment.

- **Frames:** Heavy-duty 1" x 2" 11-gauge welded steel, slotted on both sides in 1" increments. Frames can be bolted together as needs expand. 800 lb. maximum load per frame. **Note:** Frame heights are for frame only. Must add 3" for foot and 6" for caster and foot.
- **Shelves:** 14-gauge steel with integral attachment brackets. Available either horizontal or with 13° tilt. Floor shelf for CPU requires either glide or caster kit. 300 lb. maximum load per shelf.
- **Work Surface:** 1" thermally-fused Fog Gray low-pressure laminate with T-mold edge standard. Also available in 1 1/8" high-pressure laminate or ESD laminate with T-mold edge (does not include grounding wire). Support brackets included. Additional front support leg suggested for loads over 150#. Support leg included with 36"-deep work surfaces.
- **Keyboard supports:** Available in four variations — single wire holder or double wire holder for mounting under steel shelves; retractable platform or keyboard drawer for mounting under work surface.

PRECONFIGURED MATRIX LAN STATION: TYPICALS

Mayline offers three preconfigured Maytrix LAN stations to meet a variety of systems needs. **Each ships in a single carton.**

Color: Gray paint finish, with Fog Gray low-pressure laminate surfaces only for preconfigured units.

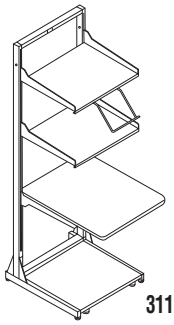
31124

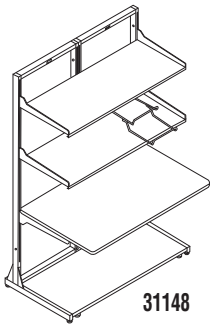
31148

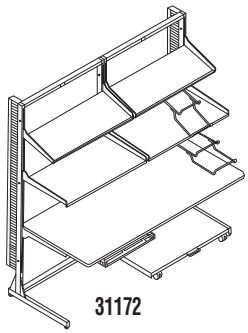
31172

Model No.	Description	Wt.	List Price
31124	**24" Basic Maytrix**	119#	$2352
	(1) 24" x 72" frame; (2) single-sided legs; (2) 24" x 16" horiz. shelves; (1) single wire keyboard holder; (1) 24" x 30" work surface; (1) 18" x 21" floor shelf; (1) floor shelf glide kit.		
31148	**48" Maytrix Console**	211#	$3987
	(2) 24" x 72" frames; (2) single-sided legs; (1) center support foot; (2) 48" x 16" horiz. shelves; (1) double wire keyboard holder; (1) 48" x 30" work surface; (1) 42" x 21" floor shelf; (1) floor shelf glide kit.		
31172	**72" Deluxe Maytrix**	270#	$5897
	(2) 36" x 72" frames; (2) single-sided legs; (1) center support foot; (2) 36" x 16" tilt shelves; (2) 36" x 16" horiz. shelves; (2) double wire keyboard holders; (1) 72" x 30" work surface; (1) under surface keyboard drawer; (1) 30" x 21" floor shelf; (1) floor shelf caster kit; (2) 6 ft. slotted cable management channels.		

MAYTRIX LAN RACKING SYSTEM

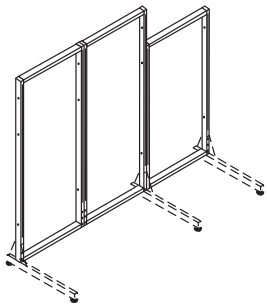

Model No.	Description	Wt.	List Price
Maytrix Steel Frames			
3202460	Frame, 24"W x 60"H	36#	$570
3202472	Frame, 24"W x 72"H	40#	$611
3202484	Frame, 24"W x 84"H	44#	$671
3203060	Frame, 30"W x 60"H	39#	$585
3203072	Frame, 30"W x 72"H	43#	$623
3203084	Frame, 30"W x 84"H	48#	$686
3203660	Frame, 36"W x 60"H	40#	$606
3203672	Frame, 36"W x 72"H	47#	$634
3203684	Frame, 36"W x 84"H	48#	$696

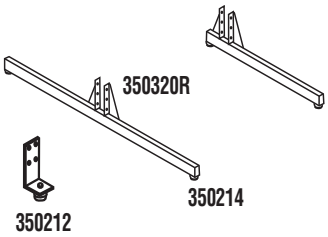

Model No.	Description	Wt.	List Price
Maytrix Leg Options			
350212	Foot, center support	2#	$87
350213R	Leg, single right (for use with 30"-deep work surfaces)	7#	$284
350213L	Leg, single left (for use with 30"-deep work surfaces)	7#	$284
350320R	Leg, single right (for use with 36"D work surfaces)	7#	$284
350320L	Leg, single left (for use with 36"D work surfaces)	7#	$284
350214	Leg, double-sided (universal - fits L or R)	11#	$353
350215	Casters for frame (pair-1 lock, 1 non-lock)	4#	$144
350325R	Frame brace, right	4#	$140
350325L	Frame brace, left	4#	$140

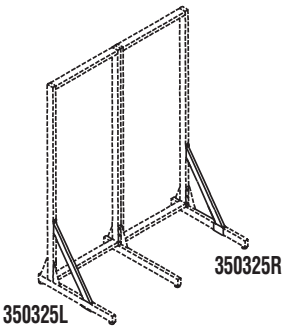

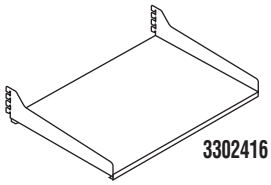

Model No.	Description	Wt.	List Price	Model No.	Description	Wt.	List Price
Maytrix Horizontal Mounting Shelf, steel (includes mounting brackets)							
3302416	24"W x 16"D	16#	$203	**3302420**	24"W x 20"D	16#	$219
3303016	30"W x 16"D	19#	$245	**3303020**	30"W x 20"D	16#	$273
3303616	36"W x 16"D	20#	$316	**3303620**	36"W x 20"D	24#	$332
3304816	48"W x 16"D	27#	$458	**3304820**	48"W x 20"D	27#	$475
3305416	54"W x 16"D	27#	$484	**3305420**	54"W x 20"D	27#	$505
3306016	60"W x 16"D	32#	$513	**3306020**	60"W x 20"D	38#	$540
350318	Replacement center mounting bracket (48", 60" only)						$98

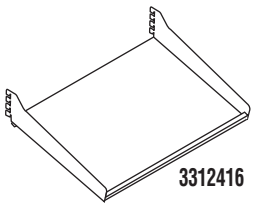

Maytrix 13˚ Tilt Shelf, steel (includes mounting brackets)							
3312416	24"W x 16"D	16#	$305	**3312420**	24"W x 20"D	19#	$318
3313016	30"W x 16"D	19#	$358	**3313020**	30"W x 20"D	19#	$373
3313616	36"W x 16"D	21#	$403	**3313620**	36"W x 20"D	19#	$419

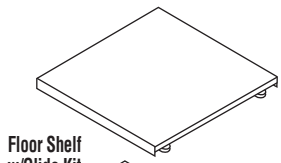

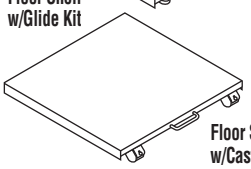

Maytrix Floor Shelf, steel		Wt.	List Price
3322421	Floor shelf, 18"W x 21"D, fits 24"W frame	14#	$343
3323021	Floor shelf, 24"W x 21"D, fits 30"W frame	16#	$358
3323621	Floor shelf, 30"W x 21"D, fits 36"W frame	19#	$365
3324821	Floor shelf, 42"W x 21"D, fits 48"W frame	26#	$391
3326021	Floor shelf, 54"W x 21"D, fits 60"W frame	30#	$421
350218	Floor shelf caster kit (2 lock, 2 non-lock) + handle	2#	$47
350216	Floor shelf glide kit (set of 4)	1#	$54

MAYTRIX LAN RACKING SYSTEM

Maytrix Desk Work Surface (includes mounting brackets) (36"D surfaces include adjustable front support legs)

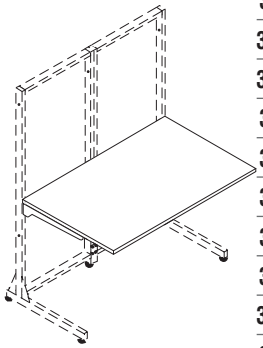

TFL Model No.	Description	Wt.	TFL Laminate List Price	HPL Laminate List Price	ESD Laminate List Price
				"L" Suffix	"LE" Suffix
3402430	Work surface, 24"W x 30"D	24#	$487	$634	$900
3403030	Work surface, 30"W x 30"D	30#	$552	$722	$993
3403630	Work surface, 36"W x 30"D	34#	$611	$792	$1072
3404830	Work surface, 48"W x 30"D	45#	$730	$965	$1260
3405430	Work surface, 54"W x 30"D	45#	$835	$1090	$1435
3406030	Work surface, 60"W x 30"D	56#	$952	$1210	$1531
3407230	Work surface, 72"W x 30"D	78#	$1038	$1315	$1650
3409030	Work surface, 90"W x 30"D	96#	$1315	$1691	$2062
3402436	Work surface, 24"W x 36"D	29#	$658	$749	$983
3403036	Work surface, 30"W x 36"D	33#	$703	$961	$1072
3403636	Work surface, 36"W x 36"D	42#	$781	$933	$1231
3404836	Work surface, 48"W x 36"D	64#	$875	$1133	$1500
3405436	Work surface, 54"W x 36"D	66#	$1092	$1279	$1686
3406036	Work surface, 60"W x 36"D	67#	$1094	$1422	$1876
3407236	Work surface, 72"W x 36"D	75#	$1237	$1551	$1876
3409036	Work surface, 90"W x 36"D	90#	$1530	$1987	$2627

Note: TFL = Low Pressure Laminate as standard.

MATRIX PENINSULA

- Includes mounting brackets.

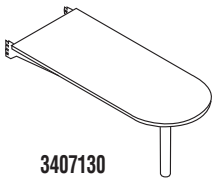

3407130

TFL Model NO.	Description	Wt.	TFL Laminate List Price	HPL Laminate List Price	ESD Laminate List Price
				"L" Suffix	"LE" Suffix
Maytrix Peninsula (includes mounting brackets - hooks onto Maytrix™ frame)					
3407130	71"L x 30"W w/T-mold edge	83#	$1045	$1334	$1515

Note: Post-formed edge not available on peninsula surface. Surface height must be set nominally at 29".

Matrix 90˚ Corner Work Surfaces

Model No.	Description	Wt.	List Price
Maytrix Corner Components - Shelves			
3332416	90° Steel corner shelf, 24"W x 16"D (requires two 24" frames)	20#	$321
3332420	90° Steel corner shelf, 24"W x 20"D (requires two 24" frames)	22#	$328
3333016	90° Steel corner shelf, 30"W x 16"D (requires two 30" frames)	22#	$332
3333616	90° Steel corner shelf, 36"W x 16"D (requires two 36" frames)	25#	$346
3333020	90° Steel corner shelf, 30"W x 20"D (requires two 30" frames)	25#	$346
3333620	90° Steel corner shelf, 36"W x 20"D (requires two 36" frames)	28#	$357

MAYTRIX LAN RACKING SYSTEM

Matrix 90˚ Corner Work Surfaces

TFL Model No.	Description	TFL Laminate List Price	HPL Laminate List Price	ESD Laminate List Price
			"L" Suffix	"LE" Suffix
3403030	30"W x 30"D (requires two 30" frames; 350213L/350213R legs recommended)	$552	$722	$993
3403636	36"W x 36"D (requires two 36" frames; 350213L/350213R legs recommended)	$781	$933	$1231
3434830	48"W x 30"D (requires four 24" frames)	$1066	$1295	$1515
3434836	48"W x 36"D (requires four 24" frames)	$487	$1416	$1609
350217	Corner connector kit (foot and hardware required for 90˚ corner configuration)	$143	$143	$143

HOW TO SPECIFY

Start with base model number for work surfaces or peninsula and ***SELECT ONE CODE FROM EACH OF THE OPTIONS*** to complete your final model number for ordering:

Select MODEL NUMBER (ie., 3403030)	Option 1 Thermally Fused Laminate No suffix	Option 2 High Pressure Laminate L = HPL Laminate	Option 3 ESD Laminate LE = ESD Laminate

The final Model number for a surface with the base model number of 3403030 with the highlighted ESD Laminate option would be 3403030LE.

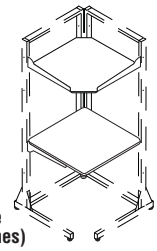

90˚ Corner Shelf and Work Surface (for 30" and 36" frames)

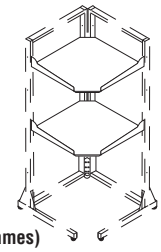

90˚ Corner Shelves (for 30" and 36" frames)

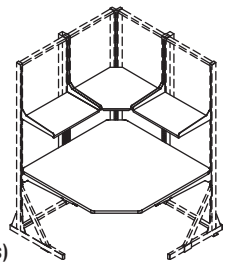

90˚ Corner Shelf and 48" Work Surface (Also shown 2-3302416 shelves and required 24" frames)

STORAGE BINS

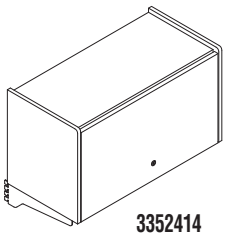

3352414

TFL Model No.	Description	Wt.	TFL Laminate List Price	HPL Laminate List Price
				"L" Suffix
3352414	24"W Storage bin (internal dimensions: 13"H x 21 3/4"W x 13 1/4"D)	40#	$990	$1047
3353014	30"W Storage bin (internal dimensions: 13"H x 27 3/4"W x 13 1/4"D)	45#	$1006	$1065
3353614	36"W Storage bin (internal dimensions: 13"H x 33 3/4"W x 13 1/4"D)	51#	$1036	$1109

ESD ACCESSORIES

Quad Grounding Jack 788

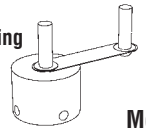

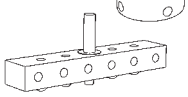

Grounding Bar 789

- Must be wired in compliance with local electrical codes
- Grounding bar provides common grounding point for managing multiple ground wires
- Wrist strap must be used with Grounding Jack for proper grounding
- Grounding Jack accommodates 4 standard banana jacks (on the end of wrist straps)

Model No.	Description	Wt.	List Price
787	ESD Wrist strap	2#	$83
788	ESD Grounding Jack	3#	$89
789	ESD Grounding Bar	.5#	$154

MAYTRIX LAN RACKING SYSTEM

ACCESSORIES

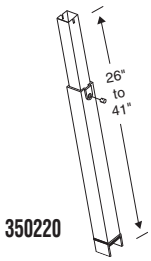

350220

Description	Wt.	Model No.	List Price
Adjustable front support leg - all work surfaces	4#	**350220**	$183
Replacement top bracket (right) - 30"D and 36"D work surfaces	4#	**350321R**	$98
Replacement top bracket (left) - 30"D and 36"D work surfaces	4#	**350321L**	$98
Replacement top bracket (right) - all 24"D work surfaces	4#	**350327R**	$97
Replacement top bracket (left) - all 24"D work surfaces	4#	**350327L**	$97

Note: Adjustable front support leg recommended for all corner and 36" deep work surfaces.

Maytrix Power Accessories

Model No.	Description	Wt.	List Price
350181	72"L, 24 outlet power strip, 15 amp, 15' cord	4.5#	$359
350173	Power strip, 4 ft. (10 outlets) with surge suppressor, 15 amp - 450 joules	5#	$401
A7737	Hardware bags for mounting		$12

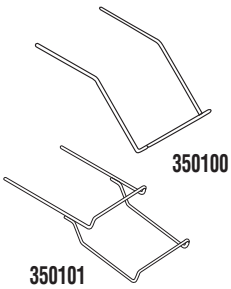
350100
350101

Model No.	Description	Wt.	List Price
Maytrix Keyboard Accessories			
350100	Wire keyboard holder, single unit. Fits 16"D shelf. Chrome.	3#	$141
350118	Wire keyboard holder, single unit. Fits 20"D shelf. Chrome.	3#	$132
350101	Wire keyboard holder, dual unit. Fits 16"D shelf. Chrome.	4#	$243
350119	Wire keyboard holder, dual unit. Fits 20"D shelf. Chrome.	4#	$230
19503TA*	Combination keyboard/mouse platform 19"W x 8 1/4"D, 9"Dia. mouse platform	15#	$570

**Available in Black Only.*

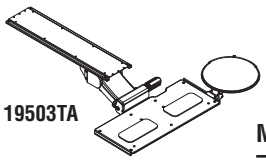
19503TA

Maytrix Cable Management System

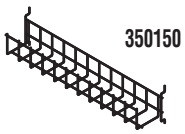
350150

350142	2"W x 2"D channel (slotted), 6 ft. - black only	3#	$193
350117	Pop rivets - pkg. of 25 (to attach cable channels)	1#	$18
350150	24"W Wire Cable Trough	1#	$135
350151	30"W Wire Cable Trough	2#	$175
350152	36"W Wire Cable Trough	2.5#	$233

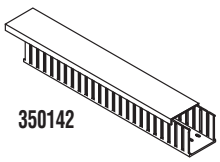
350142

FLAT PANEL MONITOR SUPPORT BRACKET

- Compatible with VESA compliant monitors only.
- 25 lb. capacity.

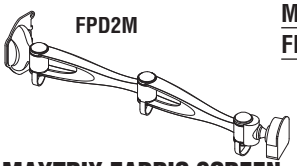

Model No.	Description	Wt.	List Price
FPD2M	Monitor Support – Two Arms	4#	$183

MAYTRIX FABRIC SCREEN

- Installs between Maytrix steel frame sections to create a private work environment.

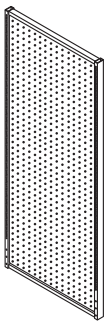

Model No.	Dimensions	Wt.	List Price
350440	24"W x 72"H x 1 1/4"D	58#	$971
350445	30"W x 72"H x 1 1/4"D	75#	$1237
350450	36"W x 72"H x 1 1/4"D	92#	$1302
350460	24"W x 60"H x 1 1/4"D	48#	$878
350465	30"W x 60"H x 1 1/4"D	62#	$1144
350470	36"W x 60"H x 1 1/4"D	76#	$1206
350480	24"W x 84"H x 1 1/4"D	68#	$1095
350485	30"W x 84"H x 1 1/4"D	88#	$1362
350490	36"W x 84"H x 1 1/4"D	107#	$1424

HOW TO ORDER MAYTRIX FABRIC SCREENS

FABRIC SCREEN OPTIONS

When ordering fabric screens, use the code at right to indicate your fabric option:

3 5 0 4 4 0 S T Y

Product Code | Fabric Option

Corporate Fabric

Fabric Color	Order Code
Spinel	
Tiger Eye	STY
Sand Stone	SSS
Guilden	SGL
Lido	
Balboa	LBB
Heartland	LHL
Bryce Canyon	LBC
Mingle	
Crystal	MCT
Khaki	MHK
Biscuit	MBT
Cross Town	
Buff	CBF
Ray	CRA
Fieldstone	CFS
Anchorage	
Goose	AGS
Bailey	
Khaki	BKH
Hopscotch	
Fieldstone	HFS

e*LAN

e*LAN COMPUTER RACKING STATIONS

Affordable racking stations for organizing networking hardware and equipment.
Framework: 1" x 2" x 72"H, 14-gauge steel. Frames allow for shelf adjustment in 2" increments. Tested to 600 lbs. per 24"/36" frame without failure.
Shelves: Thermally-fused laminate (TFL) over 3/4"-thick particle board core. Shelves tested to 250 lbs. without failure.
Work surfaces: Thermally-fused laminate (TFL) over 1" thick particle board core. Post-formed tops not available.
Color: Graphite paint finish with Ice Gray TFL surfaces only.

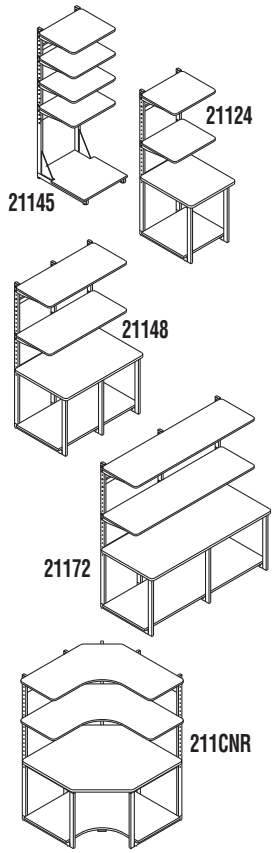

Note: EACH STATION SHIPS IN ONE CARTON.

Model No.	Description	Wt.	List Price
21145	**24" Server Station** 24"W framework; (4) 24 1/4"W x 20"D shelves; and (1) 24 1/4"W x 29 1/2"D server shelf.	108#	$935
21124	**24" LAN Station** 24"W framework; (2) 24 1/4"W x 20"D shelves; (1) 25"W x 30"D work surface; and (1) 24 1/4"W x 24 3/4"D server shelf.	111#	$1258
21148	**48" LAN Station** 48"W framework; (2) 48"W x 20"D shelves; (1) 48"W x 30"D work surface; and (1) 47"W x 24 3/4"D server shelf.	200#	$2161
21172	**72" LAN Station** 72"W framework; (2) 72"W x 20"D shelves; (1) 72"W x 30"D work surface; and (1) 71"W x 24 3/4"D server shelf.	253#	$2696
211CNR	**48" Corner Station** 48"W corner framework; (2) 48"W x 20"D corner shelves; (1) 48"W x 30"D corner work surface; and (1) 46"W x 25 1/8"D corner server shelf.	298#	$2851

Model No.	Description	Wt.	List Price
e*LAN Accessories			
Additional Shelving			
2202418	24"W x 20"D shelf	15#	$177
2204818	48"W x 20"D shelf	28#	$264
2207218	72"W x 20"D shelf	38#	$294
Keyboard Supports			
19503TA*	Combination keyboard/mouse platform 19"W x 8 1/4"D, 9"Dia. mouse platform	15#	$570
250100	Wire keyboard holder. Chrome finish. 18"W x 9"D x 7"H	3#	$124
250101	Dual wire keyboard holder. Chrome finish. 18"W x 9"D x 10"H	4#	$211

** Available in black only.*

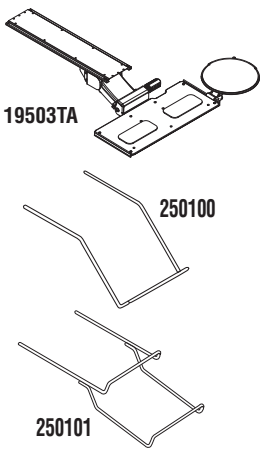

Cable Management			
350142	2" x 2" cable manager, 6 ft. — black only.	3#	$193
Caster Kits			
21100	Caster kit for 24"W stations (2 7/8" casters)	4#	$112
21101	Caster kit for 48"W and 72"W stations (2 7/8" casters)	5#	$163
21103	Caster kit for corner unit (2 7/8" casters)	6#	$215
Power Strips			
21104	24"W power strip, 8 outlet, 15 amp, 15 ft. cord	4#	$235
21105	48"W power strip, 16 outlet, 15 amp, 15 ft. cord	5#	$265
21106	72"W power strip, 24 outlet, 15 amp, 15 ft. cord	6#	$336
21107	e*LAN connector kit for ganging LAN and corner stations (will not work on 21145 Server Station)	2#	$97

HEIGHT ADJUSTABLE MEDIA/DESIGN CENTER

New height adjustable media/design center available in vertical and tilt versions.

- Easy to manuever the mobile media center is ready for meeting requirements anywhere four wheels will allow.
- Design center version allows for seated or standing height work on a large screen from vertical to horizontal position.
- Available in all Mayline corporate paint colors (mounting screws in black only)
- Electrical System: 110Vm 60 Hz, 24V DC mtor. Draws 1.2 amps under full load.
- Meets ANSI/BIFMA tested requirements.

MAYLINE HA MOBILE VERTICAL MEDIA CENTER

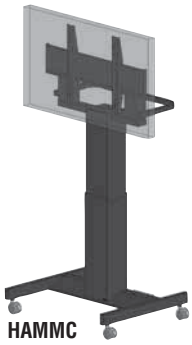

HAMMC

Model No.	Description	Base Dimensions	List Price
HAMMC	Std. w/ 4 locking casters/handle Vertical screen position only Max. weight load 150 lbs. 18" travel Starting Hgt/ Vertical Orientation 46" ** Full Height/Vertical Orientation 64" ** Screen Mounting Pattern Accomodated 400 x 400; 600 x 400 5 Outlet Powerstrip mounted to base Cable Management Bracket	35"W x 29.56" D x 7" H	$5395

MAYLINE HA TILT DESIGN / MEDIA CENTER*

Model No.	Description	Base Dimensions	List Price
HADC	Optional Caster Kit available Vertical to Horizontal Electric Tilt option standard Max. weight load 150 lbs. 18" travel Starting Hgt/ Vertical Orientation 32.5"** Full Height/Vertical Orientation 50.5"** Starting Hgt/ Horizontal Orientation 33.5"*** Full Height/Horizontal Orientation 51.5"*** Screen Mounting Pattern Accomodated 400 x 400; 600 x 400 5 Outlet Powerstrip mounted to base Cable Management Bracket	35"W x 29.56" D x 4" H	$6495

ACCESORIES

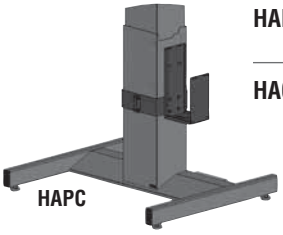

HAPC

Model No.		Wt.	List Price
HAPC	PC Holder Bracket and expandable PC holder Expands from 3" to 7 1/2"	25#	$325
HACK	Caster Kit"4 - 3" locking casters Gray soft tread thermoplastic twin wheel heavy duty casters Load Rated 175 lbs. per caster Total locking - rotation and swivel lock - for greater stability		$150

* Recommend use of commercial grade screens for tilt version to avoid overheating when screen is in horizontal position.

** Approximate dimensions measured to the center of the screen. This can vary depending on location of screen VESA pattern in relation to the screen.

*** Dimension does not include screen thickness.

*** Brackets may show if screen is smaller than 40"; varies with VESA pattern location.

S/E CABINET

- The S/E Cabinet comes fully assembled, just add shelves at the spacings desired.
- 3 shelves included (standard on DSP models) and adjust on 1" increments.
- Optional single shelf kit available to add additional shelves to cabinet.
- Empty cabinet version available (no shelves).
- Perforated locking doors with 4 hinges each.
- 30"D cabinet with steel back panel and two 3" dia. pop-outs.
- All-welded steel construction.
- Features adjustable leveling guides.
- **Available in Black, Graphite and Desert Sage.**
- Tamper-proof hinges inside cabinet, not accessible from outside.
- Hinge will hold doors open or keep closed without engaging the lock.
- Great for storing electrical equipment due to the ventilated design and pop-outs at rear of cabinet for power purposes.

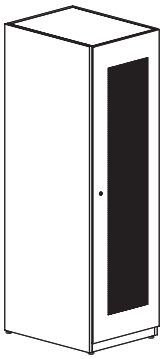

2480DSE

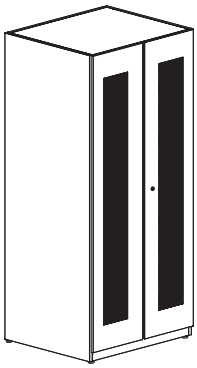

3680DSE

Model No.	Description	Dimensions	Wt.	List Price
3680DSP	36"W, Double-Door Cabinet, includes 3 Shelves	36"W x 31"D x 80"H	307#	$5500
2480DSP	24"W, Single-Door Cabinet, includes 3 Shelves	24"W x 31"D x 80"H	279#	$4265
3680DSE	36"W, Double-Door Cabinet, empty	36"W x 31"D x 80"H	260#	$4996
2480DSE	24"W, Single-Door Cabinet, empty	24"W x 31"D x 80"H	240#	$3801
36801S	36"W, Single Shelf Kit for 36"W Cabinet	34"W x 28 3/4"D x 1"H	17#	$255
24801S	24"W, Single Shelf Kit for 24"W Cabinet	22"W x 28 3/4"D x 1"H	14#	$215

EASTWINDS COMPUTER FURNITURE

FAST Freight QUICK-SHIP

EASTWINDS COMPUTER FURNITURE

Eastwinds computer furniture is designed for the technology-driven office and adaptable to a variety of environments.
Framework: Metallic Gray, powder-coated steel frames.
Surfaces: Vacuum-formed thermofoil in Anthracite (ANT) or Medium Cherry (MEC).
All models ship UPS except: 900, 905, 915, 8000DU.

- All models in all finishes are available on both the Quick-Ship and Fast Freight delivery programs with no quantity limitations.

ESPRESSO PC DESK WITH FILE

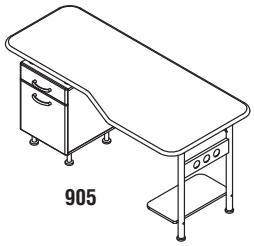

- Box-file pedestal.
- Floor-supported CPU shelf.
- Distinctive styling

Model No.	Dimensions	Wt.	List Price
905	63"W x 28 3/4"D x 29"H	132#	$754

SANTOS PC DESK

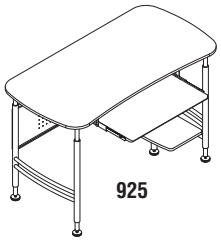

- Slide-out keyboard tray.
- Includes perforated-steel modesty panel.
- CPU shelf mounts to either inside or outside right-hand leg.

Model No.	Dimensions	Wt.	List Price
925	47 1/4"W x 23 1/2"D x 29"H	46#	$562

Total 100# capacity = 75 for top 25 for shelf

ACCENT SHELVING

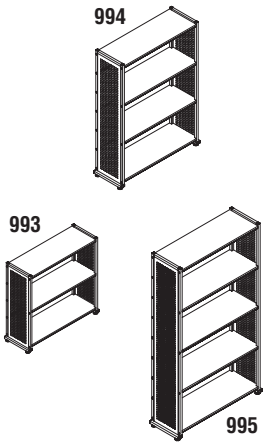

- Perforated-steel uprights with thermofoil shelves.
- Standard with either 3, 4 or 5 fixed shelves.
- 45 lb. weight capacity per shelf.
- 1/2" Thick Shelves

Model No.	Description	Dimensions	Wt.	List Price
993	3-Shelf	31 1/4"W x 11"D x 31"H	40#	$235
994	4-Shelf	31 1/4"W x 11"D x 44 1/2"H	50#	$259
995	5-Shelf	31 1/4"W x 11"D x 58"H	60#	$272

EMPIRE MOBILE PC STATION

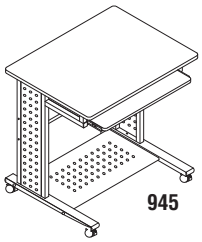

- Slide-out keyboard tray.
- Perforated-steel CPU shelf.
- Totally mobile on 4 casters, 2 locking.
- Available in Anthracite (ANT), Medium Cherry (MEC)

Model No.	Dimensions	Wt.	List Price
945	29 3/4"W x 23 1/2"D x 29 3/4"H	41#	$210

PORTRAIT PC DESK CART

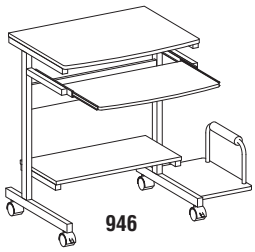
946

- Slide-out keyboard tray with mouse platform.
- CPU platform mounts left or right.
- Totally mobile on 5 casters, 2 locking.

Model No.	Dimensions	Wt.	List Price
946	36 1/2"W x 19 1/4"D x 31"H	50#	$210

ARGO PC WORKSTATION

947

- Perforated steel slide-out keyboard tray and CPU shelf.
- Totally mobile on 4 casters, 2 locking.

Model No.	Dimensions	Wt.	List Price
947	31 1/2"W x 19 3/4"D x 30 1/4"H	48#	$210

FPD COMPUTER TABLE

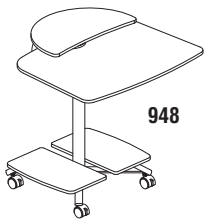
948

- Raised flat panel platform.
- Printer and CPU platforms.
- CD holder.
- Totally mobile on 4 locking casters.

Model No.	Dimensions	Wt.	List Price
948	28 1/2"W x 26"D x 29 1/2"H	20#	$210

LAPTOP CADDY

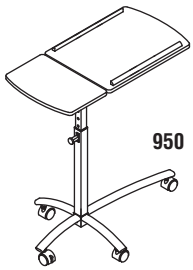
950

- Height adjustable steel frame.
- Weight Capacity 50#
- Split top tilts for ergonomic use.
- Mobile on 4 locking casters.
- Available in Anthracite (ANT), Medium Cherry (MEC)

Model No.	Dimensions	Wt.	List Price
950	29 1/2"W x 20"D x 27-38"H	27#	$210

MOBILE ARCH COMPUTER DESK

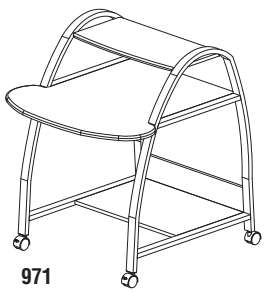
971

- Computer desk for laptop or PC.
- Heavy duty arched leg design for greater strength and stability.
- Top shelf for laptop or screen; middle shelf perfect for keyboard.
- Bottom printer shelf.
- Thermofoil laminate surfaces.
- Metallic-gray powder-coated finish.
- Mobile on 4 casters, 2 locking.

Model No.	Dimensions	Wt.	List Price
971	31 1/2"W x 34 1/2"D x 37"H	42#	$259

VISION COMPUTER DESK

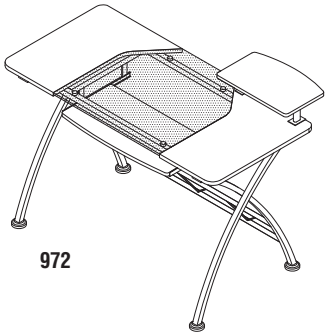

972

- Contemporary glass inset desktop perfect for laptop or screen.
- Smoked black glass inset with Anthracite thermofoil surface; white backed clear glass with Medium Cherry thermofoil surface.
- Sleek steel cross leg design; metallic-gray powder coated finish.
- Top accessory shelf – can locate on the left or right side of the desk top.
- Slide-out keyboard tray: 24"W x 11 3/4"D at center; 10 1/2"D at ends.

Model No.	Dimensions	Wt.	List Price
972	47 1/4"W x 27"D x 34"H	59#	$346

VISION GLASS TOP PEDESTAL

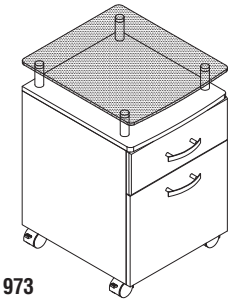

973

- Attractive raised glass top smoked black glass with Anthracite thermofoil surface; white backed clear glass with Medium Cherry thermofoil surface.
- Storage companion for the 972 glass inset top desk.
- One box and one file drawer.
- Standard lock on drawers.
- Mobile on 5 casters, 2 locking.
- 50# maximum weight capacity.

Model No.	Dimensions	Wt.	List Price
973	17 1/4"W x 18"D x 24"H	51#	$346

MACHINE STANDS

- All models in all finishes are available on both the Quick-Ship and Fast Freight delivery programs with no quantity limitations.

HIGH WIRE CART

955

- Multi-purpose cart for small machines, projectors, etc.
- Slide-out wire basket, steel posting shelf and three additional shelves along with adjustable flip-up shelf.
- Mobile on 4 casters, 2 locking.
- 125 lb. load capacity.

Model No.	Dimensions	Wt.	List Price
955*	23 1/2"W x 15"D x 37 1/2"H	22#	$247

***Note:** Limited quantities available.

PEDESTALS

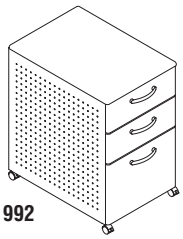

992

- Attractive thermofoil surface treatments on drawer fronts and tops match workstations.
- Sides feature perforated steel.
- Ball-bearing suspensions for quiet, smooth drawer operation.
- Mobile on 5 casters, 2 locking.

Model No.	Description	Dimensions	Wt.	List Price
992	Box-Box-File	15"W x 22"D x 27 1/2"H	70#	$389

ADJUSTABLE COMPUTER TABLE

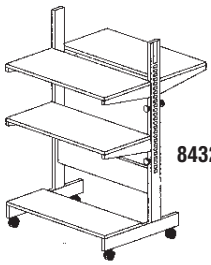

- All frames painted Black.
- Shelves are adjustable to an infinite amount of locations between 14 to 48 inches. No tools required.
- Adjustable Shelves: 32" x 15", Bottom Shelf: 31 1/4" x 11 3/4".
- 2" Casters provided (two locking).
- Easily reconfigures for other family members or office partners.
- Ships UPS.
- Shelves support 100 lbs. each.
- Medium Cherry or Gray surfaces **only**.

Model No.	Dimensions	Wt.	List Price
8432SO	32"W x 31"D x 50"H, 4 shelves	65#	$576

MOBILE COMPUTER WORKTABLE

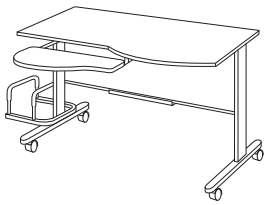

- Laminate worksurface.
- Retractable keyboard tray with integrated wrist rest and pencil tray.
- Perforated modesty panel adds strength.
- CPU holder may be mounted on left or right and adjusts to fit CPU towers up to 9 1/2" wide.
- 2" casters provided (two Locking).

Model No.	Dimensions	Wt.	List Price
8100TD	57"W x 23 1/2"D x 29"H	49#	$562

*Available in Gray/Dove Gray, Medium Cherry/Metallic Gray and Anthracite/Metallic Gray **Only**.*

MOBILE MULTIMEDIA COMPUTER WORKSTATION

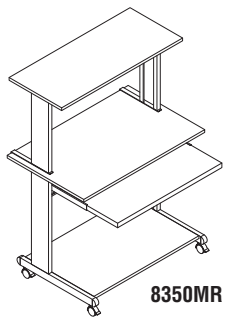

- Steel and laminate construction provides strength and durability.
- Full-width retractable platform supports both a keyboard and mouse.
- Large bottom shelf supports CPU towers, left or right.
- 2" casters provided (two Locking).

Model No.	Dimensions	Wt.	List Price
8350MR	36 3/4"W x 21 1/4"D x 50"H	72#	$636

*Available in Gray/Dove Gray, Medium Cherry/Metallic Gray and Anthracite/Metallic Gray **Only**.*

PRESENTATION STAND

- Designed to support laptops, overhead projector, or LCD projector.
- Front surface supporting projectors is adjustable to three positions: 31", 33" and 37"H.
- Standard casters, two locking.
- Top surface is 38 1/2"H providing a comfortable position for standing presentations.
- Rugged steel frame construction with attractive perforated leg detail. All threaded, metal-to-metal connections.

Standard Finishes: Black frame with reversible Anthracite/Folkstone surfaces.

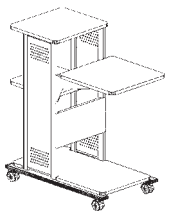

Model No.	Dimensions	Wt.	List Price
1010PC	18 1/2"W x 36"D x 38 1/2"H	75#	$647

AUDIO/VISUAL CART

- Designed to support up to 35"TV / Monitor and other A/V equipment.
- All three shelves measure 36 1/2"W x 26"D x 3/4"H.
- Middle shelf adjustable on 2" increments to 5 positions.
- Includes standard safety strap and 4-outlet power module.
- Rugged steel frame construction with attractive perforated leg detail. All threaded, metal-to-metal connections.
- Standard 3" dia. Casters, two locking.
- 400 lb. capacity

Standard Finishes: Black frame with reversible Anthracite/Folkstone surfaces.

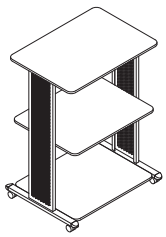

Model No.	Dimensions	Wt.	List Price
1010AV	36 1/2"W x 32"D x 42 3/4"H	91#	$831

HOSPITALITY CART

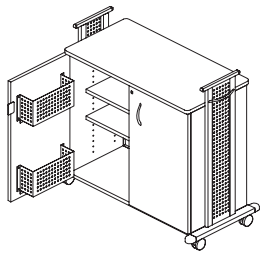

- Consistent design details with the 1010PC and 1010AV.
- Comes standard with two adjustable shelves.
- Locking casters provide easy mobility.
- Left-side door has two perforated steel storage pockets sized perfectly for 2 liter bottles.
- Doors have self-closing cabinet hinges, attractive door pull, and standard lock.
- Handle provided on both left and right legs at a comfortable operating height.
- Easy to assemble using quarter-turn cam fasteners.
- **Standard Finishes:** Black frame with Anthracite surfaces and shelves.

Model No.	Dimensions	Wt.	List Price
1015HC	45 1/2"L x 21 3/4"W x 42 3/4"H	158#	$1011

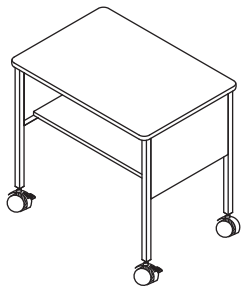

- Steel construction, thermafoil top with a 29"W x 14"D shelf. Provides 11 1/2"H opening.
- Square tubing legs with dual wheel casters, two with locks.
- 200# weight capacity.
- Ships UPS.
- **Finishes:** Anthracite/Metallic Gray, Gray thermafoil with Dove Gray paint.

Model No.	Dimensions	Wt.	List Price
2140CA	30"W x 21"D x 26 1/2"H	39#	$291

MOBILE UTILITY CABINETS WITH STEEL EXTERIOR

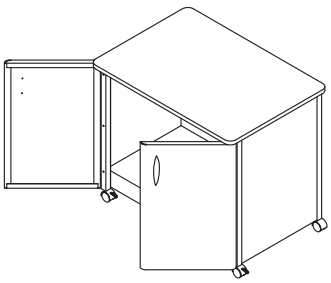

- All steel cabinet with low-pressure laminate top.
- Roll formed steel doors.
- Casters for mobility (2 locking).
- Does not include interior middle shelf.
- 150# weight capacity.
- Ships UPS.
- **Finishes:** Gray low-pressure laminate with Dove Gray paint and Oak low-pressure laminate with Putty paint **only**.

Model No.	Dimensions	Wt.	List Price
2160MU*	30"W x 21"D x 26 1/2"H	64#	$519 ** Limited quantities available in Oak Putty.*

MOBILE UTILITY CABINETS WITH LAMINATE EXTERIOR

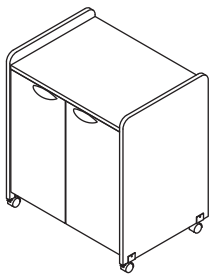

- Top surface is large enough for copiers, fax machines or coffee machines 25 1/2" wide x 20" deep.
- All low-pressure laminate sides, doors and top. Steel back, shelf and bottom.
- Interior shelf adjusts in height in four positions in 2" increments.
- Hinged doors provide 110˚ swing.
- 1 5/8" dual wheel casters add mobility (two locking).
- 150# weight capacity.
- Ships UPS.
- Surfaces standard in Mahogany and Nebula Gray **only**. Black paint.

Model No.	Dimensions	Wt.	List Price
2110MU	27"W x 20"D x 31"H	89#	$507

DRAFTING FURNITURE

Ranger® Drawing Tables
Ranger Team Tables
Futur Matic® Drawing Tables
Prokits
Straightedges
Vertical Hanging Files
Plan Files

DRAWING TABLES

Intertek

RANGER® STEEL 4-POST & SPLIT-TOP

Drawing Boards: Thermally fused 1" thick Birch woodgrain low-pressure laminate with steel end cleats only. Includes paper apron.
Top Height: 37" from floor.
Tilt Angle: 50° from horizontal.
Available Options:
Tool Drawer: Comes with insert tray and lock with two keys.
Shallow Plan Drawer: Convenient storage for papers and reference materials. Not available with the split-top table.
Table is shipped knocked down.

Drawer Dimensions:	Height	Width	Depth
Tool Drawer	3 3/8"	10 3/8"	27 3/8"
Shallow Drawer			
Table 7734B	1 5/8"	24 1/4"	27 3/8"
Table 7736B	1 5/8"	36 1/4"	27 3/8"
All other tables	1 5/8"	48 1/4"	27 3/8"

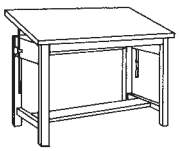

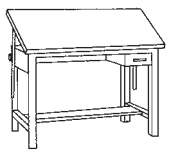

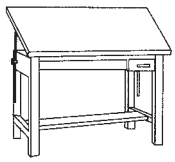

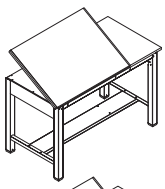

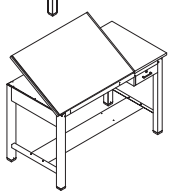

Model No.	Description	Wt.	List Price
Ranger Steel 4-Post Table only. No drawers.			
7732	30" x 42"	108#	$1304
7734	37 1/2" x 48"	118#	$1399
7736	37 1/2" x 60"	157#	$1474
7737	37 1/2" x 72"	167#	$1785
7738	43 1/2" x 72"	177#	$1958
7739	43 1/2" x 84"	185#	$2176
Ranger Steel 4-Post A Combination Table with tool drawer only.			
7732A	30" x 42"	134#	$1517
7734A	37 1/2" x 48"	146#	$1627
7736A	37 1/2" x 60"	160#	$1668
7737A	37 1/2" x 72"	177#	$1842
7738A	43 1/2" x 72"	187#	$2095
7739A	43 1/2" x 84"	195#	$2253
Ranger Steel 4-Post B Combination Table with tool and shallow drawers.			
7734B	37 1/2" x 48"	156#	$1769
7736B	37 1/2" x 60"	172#	$1878
7737B	37 1/2" x 72"	194#	$2019
7738B	43 1/2" x 72"	204#	$2285
7739B	43 1/2" x 84"	212#	$2494

Ranger Split-Top Table only. No drawers.

Model No.	Overall	Tilt Surface	Fixed Surface	Wt.	List Price
7772	30" x 60"	42"W	18"W	150#	$2122
7773	30" x 72"	48"W	24"W	160#	$2305

Ranger Split-Top A Combination. Table with tool drawer only.

Model No.	Overall	Tilt Surface	Fixed Surface	Wt.	List Price
7772A	30" x 60"	42"W	18"W	155#	$2492
7773A	30" x 72"	48"W	24"W	165#	$2677

RANGER® TEAM TABLES

Mayline's Ranger Table is the perfect solution for project or other team meetings. The Team Table has the same great strength and quality as our standard Ranger drafting table which is the result of over 50 years of experience in the drafting industry. A variety of storage under the standing height table can house project or meeting materials.

- Rectangular shape 36"D x 96"W x 42"H.
- Heavy-duty steel base provides strength and stability and is available as standard in Mayline Corporate colors.
- High pressure laminate top with 3mm edge banding.
- All Mayline Corporate color HPLs available from Wilsonart, Nevamar,Pionite and Formica.
- Custom colors for storage or table elements available upon request with an extended lead time. Please call Customer Service for a quotation.

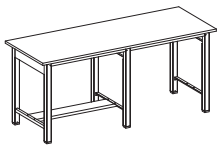

Model No.	Description	Wt.	List Price
7760	36"D x 96"W x 42"H Ranger Base Standing Height Table Interior Frame Dimensions 23"D x 41 1/4"W per Leg Section (85 1/2"W overall) x 39"H	170#	$2239

The Ranger Team Table can be used with Mayline Plan Files, Lateral Files and Bookcases to store a variety of team and project materials. Refer to interior table dimensions to verify how many units will fit beneath the table. Please contact Customer Service with questions.

RANGER® TEAM TYPICALS

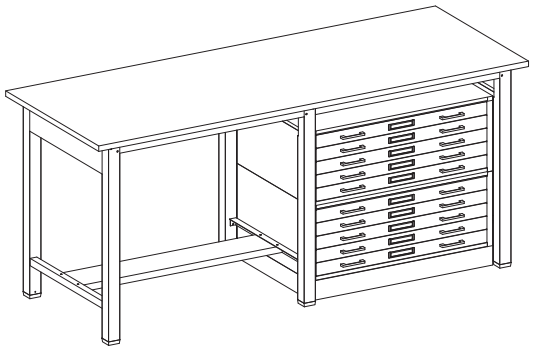

RANGER TEAM TYPICAL #1 – Any combination of Interlocking Files can be used – 7 1/2" Drawers, 5-Drawer and 10-Drawer models as seen in the Price List page 323.

Consists of:

QTY.	MODEL NO.	DESCRIPTION	LIST PRICE EACH
1	**7760**	Team Table	$2239
1	**7767U**	Steel Cap	$535
1	**7767W**	Flush Base	$369
2	**7767**	5-Drawer Files	$2315

RTT1 **TOTAL: $7774**

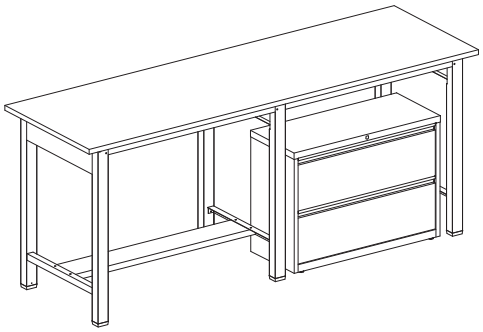

RANGER TEAM TYPICAL #2 – Back-to-back laterals would extend beyond the leg structure of the table.

Consists of:

QTY.	MODEL NO.	DESCRIPTION	LIST PRICE EACH
1	**7760**	Team Table	$2239
1	**HLT362**	Lateral File	$852

RTT2 **TOTAL: $3091**

ECONOMY RANGER® STEEL 4-POST

Drawing Board: Wood core with thermally fused Fog Gray low-pressure laminate surface.
Top Height: 37" from floor.
Tilt Angle: 50° from horizontal.
Available Options: Tool Drawer, Shallow Plan Drawer (locks not available).

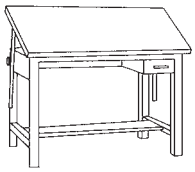

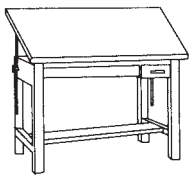

Model No.	Description	Wt.	List Price
Economy Ranger Steel 4-Post Table only. No drawers.			
7724	38 1/2" x 48"	110#	$1282
7726	38 1/2" x 60"	150#	$1306
Economy Ranger Steel 4Post A" Combination Table with tool drawer only.			
7724A	38 1/2" x 48"	138#	$1527
7726A	38 1/2" x 60"	152#	$1562
Economy Ranger Steel 4-Post B" Combination Table with tool and shallow drawers.			
7724B	38 1/2" x 48"	148#	$1627
7726B	38 1/2" x 60"	160#	$1672

WOOD 4-POST

Drawing Tops: Thermally fused Birch low-pressure laminate with steel end cleats.
Top Height: 37" from floor.
Tilt Angle: 50° from horizontal.
Available Options:
Tool Drawer: Equipped with removable insert tray, individual lock with two keys.
Shallow Plan Drawer: Storage drawer for papers and reference materials.
Table is shipped knocked down.

Drawer Dimensions:	Height	Width	Depth
Tool Drawer	3 3/4"	10 3/4"	25"
Shallow Plan Drawer Table 7707-B	1 7/8"	46"	25"

- 200 lb. weight capacity
- Drawer interiors are finished.

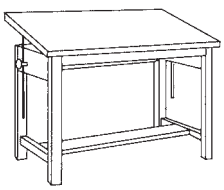

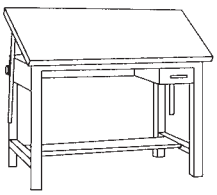

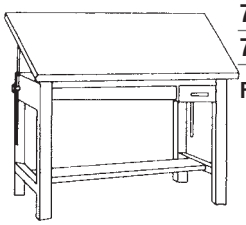

Model No.	Description	Wt.	List Price
Wood 4-Post only. No drawers.			
7706	37 1/2" x 60"	137#	$2742
7707	37 1/2" x 72"	154#	$2957

Finishes: Standard - Naturalist, Golden Oak, Unfinished

Wood 4-Post A Combination with tool drawer.

7706A	37 1/2" x 60"	147#	$3042
7707A	37 1/2" x 72"	164#	$3256

Finishes: Standard - Naturalist, Golden Oak, Unfinished

Wood 4-Post B Combination with tool and shallow drawers.

7706B	37 1/2" x 60"	160#	$3194
7707B	37 1/2" x 72"	172#	$3427

Finishes: Standard - Naturalist, Golden Oak, Unfinished

FUTUR-MATIC® DRAWING TABLES

Drawing Boards: Thermally fused Fog Gray or Birch low-pressure laminate with steel end cleat. Hardwood pencil trough.

Top Height Range: 18" travel range, 30" to 48".

Tilt Angle: Horizontal tilt to 89˚.

Electrical System: 110V, 60 Hz, 24V DC motor. Draws 1.2 amps under full load.

FM T/C Drive System: 250 pounds of lifting capacity and 150 foot pounds of tilting torque. All gear drive. No belts or pulleys.

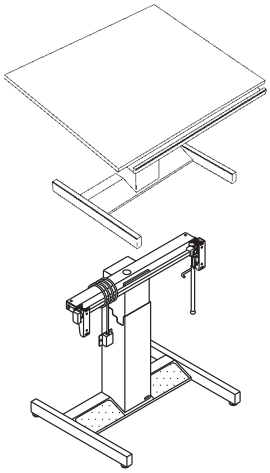

Model No.	Description	Wt.	List Price
Futur-Matic with electric height and manual tilt adjustment.			
8693B	30" x 42"	160#	$5324
8694B	37 1/2" x 48"	180#	$5711
8696B	37 1/2" x 60"	190#	$5849
8697B	37 1/2" x 72"	242#	$6005
Power Bases with 29" - 47" height adjustment. Power height. Manual tilt.			
81370A6	(w/o bd. brackets)	104#	$4302
3117	Board brackets for 81370A6	10#	$154

Board brackets sold separately. Required for addition of all work surfaces.

NOTE: Mounting hole patterns for digitizer tablets vary from manufacturer to manufacturer and require different brackets. Please contact your digitizer tablet dealer or manufacturer first to obtain this information before ordering.

LIGHT TABLES

Drawing Boards: Self-contained light box with translucent 1/8" acrylic diffuser panel, 1/4" clear glass and hardwood frame with Naturalist finish.

Dimming Control Range: 0 - 325 foot candles, with solid state, full-range dimming control.

Lighting: 30" x 36" Four 30W Tubes (supplied) or 30" x 48" Four 40W Tubes (supplied). All tubes must be cool white rapid-start only.

Electrical Requirements: 120V, 60 Hz, 2.0 Amps.

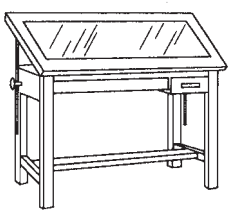

Model No.	Top Size	Glass Size	Wt.	List Price
Ranger Steel 4-Post Light Tables with tool and shallow drawer units.				
7734BLT	37 1/2" x 48"	30" x 36"	250#	$6727
7736BLT	37 1/2" x 60"	30" x 48"	256#	$7107
Colors: Standard - White, Desert Sage, Gray				
Replacement Light Tops				
20627R3	37 1/2" x 48"	30" x 36"	126#	$5168
20628R3	37 1/2" x 60"	30" x 48"	146#	$5540

Note: Glass used is 1/4" thick clear with swiped edges. When purchasing light tops separately, specify what type table is being used so proper hardware is supplied.

Finishes: Standard - Naturalist

PROKITS

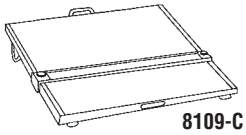

8109-C

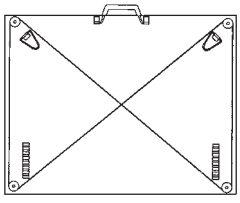

Model No.	Description	Wt.	List Price
PROFESSIONAL DRAWING KITS (PROKITS)			
Woodgrain Low-Pressure Laminate w/Transparent Edge Kit Rule			
8109C	18" x 24"	12#	$326
8111C	15" x 20"	8#	$316
8115C	30" x 42"	31#	$471

STRAIGHTEDGES

MAYLINE STRAIGHTEDGE SPECIFICATIONS

Delrin® rollers best for sheets or metal rollers for vellum and other paper medium.

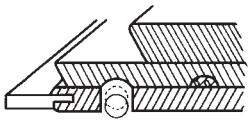

Model No.	Length		Wt.	List Price
Mobile Parallel Ruling Straightedge w/E-Z Grip Cap with Metal Rollers				
7271A	36"	Above-board mounting hardware included	2.6#	$368
7272A	42"		2.9#	$385
7273A	48"		3.3#	$438
7275A	60"		4.1#	$576
Mobile Parallel Ruling Straightedge w/E-Z Grip Cap & Armoredge® with Metal Rollers				
7271ASE	36"	Above-board mounting hardware included	2.5#	$478
7272ASE	42"		2.9#	$509
7273ASE	48"		3.3#	$573
7275ASE	60"		4.1#	$763

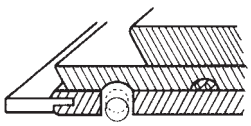

Mobile Parallel Ruling Straightedge w/E-Z Grip Cap with Delrin Rollers				
D7270A	30"	Above-board mounting hardware included	2.3#	$362
D7271A	36"		2.6#	$378
D7272A	42"		2.9#	$393
D7273A	48"		3.3#	$441
D7275A	60"		4.1#	$581
Mobile Parallel Ruling Straightedge w/E-Z Grip Cap & Armoredge® with Delrin Rollers				
D7271ASE	36"	Above-board mounting hardware included	2.5#	$500
D7272ASE	42"		2.9#	$514
D7273ASE	48"		3.3#	$534
D7275ASE	60"		4.1#	$733
Mobile Parallel Ruling Straightedge with Metal Rollers				
7260A	30"	Above-board mounting hardware included	1.9#	$268
7261A	36"		2.1#	$283
7262A	42"		2.4#	$297
7263A	48"		2.7#	$316
7265A	60"		3.3#	$411

MAYLINE STRAIGHTEDGE SPECIFICATIONS

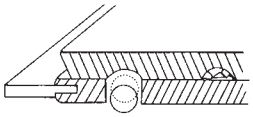

Model No.	Length		Wt.	List Price
Mobile Parallel Ruling Straightedge w/Armoredge® with Metal Rollers				
7261ASE	36"	Above-board mounting hardware included	2.2#	$419
7262ASE	42"		2.4#	$437
7263ASE	48"		2.8#	$452
7265ASE	60"		3.4#	$549
Mobile Parallel Ruling Straightedge with Delrin Rollers				
D7260A	30"	Above-board mounting hardware included	1.9#	$259
D7261A	36"		2.1#	$277
D7262A	42"		2.4#	$293
D7263A	48"		2.8#	$309
D7265A	60"		3.4#	$372
Mobile Parallel Ruling Straightedge w/Armoredge® with Delrin Rollers				
D7261ASE	36"	Above-board mounting hardware included	2.2#	$431
D7262ASE	42"		2.4#	$444
D7263ASE	48"		2.8#	$461
D7265ASE	60"		3.4#	$541

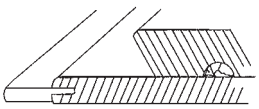

E-Z Grip Parallel Ruling Straightedge				
7250A	30"	Above-board mounting hardware included	1.7#	$251
7251A	36"		2.0#	$268
7252A	42"		2.3#	$283
7253A	48"		2.6#	$297
7255A	60"		3.1#	$393
E-Z Grip Parallel Ruling Straightedge w/Armoredge®				
7251ASE	36"	Above-board mounting hardware included	2.0#	$391
7252ASE	42"		2.3#	$410
7253ASE	48"		2.6#	$421
7255ASE	60"		3.1#	$535
Conversion Kit				
7302D	Conversion Kit – includes complete hardware and mounting attachments to convert any size above-board straightedge to underboard.		1.0#	$164

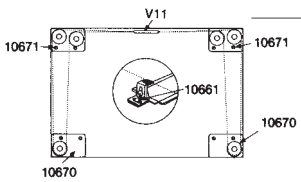

DRAWING ACCESSORIES

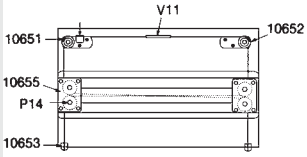

The numbers indicated in the illustration are for part identification only.

Model No.	Length	Wt.	List Price
E-Z Grip Blade Only w/Armoredge®			
7251SE	36"	1.8#	$274
7252SE	42"	2.1#	$292
7253SE	48"	2.4#	$329
7255SE	60"	3.0#	$392
Underboard Attachment			
7302A	30" to 42"	0.6#	$118
7302B	48" to 72"	0.6#	$125
7302C	84" to 96"	0.6#	$129
Above Board Attachment Only			
7301A	30" to 42"	0.4#	$97
7301B	48" to 72"	0.4#	$103
7301C	84" to 96"	0.4#	$111
Hardware Bags			
7306	Replacement hardware bag for above-board straightedge (Edgemount)	0.5#	$45
7307	Hardware for mold edge surfaces	1.0#	$107
7308	Hardware bag for above-board straightedge (Surface Mount)	1.0#	$45
7 x 7 Lubricated Stainless Steel Cable w/Nylon Coating			
7355100	100' Spool	0.5#	$93
7355300	300' Spool	0.8#	$250
7355A	Replacement Cable for 30" - 42" straightedge, 19 feet	0.1#	$30
7355B	Replacement Cable for 48" - 60" straightedge, 23 feet	0.1#	$41
7355C	Replacement Cable for 72" - 96" straightedge, 32 feet	0.1#	$54

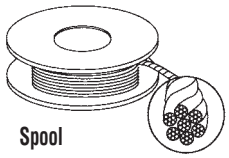

Spool

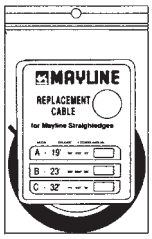

Cut to length coils. Save time in measuring, cutting, and coiling. Pre-packed.

Note: For all types of parallel ruling attachments. Braided wire is corrosion resistant. Outside diameter .035".

Model No.	Description	Wt.	List Price
Straightedge Brake			
7305	Parallel Ruling Straightedge Brake for all Mayline above-board blades; 2 brakes per package.	0.1#	$52

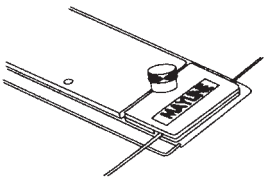

One slight twist of the knob locks the straightedge into position enabling complete freedom of hands for use of lettering sets or inking. Also prevents loss of position due to bumping or adjusting table.

Note: Standard on all new above-board straightedges.

Touch Up Paint			
9552	Must specify color, some not available.	1.0#	$31

Touch up paint matched for all Mayline metal finishes. Available in 12 oz. pressurized spray cans. Ground shipment only.

Drawing Vinyl			
9501V	24" x 30"	4#	$86
9511V	30" x 36"	45#	$107
9503V	30" x 42"	5#	$113
9504V	37 1/2" x 48"	10#	$175
9506V	37 1/2" x 60"	15#	$201
9507V	37 1/2" x 72"	18#	$241

Color: Green on one side, Off-White other side. For clear vinyl, add C suffix.

When ordering drawing vinyl with tables, we will apply it to your table top with doublefaced tape along the top edge only for an additional $100 list. Never cement vinyl to your drawing top. May cause warpage or damage.

VERTICAL HANGING FILES

Ideal choice for economical, mobile filing of active documents.

Rolling Stands: Constructed of tubular steel finished with an electrostatically applied high solid polyester paint. Front locking casters.

Clamps: Spring-loaded metal mounting clips with metal wing knobs. Hold up to 100 sheets. Includes plastic ID holders and cards.

Hangers: Metal pivot hangers for easy removal of clamps.

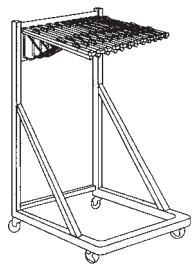

Model No.

Vertical File Rolling Stand Complete (**Adjusts:** 45" - 60"H and 28 1/2 - 42 1/2"D)

	Max. Filing Width	Description	Wt.	List Price
9321	18"	Rolling stand w/12 hangers and clamps	63#	$1432
9322	24"	Rolling stand w/12 hangers and clamps	66#	$1494
9323	30"	Rolling stand w/12 hangers and clamps	69#	$1560
9324	36"	Rolling stand w/12 hangers and clamps	71#	$1686
9325	42"	Rolling stand w/12 hangers and clamps	75#	$1769
9329		Rolling stand only; Height adjusts from 45 1/4" to 60"H. Depth adjusts from 28 1/2" to 43". Width is 26 3/4".	39#	$681
9329H		Rolling stand w/hangers (no clamps)	51#	$944

Color: Standard - Sand Beige

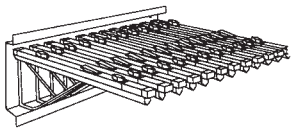

Vertical File Wall Rack Complete

	Max. Filing Width	Description	Wt.	List Price
9301	18"	Wall rack w/12 hangers and clamps	46#	$911
9302	24"	Wall rack w/12 hangers and clamps	48#	$979
9303	30"	Wall rack w/12 hangers and clamps	50#	$1043
9304	36"	Wall rack w/12 hangers and clamps	54#	$1167
9305	42"	Wall rack w/12 hangers and clamps	58#	$1247
9309		Wall rack only; 10 1/4"H x 23 1/8"L	6.5#	$99
9309H		Wall rack w/12 hangers (no clamps)	18.5#	$414

Color: Standard - Sand Beige

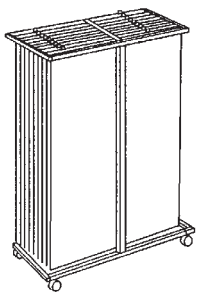

Expandable Mobile Plan Center - Adjustable vertical file cart

	Max. Filing Width	Description	Wt.	List Price
9429	27" - 39"	Expandable file cart, 40"-52" H x 16" D 1200 sheet, 12 clamp capacity	25#	$733

Note: Accepts clamps of 24", 30", and 36" length. (not included)

Color: Standard - Sand Beige

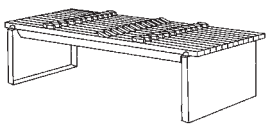

Vertical File End Resting Wall Rack Complete

	Max. Filing Width	Description	Wt.	List Price
9311	18"	Wall rack with 12 clamps	18#	$577
9312	24"	Wall rack with 12 clamps	22#	$641
9313	30"	Wall rack with 12 clamps	24#	$711
9314	36"	Wall rack with 12 clamps	28#	$836
9315	42"	Wall rack with 12 clamps	32#	$919
9319		Wall rack only for End Resting Clamps 8"H x 15"L	6#	$100

Color: Standard - Sand Beige

VERTICAL HANGING FILES

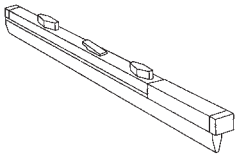

Clamps Only	Size	Qty.	Wt.	List Price
93316	18"	6/ctn.	6#	$240
93326	24"	6/ctn.	8#	$274
93336	30"	6/ctn.	9#	$302
93346	36"	6/ctn.	10#	$365
93356	42"	6/ctn.	12#	$404

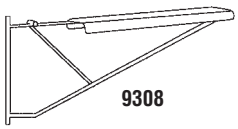

9308

Hangers Only	Description	Wt.	List Price
9308	For clamps 9331 - 9335 packed 12 per carton	12#	$347

Data File	Description	Wt.	List Price
9390	Wall rack w/12 Data Files.	28#	$470
9391	Single Data File extension w/12 Data Files. Use with 9321-25	32#	$561
9397	Data Files only. Packed 12 per carton.	22#	$393
9398	Single Data File extension w/o Data Files. Use with 9321-25	10#	$171

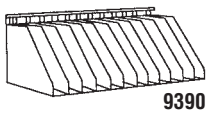

9390

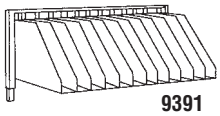

9391

Vertical File Parts	Description	Wt.	List Price
10550	Knobs, 12 per package	.50#	$55
10551	Springs, 12 per package	.50#	$28
10552	T-Bolts, 12 per package	.50#	$40
10553	Labels and Holders, 12 per package	1#	$32

PLAN FILES

C-FILES® (NOTE: Not on GSA)

Self-contained steel C-Files® have integral cap and can be bolted together for stacking. Drawers have front metal plan depressor and rear hood to keep documents flat and orderly. High base designed to support one file. Drawer pulls are chrome. Files stack five high on flush base.

File physical paper capacity: 1000 sheets vellum per file.
100 sheets vellum per drawer in a 10 drawer file.
200 sheets vellum per drawer in a 5 drawer file.

File weight capacity: 20 lbs. (9.1 kg) per drawer in a 10 drawer file evenly distributed.
40 lbs. (18.2 kg) per drawer in a 5 drawer file evenly distributed.

Model No.

Mayline Self-Contained Steel C-Files®

7867-68-69
C-FILE

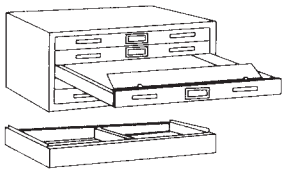

Flush Base

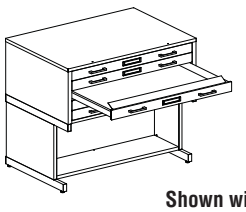

Shown with High Base

For 24" x 36" Sheets		Overall Unit Sizes			Inside Drawer Sizes			Wt.	List Price
		W	H	D	W	H	D		
7867C	Five-Drawer File	40 3/4"	15 3/8"	28 3/8"	37"	2"	25 3/4"	170#	$1913
7867D	Five-Drawer w/Dust Cover	40 3/4"	15 3/8"	28 3/8"	37"	2"	25 3/4"	177#	$2124
7977C	Ten-Drawer File	40 3/4"	15 3/8"	28 3/8"	37"	5/8"	25 3/4"	210#	$4037
7977D	Ten-Drawer w/Dust Covers	40 3/4"	15 3/8"	28 3/8"	37"	5/8"	25 3/4"	216#	$4559
7877	20" High Base with Bookshelf	40 3/4"	20"	28 3/8"	33 3/4"	-	14 1/2"	52#	$769
7867W	Flush Base	40 3/4"	4"	28 3/8"	-	-	-	14#	$333
7890X	Sanitary Base Legs	41"	6"	28 5/8"	-	-	-	15#	$316
7890Y	Sanitary Base Legs	41"	19 3/8"	28 5/8"	-	-	-	45#	$677

For 30" x 42" Sheets		Overall Unit Sizes			Inside Drawer Sizes			Wt.	List Price
		W	H	D	W	H	D		
7868C	Five-Drawer File	46 3/4"	15 3/8"	35 3/8"	43"	2"	32 3/4"	220#	$2223
7868D	Five-Drawer File w/Dust Covers	46 3/4"	15 3/8"	35 3/8"	43"	2"	32 3/4"	229#	$2435
7978C	Ten-Drawer File	46 3/4"	15 3/8"	35 3/8"	43"	5/8"	32 3/4"	305#	$4207
7978D	Ten-Drawer w/Dust Covers	46 3/4"	15 3/8"	35 3/8"	43"	5/8"	32 3/4"	310#	$4764
7878	20" High Base with Bookshelf	46 3/4"	20"	35 3/8"	44 3/4"	-	14 1/2"	63#	$870
7868W	Flush Base	46 3/4"	4"	35 3/8"	-	-	-	16#	$370
7890X	Sanitary Base Legs	47"	6"	35 5/8"	-	-	-	15#	$316
7890Y	Sanitary Base Legs	47"	19 3/8"	35 5/8"	-	-	-	45#	$677

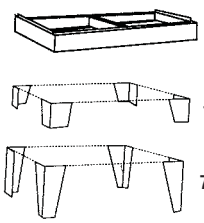

For 36" x 48" Sheets		Overall Unit Sizes			Inside Drawer Sizes			Wt.	List Price
		W	H	D	W	H	D		
7869C	Five-Drawer File	53 3/4"	15 3/8"	41 3/8"	50"	2"	38 3/4"	275#	$2651
7869D	Five-Drawer File w/Dust Covers	53 3/4"	15 3/8"	41 3/8"	50"	2"	38 3/4"	279#	$2865
7979C	Ten-Drawer File	53 3/4"	15 3/8"	41 3/8"	50"	5/8"	38 3/4"	365#	$5006
7979D	Ten-Drawer w/Dust Covers	53 3/4"	15 3/8"	41 3/8"	50"	5/8"	38 3/4"	350#	$5690
7879	20" High Base with Bookshelf	53 3/4"	20"	41 3/8"	51 3/4"	-	14 1/2"	70#	$959
7869W	Flush Base	53 3/4"	4"	41 3/8"	-	-	-	18#	$446
7890X	Sanitary Base Legs	54"	6"	41 5/8"	-	-	-	15#	$316
7890Y	Sanitary Base Legs	54"	19 3/8"	41 5/8"	-	-	-	45#	$677

HAMILTON UNIT SYSTEM™ FILES SPECIFICATIONS

Intertek GSA

Interlocking steel plan files are designed for ease of stacking. Capacity of drawers may be increased by using Model No. 7965 and 7966 magnetic drawer dividers to arrange drawers for 1/2-, 1/4-, and 1/8-size drawing. Capacity - 1000 sheets vellum per file. Drawers have front metal plan depressor and rear hood to keep documents flat and orderly. Dust covers optional. 10-drawer files have patented tracing lifter for ease of retrieval. Able to stack three high.

File physical paper capacity: 1000 sheets vellum per file.
100 sheets vellum per drawer in a 10 drawer file.
200 sheets vellum per drawer in a 5 drawer file.

File weight capacity: 20 lbs. (9.1 kg) per drawer in a 10 drawer file evenly distributed.
40 lbs. (18.2 kg) per drawer in a 5 drawer file evenly distributed.

Model No.

Hamilton Unit System Files

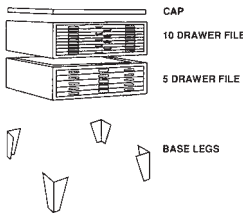

Base Option 7890X

For 24" x 36" Sheets		Overall Unit Sizes			Inside Drawer Sizes			Wt.	List Price
		W	H	D	W	H	D		
1J1	Flat Cap	43 5/16"	3/4"	33 1/4"	-	-	-	33#	$441
1J15	Five-Drawer File	43 5/16"	15 3/8"	32 1/2"	39 1/2"	2"	29"	188#	$2559
1J15D	5-Drawer w/Dust Covers	43 5/16"	15 3/8"	32 1/2"	39 1/2"	2"	29"	195#	$2834
1J117	Flush Base	43 5/16"	4"	32 1/2"	-	-	-	14#	$416
1J100	Ten-Drawer File	43 5/16"	15 3/8"	32 1/2"	37 1/2"	3/4"	29"	421#	$7688
7890X	Base Legs (set of 4)	-	6"	-				15#	$316
7890Y	Base Legs (set of 4)	-	19 3/8"	-				45#	$677

For 30" x 42" Sheets		Overall Unit Sizes			Inside Drawer Sizes			Wt.	List Price
		W	H	D	W	H	D		
2J1	Flat Cap	49 5/16"	3/4"	39 1/4"	-	-	-	44#	$552
2J15	Five-Drawer File	49 5/16"	15 3/8"	38 1/2"	45 1/2"	2"	35"	233#	$3031
2J15D	5-Drawer w/Dust Covers	49 5/16"	15 3/8"	38 1/2"	45 1/2"	2"	35"	242#	$3316
2J117	Flush Base	49 5/16"	4"	38 1/2"	-	-	-	16#	$527
2J100	Ten-Drawer File	49 5/16"	15 3/8"	38 1/2"	43 1/2"	3/4"	35"	492#	$9162
7890X	Base Legs (set of 4)	-	6"	-				15#	$316
7890Y	Base Legs (set of 4)	-	19 3/8"	-				45#	$677

For 36" x 48" Sheets		Overall Unit Sizes			Inside Drawer Sizes			Wt.	List Price
		W	H	D	W	H	D		
3J1	Flat Cap	55 5/16"	3/4"	45 1/4"	-	-	-	51#	$677
3J15	Five-Drawer File	55 5/16"	15 3/8"	44 1/2"	51 1/2"	2"	41"	293#	$3479
3J15D	5-Drawer w/Dust Covers	55 5/16"	15 3/8"	44 1/2"	51 1/2"	2"	41"	304#	$3764
3J117	Flush Base	55 5/16"	4"	44 1/2"	-	-	-	18#	$631
3J100	Ten-Drawer File	55 5/16"	15 3/8"	44 1/2"	49 1/2"	3/4"	41"	635#	$10570
7890X	Base Legs (set of 4)	-	6"	-				15#	$316
7890Y	Base Legs (set of 4)	-	19 3/8"	-				45#	$677

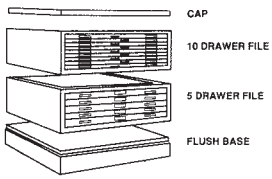

Base Option 3J117

For 42" x 72" Sheets		Overall Unit Sizes			Inside Drawer Sizes			Wt.	List Price
		W	H	D	W	H	D		
4J1	Flat Cap	79 5/16"	3/4"	51 1/4"	-	-	-	103#	$1894
4J15D	5-Drawer w/Dust Covers	79 5/16"	15 3/8"	50 1/2"	75 1/2"	1 1/2"	47"	525#	$10539
4J17	Flush Base	79 5/16"	4"	50 1/2"	-	-	-	92#	$1631

(Use Flush Base only.)

MAYLINE INTERLOCKING STEEL PLAN FILES

Intertek GSA

Available as five or ten-drawer stackable, interlocking units. Available with either front plan depressor or coated fabric dust covers. Stores up to 1,000 sheets. Able to stack three files on flush base.

File physical paper capacity: 1000 sheets vellum per file.
100 sheets vellum per drawer in a 10 drawer file.
200 sheets vellum per drawer in a 5 drawer file.

File weight capacity: 20 lbs. (9.1 kg) per drawer in a 10 drawer file evenly distributed.
40 lbs. (18.2 kg) per drawer in a 5 drawer file evenly distributed.

77671

7764

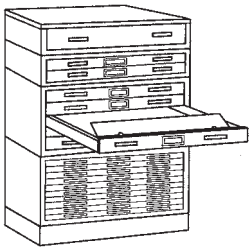

For 24" x 36" Sheets		Overall Unit Sizes			Inside Drawer Sizes			Wt.	List Price
		W	H	D	W	H	D		
7767U	Steel Cap	40 3/4"	3/4"	29 1/4"	-	-	-	25#	$535
7767	Five Drawer File	40 3/4"	15 3/8"	28 3/8"	37"	2"	25 3/4"	171#	$2315
7767D	5-Drawer w/Dust Covers	40 3/4"	15 3/8"	28 3/8"	37"	2"	25 3/4"	178#	$2588
7967	10-Drawer File	40 3/4"	15 3/8"	28 3/8"	37"	5/8"	26"	228#	$4445
7967D	10-Drawer File, Dust Covers	40 3/4"	15 3/8"	28 3/8"	37"	5/8"	26"	230#	$5022
7767W	Flush Base	40 3/4"	4"	-	-	-	-	14#	$369
77671	Deep-Drawer File	40 3/4"	7 3/16"	28 3/8"	37"	4 3/4"	26"	65#	$1469
7764	Two-Drawer File	40 3/4"	7 3/16"	28 3/8"	37"	2"	25 3/4"	78#	$1433
7890X	Sanitary Base Legs	41"	6"	28 5/8"	-	-	-	15#	$316
7890Y	Sanitary Base Legs	41"	19 3/8"	28 5/8"	-	-	-	45#	$677

Cap

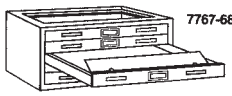
7767-68-69

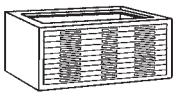
7967-68-69

For 30" x 42" Sheets		Overall Unit Sizes			Inside Drawer Sizes			Wt.	List Price
		W	H	D	W	H	D		
7768U	Steel Cap	46 3/4"	3/4"	36 1/4"	-	-	-	30#	$647
7768	Five-Drawer File	46 3/4"	15 3/8"	35 3/8"	43"	2"	32 3/4"	211#	$2653
7768D	5-Drawer w/Dust Covers	46 3/4"	15 3/8"	35 3/8"	43"	2"	32 3/4"	220#	$2934
7968	10-Drawer File	46 3/4"	15 3/8"	35 3/8"	43"	5/8"	33"	298#	$5033
7968D	10-Drawer File, Dust Covers	46 3/4"	15 3/8"	35 3/8"	43"	5/8"	33"	300#	$5700
7768W	Flush Base	46 3/4"	4"	35 3/8"	-	-	-	16#	$407
7890X	Sanitary Base Legs	47"	6"	35 5/8"	-	-	-	15#	$316
7890Y	Sanitary Base Legs	47"	19 3/8"	35 5/8"	-	-	-	45#	$677

Flush Base

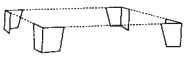
7890X

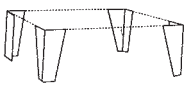
7890Y

For 36" x 48" Sheets		Overall Unit Sizes			Inside Drawer Sizes			Wt.	List Price
		W	H	D	W	H	D		
7769U	Steel Cap	53 3/4"	3/4"	42 1/2"	-	-	-	45#	$835
7769	Five-Drawer File	53 3/4"	15 3/8"	41 3/8"	50"	2"	38 3/4"	257#	$3207
7769D	5-Drawer w/Dust Covers	53 3/4"	15 3/8"	41 3/8"	50"	2"	38 3/4"	267#	$3481
7969	10-Drawer File	53 3/4"	15 3/8"	41 3/8"	50"	5/8"	39"	365#	$6053
7969D	10-Drawer File, Dust Covers	53 3/4"	15 3/8"	41 3/8"	50"	5/8"	39"	375#	$6883
7769W	Flush Base	53 3/4"	4"	41 3/8"	-	-	-	18#	$492
7890X	Sanitary Base Legs	54"	6"	41 5/8"	-	-	-	15#	$316
7890Y	Sanitary Base Legs	54"	19 3/8"	41 5/8"	-	-	-	45#	$677

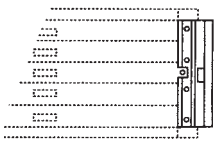
90J006

File Lock Description		Wt.	List Price
90J006	Locking Device, steel latch fits all 5- and 10- drawer steel files	2#	$107

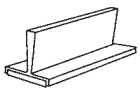
7965

Partition for Metal Plan Files (Black only)				
7965	Plastic, magnetic divider for all steel 5-drawer files 6" L x 1 5/8"W x 1 5/8" H	6 per pack	1#	$63

HAMILTON REGULAR SERIES PLAN FILES SPECIFICATIONS (NOTE: Not on GSA)

Interlocking steel plan files are designed for ease of stacking. Drawers have front plan depressor and rear hood to keep documents flat and orderly. Drawers with dust covers are optional. May be integrated with Mayline files. Able to be stacked three high.

File physical paper capacity: 1000 sheets vellum per file.
100 sheets vellum per drawer in a 10 drawer file.
200 sheets vellum per drawer in a 5 drawer file.

File weight capacity: 20 lbs. (9.1 kg) per drawer in a 10 drawer file evenly distributed.
40 lbs. (18.2 kg) per drawer in a 5 drawer file evenly distributed.

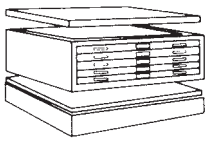

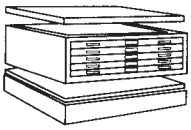

Model No.	For 24" x 36" Sheets	Overall Unit Sizes W	H	D	Inside Drawer Sizes W	H	D	Wt.	List Price
5J1	Flat Cap	40 3/4"	3/4"	29 1/4"	-	-	-	25#	$535
5J15	Five-Drawer File	40 3/4"	15 3/8"	28 3/8"	37"	2"	25 3/4"	171#	$2391
5J15D	Five-Drawer w/Dust Covers	40 3/4"	15 3/8"	28 3/8"	37"	2"	25 3/4"	178#	$2660
5J117	Flush Base	40 3/4"	4"	28 3/8"	-	-	-	14#	$369

	For 30" x 42" Sheets	Overall Unit Sizes W	H	D	Inside Drawer Sizes W	H	D	Wt.	List Price
6J1	Flat Cap	46 3/4"	3/4"	36 1/4"	-	-	-	30#	$647
6J15	Five-Drawer File	46 3/4"	15 3/8"	35 3/8"	43"	2"	32 3/4"	211#	$2738
6J15D	Five-Drawer w/Dust Covers	46 3/4"	15 3/8"	35 3/8"	43"	2"	32 3/4"	220#	$3020
6J117	Flush Base	46 3/4"	4"	35 3/8"	-	-	-	16#	$407

	For 36" x 48" Sheets	Overall Unit Sizes W	H	D	Inside Drawer Sizes W	H	D	Wt.	List Price
7J1	Flat Cap	53 3/4"	3/4"	42 1/4"	-	-	-	45#	$835
7J15	Five-Drawer File	53 3/4"	15 3/8"	41 3/8"	50"	2"	38 3/4"	257#	$3283
7J15D	Five-Drawer w/Dust Covers	53 3/4"	15 3/8"	41 3/8"	50"	2"	38 3/4"	268#	$3566
7J117	Flush Base	53 3/4"	4"	41 3/8"	-	-	-	18#	$492
7890X	Base Legs (set of 4)	-	6"	-				15#	$316
7890Y	Base Legs (set of 4)	-	19 3/8"	-				45#	$677

MUSEUM FILES SPECIFICATIONS

GSA

Self-contained Museum Files have integral cap and can be bolted together for stacking. Drawers have front metal plan depressor and rear hood to keep documents flat and orderly. Has fully enclosed drawer cabinet bottom. Drawer suspension uses greaseless nylon rimmed ball bearings to eliminate metal to metal contact and abrasion. Paint finish specially formulated to prevent outgassing. Optional high base supports one file. Able to stack three files on flush base.

File physical paper capacity: 1000 sheets vellum per file.
100 sheets vellum per drawer in a 10 drawer file.
200 sheets vellum per drawer in a 5 drawer file.

File weight capacity: 20 lbs. (9.1 kg) per drawer in a 10 drawer file evenly distributed.
40 lbs. (18.2 kg) per drawer in a 5 drawer file evenly distributed.

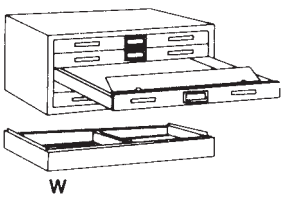

Shown with Flush Base

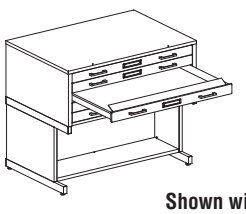

Shown with High Base

Model No.	For 24" x 36" Sheets	Overall Unit Sizes W	H	D	Inside Drawer Sizes W	H	D	Wt.	List Price
7667	Five-Drawer File	40 3/4"	15 3/8"	28 3/8"	37"	2"	25 3/4"	175#	$2727
7677	Ten-Drawer File	40 3/4"	15 3/8"	28 3/8"	37"	5/8"	25 3/4"	345#	$5451
7767W	Flush Base for 7667 & 7677	40 3/4"	4"	28 3/8"	-	-	-	14#	$369
7877	20" High Base	40 3/4"	20"	28 3/8"	-	-	-	52#	$769

	For 30" x 42" Sheets	Overall Unit Sizes W	H	D	Inside Drawer Sizes W	H	D	Wt.	List Price
7668	Five-Drawer File	46 3/4"	15 3/8"	35 3/8"	43"	2"	32 3/4"	225#	$3144
7678	Ten-Drawer File	46 3/4"	15 3/8"	35 3/8"	43"	5/8"	32 3/4"	445#	$5694
7768W	Flush Base for 7668 & 7678	46 3/4"	4"	35 3/8"	-	-	-	16#	$407
7878	20" High Base	46 3/4"	20"	35 3/8"	-	-	-	63#	$870

	For 36" x 48" Sheets	Overall Unit Sizes W	H	D	Inside Drawer Sizes W	H	D	Wt.	List Price
7669	Five-Drawer File	53 3/4"	15 3/8"	41 3/8"	50"	2"	38 3/4"	280#	$3729
7679	Ten-Drawer File	53 3/4"	15 3/8"	41 3/8"	50"	5/8"	38 3/4"	550#	$6761
7769W	Flush Base for 7669 & 7679	53 3/4"	4"	41 3/8"	-	-	-	18#	$492
7879	20" High Base	53 3/4"	20"	41 3/8"	-	-	-	70#	$959

PLAN FILES, HORIZONTAL

WOOD PLAN FILES (NOTE: Not on GSA)

- Drawer fronts and case sides are finished in oak.
- Drawer bottoms are hardboard.
- Antique brass drawer pulls.
- Bases are shipped unassembled.

File physical paper capacity: 1000 sheets vellum per file.
100 sheets vellum per drawer in a 10 drawer file.
200 sheets vellum per drawer in a 5 drawer file.

File weight capacity: 20 lbs. (9.1 kg) per drawer in a 10 drawer file evenly distributed.
40 lbs. (18.2 kg) per drawer in a 5 drawer file evenly distributed.

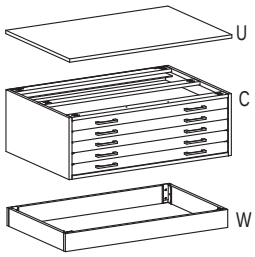

Model No.

Wood Plan Files

For 24" x 36" Sheets		Overall Unit Sizes			Inside Dimensions			Wt.	List Price
		W	H	D	W	H	D		
7717U	Cap	40 13/16"	3/4"	27 3/4"	-	-	-	30#	$635
7717C	Five-Drawer File	40 11/16"	13 7/8"	27 3/8"	37 5/8"	17/8"	25"	112#	$2336
7717W	Flush Base	40 11/16"	4"	25 3/8"	-	-	-	15#	$609

Finishes: Standard - Naturalist, Golden Oak, Unfinished
*Both sides of shelf unit.

For 30" x 42" Sheets		Overall Unit Sizes			Inside Dimensions			Wt.	List Price
		W	H	D	W	H	D		
7718U	Cap	45 5/8"	3/4"	34 3/4"	-	-	-	36#	$822
7718C	Five-Drawer File	45 1/2"	13 7/8"	34 3/8"	42 3/8"	1 7/8"	32"	140#	$2518
7718W	Flush Base	45 1/2"	4"	32 3/8"	-	-	-	18#	$676

Finishes: Standard - Naturalist, Golden Oak, Unfinished
*Both sides of shelf unit.

For 36" x 48" Sheets		Overall Unit Sizes			Inside Dimensions			Wt.	List Price
		W	H	D	W	H	D		
7719U	Cap	53 7/16"	3/4"	40 3/4"	-	-	-	52#	$1009
7719C	Five-Drawer File	53 5/16"	13 7/8"	40 3/8"	50 3/16"	15/8"	38"	172#	$3330
7719W	Flush Base	53 5/16"	4"	38 3/8"	-	-	-	22#	$787

Finishes: Standard - Naturalist, Golden Oak, Unfinished
*Both sides of shelf unit.

MOBILE B-SIZE DRAWER FILE (NOTE: Not on GSA)

Eight-drawer steel file stores up to 2,500 sheets. All-steel construction. Four casters: 2 locking, 2 non-locking. Gang lock.
Standard Finishes: Sand Beige, White, Black, Gray

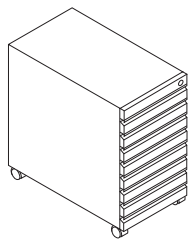

Mobile B-Size Plan File

Model No.	Overall Unit Sizes			Inside Dimensions			Wt.	List Price
	W	H	D	W	H	D		
9P810	15 1/4"	27 1/8"	27 3/4"	12 3/4"	1 3/4"	23 1/2"	109#	$1497

ROLL FILE CARTS

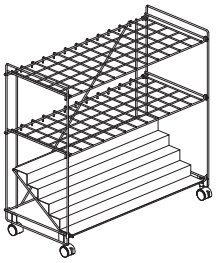

- Two sizes.
- 2" poly dual wheel non-scarring casters.
- Insert included to accommodate various size rolled documents.
- Wire construction.
- Easy, no tools required assembly.
- Black finish only.

Model No.	Description	Length	Height	Depth	Wt.	List Price
❖ **RF36**	36 - 3 1/2" Openings	34"	32"	15"	28#	$259
❖ **RF60**	60 - 2 1/2" Openings	34"	32"	15"	28#	$272

❖ *Indicates Quick-Ship models.*

TERMS AND CONDITIONS FOR COM
(Customer's Own Material)

Note: This applies to GIST™ CHAIRS, COMMUTE® CHAIRS, VALORÉ® TSH1F & TSH2F CHAIRS, and e5™ CUSHIONS when customer is providing their own material (COM).

The COM fabric must be approved prior to order fulfillment.

- Complete and submit the authorization request form.
- Provide 8" X 8" fabric sample with the form.
- Mayline will provide approval once fabric is accepted.

Upon approval, customer to provide yardage and Purchase Order to:

Mayline Company
Attn: COM Dept.
619 North Commerce Street
Sheboygan, WI 53081

Orders requesting COM will be assigned a 20 working-day lead time from the date the material is received at Mayline.

Mayline reserves the right to cancel an order at any time if COM is inadequate for any reason. Unless otherwise noted, the thread color that most closely matches the fabric will be used.

Order Size & Pricing
For COM orders in excess of 50 chairs or cushions, additional lead time will apply. Please contact Customer Service. COM Product is priced at Fabric Grade 2 and incurs a 10% of list upcharge.

Errors and Omissions
All quotations, acknowledgements and invoices are subject to corrections for any errors and omissions.

Extra Material
Mayline is not responsible for yardage submitted that is in excess of the required amount. Excess material will not be returned and will be discarded.

Cancellations/Change Orders
Orders which have entered any stage of production **may not be changed or cancelled**.

Warranty
Mayline will warrant the furniture components based on their standard warranty. COM textiles are not warranted or covered under CA117 or CA133 approvals.

Fabric Flaws
Mayline is not responsible for defects, inaccuracies, or other flaws in the fabric. Notification will be given in the event flaws are discovered.

MAYLINE®

COM – Customer's Own Material Order Form (Please Photocopy)

For Use with Commute™, Gist™, and Valoré™ TSH1F Chairs; and e5 Cushions

Please complete this form, attach a fabric swatch, and send a fabric sample (8" by 8") to:

Mayline Company
Attn: COM Department
619 N. Commerce St.
Sheboygan, WI 53081

Cancellation Policy: Orders which have entered any stage of production <u>may not be changed or cancelled</u>.

DATE MAILED: _____

Yardage Request: Yes No (Circle One)
-- OR --
Customer PO# _____

CUSTOMER INFORMATION:

Company Name _____

Contact _____

Billing address _____

Telephone _____

City _____ State _____ Zip _____

Email Address _____

MATERIAL INFORMATION:

Material Manufacturer_____

Usable width in inches _____

Fabric Name/Number _____

Fabric Source (Mill) _____

Fabric Color _____

Reversible? Yes or No (Circle One)

Pattern Repeat _____

Railroad? Yes or No (Circle One)

PRODUCT INFORMATION: CIRCLE PRODUCT TYPE **Chair** **Cushion**

<u>For *Chairs, please fill out the following:</u>

*Valoré TSH1F: 2 chairs/box *Commute (1 chair/box) *Gist (1 chair/box)

Carton Quantity	Model Number	Frame Color for Valore

Attach swatch to chair to indicate face side and desired direction.

Customer Sample:

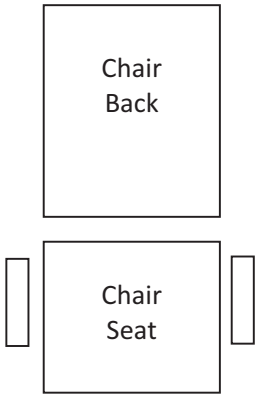

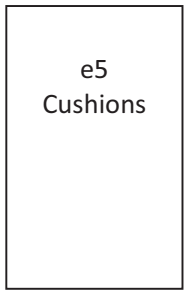

Index

Model No.	Page	List Price
0412P06	270,275,298	$82
0512P06	270,275,298	$89
0515P06	270,275,298	$93
0612P06	270,275,298	$92
0712P06	270,275,298	$94
0812P06	270,275,298	$111
0912P06	270,275,298	$121
0915P06	270,275,298	$141
1010AV	332	$831
1010PC	220,332	$647
1012P06	270,275,298	$129
1015HC	220,333	$1,011
1015P06	275,298	$148
1050LT	220	$751
10550	344	$55
10551	344	$28
10552	344	$40
10553	344	$32
10GA	187,189,191,202,220	$52
1112P06	270,275,298,306	$136
1114P06	298	$149
1114SDP06	298	$217
1115P06	275,298	$149
1212P06	270,275,298	$138
1214P06	275,298	$155
1214SDP06	298	$233
1215P06	275,298	$155
1218	305	$135
1219	308	$135
12ADJARM	237,238,239	$155
1412P06	270,275,298	$187
1415P06	275,298	$205
1505TL	60,220	$314
1515P06	275,298	$227
1612P06	270,275,298	$217
1615P06	270,275,298	$245
1801AG	238	$1,034
1801AGL	238	$1,163
19400	45,58,75	$91
19503ATW	200,316	$570
19503TA	44,58,80,90,109, 120,128,164,173, 199,307,324,326	$570
1J1	346	$441
1J100	346	$7,688
1J117	346	$416
1J15	346	$2,559
1J15D	346	$2,834
20627R3	339	$5,168
20628R3	339	$5,540
21100	326	$112
21101	326	$163
21103	326	$215
21104	326	$235
21105	326	$265
21106	326	$336
21107	326	$97
2110MU	333	$507
21124	326	$1,258
21145	326	$935
21148	326	$2,161
21172	326	$2,696
211CNR	326	$2,851

Model No.	Page	List Price
2140CA	333	$291
2160MU	333	$519
2200C	235	$309
2200FC	235	$372
2202418	326	$177
2204818	326	$264
2207218	326	$294
2300C	235	$296
2300SC	235	$468
242229	70	$1,284
2424AG	238	$782
2424AGL	238	$913
243029	70	$695
243629	70	$738
244829	70	$853
246029	70	$965
247229	70	$1,081
24801S	328	$215
2480DSE	328	$3,801
2480DSP	328	$4,265
250100	316,326	$124
250101	316,326	$211
2504K	300	$181
2522	231	$502
2528	231	$514
2547	232	$525
2J1	346	$552
2J100	346	$9,162
2J117	346	$527
2J15	346	$3,031
2J15D	346	$3,316
31124	320	$2,352
31148	320	$3,987
3117	339	$154
31172	320	$5,897
3200	232	$434
3202460	306,307,321	$570
3202472	307,321	$611
3202484	307,321	$671
3203060	306,307,321	$585
3203072	307,321	$623
3203084	307,321	$686
3203660	307,321	$606
3203672	307,321	$634
3203684	307,321	$696
3302416	306,307,321	$203
3302420	321	$219
3303016	306,307,321	$245
3303020	321	$273
3303020	321	$540
3303616	307,321	$316
3303620	321	$332
3304816	307,321	$458
3304820	321	$475
3305416	307,321	$484
3305420	321	$505
3306016	321	$513
3312416	321	$305
3312420	321	$318
3313016	321	$358
3313020	321	$373
3313616	321	$403
3313620	321	$419

Model No.	Page	List Price
3322421	321	$343
3323021	321	$358
3323621	321	$365
3324821	321	$391
3326021	321	$421
3332416	322	$321
3332420	322	$328
3333016	322	$332
3333020	322	$346
3333616	322	$346
3333620	322	$357
3352414	323	$990
3352414L	323	$1,047
3353014	323	$1,006
3353014L	323	$1,065
3353614	323	$1,036
3353614L	323	$1,109
3402430	306,307,322	$487
3402430L	322	$634
3402430LE	322	$900
3402436	322	$658
3402436L	322	$749
3402436LE	322	$983
3403030	306,307,322,323	$552
3403030L	322,323	$722
3403030LE	322,323	$993
3403036	322	$703
3403036L	322	$961
3403036LE	322	$1,072
3403630	307,322	$611
3403630L	322	$792
3403630LE	322	$1,072
3403636	322,323	$781
3403636L	322,323	$933
3403636LE	322,323	$1,231
3404830	307,322	$730
3404830L	322	$965
3404830LE	322	$1,260
3404836	322	$875
3404836L	322	$1,133
3404836LE	322	$1,500
3405430	322	$835
3405430L	322	$1,090
3405430LE	322	$1,435
3405436	322	$1,092
3405436L	322	$1,279
3405436LE	322	$1,686
3406030	307,322	$952
3406030L	322	$1,210
3406030LE	322	$1,531
3406036	322	$1,094
3406036L	322	$1,422
3406036LE	322	$1,876
3407130	322	$1,045
3407130L	322	$1,334
3407130LE	322	$1,515
3407230	307,322	$1,038
3407230L	322	$1,315
3407230LE	322	$1,650
3407236	322	$1,237
3407236L	322	$1,551
3407236LE	322	$2,046
3409030	307.322	$1,315

Index

Model No.	Page	List Price
3409030L	322	$1,691
3409030LE	322	$2,062
3409036	322	$1,530
3409036L	322	$1,987
3409036LE	322	$2,627
3434830	323	$1,066
3434830L	323	$1,295
3434830LE	323	$1,515
3434836	323	$1,183
3434836L	323	$1,416
3434836LE	323	$1,609
350100	306,307,324	$141
350101	324	$243
350117	324	$18
350118	324	$132
350119	324	$230
350142	324,326	$193
350150	324	$135
350151	324	$175
350152	324	$233
350173	324	$401
350181	324	$359
350190	222	$218
350212	306,307,321	$87
350213L	306,307,321	$284
350213R	306,307,321	$284
350214	307,321	$353
350215	307,321	$144
350216	321	$54
350217	323	$143
350217L	323	$143
350217LE	323	$143
350218	321	$47
350220	307	$183
350220	324	$183
350221	317	$163
350318	321	$98
350320L	321	$284
350320R	321	$284
350321L	324	$98
350321R	324	$98
350325L	321	$140
350325R	321	$140
350327L	324	$97
350327R	324	$97
350440	325	$971
350445	325	$1,237
350450	325	$1,302
350460	325	$878
350465	325	$1,144
350470	325	$1,206
350480	325	$1,095
350485	325	$1,362
350490	325	$1,424
3665DA1	272	$3,536
3665DB1	272	$3,647
3665DC1	272	$3,584
3665DD1	272	$3,588
3665DE1	272	$3,338
3665DX1	274	$2,701
3665NA1	272	$2,695
3665NB1	272	$2,807
3665NC1	272	$2,530
3665ND1	272	$2,749
3665NE1	272	$2,681
3665NX1	274	$1,927
36801S	328	$255
3680DA1	272	$4,055
3680DB1	272	$4,179
3680DC1	272	$3,847
3680DD1	272	$4,055
3680DE1	272	$3,789
3680DSE	328	$4,996
3680DSP	328	$5,500
3680DX1	274	$2,930
3680NA1	272	$3,142
3680NB1	272	$3,269
3680NC1	272	$2,939
3680ND1	272	$3,143
3680NE1	272	$2,879
3680NX1	274	$2,003
3680WS1	274	$3,060
3680WS1LAM	273	$3,227
3704K	300,308	$233
38363	267	$1,835
38363K	267	$1,900
3836A3	267	$2,204
3836A3K	267	$2,269
38423	267	$1,898
38423K	267	$1,962
3842A3	267	$2,288
3842A3K	267	$2,352
38483	267	$1,960
38483K	267	$2,026
3848A3	267	$2,377
3848A3K	267	$2,443
3J1	346	$677
3J100	346	$10,570
3J117	346	$631
3J15	346	$3,479
3J15D	346	$3,764
4005AG	237,239	$620
4019AG	237	$738
4021	237	$620
4265DA1	272	$4,006
4265DB1	272	$4,183
4265DC1	272	$3,839
4265DD1	272	$4,066
4265DE1	272	$3,621
4265DX1	274	$2,939
4265NA1	272	$3,027
4265NB1	272	$3,254
4265NC1	272	$2,905
4265ND1	272	$3,137
4265NE1	272	$2,701
4265NX1	274	$1,981
4280DA1	272	$4,595
4280DB1	272	$4,841
4280DC1	272	$4,421
4280DD1	272	$4,632
4280DE1	272	$4,312
4280DX1	274	$3,194
4280NA1	272	$3,540
4280NB1	272	$3,824
4280NC1	272	$3,403
4280ND1	272	$3,617
4280NE1	272	$3,090
4280NX1	274	$2,154
4280WS1	273	$3,368
4280WS1LAM	273	$3,572
4904K	300,308	$288
49263	90,199	$761
49264	90,199	$761
49265	90,199	$761
4J1	346	$1,894
4J15D	346	$10,539
4J17	346	$1,631
5000C	235	$409
5000FC	235	$382
502STB	198	$1,990
502TB	198	$2,016
503STB	198	$2,060
503TB	198	$2,088
504STB	198	$2,701
504TB	198	$2,741
505L	198	$2,358
505SL	198	$2,302
505STB	198	$2,765
505TB	198	$2,807
505WL	198	$3,090
506STB	198	$2,694
506TB	198	$2,735
507STB	198	$2,694
507TB	198	$2,735
508STB	198	$2,060
508TB	198	$2,088
509STB	198	$2,130
509TB	198	$2,161
510L	198	$2,400
510SL	198	$2,343
510WL	198	$3,149
515L	198	$2,467
515SL	198	$2,409
515WL	198	$3,226
520L	198	$2,602
520SL	198	$2,544
520WL	198	$3,362
525L	198	$2,651
525SL	198	$2,596
5300L	199	$3,872
5300SL	199	$3,806
5300WL	199	$4,620
5310L	199	$4,079
5310SL	199	$4,013
5310WL	199	$4,827
5320L	199	$3,365
5320SL	199	$3,299
5320WL	199	$3,993
5330L	199	$3,365
5330SL	199	$3,299
5330WL	199	$3,993
537MP	198	$125
543MP	198	$136
5460L	199	$5,175
5470L	199	$5,275
549MP	198	$342
5560L	199	$7,673
5570L	199	$7,873
561MP	198	$380

Index

Model No.	Page	List Price
562MP	198	$308
5J1	348	$535
5J117	348	$369
5J15	348	$2,391
5J15D	348	$2,660
6043	197	$1,471
6045	197	$1,471
6047	197	$1,471
6049	196	$1,087
604LT	196	$1,607
604LTL	196	$1,731
605	197	$1,720
605L	197	$1,878
605LT	196	$1,656
605LTL	196	$1,788
605LTW	196	$2,256
605LTWL	196	$2,388
605W	197	$2,594
605WL	197	$2,777
609LT	196	$1,704
609LTL	196	$1,835
610	197	$1,740
610L	197	$1,958
610LT	196	$1,735
610LTL	196	$1,876
610LTW	196	$2,299
610LTWL	196	$2,441
610W	197	$2,669
610WL	197	$2,848
615	197	$1,810
615L	197	$2,035
615S	197	$1,740
615SL	197	$1,899
615W	197	$2,711
615WL	197	$2,938
62363	266	$1,977
62363K	266	$2,043
6236A3	266	$2,644
6236A3K	266	$2,709
6236B3	266	$2,829
6236B3K	266	$2,894
62423	266	$2,061
62423K	266	$2,127
6242A3	266	$2,768
6242A3K	266	$2,833
6242B3	266	$2,960
6242B3K	266	$3,024
62483	266	$2,192
62483K	266	$2,257
6248A3	266	$2,944
6248A3K	266	$3,010
6248B3	266	$3,234
6248B3K	266	$3,302
6310C	235	$577
6310SC	235	$424
6446AG	238	$1,166
6446AGL	238	$1,299
645LT	196	$1,760
645LTL	196	$1,882
650	314	$2,176
650L	196	$2,431
650LT	196	$1,848
650LTL	196	$1,991
650S	197	$2,107
650SL	197	$2,265
650SW	197	$2,937
650SWL	197	$3,082
650W	197	$2,964
650WL	197	$3,096
652LTW	196	$2,338
652LTWL	196	$2,478
655LT	196	$1,839
655LTL	196	$1,971
655LTW	196	$2,468
655LTWL	196	$2,631
657LTW	196	$2,495
657LTWL	196	$2,658
670W	197	$3,124
670WL	197	$3,353
680W	197	$3,390
680WL	197	$3,635
685LTW	196	$2,409
685LTWL	196	$2,545
687LTW	196	$2,435
687LTWL	196	$2,570
690W	197	$3,567
690WL	197	$3,811
6J1	348	$647
6J117	348	$407
6J15	348	$2,738
6J15D	348	$3,020
700	314	$1,346
700B	314	$1,706
700E	314	$1,817
700H	314	$1,486
701	314	$1,440
701B	314	$1,752
701E	314	$1,989
701H	314	$1,549
702	314	$1,486
702B	314	$2,224
702E	314	$2,424
702H	314	$1,598
703	314	$1,598
703B	314	$2,270
703E	314	$2,440
703H	314	$1,737
704	314	$1,752
704B	314	$3,538
704E	314	$2,412
704H	314	$1,892
705	315	$638
706	315	$689
707	315	$783
708	315	$703
709	315	$776
710	315	$836
711	315	$776
712	315	$847
713	315	$918
714	315	$1,155
715	315	$1,200
716	315	$1,315
717	315	$576
717E	315	$753
717H	315	$647
717T	315	$720
717TE	315	$906
717TH	315	$792
718	316	$647
718E	316	$859
718H	316	$720
718T	316	$792
718TE	316	$980
718TH	316	$859
719	316	$720
719E	316	$906
719H	316	$792
719T	316	$859
719TE	316	$1,095
719TH	316	$933
720	316	$1,006
720E	316	$1,209
720H	316	$1,077
721	316	$311
721872	219	$208
722	316	$336
723	316	$395
724	318	$766
725	318	$835
7250A	341	$251
7251A	341	$268
7251ASE	341	$391
7251SE	342	$274
7252A	341	$283
7252ASE	341	$410
7252SE	342	$292
7253A	341	$297
7253ASE	341	$421
7253SE	342	$329
7255A	341	$393
7255ASE	341	$535
7255SE	342	$392
726	318	$859
7260A	340	$268
7261A	340	$283
7261ASE	341	$419
7262A	340	$297
7262ASE	341	$437
7263A	340	$316
7263ASE	341	$452
7265A	340	$411
7265ASE	341	$549
727	314	$1,393
7271A	340	$368
7271ASE	340	$478
7272A	340	$385
7272ASE	340	$509
7273A	340	$438
7273ASE	340	$573
7275A	340	$576
7275ASE	340	$763
727B	314	$2,199
727E	314	$2,391
727H	314	$1,533
728	314	$1,501
728B	314	$2,247
728E	314	$2,412
728H	314	$1,643

Index

Model No.	Page	List Price
729	314	$1,659
729B	314	$3,443
729E	314	$2,270
729H	314	$1,892
730	316	$504
7301A	342	$97
7301B	342	$103
7301C	342	$111
7302A	342	$118
7302B	342	$125
7302C	342	$129
7302D	341	$164
7305	342	$52
7306	342	$45
7307	342	$107
7308	342	$45
731	316	$562
732	316	$646
7355100	342	$93
7355300	342	$250
7355A	342	$30
7355B	342	$41
7355C	342	$54
737	316	$92
738	316	$203
739	316	$249
740	316	$281
742	317	$202
744	317	$242
745	317	$285
746	317	$345
747	317	$261
748	317	$305
749	317	$357
750	317	$65
751	317	$71
752	317	$242
753	317	$285
754	317	$331
755	317	$261
756	317	$305
757	317	$340
758	317	$86
759	317	$98
763	318	$806
764	318	$1,009
765	318	$295
76503	318	$380
76504	318	$380
7667	348	$2,727
7668	348	$3,144
7669	348	$3,729
767	318	$334
7677	348	$5,451
7678	348	$5,694
7679	348	$6,761
768	318	$404
769	318	$421
770048	219	$240
770060	219	$359
770072	219	$502
7706	338	$2,742
7706A	338	$3,042
7706B	338	$3,194
7707	338	$2,957
7707A	338	$3,256
7707B	338	$3,427
7717C	349	$2,336
7717U	349	$635
7717W	349	$609
7718C	349	$2,518
7718U	349	$822
7718W	349	$676
7719C	349	$3,330
7719U	349	$1,009
7719W	349	$787
7724	338	$1,282
772448	219	$140
7724A	338	$1,527
7724B	338	$1,627
7724WC	219	$409
7726	338	$1,306
7726A	338	$1,562
7726B	338	$1,672
773060	219	$188
773072	219	$218
773096	219	$298
7730WC	219	$494
7732	336	$1,304
7732A	336	$1,517
7734	336	$1,399
7734A	336	$1,627
7734B	336	$1,769
7734BLT	339	$6,727
7736	336	$1,474
7736A	336	$1,668
7736B	336	$1,878
7736BLT	3339	$7,107
7737	336	$1,785
7737A	336	$1,842
7737B	336	$2,019
7738	336	$1,958
7738A	336	$2,095
7738B	336	$2,285
7739	336	$2,176
7739A	336	$2,253
7739B	336	$2,494
775	319	$76
776	319	$82
7760	215,337	$2,239
7764	337	$1,433
7767	337,347	$2,315
77671	347	$1,469
7767D	347	$2,588
7767U	337,347	$535
7767W	337,347,348	$369
7768	347	$2,653
7768D	347	$2,934
7768U	347,348	$647
7768W	347,348	$407
7769	347	$3,207
7769D	347	$3,481
7769U	347	$835
7769W	347,348	$492
777	319	$295
7772	336	$2,122
7772A	336	$2,492
7773	336	$2,305
7773A	336	$2,677
778	319	$355
779	319	$434
77CRND	219	$440
780	319	$129
781	319	$172
782	319	$232
783	319	$129
784	319	$232
785	319	$154
786	319	$251
7867C	345	$1,913
7867D	345	$2,124
7867W	345	$333
7868C	345	$2,223
7868D	345	$2,435
7868W	345	$370
7869C	345	$2,651
7869D	345	$2,865
7869W	345	$446
787	315,323	$83
7877	345,348	$769
7878	345,348	$870
7879	345,348	$959
788	315,323	$89
789	315,323	$154
7890X	345,346,347,348	$316
7890Y	345,346,347,348	$677
790	319	$91
791	318	$766
792	318	$835
793	318	$859
7965	347	$63
7967	347	$4,445
7967D	347	$5,022
7968	347	$5,033
7968D	347	$5,700
7969	347	$6,053
7969D	347	$6,883
797	315	$516
7977C	345	$4,037
7977D	345	$4,559
7978C	345	$4,207
7978D	345	$4,764
7979C	345	$5,006
7979D	345	$5,690
797E	315	$657
797H	315	$586
797T	315	$616
797TE	315	$759
797TH	315	$687
798	315	$535
798E	315	$677
798H	315	$606
798T	315	$657
798TE	315	$802
798TH	315	$727
799	318	$180
7J1	348	$835
7J117	348	$492
7J15	348	$3,283

Index

Model No.	Page	List Price
7J15D	348	$3,566
8022448EH	200	$1,971
8022454EH	200	$2,065
8022460EH	200	$2,115
8022466EH	200	$2,155
8022472EH	200	$2,215
80224M	200	$1,630
8023048EH	200	$2,010
8023054EH	200	$2,080
8023060EH	200	$2,165
8023066EH	200	$2,225
8023072EH	200	$2,275
80230M	200	$1,670
8100TD	332	$562
8109C	339	$326
8111C	339	$316
8115C	339	$471
81370A6	339	$4,302
83363	266	$2,250
83363K	266	$2,315
8336A3	266	$3,240
8336A3K	266	$3,305
8336B3	266	$3,424
8336B3K	266	$3,488
83423	266	$2,495
83423K	266	$2,560
8342A3	266	$3,474
8342A3K	266	$3,539
8342B3	266	$3,600
8342B3K	266	$3,666
83483	266	$2,675
83483K	266	$2,739
8348A3	266	$3,682
8348A3K	266	$3,747
8348B3	266	$3,881
8348B3K	266	$3,946
8350MR	332	$636
8432SO	332	$576
8693B	339	$5,324
8694B	339	$5,711
8696B	339	$5,849
8697B	339	$6,005
90145	274,299,308	$28
90154	299	$5
90155	299	$5
90225	307	$172
905	329	$754
90J006	347	$107
911085	268	$52
911785	274,299,308	$45
911884	299	$5
911885	299	$5
922VEL	274,299,308	$53
925	329	$562
9301	343	$911
9302	343	$979
9303	343	$1,043
9304	343	$1,167
9305	343	$1,247
9308	344	$347
9309	343	$99
9309H	343	$414
9311	343	$577
9312	343	$641
9313	343	$711
9314	343	$836
9315	343	$919
9319	343	$100
9321	343	$1,432
9322	343	$1,494
9323	343	$1,560
9324	343	$1,686
9325	343	$1,769
9329	343	$681
9329H	343	$944
93316	344	$240
93326	344	$274
93336	344	$302
93346	344	$365
93356	344	$404
9390	344	$470
9391	344	$561
9397	344	$393
9398	344	$171
9413AG	236	$978
9413AGL	236	$1,139
9414AG	236	$862
9429	343	$733
945	329	$210
946	330	$210
947	330	$210
948	330	$210
950	330	$210
9501V	342	$86
9503V	342	$113
9504V	342	$175
9506V	342	$201
9507V	342	$241
9511V	342	$107
955	331	$247
9552	342	$31
971	330	$259
972	331	$346
973	331	$346
992	331	$389
993	329	$235
994	329	$259
995	329	$272
9P600	286	$185
9P610	286	$235
9P620	286	$402
9P810	349	$1,497
A35CH5	258	$130
A7737	324	$12
AB2S36	110	$460
AB3S36	110	$561
AB5S36	110	$676
ABD6642	105	$822
ABD7242	105	$864
ABQ2	110	$286
ABQ5	110	$547
ACASTK	305	$355
ACB4224	106	$344
ACB4824	106	$372
ACD	95,109,120	$172
ACD6024	105	$547
ACD6624	105	$576
ACD7224	105	$604
ACLF30	108	$704
ACLF36	108	$792
ACTB10	112	$1,668
ACTB12	112	$1,994
ACTB18	112	$3,432
ACTB6	112	$951
ACTB8	112	$1,379
ACTR42	112	$671
ADB3	300	$387
ADB4	300	$478
ADB5	300	$584
ADB6	300	$614
ADR2	305	$257
ADR2LAM	305	$314
ADR33	305	$347
ADR33LAM	305	$469
ADR34	305	$387
ADR34LAM	305	$495
ADR35	305	$417
ADR35LAM	305	$509
ADR36	305	$448
ADR36LAM	305	$536
ADRW2K	305	$481
AEC72L	106	$965
AEC72R	106	$965
AFF20	107	$547
AFF26	107	$619
AFLF30	108	$936
AFLF36	108	$1,007
AFTP60	110,121	$156
AFTP66	110,121	$172
AFTP72	110,121	$201
AGDC	11	$936
AHG72	109	$1,007
AHPM	110	$201
AHW60	109	$633
AHW66	109	$676
AHW72	109	$720
AITB3G2	278	$6,867
AITB3L2	278	$5,504
AL	231	$636
ALC	111	$1,297
ALCT	112,122	$517
AMDV	279	$43
AMK20	107	$144
AP3017	304,306	$655
AP3024	304,306	$686
AP3617	304,306	$672
AP3624	304,306	$709
AP4817	304,306	$730
AP4824	304,306	$800
AP6017	304,306	$799
AP6024	304,306	$874
AP7217	304,306	$890
AP7224	304,306	$980
APBBF20	107	$576
APBBF26	107	$647
APBF20	107	$426
APBF26	107	$474
APED1	302	$902
APR6030	106	$570

Index

Model No.	Page	List Price
APST	111	$1,152
APT7236	106	$834
AR36	275	$189
AR3624	106	$359
AR42	275	$205
AR4224	106	$389
AR4824	106	$432
ARC12CB	280	$57
ARC12P	280	$16
ARC15CB	280	$61
ARC15P	280	$21
ARC2412HFK	279	$124
ARC2412ROD105	280	$314
ARC2412ROD120	280	$348
ARC2412ROD60	280	$263
ARC2412ROD75	280	$275
ARC2412ROD90	280	$286
ARC2412ROHF	279	$263
ARC2412ROSLF	279	$263
ARC2412RS	279	$263
ARC2412SLF	279	$63
ARC24403A	276	$1,824
ARC24403EA	277	$1,550
ARC24403ES	277	$1,890
ARC24403S	276	$2,162
ARC2440BTB	281	$102
ARC2440CP	281	$131
ARC2440EP	281	$382
ARC2440WCS	281	$86
ARC24504A	276	$2,149
ARC24504EA	277	$1,670
ARC24504ES	277	$1,949
ARC24504S	276	$2,410
ARC2450BTB	281	$102
ARC2450CP	281	$137
ARC2450EP	281	$394
ARC2450WCS	281	$86
ARC24615A	276	$2,199
ARC24615EA	277	$1,748
ARC24615ES	277	$2,010
ARC24615S	276	$2,476
ARC2461BTB	281	$102
ARC2461CP	281	$146
ARC2461EP	281	$410
ARC2461WCS	281	$86
ARC24726A	276	$2,872
ARC24726EA	277	$2,230
ARC24726ES	277	$2,488
ARC24726S	276	$3,132
ARC2472BTB	281	$102
ARC2472CP	281	$152
ARC2472EP	281	$423
ARC2472WCS	281	$86
ARC24827A	276	$3,259
ARC24827EA	277	$2,500
ARC24827ES	277	$2,787
ARC24827S	276	$3,547
ARC2482BTB	281	$119
ARC2482CP	281	$168
ARC2482EP	281	$476
ARC2482WCS	281	$102
ARC24938A	276	$3,666
ARC24938EA	277	$2,800

Model No.	Page	List Price
ARC24938ES	277	$3,104
ARC24938S	276	$3,980
ARC2493BTB	281	$135
ARC2493CP	281	$193
ARC2493EP	281	$530
ARC2493WCS	281	$119
ARC3015HFK	279	$165
ARC3015ROD105	280	$341
ARC3015ROD120	280	$373
ARC3015ROD60	280	$314
ARC3015ROD75	280	$320
ARC3015ROD90	280	$298
ARC3015ROHF	279	$282
ARC3015ROSLF	279	$300
ARC3015RS	279	$276
ARC3015SLF	279	$79
ARC30403A	276	$2,298
ARC30403EA	277	$1,982
ARC30403ES	277	$2,320
ARC30403S	276	$2,634
ARC3040BTB	281	$102
ARC3040CP	281	$137
ARC3040EP	281	$394
ARC3040WCS	281	$86
ARC30504A	276	$2,474
ARC30504EA	277	$2,010
ARC30504ES	277	$2,388
ARC30504S	276	$2,854
ARC3050BTB	281	$102
ARC3050CP	281	$146
ARC3050EP	281	$410
ARC3050WCS	281	$86
ARC30615A	276	$2,773
ARC30615EA	277	$2,158
ARC30615ES	277	$2,438
ARC30615S	276	$3,053
ARC3061BTB	281	$102
ARC3061CP	281	$153
ARC3061EP	281	$423
ARC3061WCS	281	$86
ARC30726A	276	$3,649
ARC30726EA	277	$2,759
ARC30726ES	277	$3,067
ARC30726S	276	$3,958
ARC3072BTB	281	$102
ARC3072CP	281	$161
ARC3072EP	281	$476
ARC3072WCS	281	$86
ARC30827A	276	$4,048
ARC30827EA	277	$3,094
ARC30827ES	277	$3,433
ARC30827S	276	$4,398
ARC3082BTB	281	$119
ARC3082CP	281	$179
ARC3082EP	281	$492
ARC3082WCS	281	$102
ARC30938A	276	$4,608
ARC30938EA	277	$3,437
ARC30938ES	277	$3,850
ARC30938S	276	$4,954
ARC3093BTB	281	$135
ARC3093CP	281	$207
ARC3093EP	281	$565

Model No.	Page	List Price
ARC3093WCS	281	$119
ARCB24403A	276	$2,169
ARCB24403EA	277	$1,898
ARCB24403ES	277	$2,237
ARCB24403S	276	$2,507
ARCB24504A	276	$2,496
ARCB24504EA	277	$2,018
ARCB24504ES	277	$2,296
ARCB24504S	276	$2,757
ARCB24615A	276	$2,543
ARCB24615EA	277	$2,096
ARCB24615ES	277	$2,359
ARCB24615S	276	$2,824
ARCB24726A	276	$3,310
ARCB24726EA	277	$2,670
ARCB24726ES	277	$2,926
ARCB24726S	276	$3,571
ARCB24827A	276	$3,701
ARCB24827EA	277	$2,940
ARCB24827ES	277	$3,228
ARCB24827S	276	$3,992
ARCB30403A	276	$2,643
ARCB30403EA	277	$2,330
ARCB30403ES	277	$2,667
ARCB30403S	276	$2,981
ARCB30504A	276	$2,823
ARCB30504EA	277	$2,359
ARCB30504ES	277	$2,734
ARCB30504S	276	$3,201
ARCB30615A	276	$3,121
ARCB30615EA	277	$2,505
ARCB30615ES	277	$2,784
ARCB30615S	276	$3,401
ARCB30726A	276	$4,096
ARCB30726EA	277	$3,202
ARCB30726ES	277	$3,509
ARCB30726S	276	$4,402
ARCB30827A	276	$4,488
ARCB30827EA	277	$3,535
ARCB30827ES	277	$3,874
ARCB30827S	276	$4,837
ARCPS2412	279	$152
ARCPS3015	279	$179
ARD6030	105	$604
ARD6630	105	$647
ARD7230	105	$692
ARD7236	105	$749
ARDTC	111	$676
ARRS	111	$228
ARS36	275	$581
ARS42	275	$612
AS36F	274	$186
AS42F	274	$202
ASC	111	$720
AT1	113	$3,153
AT10	114	$5,135
AT11	114	$1,692
AT14	114	$1,810
AT17	115	$6,623
AT18	115	$8,709
AT2	113	$3,711
AT22	115	$3,593
AT24	115	$2,598

Index

Model No.	Page	List Price
AT3	113	$3,035
AT34	116	$2,965
AT35	116	$8,033
AT36	116	$2,985
AT37	116	$4,808
AT39	117	$4,429
AT4	113	$3,460
AT40	117	$5,519
AT5	114	$4,042
ATB3FK	300	$365
ATB4FK	300	$438
ATB5FK	300	$511
ATB6FK	300	$555
AVPB	112,122	$892
AVPM	110	$201
AWG72	109	$709
AWMK	258	$51
B2BB10	229	$841
B2BB2	229	$550
B2BB3	229	$587
B2BB4	229	$623
B2BB5	229	$659
B2BB6	229	$696
B2BB7	229	$732
B2BB8	229	$769
B2BB9	229	$805
B2BBX	229	$605
B3BB10	229	$904
B3BB2	229	$613
B3BB3	229	$649
B3BB4	229	$685
B3BB5	229	$722
B3BB6	229	$758
B3BB7	229	$795
B3BB8	229	$831
B3BB9	229	$867
B3BBX	229	$674
BC3629	162	$555
BC3642	162	$692
BC3668	1621	$963
BR2448	160	$398
BT1	123	$2,306
BT10	124	$1,976
BT12	124	$1,447
BT19	125	$1,320
BT2	123	$1,867
BT20	125	$1,337
BT21	125	$1,641
BT23	125	$2,467
BT24	126	$4,944
BT25	126	$4,397
BT26	126	$4,633
BT27	126	$1,207
BT28	127	$1,967
BT31	127	$5,271
BT32	127	$3,535
BT4	123	$2,671
BT5	123	$2,927
BT7	124	$3,586
BT9	124	$5,479
BTB3624	118	$190
BTB3S36	121	$399
BTB4224	118	$211
BTB4824	118	$232
BTB4S36	121	$494
BTB5S36	121	$595
BTBBF20M	119	$464
BTBD7239	118	$538
BTBF20	119	$346
BTCD6024	118	$356
BTCD6624	118	$378
BTCD7224	118	$405
BTCT10	122	$1,074
BTCT6	122	$493
BTCT8	122	$774
BTCTR48	122	$412
BTDHG72	120	$826
BTFF20M	119	$415
BTFLF36	119	$803
BTGDC	121	$698
BTHW60	120	$563
BTHW66	120	$597
BTHW72	120	$624
BTPM	120	$165
BTPT7236	119	$700
BTR3624	118	$238
BTR4224	118	$258
BTR4824	118	$274
BTRD6030	118	$395
BTRD6630	118	$420
BTRD7230	118	$458
BTRD7236	118	$517
BTRDTC	122	$344
BTRRS2	122	$140
BTSC	121	$420
C1131	55	$1,167
C1131N	55	$1,123
C1133	55	$1,167
C1133N	55	$1,123
C1136	55	$703
C1136N	55	$661
C1141	55	$1,187
C1141N	55	$1,145
C1142	56	$1,678
C1142N	56	$1,635
C1143	55	$1,187
C1143N	55	$1,145
C1144	56	$1,678
C1144N	56	$1,635
C1145	56	$1,678
C1145N	56	$1,635
C1146	55	$746
C1146N	55	$703
C1151	55	$1,214
C1151N	55	$1,165
C1152	56	$1,705
C1152N	56	$1,662
C1153	55	$1,214
C1153N	55	$1,165
C1154	56	$1,705
C1154N	56	$1,662
C1155	56	$1,705
C1155N	56	$1,662
C1156	55	$759
C1156N	55	$709
C1161	55	$1,252
C1161N	55	$1,203
C1162	56	$1,742
C1162N	56	$1,686
C1163	55	$1,252
C1163N	55	$1,203
C1164	56	$1,742
C1164N	56	$1,686
C1165	56	$1,742
C1165N	56	$1,686
C1166	55	$787
C1166N	55	$737
C1171	55	$1,288
C1171N	55	$1,239
C1172	56	$1,779
C1172N	56	$1,723
C1173	55	$1,288
C1173N	55	$1,239
C1174	56	$1,779
C1174N	56	$1,723
C1175	56	$1,779
C1175N	56	$1,723
C1176	55	$816
C1176N	55	$766
C1331	50	$1,200
C1331N	50	$1,142
C1333	50	$1,200
C1333N	50	$1,142
C1336	50	$720
C1336N	50	$664
C1341	50	$1,214
C1341N	50	$1,158
C1342	51	$1,720
C1342N	51	$1,664
C1343	50	$1,214
C1343N	50	$1,158
C1344	51	$1,720
C1344N	51	$1,664
C1345	51	$1,720
C1345N	51	$1,664
C1346	50	$746
C1346N	50	$689
C1351	50	$1,256
C1351N	50	$1,191
C1352	51	$1,761
C1352N	51	$1,696
C1353	50	$1,256
C1353N	50	$1,191
C1354	51	$1,761
C1354N	51	$1,696
C1355	51	$1,761
C1355N	51	$1,696
C1356	50	$776
C1356N	50	$713
C1361	50	$1,294
C1361N	50	$1,224
C1362	51	$1,799
C1362N	51	$1,728
C1363	50	$1,294
C1363N	50	$1,224
C1364	51	$1,799
C1364N	51	$1,728
C1365	51	$1,799
C1365N	51	$1,728

Index

Model No.	Page	List Price
C1366	50	$818
C1366N	50	$749
C1371	50	$1,309
C1371N	50	$1,238
C1372	51	$1,814
C1372N	51	$1,743
C1373	50	$1,309
C1373N	50	$1,238
C1374	51	$1,814
C1374N	51	$1,743
C1375	51	$1,814
C1375N	51	$1,743
C1376	50	$833
C1376N	50	$762
C1651	51	$1,277
C1651N	51	$1,214
C1652	51	$1,806
C1652N	51	$1,743
C1653	51	$1,277
C1653N	51	$1,214
C1654	51	$1,806
C1654N	51	$1,743
C1655	51	$1,806
C1655N	51	$1,743
C1656	51	$847
C1656N	51	$784
C1661	51	$1,305
C1661N	51	$1,236
C1662	51	$1,834
C1662N	51	$1,763
C1663	51	$1,305
C1663N	51	$1,236
C1664	51	$1,834
C1664N	51	$1,763
C1665	51	$1,834
C1665N	51	$1,763
C1666	51	$873
C1666N	51	$803
C1671	51	$1,352
C1671N	51	$1,283
C1672	51	$1,882
C1672N	51	$1,811
C1673	51	$1,352
C1673N	51	$1,283
C1674	51	$1,882
C1674N	51	$1,811
C1675	51	$1,882
C1675N	51	$1,811
C1676	51	$899
C1676N	51	$827
C1951	52	$1,399
C1951N	52	$1,337
C1952	52	$1,927
C1952N	52	$1,863
C1953	52	$1,399
C1953N	52	$1,337
C1954	52	$1,927
C1954N	52	$1,863
C1955	52	$1,927
C1955N	52	$1,863
C1956	52	$902
C1956N	52	$839
C1961	52	$1,454
C1961N	52	$1,384
C1962	52	$1,980
C1962N	52	$1,910
C1963	52	$1,454
C1963N	52	$1,384
C1964	52	$1,980
C1964N	52	$1,910
C1965	52	$1,980
C1965N	52	$1,910
C1966	52	$957
C1966N	52	$889
C1971	52	$1,480
C1971N	52	$1,409
C1972	52	$2,007
C1972N	52	$1,937
C1973	52	$1,480
C1973N	52	$1,409
C1974	52	$2,007
C1974N	52	$1,937
C1975	52	$2,007
C1975N	52	$1,937
C1976	52	$986
C1976N	52	$918
C1BB10	228	$1,009
C1BB2	13,228	$718
C1BB3	228	$754
C1BB4	228	$790
C1BB5	228	$827
C1BB6	228	$863
C1BB7	228	$900
C1BB8	228	$936
C1BB9	228	$972
C1BBX	228	$789
C1BU10	228	$1,294
C1BU2	228	$966
C1BU3	228	$1,044
C1BU4	228	$1,075
C1BU5	228	$1,112
C1BU6	228	$1,148
C1BU7	228	$1,185
C1BU8	228	$1,221
C1BU9	228	$1,263
C1BUX	228	$1,063
C1CU10	228	$1,372
C1CU2	228	$1,044
C1CU3	228	$1,122
C1CU4	228	$1,153
C1CU5	228	$1,190
C1CU6	228	$1,226
C1CU7	228	$1,263
C1CU8	228	$1,299
C1CU9	228	$1,341
C1CUX	228	$1,148
C1CB2	228	$873
C1CB3	228	$909
C1CB4	228	$945
C1CB5	228	$982
C1CB6	228	$1,018
C1CB7	228	$1,055
C1CB8	228	$1,091
C1CB9	228	$1,127
C1CBX	228	$960
C2401	54	$949
C2401N	54	$900
C2403	54	$949
C2403N	54	$900
C2406	53	$485
C2406N	53	$437
C2411	54	$980
C2411N	54	$930
C2413	54	$980
C2413N	54	$930
C2416	53	$517
C2416N	53	$469
C2421	54	$1,021
C2421N	54	$966
C2423	54	$1,021
C2423N	54	$966
C2426	53	$552
C2426N	53	$495
C2431	54	$1,062
C2431N	54	$1,004
C2433	54	$1,062
C2433N	54	$1,004
C2436	53	$590
C2436N	53	$535
C2441	54	$1,116
C2441N	54	$1,059
C2443	54	$1,116
C2443N	54	$1,059
C2446	53	$679
C2446N	53	$623
C2451	54	$1,174
C2451N	54	$1,096
C2453	54	$1,174
C2453N	54	$1,096
C2456	53	$709
C2456N	53	$633
C2461	54	$1,214
C2461N	54	$1,137
C2463	54	$1,214
C2463N	54	$1,137
C2466	53	$759
C2466N	53	$681
C2471	54	$1,253
C2471N	54	$1,175
C2473	54	$1,253
C2473N	54	$1,175
C2476	53	$790
C2476N	53	$713
C2481	54	$919
C2481N	54	$869
C2483	54	$919
C2483N	54	$869
C2486	53	$462
C2486N	53	$414
C2501	54	$1,009
C2501N	54	$959
C2503	54	$1,009
C2503N	54	$959
C2506	54	$540
C2506N	54	$492
C2511	54	$1,040
C2511N	54	$991
C2513	54	$1,040
C2513N	54	$991

Index

Model No.	Page	List Price
C2516	54	$581
C2516N	54	$532
C2521	54	$1,084
C2521N	54	$1,026
C2523	54	$1,084
C2523N	54	$1,026
C2526	54	$605
C2526N	54	$550
C2531	54	$1,120
C2531N	54	$1,065
C2533	54	$1,120
C2533N	54	$1,065
C2536	54	$647
C2536N	54	$589
C2541	54	$1,209
C2541N	54	$1,154
C2543	54	$1,209
C2543N	54	$1,154
C2546	54	$746
C2546N	54	$689
C2551	54	$1,248
C2551N	54	$1,171
C2553	54	$1,248
C2553N	54	$1,171
C2556	54	$773
C2556N	54	$697
C2561	54	$1,294
C2561N	54	$1,217
C2563	54	$1,294
C2563N	54	$1,217
C2566	54	$808
C2566N	54	$732
C2571	54	$1,375
C2571N	54	$1,297
C2573	54	$1,375
C2573N	54	$1,297
C2576	54	$887
C2576N	54	$808
C2581	54	$976
C2581N	54	$927
C2583	54	$976
C2583N	54	$927
C2586	54	$508
C2586N	54	$459
C281N	53	$336
C281S	52	$356
C281T	52	$364
C282N	53	$349
C282S	52	$375
C282T	52	$384
C283N	53	$369
C283S	52	$396
C283T	52	$403
C291N	53	$349
C291S	53	$370
C291T	53	$375
C292N	53	$366
C292S	53	$392
C292T	53	$397
C293N	53	$385
C293S	53	$413
C293T	53	$419
C2BB10	228	$931
C2BB2	228	$640
C2BB3	228	$676
C2BB4	228	$712
C2BB5	228	$749
C2BB6	228	$785
C2BB7	228	$822
C2BB8	228	$858
C2BB9	228	$894
C2BBX	228	$704
C2BU10	228	$1,216
C2BU2	228	$888
C2BU3	228	$966
C2BU4	228	$997
C2BU5	228	$1,034
C2BU6	228	$1,070
C2BU7	228	$1,107
C2BU8	228	$1,143
C2BU9	228	$1,185
C2BUX	228	$977
C2CB10	228	$1,086
C2CB2	228	$795
C2CB3	228	$831
C2CB4	228	$867
C2CB5	228	$904
C2CB6	228	$940
C2CB7	228	$977
C2CB8	228	$1,013
C2CB9	228	$1,049
C2CBX	228	$874
C2CU10	228	$1,294
C2CU2	228	$966
C2CU3	228	$1,044
C2CU4	228	$1,075
C2CU5	228	$1,112
C2CU6	228	$1,148
C2CU7	228	$1,185
C2CU8	228	$1,221
C2CU9	228	$1,263
C2CUX	228	$1,063
C313L1	57	$1,677
C313L1N	57	$1,593
C313L3	57	$1,677
C313L3N	57	$1,593
C313L6	57	$1,319
C313L6N	57	$1,234
C313R1	57	$1,677
C313R1N	57	$1,593
C313R3	57	$1,677
C313R3N	57	$1,593
C313R6	57	$1,319
C313R6N	57	$1,234
C343L1	57	$1,677
C343L1N	57	$1,593
C343L3	57	$1,677
C343L3N	57	$1,593
C343L6	57	$1,319
C343L6N	57	$1,234
C343R1	57	$1,677
C343R1N	57	$1,593
C343R3	57	$1,677
C343R3N	57	$1,593
C343R6	57	$1,319
C343R6N	57	$1,234
C36A	53	$2,037
C36T	56	$1,237
C36TR	56	$1,089
C413L	58	$1,333
C413LN	58	$1,249
C413R	58	$1,333
C413RN	58	$1,249
C42A	53	$2,053
C483L	58	$1,333
C483LN	58	$1,234
C483R	58	$1,333
C483RN	58	$1,234
C48A	53	$2,134
C48T	56	$1,340
C48TR	56	$1,190
C515	56	$699
C523	56	$670
C542	55	$1,133
C542N	55	$1,062
C552	55	$1,157
C552N	55	$1,087
C583	55	$1,217
C583N	55	$1,062
C593	55	$1,240
C593N	55	$1,157
C625	57	$1,224
C626	57	$1,453
C627	57	$1,487
C673	57	$667
C685	57	$728
C687	57	$783
C7421	59	$782
C743	59	$841
C745	59	$1,038
C746	59	$1,094
C747	59	$1,156
C7621	59	$962
C763	59	$1,187
C765	59	$1,386
C766	59	$1,442
C767	59	$1,503
C7721	59	$526
C773	59	$554
C775	59	$597
C777	59	$655
C810	62	$466
C811	62	$488
C812	62	$500
C813	62	$512
C818	62	$456
C819	62	$478
C820	62	$567
C821	62	$611
C822	62	$631
C823	62	$641
C828	62	$553
C829	62	$582
C8621	60	$281
C863	60	$285
C865	60	$315
C866	60	$330
C867	60	$358
C8817B	60, 70, 75, 318	$596

Index

Model No.	Page	List Price
C8817F	60, 70, 75, 318	$596
C8817M	60, 70, 75, 318	$83
C8824B	60	$617
C8824F	60	$617
C8824M	60	$86
C8830B	60	$636
C8830F	60	$636
C8830M	60	$90
C88MKEYH	60	$16
C893	58	$227
C894	44, 59, 80	$318
C9111	63	$53
C9112	63	$70
C9113	63	$90
C9211	63	$57
C9212	63	$76
C9213	63	$92
C9311	63	$65
C9312	63	$84
C9313	63	$100
C9411	63	$72
C9412	63	$92
C9413	63	$111
C9512	63	$100
C9513	63	$120
C9517	63	$147
CA2PHHK	217	$1,405
CA2PHHR	217	$1,405
CA2PHHT	217	$1,405
CA2PHT	217	$1,177
CA2PLHK	217	$1,355
CA2PLHR	217	$1,355
CA2PLHT	217	$1,355
CA2PLT	217	$1,151
CA30RHBHK	217	$647
CA30RHBHR	217	$647
CA30RHBHT	217	$647
CA30RHBT	217	$414
CA30RLBHK	217	$632
CA30RLBHR	217	$632
CA30RLBHT	217	$632
CA30RLBT	217	$402
CA30RLSHK	218	$762
CA30RLSHR	218	$762
CA30RLSHT	218	$762
CA30RLST	218	$505
CA30SHBHK	217	$646
CA30SHBHR	217	$646
CA30SHBHT	217	$646
CA30SHBT	217	$415
CA30SHSHK	218	$776
CA30SHSHR	218	$776
CA30SHSHT	218	$776
CA30SHST	218	$518
CA30SLBHK	217	$631
CA30SLBHR	217	$631
CA30SLBHT	217	$631
CA30SLBT	217	$404
CA30SLSHK	218	$762
CA30SLSHR	218	$762
CA30SLSHT	218	$762
CA30SLST	218	$505
CA36RHBHK	217	$743
CA36RHBHR	217	$743
CA36RHBHT	217	$743
CA36RHBT	217	$468
CA36RHSHK	218	$872
CA36RHSHR	218	$872
CA36RHSHT	218	$872
CA36RHST	218	$573
CA36RLBHK	217	$729
CA36RLBHR	217	$729
CA36RLBHT	217	$729
CA36RLBT	217	$457
CA36RLSHK	218	$859
CA36RLSHR	218	$859
CA36RLSHT	218	$859
CA36RLST	218	$560
CA36SHBHK	217	$742
CA36SHBHR	217	$742
CA36SHBHT	217	$742
CA36SHBT	217	$469
CA36SHSHK	218	$872
CA36SHSHR	218	$872
CA36SHSHT	218	$872
CA36SHST	218	$573
CA36SLBHK	217	$728
CA36SLBHR	217	$728
CA36SLBHT	217	$728
CA36SLBT	217	$458
CA36SLSHK	218	$859
CA36SLSHR	218	$859
CA36SLSHT	218	$859
CA36SLST	218	$560
CA3PHHK	218	$1,849
CA3PHHR	218	$1,849
CA3PHHT	218	$1,849
CA3PHT	218	$1,479
CA3PLHK	218	$1,627
CA3PLHR	218	$1,627
CA3PLHT	218	$1,627
CA3PLT	218	$1,295
CA42RHBHK	217	$810
CA42RHBHR	217	$810
CA42RHBHT	217	$810
CA42RHBT	217	$647
CA42RHSHK	218	$939
CA42RHSHR	218	$939
CA42RHSHT	218	$939
CA42RHST	218	$750
CA42RLBHK	217	$797
CA42RLBHR	217	$797
CA42RLBHT	217	$797
CA42RLBT	217	$632
CA42RLSHK	218	$926
CA42RLSHR	218	$926
CA42RLSHT	218	$926
CA42RLST	218	$737
CAFR18B	217	$243
CBBFC	130, 132	$704
CBBFD	130, 132	$853
CBDG	129	$577
CCD	130	$245
CCNZ72	128	$1,175
CD1	163	$103
CD72	128	$1,897
CDS72	128, 131	$1,733
CFFC	130, 132	$692
CFFD	130, 132	$824
CH48T	304	$3,224
CH48TLAM	304	$3,453
CH60T	304	$3,276
CH60TLAM	304	$3,525
CH72T	304	$3,500
CH72TLAM	304	$3,780
CHAIRGL	227	$34
CHG63	140	$1,665
CHG72	129, 140	$1,775
CHW63	140	$1,665
CHW72	129, 140	$1,775
CL15	58	$122
CL24	58	$154
CL30	58	$162
CL48T	304	$2,957
CL48TLAM	304	$3,184
CL60T	304	$3,039
CL60TLAM	304	$3,288
CL72T	304	$3,299
CL72TLAM	304	$3,580
CLCK1	60	$36
CLCK2	60	$36
CLCK3	60	$36
CLCK4	60	$36
CLCK5	60	$36
CLF	130, 132	$1,271
CMT12	133	$5,725
CMT14	133	$6,377
CMT18	133	$8,337
CMT20	133	$9,219
CMT24	133	$11,279
CMT26	133	$12,160
CMT30	133	$14,222
CP3	164, 179	$18
CP6	164, 179	$18
CPC	128	$1,187
CQ4848S	194	$1,747
CQ5454S	194	$1,872
CQ6060D	194	$2,288
CR2072	160	$701
CRC72	131	$693
CRS48	131	$332
CRTNL	129, 131	$753
CRTNR	129, 131	$753
CS	231	$827
CS2RC	64	$883
CS2RS30	64	$420
CS2RS78	64	$588
CST1	66	$7,663
CST10	68	$3,011
CST14	68	$5,915
CST18	68	$3,328
CST19	69	$5,289
CST2	66	$4,356
CST24	69	$3,989
CST3	66	$5,153
CST4	66	$4,525
CST5	67	$4,666
CST6	67	$12,229
CST7	67	$3,661

Index

Model No.	Page	List Price
CST8	67	$4,311
CST9	68	$3,152
CT10	137	$4,440
CT11	137	$4,276
CT15	137	$4,662
CT16	137	$4,831
CT19	138	$5,157
CT2	136	$7,285
CT26	138	$8,422
CT28	138	$8,258
CT3672	162	$1,531
CT4	136	$7,121
CT48120	162	$2,379
CT48144	162	$2,849
CT4896	162	$1,947
CT6	136	$7,454
CT8	136	$7,290
CTC120	133	$3,398
CTC72	133	$1,603
CTC84	133	$1,896
CTC96	133	$2,357
CTMB	133, 143, 163, 173	$1,467
CTR	182	$889
CTRND	133	$877
CTS	182	$629
CTS36	304	$175
CTS60	304	$211
CTS72	304	$229
CTSK1	95 110, 120, 129,	$144
	140, 152, 164, 173	$144
CX4848D	194	$1,238
CX5454D	194	$1,456
CY3672B	195	$1,430
CY3672R	195	$1,430
CY4284B	195	$1,742
CY4284R	195	$1,742
CY4296B	195	$1,976
CY4296R	195	$1,976
CY48108B	195	$2,527
CY48108R	195	$2,527
CY48120B	195	$3,099
CY48120R	195	$3,099
CY4896B	195	$2,288
CY4896R	195	$2,288
CY54108B	195	$3,110
CY54108R	195	$3,110
CY54120B	195	$4,139
CY54120R	195	$4,139
CY54144B	195	$4,857
CY54144R	195	$4,857
CY54216B	195	$7,259
CY54216R	195	$7,259
CY5496B	195	$3,026
CY5496R	195	$3,026
D09GS03	270, 274	$61
D09GS10	270, 274	$200
D100	284	$175
D200	284	$311
D300	284	$162
D400	284	$243
D500	284	$78
D7260A	341	$259
D7261A	341	$277

Model No.	Page	List Price
D7261ASE	341	$431
D7262A	341	$293
D7262ASE	341	$444
D7263A	341	$309
D7263ASE	341	$461
D7265A	341	$372
D7265ASE	341	$541
D7270A	340	$362
D7271A	340	$378
D7271ASE	340	$500
D7272A	340	$393
D7272ASE	340	$514
D7273A	340	$441
D7273ASE	340	$534
D7275A	340	$581
D7275ASE	340	$733
DAD3G	283	$249
DAD3L	283	$183
DAD4G	283	$290
DAD4L	283	$216
DAD5G	283	$322
DAD5L	283	$249
DAD6G	283	$371
DAD6L	283	$284
DAD7G	283	$371
DAD7L	283	$322
DAD8G	283	$464
DAD8L	283	$349
DBDK3672	165	$2,565
DFB3665	284	$405
DFB3676	284	$464
DFB3686	284	$512
DFB3697	284	$552
DFB4265	284	$451
DFB4276	284	$512
DFB4286	284	$566
DFB4297	284	$613
DFB4865	284	$478
DFB4876	284	$558
DFB4886	284	$606
DFB4897	284	$652
DFU1265	283	$183
DFU1276	283	$216
DFU1286	283	$236
DFU1297	283	$257
DFU1565	283	$243
DFU1576	283	$257
DFU1586	283	$284
DFU1597	283	$303
DFU2465	283	$284
DFU2476	283	$322
DFU2486	283	$322
DFU2497	283	$378
DFU3065	283	$371
DFU3076	283	$424
DFU3086	283	$464
DFU3097	283	$512
DK3672	159	$1,261
DKS3672	159	$1,250
DME1265F	284	$183
DME1276F	284	$216
DME1286F	284	$236
DME1297F	284	$257

Model No.	Page	List Price
DME1565F	284	$243
DME1576F	284	$257
DME1586F	284	$284
DME1597F	284	$303
DME1865F	284	$260
DME1865M	285	$263
DME1876F	284	$293
DME1876M	285	$295
DME1886F	284	$320
DME1886M	285	$322
DME1897F	284	$346
DME1897M	285	$349
DME2465F	284	$284
DME2465M	285	$284
DME2476F	284	$322
DME2476M	285	$322
DME2486F	284	$349
DME2486M	285	$349
DME2497F	284	$378
DME2497M	285	$378
DME3065F	284	$371
DME3065M	285	$371
DME3076F	284	$424
DME3076M	285	$424
DME3086F	284	$464
DME3086M	285	$464
DME3097F	284	$512
DME3097M	285	$512
DME3665F	284	$400
DME3665M	285	$405
DME3676F	284	$460
DME3676M	285	$464
DME3686F	284	$506
DME3686M	285	$506
DME3697F	284	$547
DME3697M	285	$547
DR2	308	$124
E5K1	10	$1,717
E5K10	11	$2,772
E5K11	12	$2,838
E5K12	12	$2,888
E5K13	12	$3,032
E5K14	12	$3,198
E5K15	12	$3,264
E5K16	12	$3,884
E5K2	10	$1,842
E5K3	10	$2,036
E5K4	10	$2,153
E5K5	11	$2,346
E5K6	11	$2,269
E5K7	11	$2,412
E5K8	11	$2,462
E5K9	11	$2,579
E5LAT	13	$996
E5OH	13	$426
E5OPEN	13	$686
E5PED	13	$620
E5TOP	13	$730
EC48FB	43,209	$542
EC48FS	43,209	$542
EC48UB	43	$408
EC48UDB	43	$442
EC54FB	209	$542

Index

Model No.	Page	List Price
EC54FS	209	$542
EC54UB	209	$408
EC60FB	43,209	$542
EC60FDB	43	$571
EC60FDS	43	$571
EC60FS	209	$542
EC60UB	43	$408
EC60UDB	43	$442
EC66FB	209	$542
EC66FS	209	$542
EC66UB	209	$408
EC72FB	209	$542
EC72FDB	43	$571
EC72FDS	43	$571
EC72FS	43,209	$542
EC72UB	43	$408
EC72UDB	43	$442
ECB	43,209	$255
ECG	44,209	$99
ECH	43,209	$173
ECS	43,209	$267
ECX	44,209	$93
EF0943L	253	$79
EF0943OP	253	$70
EF0943T	253	$125
EF0965L	253	$79
EF0965OP	253	$70
EF0965T	253	$125
EF0976L	253	$90
EF0976OP	253	$79
EF0976T	253	$137
EF0986L	253	$94
EF0986OP	253	$79
EF0986T	253	$140
EF0997L	253	$106
EF0997OP	253	$79
EF0997T	253	$152
EF1243L	253	$79
EF1243OP	253	$71
EF1243T	253	$128
EF1265L	253	$79
EF1265OP	253	$71
EF1265T	253	$128
EF1276L	253	$90
EF1276OP	253	$80
EF1276T	253	$140
EF1286L	253	$94
EF1286OP	253	$80
EF1286T	253	$154
EF1297L	253	$106
EF1297OP	253	$80
EF1297T	253	$167
EF1543L	253	$83
EF1543OP	253	$73
EF1543T	253	$136
EF1565L	253	$83
EF1565OP	253	$73
EF1565T	253	$136
EF1576L	253	$92
EF1576OP	253	$85
EF1576T	253	$148
EF1586L	253	$100
EF1586OP	253	$85

Model No.	Page	List Price
EF1586T	253	$161
EF1597L	253	$109
EF1597OP	253	$85
EF1597T	253	$174
EF1843L	253	$89
EF1843OP	253	$94
EF1843T	253	$158
EF1865L	253	$99
EF1865OP	253	$94
EF1865T	253	$171
EF1876L	253	$104
EF1876OP	253	$93
EF1876T	253	$191
EF1886L	253	$131
EF1886OP	253	$98
EF1886T	253	$199
EF1897L	253	$142
EF1897OP	253	$98
EF1897T	253	$212
EF2402KP	256	$18
EF2406KP	256	$32
EF2409S	254	$30
EF2409S18GA	255	$48
EF2409U	254	$30
EF2409U18GA	244	$45
EF2411SS	256	$12
EF2411SSB	256,265	$18
EF2411SSPT	256	$19
EF2412S	254	$25
EF2412S18GA	255	$54
EF2412U	254	$25
EF2412U18GA	255	$49
EF2414SS	256	$12
EF2414SSB	256,265	$12
EF2414SSPT	256	$19
EF2414WSSS	257	$22
EF2415S	254	$28
EF2415S18GA	255	$55
EF2415U	254	$28
EF2415U18GA	255	$51
EF2418S	254	$46
EF2418S18GA	255	$56
EF2418U	254	$38
EF2418U18GA	255,264	$53
EF2424S	254	$46
EF2424S18GA	255	$113
EF2424U	254	$43
EF2424U18GA	255	$89
EF2430S	254	$51
EF2430S18GA	255	$116
EF2430U	254	$49
EF2430U18GA	255	$92
EF2436U18GA	255,264	$106
EF2443BP	258	$214
EF2443CP	258	$217
EF2443L	253	$94
EF2443OP	253	$94
EF2443T	253	$165
EF2465BP	258	$239
EF2465CP	258	$236
EF2465L	253	$103
EF2465OP	253	$94
EF2465T	253	$175

Model No.	Page	List Price
EF2476BP	258	$245
EF2476CP	258	$241
EF2476L	253	$121
EF2476OP	253	$95
EF2476T	253	$193
EF2486BP	258	$245
EF2486CP	258	$250
EF2486L	253	$135
EF2486OP	253	$98
EF2486T	253	$207
EF2497BP	258	$297
EF2497CP	258	$272
EF2497L	253	$150
EF2497OP	253	$98
EF2497T	253	$220
EF24CS	255,265	$9
EF24RS	256	$222
EF24WSB	257	$28
EF3002KP	256	$21
EF3006KP	256	$37
EF3009S	254	$30
EF3009S18GA	255	$49
EF3009U	254	$30
EF3009U18GA	255	$47
EF3011SS	255	$11
EF3011SSB	256,265	$18
EF3011SSPT	256	$19
EF3012S	254	$25
EF3012S18GA	255	$55
EF3012U	254	$25
EF3012U18GA	255	$52
EF3014SS	256	$12
EF3014SSB	256,265	$12
EF3014SSPT	256	$19
EF3014WSSS	257	$22
EF3015S	254	$28
EF3015S18GA	255	$56
EF3015U	254	$28
EF3015U18GA	255	$56
EF3018S	254	$46
EF3018S18GA	255	$57
EF3018U	254	$43
EF3018U18GA	255	$56
EF3024S	254	$46
EF3024S18GA	255	$116
EF3024U	254	$45
EF3024U18GA	255	$113
EF3030S	254	$51
EF3030S18GA	255	$119
EF3030U	254	$51
EF3030U18GA	255	$116
EF3036U18GA	255,264	$119
EF3043BP	258	$217
EF3043CP	258	$223
EF3043L	253	$109
EF3043OP	253	$97
EF3043T	253	$191
EF3065BP	258	$241
EF3065CP	258	$241
EF3065L	253	$126
EF3065OP	253	$97
EF3065T	253	$207
EF3076BP	258	$248

Index

Model No.	Page	List Price
EF3076CP	258	$248
EF3076L	253	$154
EF3076OP	253	$110
EF3076T	253	$234
EF3086BP	258	$257
EF3086CP	258	$257
EF3086L	253	$163
EF3086OP	253	$104
EF3086T	253	$246
EF3097BP	258	$303
EF3097CP	258	$303
EF3097L	253	$172
EF3097OP	253	$104
EF3097T	253	$260
EF30CS	255,265	$9
EF30RS	256	$236
EF30WSB	257	$28
EF3602KP	256	$21
EF3606KP	256	$37
EF3609S	254	$30
EF3609S18GA	255	$49
EF3609U	254	$30
EF3609U18GA	255	$47
EF3611SS	256	$12
EF3611SSB	256,265	$18
EF3611SSPT	256	$19
EF3612S	254	$25
EF3612S18GA	255	$55
EF3612U	254	$28
EF3612U18GA	255	$55
EF3614SS	256	$12
EF3614SSB	256,265	$12
EF3614SSPT	256	$19
EF3614WSSS	257	$22
EF3615S	254	$28
EF3615S18GA	255	$56
EF3615U	254	$32
EF3615U18GA	255	$56
EF3618S	254	$46
EF3618S18GA	255	$61
EF3618U	254	$43
EF3618U18GA	255	$61
EF3624S	254	$46
EF3624S18GA	255	$116
EF3624U	254	$45
EF3624U18GA	255	$116
EF3630S	254	$51
EF3630S18GA	255	$119
EF3630U	255	$51
EF3630U18GA	255	$119
EF3636U18GA	255,264	$121
EF3643BP	258	$218
EF3643CP	258	$223
EF3665BP	258	$241
EF3665CP	258	$241
EF3676BP	258	$248
EF3676CP	258	$248
EF3686BP	258	$257
EF3686CP	258	$257
EF3697BP	258	$303
EF3697CP	258	$303
EF36CS	255,265	$9
EF36RS	256	$250
EF36WSB	257	$29
EF4202KP	256	$27
EF4206KP	256	$40
EF4209S	254	$33
EF4209S18GA	255	$56
EF4209U	254	$30
EF4209U18GA	255	$52
EF4211SS	256	$12
EF4211SSB	256,265	$18
EF4211SSPT	256	$19
EF4211WSSS	257	$22
EF4212S	254	$30
EF4212S18GA	255	$58
EF4212U	254	$30
EF4212U18GA	255	$57
EF4214SSB	256	$12
EF4215S	254	$38
EF4215S18GA	255	$61
EF4215U	254	$37
EF4215U18GA	255	$58
EF4218S	254	$52
EF4218S18GA	255	$63
EF4218U	254	$46
EF4218U18GA	255,264	$61
EF4224S	254	$57
EF4224S18GA	255	$120
EF4224U	254	$52
EF4224U18GA	255	$118
EF4230S	254	$64
EF4230S18GA	255	$121
EF4230U	254	$61
EF4230U18GA	255	$119
EF4236U18GA	255,264	$121
EF4243BP	259	$220
EF4243CP	258	$229
EF4265BP	258	$248
EF4265CP	258	$248
EF4276BP	258	$253
EF4276CP	258	$253
EF4286BP	258	$280
EF4286CP	258	$280
EF4297BP	258	$343
EF4297CP	258	$343
EF42CS	255,265	$10
EF42RS	256	$263
EF42WSB	257	$33
EF4802KP	256	$28
EF4806KP	256	$45
EF4809S	254	$38
EF4809S18GA	255	$58
EF4809U	254	$37
EF4809U18GA	255	$54
EF4811SS	256	$16
EF4811SSB	256,265	$18
EF4811SSPT	256	$19
EF4811WSSS	257	$22
EF4812S	257	$38
EF4812S18GA	255	$61
EF4812U	254	$34
EF4812U18GA	255	$61
EF4814SSB	256,265	$12
EF4815S	254	$45
EF4815S18GA	255	$62
EF4815U	254	$41
EF4815U18GA	255	$62
EF4818S	254	$57
EF4818S18GA	255	$64
EF4818U	254	$53
EF4818U18GA	255,264	$58
EF4824S	254	$67
EF4824S18GA	255	$122
EF4824U	254	$56
EF4824U18GA	255	$120
EF4830S	254	$72
EF4830S18GA	255	$124
EF4830U	254	$63
EF4830U18GA	255	$119
EF4836U18GA	255,264	$121
EF4843BP	258	$231
EF4843CP	258	$232
EF4865BP	258	$250
EF4865CP	258	$250
EF4876BP	258	$271
EF4876CP	258	$271
EF4886BP	258	$303
EF4886CP	258	$303
EF4897BP	258	$356
EF4897CP	258	$356
EF48CS	255,265	$10
EF48RS	256	$276
EF48WSB	257	$33
EFL2409433S	248	$407
EFL2409656S	249	$590
EFL2409767S	250	$687
EFL2409868S	251	$758
EFL2409979S	252	$783
EFL2412433S	248	$381
EFL2412656S	249	$555
EFL2412767S	250	$646
EFL2412868S	251	$701
EFL2412979S	252	$796
EFL2415433S	248	$401
EFL2415656S	249	$584
EFL2415767S	250	$663
EFL2415868S	251	$752
EFL2415979S	252	$833
EFL2418433S	248	$498
EFL2418656S	249	$776
EFL2418767S	250	$883
EFL2418868S	251	$1,024
EFL2418979S	252	$1,135
EFL2424433S	248	$525
EFL2424656S	249	$813
EFL2424767S	250	$950
EFL2424868S	251	$1,070
EFL2424979S	252	$1,191
EFL2430433S	248	$585
EFL2430656S	249	$925
EFL2430767S	250	$1,081
EFL2430868S	251	$1,199
EFL2430979S	252	$1,257
EFL3009433S	248	$407
EFL3009656S	249	$590
EFL3009767S	250	$687
EFL3009868S	251	$758
EFL3009979S	252	$848

Index

Model No.	Page	List Price
EFL3012433S	248	$381
EFL3012656S	249	$555
EFL3012767S	250	$646
EFL3012868S	251	$701
EFL3012979S	252	$796
EFL3015433S	248	$401
EFL3015656S	249	$584
EFL3015767S	250	$663
EFL3015868S	251	$752
EFL3015979S	252	$833
EFL3018433S	248	$503
EFL3018656S	249	$781
EFL3018767S	250	$877
EFL3018868S	251	$1,029
EFL3018979S	252	$1,139
EFL3024433S	248	$527
EFL3024656S	249	$815
EFL3024767S	250	$952
EFL3024868S	251	$1,072
EFL3024979S	252	$1,193
EFL3030433S	248	$587
EFL3030656S	249	$927
EFL3030767S	250	$1,083
EFL3030868S	251	$1,201
EFL3030979S	252	$1,318
EFL3609433S	248	$407
EFL3609656S	249	$590
EFL3609767S	250	$687
EFL3609868S	251	$758
EFL3609979S	252	$848
EFL3612433S	248	$384
EFL3612656S	249	$558
EFL3612767S	250	$649
EFL3612868S	251	$714
EFL3612979S	252	$799
EFL3615433S	248	$405
EFL3615656S	249	$588
EFL3615767S	250	$677
EFL3615868S	251	$756
EFL3615979S	252	$837
EFL3618433S	248	$510
EFL3618656S	249	$781
EFL3618767S	250	$877
EFL3618868S	251	$1,029
EFL3618979S	252	$1,139
EFL3624433S	248	$538
EFL3624656S	249	$815
EFL3624767S	250	$952
EFL3624868S	251	$1,072
EFL3624979S	252	$1,193
EFL3630433S	248	$587
EFL3630656S	249	$927
EFL3630767S	250	$1,083
EFL3630868S	251	$1,201
EFL3630979S	252	$1,318
EFL4209433S	248	$419
EFL4209656S	249	$625
EFL4209767S	250	$717
EFL4209868S	251	$791
EFL4209979S	252	$885
EFL4212433S	248	$404
EFL4212656S	249	$596
EFL4212767S	250	$695

Model No.	Page	List Price
EFL4212868S	251	$766
EFL4212979S	252	$857
EFL4215433S	248	$443
EFL4215656S	249	$672
EFL4215767S	250	$762
EFL4215868S	251	$853
EFL4215979S	252	$945
EFL4218433S	248	$527
EFL4218656S	249	$826
EFL4218767S	250	$941
EFL4218868S	251	$1,090
EFL4218979S	252	$1,207
EFL4224433S	248	$570
EFL4224656S	249	$907
EFL4224767S	250	$1,046
EFL4224868S	251	$1,179
EFL4224979S	252	$1,312
EFL4230433S	248	$639
EFL4230656S	249	$1,024
EFL4230767S	250	$1,195
EFL4230868S	251	$1,328
EFL4230979S	252	$1,459
EFL4809433S	248	$461
EFL4809656S	249	$699
EFL4809767S	250	$801
EFL4809868S	251	$889
EFL4809979S	252	$993
EFL4812433S	248	$456
EFL4812656S	249	$696
EFL4812767S	250	$798
EFL4812868S	251	$886
EFL4812979S	252	$992
EFL4815433S	248	$492
EFL4815656S	249	$753
EFL4815767S	250	$858
EFL4815868S	251	$956
EFL4815979S	252	$1,066
EFL4818433S	248	$573
EFL4818656S	249	$911
EFL4818767S	250	$1,027
EFL4818868S	251	$1,187
EFL4818979S	252	$1,315
EFL4824433S	248	$628
EFL4824656S	249	$1,006
EFL4824767S	250	$1,239
EFL4824868S	251	$1,398
EFL4824979S	252	$1,559
EFL4830433S	248	$689
EFL4830656S	249	$1,107
EFL4830767S	250	$1,291
EFL4830868S	251	$1,437
EFL4830979S	252	$1,583
EFO2409433A	248	$318
EFO2409656A	249	$502
EFO2409767A	250	$586
EFO2409868A	251	$650
EFO2409979A	252	$714
EFO2412433A	248	$294
EFO2412656A	249	$468
EFO2412767A	250	$535
EFO2412868A	251	$604
EFO2412979A	252	$664
EFO2415433A	248	$308

Model No.	Page	List Price
EFO2415656A	249	$491
EFO2415767A	250	$575
EFO2415868A	251	$638
EFO2415979A	252	$700
EFO2418433A	248	$414
EFO2418656A	249	$651
EFO2418767A	250	$768
EFO2418868A	251	$860
EFO2418979A	252	$947
EFO2424433A	248	$431
EFO2424656A	249	$701
EFO2424767A	250	$803
EFO2424868A	251	$898
EFO2424979A	252	$989
EFO2430433A	248	$464
EFO2430656A	249	$770
EFO2430767A	250	$883
EFO2430868A	251	$977
EFO2430979A	252	$1,076
EFO3009433A	248	$318
EFO3009656A	249	$502
EFO3009767A	250	$586
EFO3009868A	251	$650
EFO3009979A	252	$714
EFO3012433A	248	$294
EFO3012656A	249	$468
EFO3012767A	250	$535
EFO3012868A	251	$604
EFO3012979A	252	$664
EFO3015433A	248	$308
EFO3015656A	249	$491
EFO3015767A	250	$575
EFO3015868A	251	$638
EFO3015979A	252	$700
EFO3018433A	248	$419
EFO3018656A	249	$677
EFO3018767A	250	$762
EFO3018868A	251	$864
EFO3018979A	252	$952
EFO3024433A	248	$433
EFO3024656A	249	$703
EFO3024767A	250	$805
EFO3024868A	251	$900
EFO3024979A	252	$991
EFO3030433A	248	$466
EFO3030656A	249	$772
EFO3030767A	250	$885
EFO3030868A	251	$979
EFO3030979A	252	$1,078
EFO3609433A	248	$318
EFO3609656A	249	$502
EFO3609767A	250	$586
EFO3609868A	251	$650
EFO3609979A	252	$714
EFO3612433A	248	$297
EFO3612656A	249	$471
EFO3612767A	250	$538
EFO3612868A	251	$607
EFO3612979A	252	$667
EFO3615433A	248	$312
EFO3615656A	249	$495
EFO3615767A	250	$579
EFO3615868A	251	$642

Index

Model No.	Page	List Price
EFO3615979A	252	$704
EFO3618433A	248	$419
EFO3618656A	249	$677
EFO3618767A	250	$762
EFO3618868A	251	$864
EFO3618979A	252	$952
EFO3624433A	248	$433
EFO3624656A	249	$703
EFO3624767A	250	$805
EFO3624868A	251	$900
EFO3624979A	252	$991
EFO3630433A	248	$466
EFO3630656A	249	$772
EFO3630767A	250	$885
EFO3630868A	251	$979
EFO3630979A	252	$1,078
EFO4209433A	248	$331
EFO4209656A	249	$537
EFO4209767A	250	$615
EFO4209868A	251	$683
EFO4209979A	252	$752
EFO4212433A	248	$317
EFO4212656A	249	$509
EFO4212767A	250	$594
EFO4212868A	251	$659
EFO4212979A	252	$725
EFO4215433A	248	$350
EFO4215656A	249	$578
EFO4215767A	250	$665
EFO4215868A	251	$738
EFO4215979A	252	$794
EFO4218433A	248	$443
EFO4218656A	249	$722
EFO4218767A	250	$826
EFO4218868A	251	$926
EFO4218979A	252	$1,020
EFO4224433A	248	$476
EFO4224656A	249	$795
EFO4224767A	250	$900
EFO4224868A	251	$1,007
EFO4224979A	252	$1,111
EFO4230433A	248	$518
EFO4230656A	249	$869
EFO4230767A	250	$997
EFO4230868A	251	$1,106
EFO4230979A	252	$1,220
EFO4809433A	248	$372
EFO4809656A	249	$611
EFO4809767A	250	$700
EFO4809868A	251	$780
EFO4809979A	252	$860
EFO4812433A	248	$369
EFO4812656A	249	$609
EFO4812767A	250	$698
EFO4812868A	251	$778
EFO4812979A	252	$858
EFO4815433A	248	$399
EFO4815656A	249	$660
EFO4815767A	250	$759
EFO4815868A	251	$846
EFO4815979A	252	$933
EFO4818433A	248	$489
EFO4818656A	249	$807

Model No.	Page	List Price
EFO4818767A	250	$912
EFO4818868A	251	$1,023
EFO4818979A	252	$1,129
EFO4824433A	248	$534
EFO4824656A	249	$894
EFO4824767A	250	$1,092
EFO4824868A	251	$1,226
EFO4824979A	252	$1,357
EFO4830433A	248	$568
EFO4830656A	249	$952
EFO4830767A	250	$1,093
EFO4830868A	251	$1,215
EFO4830979A	252	$1,343
EFPG36721	262	$3,246
EFPG367211	262	$5,257
EFPG36732	262	$5,549
EFPG367322	262	$9,295
EFPG36743	262	$7,733
EFPG367433	262	$13,095
EFPG36821	262	$3,461
EFPG368211	262	$5,549
EFPG36832	262	$5,902
EFPG368322	262	$9,802
EFPG36843	262	$8,224
EFPG368433	262	$13,817
EFPG42721	262	$3,564
EFPG427211	262	$5,729
EFPG42732	262	$6,113
EFPG427322	262	$10,177
EFPG42743	262	$8,472
EFPG427433	262	$14,225
EFPG42821	262	$3,812
EFPG428211	262	$6,065
EFPG42832	262	$6,521
EFPG428322	262	$10,761
EFPG42843	262	$9,040
EFPG428433	262	$15,077
EFPL36721	261	$3,144
EFPL367211	261	$5,112
EFPL36732	261	$5,374
EFPL367322	261	$9,034
EFPL36743	261	$7,485
EFPL367433	261	$12,718
EFPL36821	261	$3,334
EFPL368211	261	$5,368
EFPL36832	261	$5,688
EFPL368322	261	$9,480
EFPL36843	261	$7,923
EFPL368433	261	$13,354
EFPL42721	261	$3,351
EFPL427211	261	$5,438
EFPL42732	261	$5,626
EFPL427322	261	$9,406
EFPL42743	261	$7,957
EFPL427433	261	$13,486
EFPL42821	261	$3,559
EFPL428211	261	$5,718
EFPL42832	261	$5,970
EFPL428322	261	$9,894
EFPL42843	261	$8,437
EFPL428433	261	$14,182
EFSR3676410A	259	$3,097
EFSR3676410S	259	$3,114

Model No.	Page	List Price
EFSR367676A	259	$5,281
EFSR367676S	259	$5,348
EFT2409433A	248	$373
EFT2409656A	249	$557
EFT2409767A	250	$794
EFT2409868A	251	$711
EFT2409979A	252	$787
EFT2412433A	248	$351
EFT2412656A	249	$525
EFT2412767A	250	$595
EFT2412868A	251	$678
EFT2412979A	252	$751
EFT2415433A	248	$371
EFT2415656A	249	$554
EFT2415767A	250	$638
EFT2415868A	251	$713
EFT2415979A	252	$788
EFT2418433A	248	$478
EFT2418656A	249	$714
EFT2418767A	250	$866
EFT2418868A	251	$961
EFT2418979A	252	$1,062
EFT2424433A	248	$502
EFT2424656A	249	$782
EFT2424767A	250	$902
EFT2424868A	251	$1,007
EFT2424979A	252	$1,112
EFT2430433A	248	$558
EFT2430656A	249	$880
EFT2430767A	250	$1,007
EFT2430868A	251	$1,119
EFT2430979A	252	$1,232
EFT3009433A	248	$373
EFT3009656A	249	$557
EFT3009767A	250	$644
EFT3009868A	251	$711
EFT3009979A	252	$787
EFT3012433A	248	$351
EFT3012656A	249	$525
EFT3012767A	250	$595
EFT3012868A	251	$678
EFT3012979A	252	$751
EFT3015433A	248	$371
EFT3015656A	249	$554
EFT3015767A	250	$638
EFT3015868A	251	$888
EFT3015979A	252	$788
EFT3018433A	248	$483
EFT3018656A	249	$754
EFT3018767A	250	$860
EFT3018868A	251	$965
EFT3018979A	252	$1,066
EFT3024433A	248	$504
EFT3024656A	249	$784
EFT3024767A	250	$904
EFT3024868A	251	$1,009
EFT3024979A	252	$1,114
EFT3030433A	248	$560
EFT3030656A	249	$882
EFT3030767A	250	$1,009
EFT3030868A	251	$1,121
EFT3030979A	252	$1,234
EFT3609433A	248	$373

Index

Model No.	Page	List Price
EFT3609656A	249	$557
EFT3609767A	250	$644
EFT3609868A	251	$711
EFT3609979A	252	$787
EFT3612433A	248	$354
EFT3612656A	249	$528
EFT3612767A	250	$598
EFT3612868A	251	$681
EFT3612979A	252	$754
EFT3615433A	248	$375
EFT3615656A	249	$558
EFT3615767A	250	$642
EFT3615868A	251	$718
EFT3615979A	252	$792
EFT3618433A	248	$483
EFT3618656A	249	$754
EFT3618767A	250	$860
EFT3618868A	251	$965
EFT3618979A	252	$1,066
EFT3624433A	248	$504
EFT3624656A	249	$784
EFT3624767A	250	$904
EFT3624868A	251	$1,009
EFT3624979A	252	$1,114
EFT3630433A	248	$560
EFT3630656A	249	$828
EFT3630767A	250	$1,009
EFT3630868A	251	$1,121
EFT3630979A	252	$1,234
EFT4209433A	248	$386
EFT4209656A	249	$592
EFT4209767A	250	$673
EFT4209868A	251	$745
EFT4209979A	252	$825
EFT4212433A	248	$374
EFT4212656A	249	$566
EFT4212767A	250	$654
EFT4212868A	251	$745
EFT4212979A	252	$812
EFT4215433A	248	$413
EFT4215656A	249	$642
EFT4215767A	250	$727
EFT4215868A	251	$814
EFT4215979A	252	$901
EFT4218433A	248	$507
EFT4218656A	249	$799
EFT4218767A	250	$925
EFT4218868A	251	$1,026
EFT4218979A	252	$1,135
EFT4224433A	248	$547
EFT4224656A	249	$876
EFT4224767A	250	$998
EFT4224868A	251	$1,116
EFT4224979A	252	$1,233
EFT4230433A	248	$612
EFT4230656A	249	$980
EFT4230767A	250	$1,121
EFT4230868A	251	$1,248
EFT4230979A	252	$1,376
EFT4809433A	248	$427
EFT4809656A	249	$666
EFT4809767A	250	$758
EFT4809868A	251	$841

Model No.	Page	List Price
EFT4809979A	252	$933
EFT4812433A	248	$426
EFT4812656A	249	$666
EFT4812767A	250	$758
EFT4812868A	251	$852
EFT4812979A	252	$945
EFT4815433A	248	$462
EFT4815656A	249	$723
EFT4815767A	250	$822
EFT4815868A	251	$922
EFT4815979A	252	$1,022
EFT4818433A	248	$553
EFT4818656A	249	$884
EFT4818767A	250	$1,010
EFT4818868A	251	$1,124
EFT4818979A	252	$1,243
EFT4824433A	248	$605
EFT4824656A	249	$1,041
EFT4824767A	250	$1,190
EFT4824868A	251	$1,335
EFT4824979A	252	$1,479
EFT4830433A	248	$662
EFT4830656A	249	$1,062
EFT4830767A	250	$1,217
EFT4830868A	251	$1,357
EFT4830979A	252	$1,499
EL5	165	$3,092
EL6	166	$2,211
EML3652X	246	$14,391
EML3653X	246	$18,610
EML3654X	246	$22,794
EML3672G	246	$11,361
EML3672L	245	$10,704
EML3673G	246	$14,763
EML3673L	245	$13,750
EML3674G	246	$18,083
EML3674L	245	$16,865
EML4852X	246	$14,607
EML4853X	246	$18,866
EML4854X	246	$23,118
EML4872G	246	$12,233
EML4872L	245	$11,758
EML4873G	246	$15,857
EML4873L	245	$15,132
EML4874G	246	$19,399
EML4874L	245	$18,612
EML7272G	246	$17,339
EML7272L	245	$16,364
EML7273G	246	$22,443
EML7273L	245	$20,956
EML7274G	246	$27,426
EML7274L	245	$25,794
EML9672L	245	$18,680
EML9673L	245	$23,981
EML9674L	245	$29,438
ESC2	234	$840
ESS2	234	$598
EST	234	$303
EU1	165	$4,541
EU2	166	$3,660
EU3	165	$3,610
EUB2	166	$3,660
EUB4	166	$2,729

Model No.	Page	List Price
EWH36	47	$494
EWH36S	47	$769
EWPF12	47	$399
EWPF12P	47	$499
EWPF15	47	$479
EWPF15P	47	$579
EWPF36	47	$649
EWPF36P	47	$749
EWPM12	47	$449
EWPM15	47	$529
EWPM36	47	$699
EWPW12	47	$299
EWPW15	47	$379
EWPW36	47	$549
EWS36	47	$340
EWSA36	47	$560
EWSA36S	47	$824
EWTCG	47	$9
EWTRAY	47	$179
EWWC	47	$12
EX2418S	264	$55
EX2436S	264	$103
EX24SS	265	$20
EX3018S	264	$49
EX3036S	264	$103
EX30SS	265	$20
EX3618S	264	$57
EX3636S	264	$106
EX36SS	265	$20
EX4218S	264	$55
EX4236S	264	$106
EX42SS	265	$20
EX4818S	264	$61
EX4836S	264	$113
EX48SS	265	$20
EXL2418865S	263	$1,001
EXL2436865S	263	$1,621
EXL3018865S	263	$974
EXL3036865S	263	$1,634
EXL3618865S	263	$1,019
EXL3636865S	263	$1,651
EXL4218865S	263	$1,014
EXL4236865S	263	$1,656
EXL4818865S	263	$1,041
EXL4836865S	263	$1,691
EXT2418865A	264	$938
EXT2436865A	264	$1,422
EXT3018865A	264	$911
EXT3036865A	264	$1,435
EXT3618865A	264	$956
EXT3636865A	264	$1,452
EXT4218865A	264	$951
EXT4236865A	264	$1,457
EXT4818865A	264	$978
EXT4836865A	264	$1,492
EZ3023	33	$686
EZ3023B	33	$945
EZ3023BF	33	$1,238
EZ3023BS	33	$1,096
EZ3023F	33	$996
EZ3023S	33	$840
EZ3623	33	$763
EZ3623B	33	$1,023

Index

Model No.	Page	List Price
EZ3623BF	33	$1,354
EZ3623BS	33	$1,170
EZ3623F	33	$1,081
EZ3623S	33	$923
EZ3624LR	26	$470
EZ3624LRMA	26	$844
EZ3624LRML	26	$781
EZ3624RR	25	$327
EZ3624RRMA	25	$709
EZ3624RRML	25	$637
EZ3624SR	25	$438
EZ3624SRMA	25	$814
EZ3624SRML	25	$748
EZ3628	34	$1,053
EZ3628F	34	$1,336
EZ3628FF	34	$1,667
EZ3628FFNT	30	$1,458
EZ3628FNT	30	$1,232
EZ3628L	34	$1,237
EZ3628LNT	30	$1,034
EZ3628NT	30	$845
EZ3630LR	26	$461
EZ3630LRMA	26	$836
EZ3630LRML	23	$771
EZ4223	33	$780
EZ4223B	33	$1,049
EZ4223BS	33	$1,197
EZ4223S	33	$945
EZ4224LR	26	$488
EZ4224LRMA	26	$912
EZ4224LRML	26	$810
EZ4224RR	25	$379
EZ4224RRMA	25	$809
EZ4224RRML	25	$953
EZ4224SR	25	$456
EZ4224SRMA	25	$882
EZ4224SRML	25	$777
EZ4230LR	26	$498
EZ4230LRMA	26	$923
EZ4230LRML	26	$820
EZ4823	33	$806
EZ4823B	33	$1,075
EZ4823BS	33	$1,223
EZ4823S	33	$971
EZ4824CB	23	$1,338
EZ4824CBMA	23	$1,669
EZ4824CBML	23	$1,648
EZ4824CF	23	$1,292
EZ4824CFMA	23	$1,625
EZ4824CFML	23	$1,602
EZ4824CW	27	$510
EZ4824KB	27	$1,254
EZ4824KF	27	$1,208
EZ4824LB	22	$1,349
EZ4824LBMA	22	$1,679
EZ4824LBML	22	$1,659
EZ4824LC	21	$627
EZ4824LCMA	21	$1,074
EZ4824LCML	21	$953
EZ4824LF	22	$1,303
EZ4824LFMA	22	$1,636
EZ4824LFML	22	$1,613
EZ4824LL	21	$638
EZ4824LLMA	21	$1,085
EZ4824LLML	21	$965
EZ4824LR	26	$533
EZ4824LRMA	26	$984
EZ4824LRML	26	$859
EZ4824LS	21	$606
EZ4824LSMA	21	$1,024
EZ4824LSML	21	$928
EZ4824LW	27	$521
EZ4824RB	26	$1,241
EZ4824RBMA	26	$1,578
EZ4824RBML	26	$1,548
EZ4824RF	26	$1,195
EZ4824RFMA	26	$1,534
EZ4824RFML	26	$1,506
EZ4824RR	25	$422
EZ4824RRMA	25	$880
EZ4824RRML	25	$748
EZ4824SB	23	$1,317
EZ4824SBMA	23	$1,640
EZ4824SBML	23	$1,623
EZ4824SF	23	$1,271
EZ4824SFMA	23	$1,597
EZ4824SFML	23	$1,577
EZ4824SR	25	$501
EZ4824SRMA	25	$954
EZ4824SRML	25	$827
EZ4830CW	27	$516
EZ4830KB	27	$1,315
EZ4830KF	27	$1,269
EZ4830LL	21	$645
EZ4830LLMA	21	$1,091
EZ4830LLML	221	$971
EZ4830LR	26	$539
EZ4830LRMA	26	$991
EZ4830LRML	26	$865
EZ4830LS	21	$612
EZ4830LSMA	21	$1,030
EZ4830LSML	21	$934
EZ4830LW	27	$528
EZ4830RB	26	$1,302
EZ4830RBMA	26	$1,635
EZ4830RBML	26	$1,612
EZ4830RF	26	$1,256
EZ4830RFMA	26	$1,592
EZ4830RFML	26	$1,566
EZ6024BB	23,28	$2,089
EZ6024BBMA	23,28	$2,373
EZ6024BBML	23,28	$2,395
EZ6024BF	23,29	$2,043
EZ6024BFMA	23,29	$2,330
EZ6024BFML	23,29	$2,349
EZ6024CB	23	$1,368
EZ6024CBMA	23	$1,778
EZ6024CBML	23	$1,694
EZ6024CF	23	$1,322
EZ6024CFMA	23	$1,735
EZ6024CFML	23	$1,648
EZ6024CW	27	$541
EZ6024FF	23,28	$1,997
EZ6024FFMA	23,28	$2,286
EZ6024FFML	23,28	$2,303
EZ6024KB	27	$1,274
EZ6024KF	27	$1,228
EZ6024LB	22,28	$1,379
EZ6024LBMA	22,28	$1,789
EZ6024LBML	22,28	$1,705
EZ6024LC	21,28	$658
EZ6024LCMA	21,28	$1,272
EZ6024LCML	21,28	$1,020
EZ6024LF	22,28	$1,333
EZ6024LFMA	22,28	$1,745
EZ6024LFML	22,28	$1,659
EZ6024LL	21,28	$670
EZ6024LLMA	21,28	$1,282
EZ6024LLML	21,28	$1,031
EZ6024LS	21,28	$637
EZ6024LSMA	21,28	$1,250
EZ6024LSML	21,28	$968
EZ6024LW	27	$553
EZ6024SB	23,28	$1,347
EZ6024SBMA	23,28	$1,728
EZ6024SBML	23,28	$1,653
EZ6024SF	23,28	$1,301
EZ6024SFMA	23,28	$1,685
EZ6024SFML	23,28	$1,623
EZ6030BB	23	$2,204
EZ6030BBMA	23	$2,483
EZ6030BBML	23	$2,510
EZ6030BF	23	$2,158
EZ6030BFMA	23	$2,439
EZ6030BFML	23	$2,464
EZ6030CB	23	$1,429
EZ6030CBMA	23	$1,836
EZ6030CBML	23	$1,755
EZ6030CF	23	$1,383
EZ6030CFMA	23	$1,792
EZ6030CFML	23	$1,709
EZ6030CW	27	$548
EZ6030FF	23	$2,112
EZ6030FFMA	23	$2,398
EZ6030FFML	23	$2,418
EZ6030KB	27	$1,334
EZ6030KF	27	$1,288
EZ6030LB	22	$1,440
EZ6030LBMA	22	$1,847
EZ6030LBML	22	$1,766
EZ6030LC	21	$665
EZ6030LCMA	21	$1,278
EZ6030LCML	21	$1,026
EZ6030LF	22	$1,394
EZ6030LFMA	22	$1,803
EZ6030LFML	22	$1,720
EZ6030LL	21	$676
EZ6030LLMA	21	$1,121
EZ6030LLML	21	$1,038
EZ6030LS	21	$644
EZ6030LSMA	21	$1,256
EZ6030LSML	21	$974
EZ6030LW	27	$559
EZ6030SB	23	$1,408
EZ6030SBMA	23	$1,786
EZ6030SBML	23	$1,729
EZ6030SF	23	$1,362
EZ6030SFMA	23	$1,742
EZ6030SFML	23	$1,683

Index

Model No.	Page	List Price
EZ6036BB	23	$2,395
EZ6036BBMA	23	$2,665
EZ6036BBML	23	$2,701
EZ6036BF	23	$2,323
EZ6036BFMA	23	$2,596
EZ6036BFML	23	$2,629
EZ6036CB	23	$1,550
EZ6036CBMA	23	$1,951
EZ6036CBML	23	$1,876
EZ6036CF	23	$1,478
EZ6036CFMA	23	$1,882
EZ6036CFML	23	$1,804
EZ6036FF	23	$2,251
EZ6036FFMA	23	$2,528
EZ6036FFML	23	$2,557
EZ6036LB	22	$1,561
EZ6036LBMA	22	$1,961
EZ6036LBML	22	$1,887
EZ6036LC	21	$716
EZ6036LCMA	21	$1,326
EZ6036LCML	21	$1,077
EZ6036LF	22	$1,489
EZ6036LFMA	22	$1,894
EZ6036LFML	22	$1,815
EZ6036LL	21	$727
EZ6036LLMA	21	$1,338
EZ6036LLML	21	$1,089
EZ6036LS	21	$695
EZ6036LSMA	21	$1,304
EZ6036LSML	21	$1,025
EZ6036SB	23	$1,529
EZ6036SBMA	23	$1,901
EZ6036SBML	23	$1,851
EZ6036SF	23	$1,457
EZ6036SFMA	23	$1,833
EZ6036SFML	23	$1,779
EZ7224BB	23,28	$2,132
EZ7224BBMA	23,28	$2,474
EZ7224BBML	23,28	$2,454
EZ7224BF	23,29	$2,086
EZ7224BFMA	23	$2,431
EZ7224BFML	23	$2,408
EZ7224CB	23	$1,409
EZ7224CBMA	23	$1,984
EZ7224CBML	23	$1,770
EZ7224CF	23	$1,363
EZ7224CFMA	23	$1,941
EZ7224CFML	23	$1,724
EZ7224CW	27	$581
EZ7224FF	23,28	$2,040
EZ7224FFMA	23,28	$2,387
EZ7224FFML	23,28	$2,362
EZ7224KB	27	$1,306
EZ7224KF	27	$1,260
EZ7224LB	22,28	$1,420
EZ7224LBMA	22,28	$1,996
EZ7224LBML	22,28	$1,782
EZ7224LC	21,28	$698
EZ7224LCMA	21,28	$1,337
EZ7224LCML	21,28	$1,071
EZ7224LF	22,28	$1,374
EZ7224LFMA	22,28	$1,952
EZ7224LFML	22,28	$1,736

Model No.	Page	List Price
EZ7224LL	21,28	$710
EZ7224LLMA	21,28	$1,347
EZ7224LLML	21,28	$1,083
EZ7224LS	21,28	$677
EZ7224LSMA	21,28	$1,305
EZ7224LSML	21,28	$1,044
EZ7224LW	23,28	$593
EZ7224SB	23,28	$1,388
EZ7224SBMA	23,28	$1,963
EZ7224SBML	23,28	$1,718
EZ7224SF	23,28	$1,342
EZ7224SFMA	23,28	$1,919
EZ7224SFML	23,28	$1,672
EZ7228	29,34	$1,891
EZ7228L	29,34	$2,300
EZ7230BB	23	$2,251
EZ7230BBMA	23	$2,587
EZ7230BBML	23	$2,573
EZ7230BF	23	$2,205
EZ7230BFMA	23	$2,544
EZ7230BFML	23	$2,527
EZ7230CB	23	$1,473
EZ7230CBMA	23	$2,046
EZ7230CBML	23	$1,835
EZ7230CF	23	$1,427
EZ7230CFMA	23	$2,002
EZ7230CFML	23	$1,789
EZ7230CW	27	$591
EZ7230FF	23	$2,159
EZ7230FFMA	23	$2,503
EZ7230FFML	23	$2,481
EZ7230KB	27	$1,371
EZ7230KF	27	$1,325
EZ7230LB	22	$1,485
EZ7230LBMA	22	$2,057
EZ7230LBML	22	$1,847
EZ7230LC	21	$709
EZ7230LCMA	21	$1,346
EZ7230LCML	21	$1,082
EZ7230LF	22	$1,439
EZ7230LFMA	22	$2,014
EZ7230LFML	22	$1,801
EZ7230LL	21	$720
EZ7230LLMA	21	$1,357
EZ7230LLML	21	$1,093
EZ7230LS	21	$688
EZ7230LSMA	21	$1,316
EZ7230LSML	21	$1,054
EZ7230LW	27	$603
EZ7230SB	23	$1,453
EZ7230SBMA	23	$2,024
EZ7230SBML	23	$1,783
EZ7230SF	23	$1,407
EZ7230SFMA	23	$1,980
EZ7230SFML	23	$1,737
EZ7236BB	23	$2,445
EZ7236BBMA	23	$2,667
EZ7236BBML	23	$2,767
EZ7236BF	23	$2,373
EZ7236BFMA	23	$2,703
EZ7236BFML	23	$2,695
EZ7236CB	23	$1,598
EZ7236CBMA	23	$2,164

Model No.	Page	List Price
EZ7236CBML	23	$1,959
EZ7236CF	23	$1,526
EZ7236CFMA	23	$2,095
EZ7236CFML	23	$1,887
EZ7236FF	23	$2,301
EZ7236FFMA	23	$2,634
EZ7236FFML	23	$2,623
EZ7236LB	22	$1,609
EZ7236LBMA	22	$2,175
EZ7236LBML	22	$1,971
EZ7236LC	21	$763
EZ7236LCMA	21	$1,398
EZ7236LCML	21	$1,136
EZ7236LF	22	$1,537
EZ7236LFMA	22	$2,107
EZ7236LFML	22	$1,899
EZ7236LL	21	$774
EZ7236LLMA	21	$1,408
EZ7236LLML	21	$1,147
EZ7236LS	21	$742
EZ7236LSMA	21	$1,367
EZ7236LSML	21	$1,109
EZ7236SB	23	$1,577
EZ7236SBMA	23	$2,142
EZ7236SBML	23	$1,907
EZ7236SF	23	$1,505
EZ7236SFMA	23	$2,074
EZ7236SFML	23	$1,835
EZAPP18	31,32	$271
EZAPP24	31,32	$292
EZAPP30	31,32	$312
EZAPP36	31	$323
EZAPP42	31	$344
EZAPP48	31	$365
EZAPP54	31	$396
EZAPP60	31	$417
EZAPP66	31	$448
EZASP24	31	$292
EZASP30	31	$312
EZASP36	31	$323
EZASP42	31	$344
EZASP48	31	$365
EZASP54	31	$396
EZASP60	31	$417
EZASP66	31	$448
EZBC2423	36	$521
EZBC2434	36	$653
EZBC3023	36	$542
EZBC3034	36	$705
EZBC3623	36	$553
EZBC3629	35	$712
EZBC3634	36	$803
EZBC3651	35	$1,042
EZBC3662	35	$1,115
EZBRB	45	$46
EZBTL18	91	$249
EZBTL30	91	$329
EZCA24	39	$285
EZCBK	33	$312
EZCRT	37	$22
EZCS	39	$314
EZCSHB	60	$191
EZCSHF	60	$191

Index

Model No.	Page	List Price
EZDC	91	$399
EZDCS	91	$475
EZDEB10	45	$107
EZDEB13	45	$117
EZDEB16	45,47	$130
EZDEB24	45	$143
EZDEB30	45	$158
EZDEB36	45,47	$170
EZDM	91	$399
EZDMS	91	$475
EZDO	91	$295
EZDP	91	$185
EZDR	91	$295
EZEC206	42	$398
EZEP3624R	26	$459
EZEP3624RMA	26	$825
EZEP3624RML	26	$769
EZEP3630R	26	$516
EZEP3630RMA	26	$888
EZEP3630RML	26	$827
EZEP4224R	26	$491
EZEP4224RMA	26	$915
EZEP4224RML	26	$817
EZEP4230R	26	$556
EZEP4230RMA	26	$977
EZEP4230RML	26	$878
EZEP4824B	22	$1,351
EZEP4824BMA	22	$1,681
EZEP4824BML	22	$1,662
EZEP4824C	21	$630
EZEP4824CMA	21	$1,077
EZEP4824CML	21	$956
EZEP4824F	22	$1,305
EZEP4824FMA	22	$1,639
EZEP4824FML	22	$1,616
EZEP4824L	21	$642
EZEP4824LMA	21	$1,088
EZEP4824LML	21	$968
EZEP4824R	26	$535
EZEP4824RMA	26	$986
EZEP4824RML	26	$861
EZEP4824S	22	$609
EZEP4824SMA	22	$1,027
EZEP4824SML	22	$931
EZEP4830B	22	$1,558
EZEP4830BMA	22	$1,878
EZEP4830BML	22	$1,868
EZEP4830C	21	$783
EZEP4830CMA	21	$1,222
EZEP4830CML	21	$1,109
EZEP4830F	22	$1,512
EZEP4830FMA	22	$1,835
EZEP4830FML	22	$1,822
EZEP4830L	21	$794
EZEP4830LMA	21	$1,233
EZEP4830LML	21	$1,120
EZEP4830R	26	$688
EZEP4830RMA	26	$1,132
EZEP4830RML	26	$1,014
EZEP4830S	22	$762
EZEP4830SMA	22	$1,172
EZEP4830SML	22	$1,084
EZEP6024B	22,29	$1,395
EZEP6024BMA	22,29	$1,804
EZEP6024BML	22,29	$1,721
EZEP6024C	21,29	$674
EZEP6024CMA	21,29	$1,286
EZEP6024CML	22,29	$1,036
EZEP6024F	22,29	$1,349
EZEP6024FMA	22,29	$1,760
EZEP6024FML	22,29	$1,675
EZEP6024L	21,29	$686
EZEP6024LMA	21,29	$1,298
EZEP6024LML	21,29	$1,047
EZEP6024S	22,29	$653
EZEP6024SMA	22,29	$1,264
EZEP6024SML	22,29	$983
EZEP6030B	22	$1,503
EZEP6030BMA	22	$1,906
EZEP6030BML	22	$1,829
EZEP6030C	21	$727
EZEP6030CMA	21	$1,338
EZEP6030CML	21	$1,089
EZEP6030F	22	$1,457
EZEP6030FMA	22	$1,862
EZEP6030FML	22	$1,783
EZEP6030L	21	$739
EZEP6030LMA	21	$1,348
EZEP6030LML	21	$1,100
EZEP6030S	22	$706
EZEP6030SMA	22	$1,316
EZEP6030SML	22	$1,037
EZEP6036B	22	$1,628
EZEP6036BMA	22	$2,025
EZEP6036BML	22	$1,954
EZEP6036C	22	$783
EZEP6036CMA	22	$1,390
EZEP6036CML	22	$1,144
EZEP6036F	22	$1,556
EZEP6036FMA	22	$1,956
EZEP6036FML	22	$1,882
EZEP6036L	21	$794
EZEP6036LMA	21	$1,400
EZEP6036LML	21	$1,156
EZEP6036S	22	$762
EZEP6036SMA	22	$1,368
EZEP6036SML	22	$1,092
EZEP7224B	22,29	$1,496
EZEP7224BMA	22,29	$2,068
EZEP7224BML	22,29	$1,858
EZEP7224C	21,29	$777
EZEP7224CMA	21,29	$1,412
EZEP7224CML	21,29	$1,151
EZEP7224F	22,29	$1,450
EZEP7224FMA	22,29	$2,024
EZEP7224FML	22,29	$1,812
EZEP7224L	21,29	$789
EZEP7224LMA	21,29	$1,422
EZEP7224LML	21,29	$1,162
EZEP7224S	22,29	$757
EZEP7224SMA	22,29	$1,380
EZEP7224SML	22,29	$1,123
EZEP7230B	22	$1,563
EZEP7230BMA	22	$2,132
EZEP7230BML	22	$1,925
EZEP7230C	22	$790
EZEP7230CMA	22	$1,423
EZEP7230CML	22	$1,163
EZEP7230F	22	$1,517
EZEP7230FMA	22	$2,088
EZEP7230FML	22	$1,879
EZEP7230L	21	$802
EZEP7230LMA	21	$1,435
EZEP7230LML	21	$1,175
EZEP7230S	22	$769
EZEP7230SMA	22	$1,393
EZEP7230SML	22	$1,136
EZEP7236B	22	$1,689
EZEP7236BMA	22	$2,251
EZEP7236BML	22	$2,050
EZEP7236C	22	$845
EZEP7236CMA	22	$1,449
EZEP7236CML	22	$1,218
EZEP7236F	22	$1,617
EZEP7236FMA	22	$2,182
EZEP7236FML	22	$1,978
EZEP7236L	21	$857
EZEP7236LMA	21	$1,487
EZEP7236LML	21	$1,230
EZEP7236S	22	$825
EZEP7236SMA	22	$1,445
EZEP7236SML	22	$1,191
EZETP10K	42	$276
EZETP1K	42	$146
EZETP2K	42	$186
EZETP3K	42	$262
EZETP4K	42	$294
EZETP5K	42	$296
EZETP6K	42	$384
EZETP7K	42	$92
EZETP8K	42	$224
EZETP9K	42	$297
EZFC18	30	$562
EZH24	38	$391
EZH24S	38	$521
EZH30	38	$426
EZH30F	38	$750
EZH30L	38	$573
EZH30S	38	$626
EZH36	38	$464
EZH36F	38	$791
EZH36L	38	$632
EZH36S	38	$730
EZH42F	38	$840
EZH42L	38	$676
EZH48F	38	$855
EZH48L	38	$691
EZH60F	38	$1,343
EZH60L	38	$1,001
EZH72F	38	$1,392
EZH72L	38	$1,045
EZH78F	38	$1,412
EZH78L	38	$1,066
EZHL7224CW	27	$742
EZHL7224KB	27	$1,467
EZHL7224KF	27	$1,421
EZHL7224LB	24	$1,581
EZHL7224LBMA	24	$2,149
EZHL7224LBML	24	$1,943

Index

Model No.	Page	List Price
EZHL7224LC	24	$859
EZHL7224LCMA	24	$1,479
EZHL7224LCML	24	$1,226
EZHL7224LF	24	$1,535
EZHL7224LFMA	24	$2,105
EZHL7224LFML	24	$1,818
EZHL7224LL	24	$870
EZHL7224LLMA	24	$1,489
EZHL7224LLML	24	$1,244
EZHL7224LS	24	$838
EZHL7224LSMA	24	$1,459
EZHL7224LSML	24	$1,205
EZHL7224LW	27	$753
EZHL7224SB	24	$1,549
EZHL7224SBMA	24	$2,115
EZHL7224SBML	24	$1,879
EZHL7224SF	24	$1,503
EZHL7224SFMA	24	$2,072
EZHL7224SFML	24	$1,833
EZHL7224SS	24	$806
EZHL7224SSMA	24	$1,412
EZHL7224SSML	24	$1,167
EZHR48	30	$710
EZHR52	30	$730
EZHR53	30	$762
EZHR60	30	$783
EZHR64	30	$804
EZHR65	30	$856
EZHR72	30	$835
EZHR7224CW	27	$742
EZHR7224KB	27	$1,467
EZHR7224KF	27	$1,421
EZHR7224LB	24	$1,581
EZHR7224LBMA	24	$2,149
EZHR7224LBML	24	$1,943
EZHR7224LC	24	$859
EZHR7224LCMA	24	$1,479
EZHR7224LCML	24	$1,226
EZHR7224LF	24	$1,535
EZHR7224LFMA	24	$2,105
EZHR7224LFML	24	$1,818
EZHR7224LL	24	$870
EZHR7224LLMA	24	$1,489
EZHR7224LLML	24	$1,244
EZHR7224LS	24	$838
EZHR7224LSMA	24	$1,459
EZHR7224LSML	24	$1,205
EZHR7224LW	27	$753
EZHR7224SB	24	$1,549
EZHR7224SBMA	24	$2,115
EZHR7224SBML	24	$1,879
EZHR7224SF	24	$1,503
EZHR7224SFMA	24	$2,072
EZHR7224SFML	24	$1,833
EZHR7224SS	24	$806
EZHR7224SSMA	24	$1,412
EZHR7224SSML	24	$1,167
EZHR76	30	$856
EZHR77	30	$887
EZKC1	89	$485
EZKC2	89	$735
EZKCC	89	$275
EZKE1	89	$299

Model No.	Page	List Price
EZKE2	89	$422
EZKT101	37	$22
EZKT102	37	$22
EZKT103	37	$22
EZKT104	37	$22
EZMAP16	32	$260
EZMAP22	32	$312
EZMAP28	32	$323
EZMK	37	$22
EZMLP16	32	$62
EZMLP22	32	$68
EZMLP28	32	$72
EZMTPP	44	$149
EZMTPU	44	$169
EZP24	36	$588
EZP24BBF	36	$877
EZP24FF	36	$831
EZP30	36	$674
EZP30BBF	36	$931
EZP30FF	36	$885
EZP36	36	$732
EZP36BBF	36	$1,001
EZP36FF	36	$929
EZP6024	28	$648
EZP6024D	28	$1,251
EZP6024S	28	$454
EZPM24BF	37	$620
EZPP12	44	$622
EZPWFP48	41	$135
EZPWFP60	41	$145
EZPWFP72	41	$156
EZPWFT	41	$312
EZPWSK48	41	$333
EZPWSK60	41	$365
EZPWSK72	30,41	$407
EZR48	30	$438
EZR52	30	$459
EZR53	30	$480
EZR60	30	$459
EZR64	30	$480
EZR65	30	$501
EZR72	30	$480
EZR76	30	$501
EZR77	30	$521
EZSA24	38	$442
EZSA24S	38	$521
EZSA30	38	$461
EZSA30S	38	$678
EZSA36	38	$530
EZSA36S	38	$783
EZSC15	13,33,37	$277
EZSC24	33	$277
EZSC30	13,33	$297
EZSC36	33	$326
EZSC42	33	$357
EZSC48	33	$377
EZSM18H	39	$437
EZSM18V	39	$437
EZTB24HA	40	$1,118
EZTB24HS	40	$1,293
EZTB24PS	40	$1,265
EZTB30HA	40	$1,176
EZTB30HS	40	$1,342

Model No.	Page	List Price
EZTB30PS	40	$1,315
EZTB36HA	40	$1,222
EZTB36HS	40	$1,378
EZTB36PS	40	$1,351
EZTB42HA	40	$1,256
EZTB42HS	40	$1,403
EZTB42PS	40	$1,376
EZTB48HA	40	$1,462
EZTB48HS	40	$1,636
EZTB48PS	40	$1,609
EZTB60HA	40	$1,559
EZTB60HS	40	$1,725
EZTB60PS	40	$1,698
EZTB72HA	40	$1,664
EZTB72HS	40	$1,820
EZTB72PS	40	$1,793
EZTKB10	45	$89
EZTKB10P	45	$170
EZTKB13	45	$98
EZTKB13P	45	$182
EZTKB16	45,47	$110
EZTKB16P	45,47	$195
EZTKB24	45	$126
EZTKB24P	45	$203
EZTKB30	45	$144
EZTKB30P	45	$222
EZTKB36	45,47	$160
EZTKB36P	45,47	$239
EZTL60CW	27	$584
EZTL60LC	25	$701
EZTL60LCMA	25	$1,313
EZTL60LCML	25	$1,063
EZTL60LL	25	$713
EZTL60LLMA	25	$1,323
EZTL60LLML	25	$1,074
EZTL60LS	25	$690
EZTL60LSMA	25	$1,300
EZTL60LSML	25	$1,020
EZTL60LW	27	$596
EZTL60SS	25	$648
EZTL60SSMA	25	$1,094
EZTL60SSML	25	$974
EZTL72CW	27	$634
EZTL72LC	25	$751
EZTL72LCMA	25	$1,387
EZTL72LCML	25	$1,124
EZTL72LL	25	$763
EZTL72LLMA	25	$1,398
EZTL72LLML	25	$1,136
EZTL72LS	25	$740
EZTL72LSMA	25	$1,349
EZTL72LSML	25	$1,101
EZTL72LW	27	$646
EZTL72SS	25	$698
EZTL72SSMA	25	$1,309
EZTL72SSML	25	$1,060
EZTM30	45	$543
EZTM42	45	$585
EZTM48	45	$632
EZTP2412	32	$365
EZTP2412P	32	$449
EZTP2418	32	$469
EZTP2418P	32	$549

Index

Model No.	Page	List Price
EZTP3012	32	$396
EZTP3012P	32	$479
EZTP3018	32	$501
EZTP3018P	32	$579
EZTP3612	32	$427
EZTP3612P	32	$509
EZTP3618	32	$532
EZTP3618P	32	$609
EZTP4212	32	$480
EZTP4212P	32	$559
EZTP4218	32	$584
EZTP4218P	32	$659
EZTP4812	32	$511
EZTP4812P	32	$589
EZTP4818	32	$616
EZTP4818P	32	$689
EZTP5412	32	$532
EZTP5412P	32	$609
EZTP5418	32	$636
EZTP5418P	32	$709
EZTP6012	32	$563
EZTP6012P	32	$639
EZTP6018	32	$668
EZTP6018P	32	$739
EZTP6612	32	$605
EZTP6612P	32	$679
EZTP6618	32	$710
EZTP6618P	32	$779
EZTR60CW	27	$584
EZTR60LC	25	$701
EZTR60LCMA	25	$1,313
EZTR60LCML	25	$1,063
EZTR60LL	25	$713
EZTR60LLMA	25	$1,313
EZTR60LLML	25	$1,074
EZTR60LS	25	$690
EZTR60LSMA	25	$1,300
EZTR60LSML	25	$1,020
EZTR60LW	27	$596
EZTR60SS	25	$648
EZTR60SSMA	25	$1,094
EZTR60SSML	25	$974
EZTR72CW	27	$634
EZTR72LC	25	$751
EZTR72LCMA	25	$1,387
EZTR72LCML	25	$1,124
EZTR72LL	25	$763
EZTR72LLMA	25	$1,398
EZTR72LLML	25	$1,136
EZTR72LS	25	$740
EZTR72LSMA	25	$1,349
EZTR72LSML	25	$1,101
EZTR72LW	27	$646
EZTR72SS	25	$698
EZTR72SSMA	25	$1,309
EZTR72SSML	25	$1,060
EZTW48HA	41	$2,302
EZTW48HS	41	$2,477
EZTW48PS	41	$2,449
EZTW60HA	41	$2,492
EZTW60HS	41	$2,658
EZTW60PS	41	$2,631
EZTW72HA	41	$2,692
EZTW72HS	41	$2,849
EZTW72PS	41	$2,822
EZVCL	44	$51
EZWC17	32	$86
EZWC23	32	$89
EZWC29	32	$91
EZWC6	44	$6
EZWT51	35	$2,090
EZWT51R	35	$2,000
EZWT62	35	$2,159
EZWT62R	35	$2,066
EZWT6ZR	35	$2,066
EZWTC51	35	$1,484
EZWTC62	35	$1,543
F09DV24	256	$222
F09DV6	256	$56
F12DV24	256	$148
F12DV6	256,279	$37
F15DV24	256	$168
F15DV6	256,279	$43
F18SR	256	$7
F18SRA	256	$8
F24SR	256	$11
F24SRA	256	$15
F30SR	256	$7
F30SRA	256	$15
F740	178,221	$24
F890	200	$104
FF521	282	$7,303
FF5211	282	$10,652
FF5211K	282	$10,702
FF521K	282	$7,353
FF532	282	$12,352
FF5322	282	$18,771
FF5322K	282	$18,821
FF532K	282	$12,402
FF543	282	$17,278
FF5433	282	$26,646
FF5433K	282	$26,696
FF543K	282	$17,328
FF621	282	$7,942
FF6211	282	$11,503
FF6211K	282	$11,553
FF621K	282	$7,992
FF632	282	$13,415
FF6322	282	$20,262
FF6322K	282	$20,312
FF632K	282	$13,687
FF643	282	$18,768
FF6433	282	$28,774
FF6433K	282	$28,826
FF643K	282	$18,820
FF721	282	$8,947
FF7211	282	$12,846
FF7211K	282	$12,896
FF721K	282	$9,110
FF732	282	$15,094
FF7322	282	$22,609
FF7322K	282	$22,661
FF732K	282	$15,365
FF743	282	$21,115
FF7433	282	$32,129
FF7433K	282	$32,179
FF743K	282	$21,496
FFD	282	$3
FFD5	282	$1,977
FFD5K	282	$2,031
FFD6	282	$2,190
FFD6K	282	$2,244
FFD7	282	$2,526
FFD7K	282	$2,580
FFDMK	282	$17
FFN5	282	$1,425
FFN6	282	$1,587
FFN7	282	$1,783
FH2448	187	$926
FH3060	187	$1,030
FH3621	271	$10,906
FH36211	271	$15,437
FH3632	271	$18,350
FH36322	271	$27,137
FH3643	271	$25,672
FH36433	271	$38,594
FH3672	187	$1,300
FH4221	271	$11,932
FH42211	271	$16,891
FH4232	271	$19,969
FH42322	271	$29,479
FH4243	271	$28,062
FH42433	271	$42,178
FH4821	271	$12,534
FH48211	271	$17,768
FH4832	271	$21,137
FH48322	271	$31,069
FH4843	271	$29,659
FH48433	271	$44,379
FHAK	269	$29
FPA6P	259	$34
FPD2M	325	$183
FPD2TW	319	$183
FR1848	186	$894
FR1860	186	$915
FR1872	186	$983
FR2436	186	$894
FR2442	186	$910
FR2448	186	$926
FR2454	186	$941
FR2460	186	$952
FR2466	186	$1,035
FR2472	187	$1,092
FR3036	187	$946
FR3042	187	$967
FR3048	187	$988
FR3054	187	$1,004
FR3060	187	$1,030
FR3066	187	$1,123
FR3072	187	$1,165
FR3648	187	$1,118
FR3660	187	$1,238
FR3672	187	$1,300
FT2448	187	$926
FT3048	187	$988
FTB36	164,173	$381
FTB48	164,173	$462
FTB63	140	$493
FTB68	164,173	$513

Index

Model No.	Page	List Price
FTB72	129,140,152	$493
FTMOD24	187	$290
FTMOD36	187	$321
FTMOD42	187	$342
FTMOD48	187	$363
FTMOD54	187	$394
FTMOD60	187	$415
FWCAST	187,189,191	$62
G	301,304	$28
GMT1	178	$26
GMT2	178	$26
GROMMET	164	$6
GS11	224	$499
GS11F10	224	$769
GS11F2	224	$529
GS11F3	224	$559
GS11F4	224	$589
GS11F5	224	$619
GS11F6	224	$649
GS11F7	224	$679
GS11F8	224	$709
GS11F9	224	$739
GS11FX	224	$582
GS22	224	$582
GS22F10	224	$852
GS22F2	224	$612
GS22F3	224	$642
GS22F4	224	$672
GS22F5	224	$702
GS22F6	224	$732
GS22F7	224	$762
GS22F8	224	$792
GS22F9	224	$822
GS22FX	224	$673
GS33	224	$682
GS33F10	224	$952
GS33F2	224	$712
GS33F3	224	$742
GS33F4	224	$772
GS33F5	224	$802
GS33F6	224	$832
GS33F7	224	$862
GS33F8	224	$892
GS33F9	224	$922
GS33FX	224	$783
HACK	327	$150
HADC	327	$6,495
HAMMC	327	$5,395
HAPC	327	$325
HB24D	192	$676
HB24S	192	$676
HB30D	192	$712
HB30S	192	$712
HB36D	192	$811
HB36S	192	$811
HB42D	192	$894
HB42S	192	$894
HD24D	192	$655
HD24S	192	$655
HD30D	192	$692
HD30S	192	$692
HD36D	192	$790
HD36S	192	$790

Model No.	Page	List Price
HD42D	192	$874
HD42S	192	$874
HDC2072	160	$1,754
HDC3620	160	$1,065
HLT302	61	$710
HLT303	61	$960
HLT304	61	$1,112
HLT305	61	$1,515
HLT362	61	$852
HLT363	61	$1,029
HLT364	61	$1,281
HLT365	61	$1,613
HLT422	61	$995
HLT423	61	$1,108
HLT424	61	$1,447
HLT425	61	$1,727
HLTDV10	61	$85
HLTFBR4	61	$50
HMMOD24	189	$290
HMMOD36	189,191	$321
HMMOD42	189,191	$342
HMMOD48	189,191	$363
HMMOD54	189,191	$394
HMMOD60	189,191	$415
HR1848	188	$645
HR1860	188	$676
HR1872	188	$707
HR2436	188	$660
HR2442	188	$676
HR2448	188	$692
HR2454	188	$723
HR2460	188	$733
HR2466	188	$770
HR2472	188	$785
HR3036	189	$727
HR3042	189	$733
HR3048	189	$744
HR3054	189	$749
HR3060	189	$764
HR3066	189	$785
HR3072	189	$801
HR3648	189	$785
HR3660	189	$848
HR3672	189	$910
HT2448	189	$692
HT3048	189	$744
HU3970	162	$931
KB3312D	285	$401
KB3312E	285	$448
LATH36521	287	$6,478
LATH365211	287	$9,534
LATH36532	287	$10,575
LATH365322	287	$16,806
LATH36543	287	$15,341
LATH365433	287	$23,837
LATH42521	287	$6,972
LATH425211	287	$10,278
LATH42532	287	$11,704
LATH425322	287	$17,907
LATH42543	287	$16,490
LATH425433	287	$25,648
LC101	286	$1,449
LC42D	193	$905

Model No.	Page	List Price
LC42S	193	$905
LC48D	193	$952
LC48S	193	$915
LE24D	193	$645
LE24S	193	$645
LE30D	193	$697
LE30S	193	$697
LE36D	193	$770
LE36S	193	$770
LF1848HK	205	$624
LF1848HR	205	$624
LF1848HT	205	$624
LF1848T	205	$570
LF1860HK	205	$693
LF1860HR	205	$693
LF1860HT	205	$693
LF1860T	205	$624
LF1872HK	205	$732
LF1872HR	205	$732
LF1872HT	205	$732
LF1872T	205	$666
LF23620	161	$1,162
LF2448HK	205	$693
LF2448HR	205	$693
LF2448HT	205	$693
LF2448T	205	$624
LF2460HK	205	$759
LF2460HR	205	$759
LF2460HT	205	$759
LF2460T	205	$693
LF2472HK	205	$814
LF2472HR	205	$814
LF2472HT	205	$814
LF2472T	205	$732
LFU23620	160	$1,124
LT24HK	205	$814
LT24HR	205	$814
LT24HT	205	$814
LT24T	205	$748
LTD72	159	$1,192
LUM13	167	$3,501
LUM14	167	$3,776
LUM15	167	$4,331
M103C	182	$1,411
M103R	182	$986
M103X	182	$1,659
M104C	182	$771
M104S	182	$554
M106C	182	$1,023
M106R	182	$704
M1848HK	201	$799
M1848HR	201	$799
M1848HT	201	$799
M1848T	201	$731
M1860HK	201	$865
M1860HR	201	$865
M1860HT	201	$865
M1860T	201	$786
M1872HK	201	$998
M1872HR	201	$998
M1872HT	201	$998
M1872T	201	$905
M18HK	202	$799

Index

Model No.	Page	List Price
M18HR	202	$799
M18HT	202	$799
M18T	202	$705
M2448HK	201	$865
M2448HR	201	$865
M2448HT	201	$865
M2448T	201	$786
M2460HK	201	$933
M2460HR	201	$933
M2460HT	201	$933
M2460T	201	$839
M2472HK	201	$1,066
M2472HR	201	$1,066
M2472HT	201	$1,066
M2472T	201	$960
M24HK	201,202	$933
M24HR	201,202	$933
M24HT	201,202	$933
M24T	201,202	$839
M3048HK	201	$933
M3048HR	201	$933
M3048HT	201	$933
M3048T	201	$839
M3060HK	201	$998
M3060HR	201	$998
M3060HT	201	$998
M3060T	201	$892
M3072HK	201	$1,133
M3072HR	201	$1,133
M3072HT	201	$1,133
M3072T	201	$1,025
M30HK	202	$1,066
M30HR	202	$1,066
M30HT	202	$1,066
M30T	202	$973
MBC3629	171	$604
MBC3642	171	$800
MBC3668	171	$1,128
MBR2442	169	$434
MBR2448	169	$465
MC24HK	201	$933
MC24HR	201	$933
MC24HT	201	$933
MC24T	201	$839
MC363030	303	$1,676
MC363030D	303	$2,182
MC363030DH	303	$2,420
MC363030H	303	$1,912
MC363630	303	$1,845
MC363630D	303	$2,349
MC363630DH	303	$2,586
MC363630H	303	$2,020
MC483030	303	$1,937
MC483030D	303	$2,546
MC483030DH	303	$2,737
MC483030H	303	$2,184
MC483630	303	$2,222
MC483630D	303	$2,830
MC483630DH	303	$3,074
MC483630H	303	$2,470
MC603030	303	$2,051
MC603030D	303	$2,635
MC603030DH	303	$2,898
MC603030H	303	$2,324
MC603630	303	$2,330
MC603630D	303	$2,899
MC603630DH	303	$3,153
MC603630H	303	$2,597
MC723030	303	$2,295
MC723030D	303	$2,916
MC723030DH	303	$3,211
MC723030H	303	$2,591
MC723630	303	$2,603
MC723630D	303	$3,214
MC723630DH	303	$3,510
MC723630H	303	$2,896
MCD1	173	$105
MCM	268	$56
MCM361	268	$128
MCM421	268	$146
MCM481	268	$162
MCR2466	169	$892
MCR2472	169	$911
MCTDB3672	172	$1,619
MCTDB48120	172	$3,659
MCTDB48144	172	$3,783
MCTDB4896	172	$2,443
MCU243636	168	$727
MCU6	177	$3,313
MCUB6	177	$3,313
MDBDK3672	174	$3,040
MDK3066	168	$1,300
MDK3672	168	$1,452
MDKS3066	168	$1,285
MDKS3672	168	$1,438
MDPDK3672	174	$3,040
MDV	269	$85
MEL5	174	$3,539
MEL6	176	$2,380
MELB5	174	$3,539
MELB6	176	$2,380
MEU1	175	$5,823
MEU2	177	$4,664
MEU3	175	$4,321
MEU4	176	$3,162
MEUB1	175	$5,823
MEUB2	177	$4,664
MEUB3	175	$4,321
MEUB4	176	$3,162
MFD36	267	$66
MFD4	267	$63
MFD42	267	$71
MFD48	267	$73
MGDG	96	$895
MHDC2072	169	$1,961
MHDC3620	169	$1,142
MHUD3970	171	$1,473
MHUG3970	171	$1,502
MLF23624	170	$1,397
MLFU23624	169	$1,302
MLFUT23624	169	$278
MLT	172	$345
MMPSU1930	170	$1,579
MMPSUT1930	170	$225
MNBBF	95	$440
MNBDG	95	$335
MNBDGL	94	$335
MNBDGR	94	$335
MNC10	97	$1,495
MNC12	97	$1,789
MNC14	97	$2,083
MNC8	97	$1,095
MNCNZ63	94	$390
MNCNZ72	94	$435
MNCR48	97	$595
MND63	94	$635
MND72	94	$670
MNDS63	95	$635
MNDS72	95	$670
MNEXTL	95	$405
MNEXTR	94	$405
MNFF	95	$405
MNH63	95	$665
MNH72	95	$775
MNPB	95	$675
MNPO	97	$110
MNRBBF	95	$440
MNRFF	97	$405
MNRS	97	$2,516
MNRSBB	97	$3,396
MNRSBF	97	$3,361
MNRSLBB	97	$4,124
MNRSLBF	97	$4,089
MNRT	95	$344
MNRTPL	94	$715
MNRTPR	94	$715
MNT1	98	$1,927
MNT10	100	$3,362
MNT13	100	$3,672
MNT15	100	$3,767
MNT16	101	$3,767
MNT2	98	$1,927
MNT29	101	$3,262
MNT3	98	$2,237
MNT30	101	$3,262
MNT31	101	$3,452
MNT32	102	$3,452
MNT33	102	$2,857
MNT34	102	$2,857
MNT35	102	$3,047
MNT36	103	$3,047
MNT37	103	$2,927
MNT38	103	$3,117
MNT39	104	$3,452
MNT4	98	$1,962
MNT40	104	$3,262
MNT41	104	$3,042
MNT42	104	$5,881
MNT5	99	$1,962
MNT6	99	$2,272
MNT7	99	$2,897
MNT8	99	$2,897
MNT9	100	$3,362
MO36C	269	$473
MO42C	269	$550
MO48C	269	$574
MOD48	208	$216
MOD60	208	$229
MOD72	208	$257

Index

Model No.	Page	List Price
MODTT	208	$243
MOS36	270	$217
MOS42	270	$234
MOS48	270	$241
MOT2424	172,183	$636
MOT2448	172,183	$762
MPBBF22	170	$699
MPBBF28	170	$794
MPCTL4272	168	$1,366
MPCTR4272	168	$1,366
MPFF22	170	$699
MPFF28	170	$794
MPT3672	168	$1,087
MR3601	268	$146
MR3602	268	$292
MR3603	268	$438
MR4201	268	$150
MR4202	268	$306
MR4203	268	$459
MR4801	268	$158
MR4802	268	$312
MR4803	268	$473
MRD362	269	$610
MRD422	269	$649
MRD482	269	$682
MRF362	268	$423
MRF422	268	$430
MRF482	268	$433
MRP362	269	$499
MRP422	269	$551
MRP482	269	$569
MRRT2448	172	$1,072
MRS36	267	$428
MRS42	267	$442
MRS48	267	$458
MRS7278D	172	$3,205
MRSBB	172	$4,898
MRSBF	172	$4,898
MRSRBB	172	$5,875
MRSRBF	172	$5,875
MRSTGLASS	172	$542
MRT2436	169	$552
MRT2448	169	$594
MRTA2436	172	$565
MRTDB42	172	$1,238
MRTDB48	172	$1,525
MS3601	267	$101
MS3602	267	$189
MS3603	267	$276
MS4201	267	$109
MS4202	267	$213
MS4203	267	$312
MS4801	267	$126
MS4802	267	$223
MS4803	267	$337
MSC	96	$692
MSP1	268	$214
MSP2	268	$234
MSPV	268,275	$179
MT2454HK	201	$879
MT2454HR	201	$879
MT2454HT	201	$879
MT2454T	201	$799

Model No.	Page	List Price
MVB5	96	$585
MVBQ2	96	$215
MVLC	96	$970
MVLF	96	$835
MW42ADA	46	$929
MW42ADS	46	$1,349
MW42AOP	46	$899
MW42AOS	46	$1,299
MW42SDA	46	$1,329
MW42SDS	46	$1,749
MW42SOP	46	$1,299
MW42SOS	46	$1,699
MW84ADA	46	$1,129
MW84ADS	46	$1,549
MW84AOP	46	$1,099
MW84AOS	46	$1,499
MW84SDA	46	$1,529
MW84SDS	46	$1,949
MW84SOP	46	$1,499
MW84SOS	46	$1,899
MWD	267	$182
MWD3624	171	$1,598
NBBF	140	$903
NBDGL	140	$714
NBDGR	140	$714
NC10	143	$3,224
NC12	143	$5,256
NC14	143	$5,502
NC18	143	$7,853
NC20	143	$8,098
NC24	143	$10,450
NC26	143	$10,694
NC30	143	$13,047
NC6	143	$1,832
NC8	143	$2,278
NCD	140	$245
NCNZ63	139	$1,135
NCNZ72	139	$1,223
NCR48	143	$1,514
ND63	139	$1,310
ND72	139	$1,416
NEXTL	139	$601
NEXTR	139	$601
NFF	140	$860
NH63	140	$2,439
NH72	140	$2,584
NHTR63	140	$219
NHTR72	140	$219
NRS	142	$3,228
NRSBB	142	$5,179
NRSBF	142	$5,150
NRSLBA	142	$4,803
NRSLBB	142	$6,764
NRSLBF	142	$6,752
NRSLFF	142	$6,723
NRTNA	142	$477
NRTPL	139	$1,324
NRTPR	139	$1,324
NT1	144	$3,480
NT11	145	$9,669
NT15	145	$6,947
NT17	146	$11,488
NT20	146	$13,753

Model No.	Page	List Price
NT29	146	$7,566
NT3	144	$4,203
NT32	146	$7,905
NT33	147	$6,965
NT35	147	$7,304
NT37	147	$7,111
NT5	144	$3,586
NT6	144	$4,309
NT64	148	$6,573
NT65	148	$5,972
NT66	148	$6,422
NT67	148	$6,276
NT7	145	$5,299
NT9	145	$6,813
NTR	182	$889
NTS	182	$629
OT2424	163,183	$594
OT2448	163,183	$711
P3018HK	201,203,205,207	$253
P3018HR	201,203,205,207	$253
P3018HT	201,203,205,207	$253
P3018T	201,203,205,207	$226
P3024HK	201,203,205,207	$253
P3024HR	201,203,205,207	$253
P3024HT	201,203,205,207	$253
P3024T	201,203,205,207	$226
P3030HK	202,203,207	$253
P3030HR	202,203,207	$253
P3030HT	202,203,207	$253
P3030T	202,203,207	$226
P6018HK	201,203,205,207	$265
P6018HR	201,203,205,207	$265
P6018HT	201,203,205,207	$265
P6018T	201,203,205,207	$238
P6024HK	201,203,205,207	$265
P6024HR	201,203,205,207	$265
P6024HT	201,203,205,207	$265
P6024T	201,203,205,207	$238
P6030HK	202,203,207	$265
P6030HR	202,203,207	$265
P6030HT	202,203,207	$265
P6030T	202,203,207	$238
P9018HK	201,203,205,207	$280
P9018HR	201,203,205,207	$280
P9018HT	201,203,205,207	$280
P9018T	201,203,205,207	$253
P9024HK	201,203,205,207	$280
P9024HR	201,203,205,207	$280
P9024HT	201,203,205,207	$280
P9024T	201,203,205,207	$253
P9030HK	201,203,205,207	$280
P9030HR	201,203,205,207	$280
P9030HT	201,203,205,207	$280
P9030T	201,203,205,207	$253
PBBF19	161	$598
PBBF22	161	$652
PBBFT19	161	$711
PFF19	161	$598
PFF22	161	$652
PM20	44,72,73,74,178,222	$305
PM22	44,72,73,74,178,222	$464
PM44	178	$928
PMR22	97,178,222	$194

Index

Model No.	Page	List Price
PMR30	178,222	$204
PR	231	$816
PR1848	190	$941
PR1860	190	$1,004
PR1872	190	$1,030
PR2436	190	$941
PR2442	190	$983
PR2448	190	$988
PR2454	190	$1,024
PR2460	190	$1,045
PR2466	190	$1,076
PR2472	190	$1,113
PR3036	191	$1,024
PR3048	191	$1,045
PR3054	191	$1,097
PR3060	191	$1,128
PR3066	191	$1,149
PR3072	191	$1,165
PR3648	191	$1,118
PR3660	191	$1,201
PR3672	191	$1,238
PRA4818HK	207	$408
PRA4818HR	207	$408
PRA4818HT	207	$408
PRA4818T	207	$365
PRA4824HK	207	$474
PRA4824HR	207	$474
PRA4824HT	207	$474
PRA4824T	207	$435
PRA4830HK	207	$501
PRA4830HR	207	$501
PRA4830HT	207	$501
PRA4830T	207	$446
PRA6018HK	207	$435
PRA6018HR	207	$435
PRA6018HT	207	$435
PRA6018T	207	$392
PRA6024HK	207	$501
PRA6024HR	207	$501
PRA6024HT	207	$501
PRA6024T	207	$461
PRA6030HK	207	$542
PRA6030HR	207	$542
PRA6030HT	207	$542
PRA6030T	207	$488
PRA7218HK	207	$515
PRA7218HR	207	$515
PRA7218HT	207	$515
PRA7218T	207	$461
PRA7224HK	207	$583
PRA7224HR	207	$583
PRA7224HT	207	$583
PRA7224T	207	$528
PRA7230HK	207	$597
PRA7230HR	207	$597
PRA7230HT	207	$597
PRA7230T	207	$542
PRS4818HK	207	$597
PRS4818HR	207	$597
PRS4818HT	207	$597
PRS4818T	207	$542
PRS4824HK	207	$666
PRS4824HR	207	$666
PRS4824HT	207	$666
PRS4824T	207	$597
PRS4830HK	207	$678
PRS4830HR	207	$678
PRS4830HT	207	$678
PRS4830T	207	$610
PRS6018HK	207	$610
PRS6018HR	207	$610
PRS6018HT	207	$610
PRS6018T	207	$542
PRS6024HK	207	$678
PRS6024HR	207	$678
PRS6024HT	207	$678
PRS6024T	207	$610
PRS6030HK	207	$720
PRS6030HR	207	$720
PRS6030HT	207	$720
PRS6030T	207	$651
PRS7218HK	207	$638
PRS7218HR	207	$638
PRS7218HT	207	$638
PRS7218T	207	$583
PRS7224HK	207	$701
PRS7224HR	207	$701
PRS7224HT	207	$701
PRS7224T	207	$638
PRS7230HK	207	$732
PRS7230HR	207	$732
PRS7230HT	207	$732
PRS7230T	207	$666
PT2448	191	$988
PT3048	191	$1,045
PT3672	159	$1,032
PTA18HK	208	$408
PTA18HR	208	$408
PTA18HT	208	$408
PTA18T	208	$338
PTA24HK	208	$597
PTA24HR	208	$597
PTA24HT	208	$597
PTA24T	208	$542
PTA30HK	208	$678
PTA30HR	208	$678
PTA30HT	208	$678
PTA30T	208	$638
PTS18HK	208	$597
PTS18HR	208	$597
PTS18HT	208	$597
PTS18T	208	$542
PTS24HK	208	$666
PTS24HR	208	$666
PTS24HT	208	$666
PTS24T	208	$610
PTS30HK	208	$747
PTS30HR	208	$747
PTS30HT	208	$747
PTS30T	208	$705
Q618	60	$20
R104BP	65,212	$1,785
R104BPN	65,212	$1,746
R104BS	65,212	$1,710
R104BSN	65,212	$1,674
R104RP	65,212	$1,785
R104RPN	65,212	$1,746
R104RS	65,212	$1,710
R104RSN	65,212	$1,674
R104VP	65,212	$1,785
R104VPN	65,212	$1,746
R104VS	65,212	$1,710
R104VSN	65,212	$1,674
R105BP	65,212	$1,919
R105BPN	65,212	$1,883
R105BS	65,212	$1,845
R105BSN	65,212	$1,810
R105RP	65,212	$1,919
R105RPN	65,212	$1,883
R105RS	65,212	$1,845
R105RSN	65,212	$1,810
R105VP	65,212	$1,919
R105VPN	65,212	$1,883
R105VS	65,212	$1,845
R105VSN	65,212	$1,810
R124BP	65,212	$2,050
R124BPN	65,212	$2,013
R124BS	65,212	$1,977
R124BSN	65,212	$1,939
R124RP	65,212	$2,050
R124RPN	65,212	$2,013
R124RS	65,212	$1,977
R124RSN	65,212	$1,939
R124VP	65,212	$2,050
R124VPN	65,212	$2,013
R124VS	65,212	$1,977
R124VSN	65,212	$1,939
R125BP	65,212	$2,159
R125BPN	65,212	$2,124
R125BS	65,212	$2,086
R125BSN	65,212	$2,050
R125RP	65,212	$2,159
R125RPN	65,212	$2,124
R125RS	65,212	$2,086
R125RSN	65,212	$2,050
R125VP	65,212	$2,159
R125VPN	65,212	$2,124
R125VS	65,212	$2,086
R125VSN	65,212	$2,050
R73BP	65,212	$1,392
R73BPN	65,212	$1,354
R73BS	65,212	$1,298
R73BSN	65,212	$1,203
R73RP	65,212	$1,392
R73RPN	65,212	$1,354
R73RS	65,212	$1,298
R73RSN	65,212	$1,203
R73VP	65,212	$1,392
R73VPN	65,212	$1,354
R73VS	65,212	$1,298
R73VSN	65,212	$1,203
R84BP	65,212	$1,518
R84BPN	65,212	$1,482
R84BS	65,212	$1,464
R84BSN	65,212	$1,428
R84RP	65,212	$1,518
R84RPN	65,212	$1,482
R84RS	65,212	$1,464
R84RSN	65,212	$1,428

Index

Model No.	Page	List Price
R84VP	65,212	$1,518
R84VPN	65,212	$1,482
R84VS	65,212	$1,464
R84VSN	65,212	$1,428
R94BP	65,212	$1,555
R94BPN	65,212	$1,519
R94BS	65,212	$1,500
R94BSN	65,212	$1,464
R94RP	65,212	$1,555
R94RPN	65,212	$1,519
R94RS	65,212	$1,500
R94RSN	65,212	$1,464
R94VP	65,212	$1,555
R94VPN	65,212	$1,519
R94VS	65,212	$1,500
R94VSN	65,212	$1,464
R95BP	65,212	$1,595
R95BPN	65,212	$1,556
R95BS	65,212	$1,537
R95BSN	65,212	$1,500
R95RP	65,212	$1,595
R95RPN	65,212	$1,556
R95RS	65,212	$1,537
R95RSN	65,212	$1,500
R95VP	65,212	$1,595
R95VPN	65,212	$1,556
R95VS	65,212	$1,537
R95VSN	65,212	$1,500
REALCC0311	108,135,143, 164,173	$21
REALCC0311B	119,154	$21
REALCC0312	108,135,143, 164,173	$21
REALCC0312B	119,154	$21
REALCC0313	108,135,143, 164,173	$21
REALCC0313B	119,154	$21
REALCC0314	108,135,143, 164,173	$21 $21
REALCC0314B	119,154	$21
REALCC0315	108,135,143, 164,173	$21
REALCC0315B	119,154	$21
REALCC0316	108,135,143, 164,173	$21
REALCC0316B	119,154	$21
REALCC0317	108,135,143, 164,173	$21
REALCC0317B	119,154	$21
REALCC0318	108,135,143, 164,173	$21
REALCC0318B	119,154	$21
REALCC0319	108,135,143, 164,173	$21
REALCC0319B	119,154	$21
REALCC0320	108,135,143, 164,173	$21
REALCC0320B	119,154	$21
REALCC0321	108,135,143, 164,173	$21
REALCC0321B	119,154	$21
REALCC0322	108,135,143, 164,173	$21
REALCC0322B	119,154	$21
REALCC0323	108,135,143, 164,173	$21
REALCC0323B	119,154	$21
REALCC0324	108,135,143, 164,173	$21
REALCC0324B	119,154	$21
REALCC0325	108,135,143, 164,173	$21
REALCC0325B	119,154	$21
REALCMK	108,119,135, 143, 154,164,173	$21
REALCRK	108,119,135,143, 154,164,173	$22
REALS010	179	$18
REALS011	179	$18
REALS099	178	$24
REALS100	44,178	$24
REALS104	178	$20
REALS191	179	$18
REALS276	178	$20
REALS277	178	$20
REALS281	179	$18
REALS282	179	$18
REALS283	179	$20
REALS284	179	$20
REALS285	179	$20
REALS286	179	$20
REALS287	179	$16
REALS288	179	$15
RF36	349	$259
RF60	349	$272
RRT2448	163	$1,062
RS7278D	163	$2,824
RSBB	163	$4,231
RSBF	163	$4,231
RSRBB	163	$5,293
RSRBF	163	$5,293
RSTGLASS	163	$536
RT2436	160	$517
RT2448	160	$527
RT36	162	$743
RT42	162	$775
RTA2436	163	$530
RTT1	215,337	$7,774
RTT2	337	$3,130
SA3680E1	296	$2,257
SA3680E1LAM	296	$2,428
SA3680G1	296	$3,514
SA3680G1LAM	296	$3,619
SA3680L1	296	$3,357
SA3680L1LAM	296	$3,526
SB5	152	$1,609
SB7241	296	$2,193
SBQ5	152	$1,245
SBUF	152	$3,567
SC10	154	$4,382
SC12	154	$6,321
SC18	154	$9,482
SC24	154	$12,642
SC2424CP	290	$1,910
SC2424E	290	$936
SC2424EP	290	$1,779
SC2424G	290	$1,265
SC2433CP	290	$2,232
SC2433CPL	292	$1,995
SC2433E	290	$1,068
SC2433EL	292	$1,068
SC2433EP	290	$1,779
SC2433EPL	292	$1,864
SC2433G	290	$1,569
SC2433GL	292	$1,392
SC2441CP	290	$2,582
SC2441CPH	292	$2,265
SC2441CPL	292	$2,482
SC2441E	290	$1,241
SC2441EH	292,306	$1,174
SC2441EL	292	$1,174
SC2441EP	290	$2,047
SC2441EPH	292	$1,898
SC2441EPL	292	$1,995
SC2441G	290	$1,762
SC2441GH	292	$1,570
SC2441GL	292	$1,741
SC2448CP	290	$2,902
SC2448CPH	292	$2,365
SC2448CPL	292	$3,019
SC2448E	290	$1,299
SC2448EH	292	$1,258
SC2448EL	292	$1,258
SC2448EP	290	$2,182
SC2448EPH	292	$2,064
SC2448EPL	292	$2,349
SC2448G	290	$1,931
SC2448GH	292	$1,851
SC2448GL	292	$1,931
SC30	154	$15,803
SC3624CP	290	$2,748
SC3624E	290	$989
SC3624EP	290	$2,283
SC3624G	290	$1,325
SC3633CP	290	$3,473
SC3633CPL	292	$2,685
SC3633E	290	$1,258
SC3633EL	292	$1,174
SC3633EP	290	$2,434
SC3633EPL	292	$2,399
SC3633G	290	$1,744
SC3633GL	292	$1,560
SC3641CP	290	$3,574
SC3641CPH	292	$2,956
SC3641CPL	292	$3,288
SC3641E	290	$1,091
SC3641EH	292	$1,309
SC3641EL	292	$1,309
SC3641EP	290	$2,669
SC3641EPH	292	$2,468
SC3641EPL	292	$2,582
SC3641G	290	$1,845
SC3641GH	292	$1,676
SC3641GL	292	$2,013
SC3648CP	290	$4,160
SC3648CPH	292	$3,288
SC3648CPL	292	$3,859
SC3648E	290	$1,341
SC3648EH	292	$1,425

Index

Model No.	Page	List Price
SC3648EL	292	$1,425
SC3648EP	290	$2,818
SC3648EPH	292	$2,600
SC3648EPL	292	$2,851
SC3648G	290	$2,132
SC3648GH	292	$2,185
SC3648GL	292	$2,265
SC4824CP	291	$3,288
SC4824E	291	$1,166
SC4824EP	291	$2,836
SC4824G	291	$1,911
SC4833CP	291	$3,893
SC4833CPL	293	$3,389
SC4833E	291	$1,322
SC4833EL	293	$1,322
SC4833EP	291	$3,019
SC4833EPL	293	$2,956
SC4833G	291	$2,324
SC4833GL	293	$1,973
SC4841CP	291	$4,616
SC4841CPH	293	$3,626
SC4841CPL	291	$4,030
SC4841E	293	$1,393
SC4841EH	291	$1,508
SC4841EL	293	$1,508
SC4841EP	291	$3,357
SC4841EPH	293	$3,038
SC4841EPL	291	$3,188
SC4841G	293	$2,616
SC4841GH	291	$2,090
SC4841GL	293	$2,508
SC4848CP	291	$5,255
SC4848CPH	293	$4,079
SC4848CPL	291	$4,699
SC4848E	293	$1,695
SC4848EH	291	$1,595
SC4848EL	293	$1,595
SC4848EP	291	$3,556
SC4848EPH	293	$3,253
SC4848EPL	291	$3,524
SC4848G	293	$3,212
SC4848GH	291	$2,685
SC4848GL	293	$3,058
SC6	154	$2,721
SC6024CP	291	$3,946
SC6024E	291	$1,256
SC6024EP	291	$3,323
SC6024G	291	$2,184
SC6033CP	291	$4,834
SC6033CPL	293	$4,046
SC6033E	291	$1,375
SC6033EL	293	$1,461
SC6033EP	291	$3,574
SC6033EPL	293	$3,459
SC6033G	291	$2,751
SC6033GL	293	$2,314
SC6041CP	291	$5,590
SC6041CPH	293	$3,737
SC6041CPL	291	$4,868
SC6041E	293	$1,509
SC6041EH	291	$1,595
SC6041EL	293	$1,595
SC6041EP	291	$3,960

Model No.	Page	List Price
SC6041EPH	293	$3,524
SC6041EPL	291	$3,726
SC6041G	293	$3,163
SC6041GH	291	$2,489
SC6041GL	293	$2,934
SC6048CP	291	$6,292
SC6048CPH	293	$5,020
SC6048CPL	293	$5,707
SC6048E	291	$1,899
SC6048EH	293	$1,676
SC6048EL	293	$1,676
SC6048EP	291	$4,229
SC6048EPH	2293	$3,809
SC6048EPL	293	$4,128
SC6048G	291	$3,719
SC6048GH	293	$3,115
SC6048GL	293	$3,409
SC7224CP	219	$4,646
SC7224E	219	$1,439
SC7224EP	291	$3,877
SC7224G	291	$2,591
SC7233CP	291	$5,590
SC7233CPL	293	$4,783
SC7233E	291	$1,509
SC7233EL	293	$1,577
SC7233EP	291	$4,180
SC7233EPL	293	$4,046
SC7233G	291	$3,252
SC7233GL	293	$2,697
SC7241CP	291	$6,647
SC7241CPH	293	$4,849
SC7241CPL	293	$5,707
SC7241E	291	$1,875
SC7241EH	293	$1,676
SC7241EL	293	$1,676
SC7241EP	291	$4,646
SC7241EPH	293	$4,128
SC7241EPL	293	$4,362
SC7241G	291	$3,696
SC7241GH	293	$2,972
SC7241GL	293	$3,537
SC7248CP	291	$7,603
SC7248CPH	293	$5,792
SC7248CPL	293	$6,714
SC7248E	291	$1,991
SC7248EH	293	$1,845
SC7248EL	293	$1,845
SC7248EP	291	$4,951
SC7248EPH	293	$4,446
SC7248EPL	293	$4,800
SC7248G	291	$4,368
SC7248GH	293	$3,662
SC7248GL	293	$3,811
SC8	154	$3,132
SCBB72	149	$3,160
SCBF72	149	$3,077
SCC	227	$53
SCC4	227	$44
SCD	149	$392
SCFF72	149	$2,994
SCFT	153,183	$728
SCR48	154	$1,690
SCWB	154	$1,748

Model No.	Page	List Price
SDBBB72	149	$3,707
SDBBF72	149	$3,624
SDSBB72	149	$3,511
SDSBF72	149	$3,428
SET	153,183	$531
SF3665BG1	297	$3,453
SF3665BL1	297	$3,131
SF3665DG1	297	$3,277
SF3665DL1	297	$3,003
SF3680BG1	297	$3,963
SF3680BL1	297	$3,666
SF3680DG1	297	$3,706
SF3680DL1	297	$3,468
SHA72	152	$2,588
SHGD	152	$314
SHH	152	$504
SHV	152	$504
SHWD	152	$314
SLC	152	$2,211
SLF2	152	$1,834
SLF4	308	$3,134
SLF48	308	$181
SLLBBB72	151	$4,684
SLLBBF72	151	$4,586
SLLSBB72	151	$4,488
SLLSBF72	151	$4,390
SLRBBB72	151	$4,684
SLRBBF72	151	$4,586
SLRSBB72	151	$4,488
SLRSBF72	151	$4,390
SN4824E	294	$1,160
SN4824EP	294	$2,569
SN4833C	294	$2,164
SN4833CL	295	$1,910
SN4833CLP	295	$3,459
SN4833CP	294	$2,902
SN4833E	294	$1,296
SN4833EL	295	$1,296
SN4833ELP	295	$2,769
SN4833EP	294	$2,701
SN4841C	294	$2,591
SN4841CH	295	$2,157
SN4841CHP	295	$3,474
SN4841CL	295	$2,374
SN4841CLP	295	$3,828
SN4841CP	294	$3,692
SN4841E	294	$1,409
SN4841EH	295	$1,409
SN4841EHP	295	$2,851
SN4841EL	295	$1,539
SN4841ELP	295	$2,936
SN4841EP	294	$3,038
SN4848C	294	$3,034
SN4848CH	295	$2,471
SN4848CHP	295	$3,859
SN4848CL	295	$2,848
SN4848CLP	295	$4,430
SN4848CP	294	$4,329
SN4848E	294	$1,477
SN4848EH	295	$1,459
SN4848EHP	295	$2,969
SN4848EL	295	$1,642
SN4848ELP	295	$3,253

Index

Model No.	Page	List Price
SN4848EP	294	$3,122
SN6024E	294	$1,199
SN6024EP	294	$3,019
SN6033C	294	$2,554
SN6033CL	295	$2,234
SN6033CLP	295	$4,079
SN6033CP	294	$3,692
SN6033E	294	$1,318
SN6033EL	295	$1,247
SN6033ELP	295	$3,241
SN6033EP	294	$3,171
SN6041C	294	$2,958
SN6041CH	295	$2,501
SN6041CHP	295	$4,112
SN6041CL	295	$2,789
SN6041CLP	295	$4,498
SN6041CP	294	$4,314
SN6041E	294	$1,598
SN6041EH	295	$1,477
SN6041EHP	295	$3,274
SN6041EL	295	$1,598
SN6041ELP	295	$3,389
SN6041EP	294	$3,609
SN6048C	294	$3,616
SN6048CH	295	$3,018
SN6048CHP	295	$4,530
SN6048CL	295	$3,059
SN6048CLP	295	$5,170
SN6048CP	294	$5,371
SN6048E	294	$1,676
SN6048EH	295	$1,736
SN6048EHP	295	$3,440
SN6048EL	295	$1,509
SN6048ELP	295	$3,859
SN6048EP	294	$3,692
SN7224E	294	$1,343
SN7224EP	294	$3,508
SN7233C	294	$2,864
SN7233CL	295	$2,638
SN7233CLP	295	$4,783
SN7233CP	294	$4,634
SN7233E	294	$1,508
SN7233EL	295	$1,508
SN7233ELP	295	$3,692
SN7233EP	294	$3,709
SN7241C	294	$3,473
SN7241CH	295	$2,888
SN7241CHP	295	$4,800
SN7241CL	295	$3,194
SN7241CLP	295	$5,371
SN7241CP	294	$5,033
SN7241E	294	$1,762
SN7241EH	295	$1,765
SN7241EHP	295	$3,692
SN7241EL	295	$1,765
SN7241ELP	295	$3,859
SN7241EP	294	$4,213
SN7248C	294	$4,153
SN7248CH	295	$3,382
SN7248CHP	295	$5,371
SN7248CL	295	$3,515
SN7248CLP	295	$6,044
SN7248CP	294	$6,044

Model No.	Page	List Price
SN7248E	294	$1,845
SN7248EH	295	$1,866
SN7248EHP	295	$3,859
SN7248EL	295	$1,676
SN7248ELP	295	$4,362
SN7248EP	294	$4,314
SPM	65,112,122,143,216	$284
SR2446R	308	$884
SR4833	308	$1,114
SR4833R	308	$888
SR4846R	308	$1,378
SR6033	308	$1,172
SR6033R	308	$902
SR6046R	308	$1,461
SRCD	153	$5,045
SRCDAL	153	$5,085
SRCDAR	153	$5,085
SRCDM	153	$6,549
SRCDMAL	153	$7,246
SRCDMAR	153	$7,246
SRCSL	153	$6,664
SRCSLM	153	$8,168
SRCSR	153	$6,664
SRCSRM	153	$8,168
SRF3837	309	$401
SRF3871	309	$709
SRFC3871	309	$788
SRT4280A	309	$1,433
SRT4280B	309	$2,266
SRT4280C	309	$2,051
SRTD4280A	309	$2,029
SRTD4280B	309	$2,745
SS12LC	270	$28
SS24GM01	274,299	$57
SS24GM02	299	$116
SS24GM03	299	$173
SS24GM04	299	$233
SS24GM05	299	$288
SS24LM01	274,299,306	$47
SS24LM02	299	$93
SS24LM03	299	$140
SS24LM04	299	$190
SS24LM05	299	$235
SS24N01	299	$57
SS24N02	299	$116
SS24N03	299	$173
SS24N04	299	$233
SS24N05	299	$288
SS33GM01	274,299	$68
SS33GM02	299	$136
SS33GM03	299	$196
SS33GM04	299	$270
SS33GM05	299	$333
SS33LM01	274,299	$55
SS33LM02	299	$112
SS33LM03	299	$167
SS33LM04	299	$226
SS33LM05	299	$278
SS33N01	299	$68
SS33N02	299	$136
SS33N03	299	$196
SS33N04	299	$270
SS33N05	299	$333

Model No.	Page	List Price
SS3665	263	$1,210
SS3665ML	263	$1,347
SS3676	263	$1,210
SS3676ML	263	$1,347
SS3688	263	$1,296
SS3688ML	263	$1,432
SS41GM01	274,299	$79
SS41GM02	299	$159
SS41GM03	299	$235
SS41GM04	299	$311
SS41GM05	299	$391
SS41LM01	274,299	$68
SS41LM02	299	$136
SS41LM03	299	$196
SS41LM04	299	$270
SS41LM05	299	$333
SS41N01	299	$79
SS41N02	299	$159
SS41N03	299	$235
SS41N04	299	$311
SS41N05	299	$391
SS4265	263	$1,382
SS4265ML	263	$1,519
SS4276	263	$1,382
SS4276ML	263	$1,519
SS4288	263	$1,435
SS4288ML	263	$1,572
SS4865	263	$1,489
SS4865ML	263	$1,626
SS4876	263	$1,489
SS4876ML	263	$1,626
SS4888	263	$1,539
SS4888ML	263	$1,675
SS48GM01	274,299	$92
SS48GM02	299	$180
SS48GM03	299	$270
SS48GM04	299	$357
SS48GM05	299	$446
SS48LM01	274,299	$79
SS48LM02	299	$159
SS48LM03	299	$235
SS48LM04	299	$311
SS48LM05	299	$391
SS48N01	299	$93
SS48N02	299	$186
SS48N03	299	$270
SS48N04	299	$367
SS48N05	299	$458
SS65GS101	274	$144
SS65LS101	274	$102
SS80GS101	274	$173
SS80LS101	274	$136
SSFA	153,183	$791
ST1	155	$9,778
ST13	157	$10,297
ST14	157	$10,297
ST17	157	$8,325
ST18	157	$8,325
ST2	155	$9,778
ST21	158	$6,756
ST23	158	$6,673
ST3	155	$9,582
ST4	155	$9,582

Index

Model No.	Page	List Price
ST5	156	$9,695
ST6	156	$9,695
ST7	156	$9,499
ST8	156	$9,499
STD72	149	$1,735
SULBBB72	150	$6,182
SULBBF72	150	$6,099
SULSBB72	150	$5,986
SULSBF72	150	$5,903
SURBBB72	150	$6,182
SURBBF72	150	$6,099
SURSBB72	150	$5,986
SURSBF72	150	$5,903
SW1	306	$3,683
SWRD	152	$1,652
SY1848HK	203	$686
SY1848HR	203	$686
SY1848HT	203	$686
SY1848T	203	$627
SY1854HK	203	$724
SY1854HR	203	$724
SY1854HT	203	$724
SY1854T	203	$673
SY1860HK	203	$759
SY1860HR	203	$759
SY1860HT	203	$759
SY1860T	203	$686
SY1866HK	203	$776
SY1866HR	203	$776
SY1866HT	203	$776
SY1866T	203	$710
SY1872HK	203	$806
SY1872HR	203	$806
SY1872HT	203	$806
SY1872T	203	$730
SY2448HK	203	$759
SY2448HR	203	$759
SY2448HT	203	$759
SY2448T	203	$686
SY2454HK	203	$802
SY2454HR	203	$802
SY2454HT	203	$802
SY2454T	203	$731
SY2460HK	203	$837
SY2460HR	203	$837
SY2460HT	203	$837
SY2460T	203	$759
SY2466HK	203	$879
SY2466HR	203	$879
SY2466HT	203	$879
SY2466T	203	$788
SY2472HK	203	$896
SY2472HR	203	$896
SY2472HT	203	$896
SY2472T	203	$806
SY3048HK	203	$837
SY3048HR	203	$837
SY3048HT	203	$837
SY3048T	203	$747
SY3054HK	203	$875
SY3054HR	203	$875
SY3054HT	203	$875
SY3054T	203	$783
SY3060HK	203	$911
SY3060HR	203	$911
SY3060HT	203	$911
SY3060T	203	$822
SY3066HK	203	$940
SY3066HR	203	$940
SY3066HT	203	$940
SY3066T	203	$850
SY3072HK	203	$969
SY3072HR	203	$969
SY3072HT	203	$969
SY3072T	203	$879
SYC24HK	203	$853
SYC24HR	203	$853
SYC24HT	203	$853
SYC24T	203	$776
SYP24HK	203	$853
SYP24HR	203	$853
SYP24HT	203	$853
SYP24T	203	$776
SYT24HK	203	$884
SYT24HR	203	$884
SYT24HT	203	$884
SYT24T	203	$823
SYT30HK	203	$909
SYT30HR	203	$909
SYT30HT	203	$909
SYT30T	203	$849
T2GA	278	$318
T2GALAM	278	$414
T2GS	278	$318
T2GSA	278	$318
T2GSALAM	278	$414
T2GSLAM	278	$414
T2LA	278	$318
T2LALAM	278	$414
T2LS	278	$318
T2LSA	278	$318
T2LSALAM	278	$414
T2LSLAM	278	$414
TA120S	74	$10,675
TA42RB	74	$669
TA42RF	74	$648
TA4830A	73	$2,310
TA4830AN	73	$2,117
TA4830AN1	73	$2,455
TA4830AN2	73	$2,601
TA4830S	73	$3,017
TA4830SN	73	$2,824
TA4830SN1	73	$3,162
TA4830SN2	73	$3,308
TA4860A	72	$3,320
TA4860AN	72	$2,834
TA4860AN1	72	$3,509
TA4860AN2	72	$3,802
TA4860S	72	$4,172
TA4860SN	72	$3,705
TA4860SN1	72	$4,381
TA4860SN2	72	$4,672
TA48RB	74	$676
TA48RF	74	$653
TA6030A	73	$2,617
TA6030AN	73	$2,327
TA6030AN1	73	$2,665
TA6030AN2	73	$2,811
TA6030S	73	$3,380
TA6030SN	73	$3,089
TA6030SN1	73	$3,427
TA6030SN2	73	$3,573
TA6060A	72	$3,771
TA6060AN	72	$3,175
TA6060AN1	72	$3,851
TA6060AN2	72	$4,024
TA6060S	72	$4,553
TA6060SN	72	$3,968
TA6060SN1	72	$4,644
TA6060SN2	73	$4,936
TA7230A	73	$2,754
TA7230AN	73	$2,445
TA7230AN1	73	$2,784
TA7230AN2	73	$2,929
TA7230S	73	$3,537
TA7230SN	73	$3,227
TA7230SN1	73	$3,566
TA7230SN2	73	$3,711
TA7260A	72	$3,965
TA7260AN	72	$3,363
TA7260AN1	72	$4,039
TA7260AN2	72	$4,330
TA7260S	72	$4,781
TA7260SN	72	$4,224
TA7260SN1	72	$4,900
TA7260SN2	72	$5,192
TAAP24	80	$184
TAAP30	80	$226
TAAP30D	80	$235
TAAP42	80	$350
TAAP54	80	$581
TAAP5418D	74	$665
TAAP60D	80	$557
TAAP66	80	$590
TAC10BB	84,210	$3,979
TAC10BR	84,210	$3,979
TAC10BT	84,210	$3,979
TAC10TB	85,211	$5,616
TAC10TR	85,211	$5,616
TAC10TT	85,211	$5,616
TAC12BB	84,210	$5,319
TAC12BR	84,210	$5,319
TAC12BT	84,210	$5,319
TAC12TB	85,211	$8,041
TAC12TR	85,211	$8,041
TAC12TT	85,211	$8,041
TAC18BB	84,210	$7,626
TAC18BR	84,210	$7,626
TAC18BT	84,210	$7,626
TAC18TB	85,211	$11,161
TAC18TR	85,211	$11,161
TAC18TT	85,211	$11,161
TAC24BB	84,210	$9,934
TAC24BR	84,210	$9,934
TAC24BT	84,210	$9,934
TAC24TB	85,211	$14,096
TAC24TR	85,211	$14,096
TAC24TT	85,211	$14,096
TAC6BA	84,210	$2,307

Index

Model No.	Page	List Price
TAC6TA	85,211	$3,119
TAC8BB	84,210	$3,184
TAC8BR	84,210	$3,184
TAC8BT	84,210	$3,184
TAC8TB	85,211	$4,489
TAC8TR	85,211	$4,489
TAC8TT	85,211	$4,489
TACMFC	75	$1,750
TACMP	75	$973
TADC120S	74,78	$445
TADC48DA	78	$178
TADC48DS	78	$178
TADC48SA	78	$89
TADC48SS	78	$89
TADC60DA	78	$190
TADC60DS	78	$190
TADC60SA	78	$95
TADC60SS	78	$95
TADC72DA	78	$202
TADC72DS	78	$202
TADC72SA	78	$100
TADC72SS	78	$100
TAECT1	87,213	$445
TAECT2	87,213	$1,066
TAECT3	87,213	$623
TAESC108	77,87,213	$240
TAESC144	77,87,213	$294
TAESC72	74,77,87,213	$186
TAETKD48A	77	$700
TAETKD48S	77	$567
TAETKD60A	74,77	$730
TAETKD60S	74,77	$598
TAETKD72A	77	$748
TAETKD72S	77	$616
TAETKS48A	77	$536
TAETKS48S	77	$404
TAETKS60A	77	$568
TAETKS60S	77	$436
TAETKS72A	77	$586
TAETKS72S	77	$454
TAETP1	79,88,214	$119
TAETP10	79,88,214	$243
TAETP2	79,88,214	$157
TAETP3	79,88,214	$230
TAETP4	79,88,214	$260
TAETP5	79,88,214	$283
TAETP6	79,88,214	$346
TAETP7	79,88,214	$67
TAETP8	79,88,214	$193
TAETP9	79,88,214	$263
TAFP24	81	$497
TAFP30	81	$533
TAFP30D	81	$608
TAFP42	81	$627
TAFP54	81	$735
TAFP60D	81	$918
TAFP66	81	$817
TAM2	74,80,89	$172
TAMDP	74,80,89	$195
TAMSP	74,80,89	$131
TAMST6	86,212	$4,461
TAMSTE6	86,212	$5,551
TAMT6	86,212	$4,056

Model No.	Page	List Price
TAMTE6	86,212	$5,146
TAST51LB	76	$1,432
TAST51LF	74,76	$1,482
TAST51RB	76	$1,432
TAST51RF	76	$1,482
TAST51WLB	76	$2,242
TAST51WLF	76	$2,165
TAST51WRB	76	$2,242
TAST51WRF	76	$2,165
TB30	308	$732
TB48	308	$771
TB60	308	$1,020
TCNR	303	$774
TCNRLAM	303	$1,036
TGWC	278	$653
TGWC01	278	$653
TLWC	278	$496
TLWC01	278	$496
TP48	302	$2,224
TP48LAM	302	$2,469
TP60	302	$2,444
TP60LAM	302	$2,711
TP72	302	$3,096
TP72LAM	302	$3,390
TR60LR	302	$3,260
TR60LRLAM	302	$3,532
TR60LS	302	$3,186
TR60LSLAM	302	$3,461
TR60NR	302	$2,731
TR60NRLAM	302	$3,003
TR60NS	302	$2,661
TR60NSLAM	302	$2,862
TR72LR	302	$3,524
TR72LRLAM	302	$3,817
TR72LS	302	$3,453
TR72LSLAM	302	$3,757
TR72NR	302	$2,957
TR72NRLAM	302	$3,253
TR72NS	302	$2,881
TR72NSLAM	302	$3,183
TRANT1	82	$14,289
TRANT2	82	$14,406
TRANT3	82	$16,060
TRANT4	82	$8,913
TRANT5	83	$9,383
TRANT6	83	$10,977
TRANT7	83	$21,859
TSA3630	301	$1,611
TSA3630D	301	$2,047
TSA3630DH	301	$2,285
TSA3630H	301	$1,849
TSA3636	301	$1,847
TSA3636D	301	$2,309
TSA3636DH	301	$2,548
TSA3636H	301	$2,110
TSA4830	301	$1,782
TSA4830D	301	$2,292
TSA4830DH	301	$2,535
TSA4830H	301	$2,021
TSA4836	301	$2,086
TSA4836D	301	$2,579
TSA4836DH	301	$2,819
TSA4836H	301	$2,309

Model No.	Page	List Price
TSA6030	301	$2,008
TSA6030D	301,306	$2,555
TSA6030DH	301	$2,815
TSA6030H	301	$2,274
TSA6036	301	$2,324
TSA6036D	301	$2,872
TSA6036DH	301	$3,137
TSA6036H	301	$2,584
TSA7230	301	$2,244
TSA7230D	301	$2,817
TSA7230DH	301	$3,114
TSA7230H	301	$2,541
TSA7236	301	$2,582
TSA7236D	301	$3,148
TSA7236DH	301	$3,445
TSA7236H	301	$2,879
TSC2	234	$698
TSH1	226	$906
TSH1F10	226	$1,612
TSH1F2	226	$1,114
TSH1F3	226	$1,176
TSH1F4	226	$1,238
TSH1F5	226	$1,300
TSH1F6	226	$1,362
TSH1F7	226	$1,426
TSH1F8	226	$1,488
TSH1F9	226	$1,550
TSH1FX	226	$1,222
TSH2	226	$874
TSH2F10	226	$1,582
TSH2F2	226	$1,082
TSH2F3	226	$1,144
TSH2F4	226	$1,206
TSH2F5	226	$1,270
TSH2F6	226	$1,332
TSH2F7	226	$1,394
TSH2F8	226	$1,456
TSH2F9	226	$1,518
TSH2FX	226	$1,190
TSH3	227	$628
TSK3630	304	$237
TSK3636	304	$267
TSK4830	304	$259
TSK4836	304	$299
TSK6030	304	$274
TSK6036	304	$316
TSK7230	304	$292
TSK7236	304	$333
TSM2	227	$606
TSS2	234	$936
TW1	312	$7,348
TW2	312	$7,039
TW3	312	$6,437
TW30	302,306	$1,127
TW30LAM	302,306	$1,253
TW36	302,306	$1,292
TW36LAM	302	$1,530
TW4	312	$5,944
TW48	302	$1,375
TW48LAM	302	$1,616
TW5	313	$3,634
TW6	313	$3,338
TW60	302	$1,598

Index

Model No.	Page	List Price
TW60LAM	302	$1,864
TW7	313	$3,119
TW72	302	$1,814
TW72LAM	302	$2,109
TW8	313	$4,284
TWDA24	316	$157
TWDA30	316	$167
UL230M	230	$953
UL330M	230	$899
UL350H	230	$1,081
UL550HEZ	230	$1,210
ULEX	229	$1,208
ULGST	230	$727
ULMGR	229	$1,000
URS3	280	$75
URS4	280	$75
URS5	280	$75
URS6	280	$75
URS7	280	$75
URS8	280	$75
VB2	135,142	$749
VB5	135,142	$1,451
VBBF	134,141	$879
VBCZ	135,143	$2,914
VBQ2	135,142	$704
VBQ5	135,142	$1,369
VCC	180,240	$480
VCC1	180,240	$1,178
VCC2	180,240	$1,757
VCC3	180,240	$2,283
VCCL	180,240	$62
VCCM	180,240	$1,202
VCCMT	180,240	$1,444
VCF	134	$1,881
VCG	134	$1,884
VCL1	141	$1,045
VCL2	240	$1,671
VCL3	240	$2,177
VCLL	240	$62
VCW	141	$1,884
VFF	134,141	$853
VHC	134,141	$2,695
VLC	135,142	$1,819
VLCG	142	$1,819
VLCW	135,142	$1,819
VLF	133,141	$1,542
VSC10A	181,233	$1,248
VSC11A	181,233	$1,248
VSC12A	181,233	$1,248
VSC13	181,233	$671
VSC2A	181,233	$1,248
VSC3A	181,233	$1,248
VSC5A	181,233	$1,248
VSC7A	181,233	$1,248
VSC9	181,233	$671
VSCA	181,233	$1,248
VWRDL	134,141	$1,694
VWRDR	134,141	$1,694
WP4	164,179	$18
WS1224Z	257	$118
WS1236Z	257	$129
WS1242Z	257	$153
WS1248Z	257	$161

Model No.	Page	List Price
WS1530Z	257	$118
WS1536Z	257	$129
WS1542Z	257	$153
WS1548Z	257	$161
WS1830Z	257	$127
WS1836Z	257	$139
WS1842Z	257	$158
WS1848Z	257	$167
WS2430Z	257	$158
WS2436Z	257	$161
WS2442Z	257	$193
WS2448Z	257	$201
WS3030Z	257	$185
WS3036Z	257	$193
WS3042Z	257	$220
WS3048Z	257	$239
WS3636Z	257	$231
WS3642Z	257	$252
WS3648Z	257	$264
WSA219390	257	$94
WSA219391	257	$145
WSA219392	257	$158
WSA219393	257	$167
WSD1224Z	257	$145
WSD1236Z	257	$158
WSD1242Z	257	$171
WSD1248Z	257	$207
WSD1530Z	257	$203
WSD1536Z	257	$257
WSD1542Z	257	$268
WSD1548Z	257	$283
WSD1830Z	257	$213
WSD1836Z	257	$266
WSD1842Z	257	$274
WSD1848Z	257	$292
WSD2430Z	257	$235
WSD2436Z	257	$287
WSD2442Z	257	$297
WSD2448Z	257	$310
WSD3030Z	257	$255
WSD3036Z	257	$308
WSD3042Z	257	$320
WSD3048Z	257	$333
WSD3636Z	257	$373
WSD3642Z	257	$389
WSD3648Z	257	$401
X1886L	264	$146
X1886T	264	$199
X18DV5	265	$92
X18SR	265	$16
X18SRB	265	$7
X3686L	264	$259
X3686T	264	$319
X36SR	265	$16
X36SRB	265	$7

Model No.	Page	List Price