Advanced technology, proven performance and a guarantee to back it up.

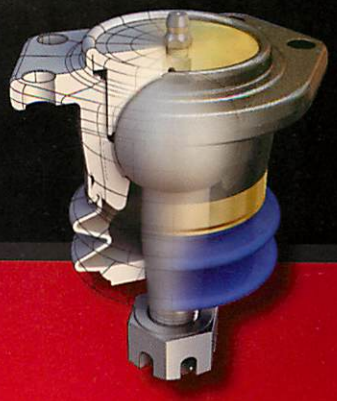

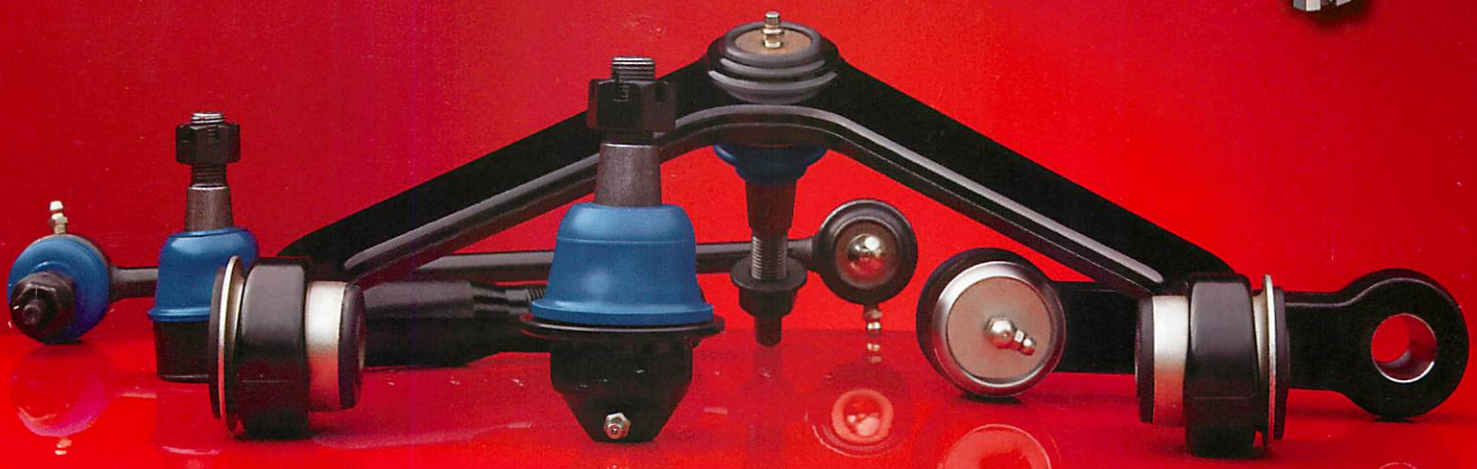

TECHNOLOGY MAKES THE DIFFERENCE

THE INDUSTRY'S BEST GUARANTEE PARTS & LABOR

Raybestos
The choice in chassis™

TIE ROD | BALL JOINT | IDLER ARM | SWAY BAR LINK | CONTROL ARM

WHERE TECHNOLOGY MAKES THE DIFFERENCE.

RAYBESTOS™ CHASSIS PRODUCTS USE ADVANCED TECHNOLOGY TO DELIVER PROVEN PERFORMANCE.

EACH PART IS ENGINEERED, PRECISION-MACHINED AND PERFORMANCE-TESTED TO MEET OR EXCEED THE FORM, FIT AND FUNCTION OF THE VEHICLE'S ORIGINAL MANUFACTURER SPECIFICATIONS. IN FACT, MANY OF OUR BALL JOINTS REPRESENT A SIGNIFICANT UPGRADE OVER OE SPECS.

THE RAYBESTOS CHASSIS LINE PROVIDES UNPARALLELED COVERAGE. WE OFFER PART NUMBERS FOR ALL DOMESTIC AND FOREIGN NAMEPLATES ON THE ROAD TODAY. SO WHEN YOU NEED THAT HARD-TO-FIND PART, WE'LL HAVE IT READY FOR YOU. RAYBESTOS CHASSIS PARTS ARE DESIGNED WITH ADVANCED TECHNOLOGY TO DELIVER PROVEN PERFORMANCE. GIVE US ONE SHOT AND FIND OUT FOR YOURSELF. INSTALL ONE TODAY.

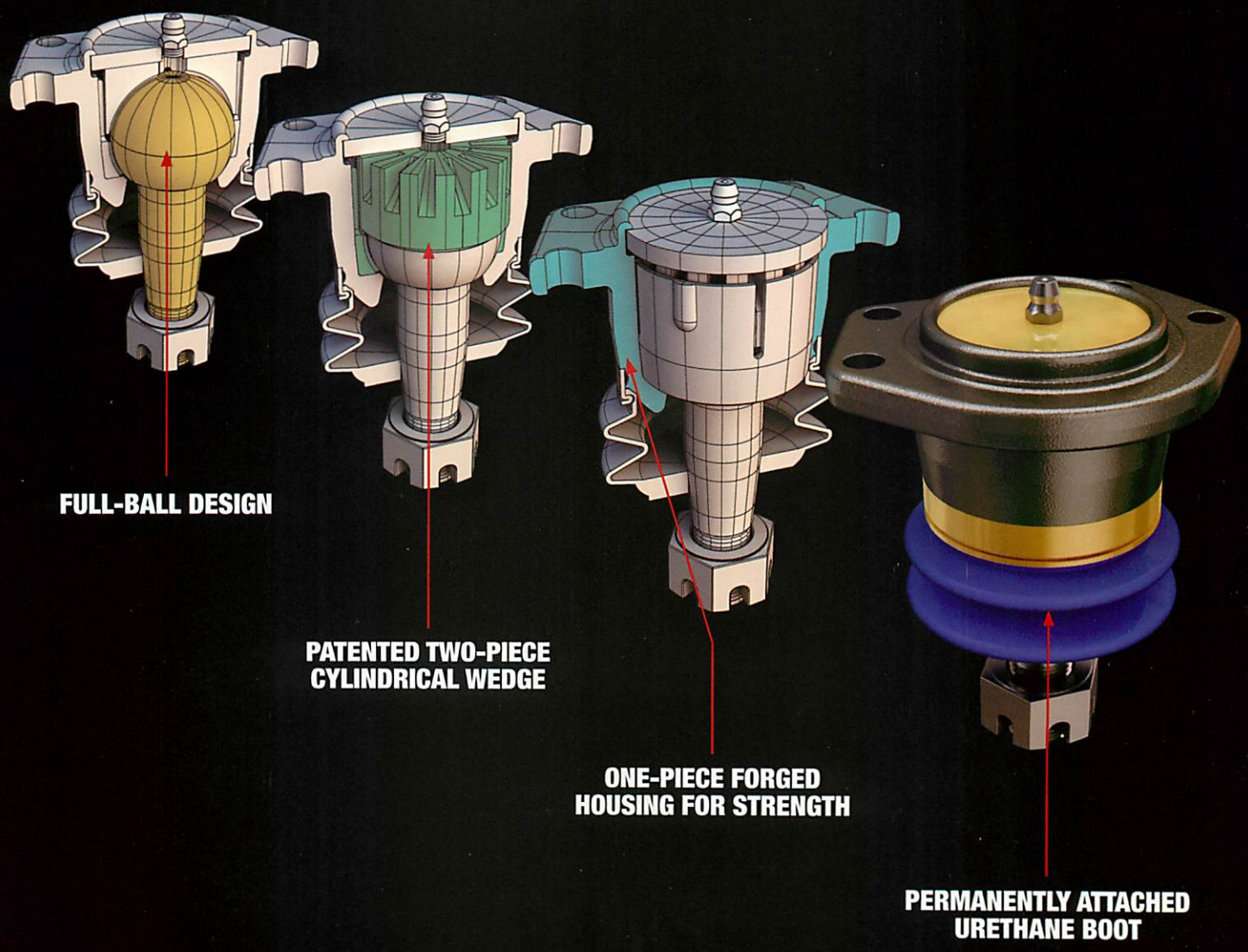

PROFESSIONAL GRADE®

ENGINEERED WITH ADVANCED TECHNOLOGY

TECHNOLOGY MAKES THE DIFFERENCE

Manufactured by the name you know and trust, these highly engineered advanced technology chassis parts feature:

- **Precision-machined to stringent tolerances**
- **Performance-tested, low-friction polymers**
- **Unique designs offer ease of installation, longer service life and reduction in endplay**
- **Exceptional coverage for foreign nameplate and domestic vehicles**
- **Meets fit, form and function of the OE manufacturer**
- **Safe and reliable performance**

NOTE: Specific design features may vary based on application

THE INDUSTRY'S BEST
Raybestos
GUARANTEE
PROFESSIONAL GRADE® CHASSIS
PARTS & LABOR

RAYBESTOS CHASSIS PROFESSIONAL GRADE PARTS AND LABOR GUARANTEE!

Our advanced technology, low-friction designs reduce endplay to hold tighter alignment tolerances, period. We are so confident in their performance that all Raybestos PG Chassis parts you install are backed by an exclusive parts and labor guarantee. Take no risks. Install Raybestos Chassis today.

NOTE: Restrictions may apply

See details at www.raybestoschassis.com

SERVICE GRADE®

The broad product lineup of Raybestos Chassis provides coverage for all domestic and foreign nameplate vehicles on the road today.

- **Meets fit, form and function of the OE manufacturer**
- **Safe and reliable performance delivered with ultimate cost-efficiency in mind**

BALL JOINT

- One-piece forged housing for strength
- Two-piece cylindrical wedge provides industry's finest fatigue/wear resistance
- No spring, no endplay
- Cold-formed, heat-treated stud for superior strength
- Full-ball design delivers ample wear surface
- Fused urethane boot prevents joint disintegration
- On premium pieces, no galvanic corrosion thanks to coated stud and hardware

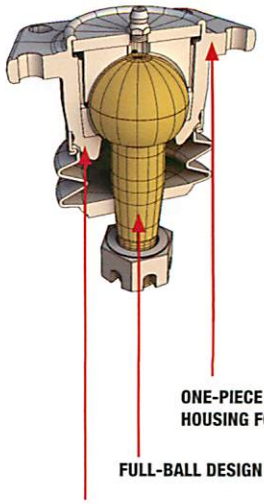

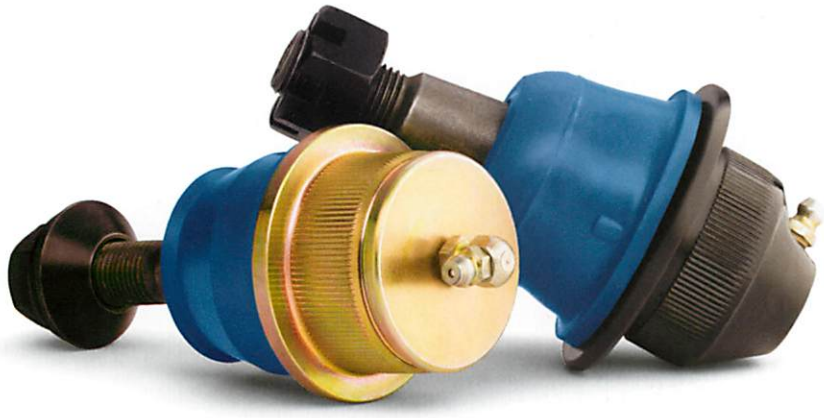

RAYBESTOS™ CHASSIS BALL JOINT FEATURE	RAYBESTOS CHASSIS BENEFIT	KEY COMPETITOR
High-technology, full-ball advanced design	Designed in accordance with the original vehicle's manufacturer specifications	Split-bearing design
Advanced synthetic bearing	Less wear, longer service life and smoother steering Eliminates metal-to-metal contact, reducing friction and fatigue	Not available
Fused polyurethane dust boot	Decreased chance of contamination	Standard dust boot fit

Raybestos™ products again conquer the competition with a selection of precision-machined long-lasting ball joints. Ball joints often bear the brunt of the load on utility vehicles, causing uneven or premature wear. This can throw the vehicle's alignment off, affecting steering and causing premature tire breakdown.

OTHER AREAS WHERE RAYBESTOS BALL JOINTS STAND UP AGAINST THE COMPETITION:

- Innovative synthetic bearing assembly with an increased bearing contact area that fully encapsulates the upper portion of the ball, allowing the joint to withstand additional weight associated with SUV's loads (lower load dissipation area on the competition's bearing design causes early wear)

- Tighter tolerances between the ball stud, the bearing and the housing reduce endplay that may shorten the ball joint's life cycle

Note: Specific design features may vary based on application

IDLER ARM

- Super-sized bearing for superior stability and zero side-to-side endplay
- Precision-machined stud and bracket bearing surface extends life and optimizes performance
- Low-friction bearing set for smooth steering
- Fused dust boot prevents joint disintegration

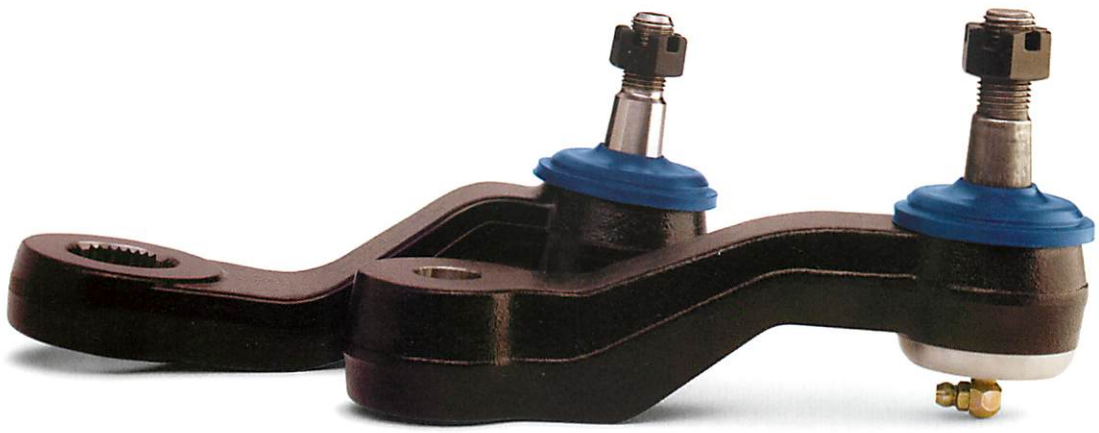

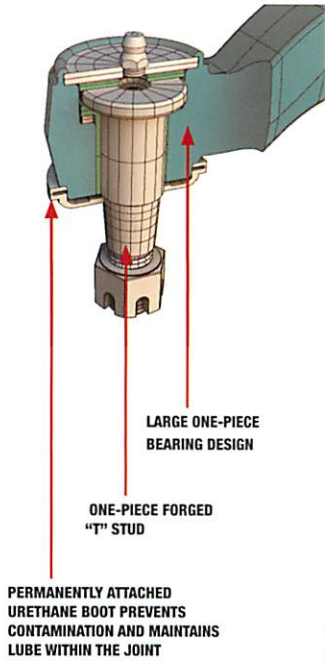

RAYBESTOS™ CHASSIS IDLER ARM FEATURE	RAYBESTOS CHASSIS BENEFIT	KEY COMPETITOR
Heavy-duty design of brackets, arms and bearing	Optimum strength and durability	Standard design
Large bearing area reduces friction	Service life extended by eliminating side-to-side endplay	Smaller bearing area
Forged arm	Stronger and more reliable	Cast arm
Heat-treated steel bracket	Superior strength and durability	Cast bracket
Fused polyurethane dust boot	Resists of cracking, splitting, dry-rotting and corrosion	Detachable dust boot

Variations in steering linkage geometry can lead to idler arm wear on problematic vehicles. When wear occurs, the toe setting can change radically when the suspension is put through its full range of motion.

Raybestos™ idler arms are engineered to meet or exceed the original vehicle manufacturer's parts specifications, and other competitive products in the marketplace. Our idler arms feature a larger bearing area for increased reliability and optimal performance.

WHY RAYBESTOS IDLER ARMS ARE THE BEST CHOICE FOR PROBLEMATIC APPLICATIONS:

- They are engineered to provide the most stable pivot point with the least amount of friction
- They have an inspection specification of no visible movement
- Stability of toe setting and parallelism of steering linkage delivers a longer life

Note: Specific design features may vary based on application

TIE ROD

- One-piece forged housing for strength
- Paired-bearing design yields low-friction, high-impact resistance
- Precision-machined stud delivers consistent torque for smooth operation
- Dyno tested for performance

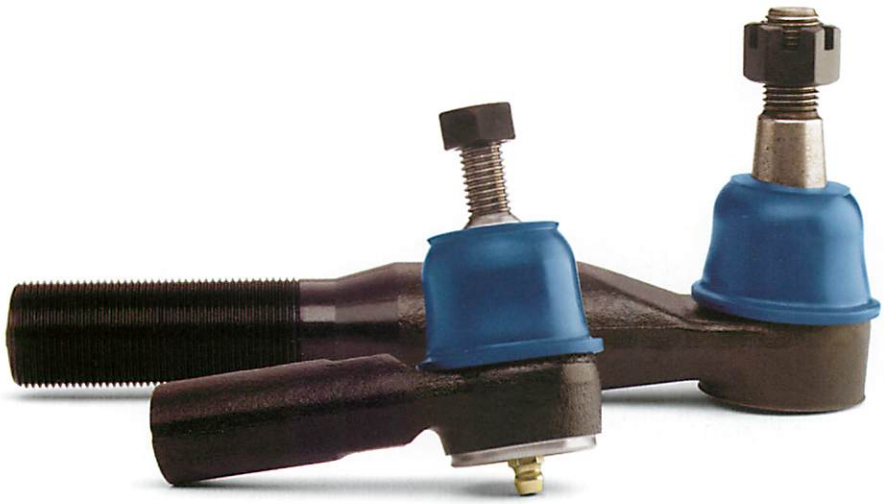

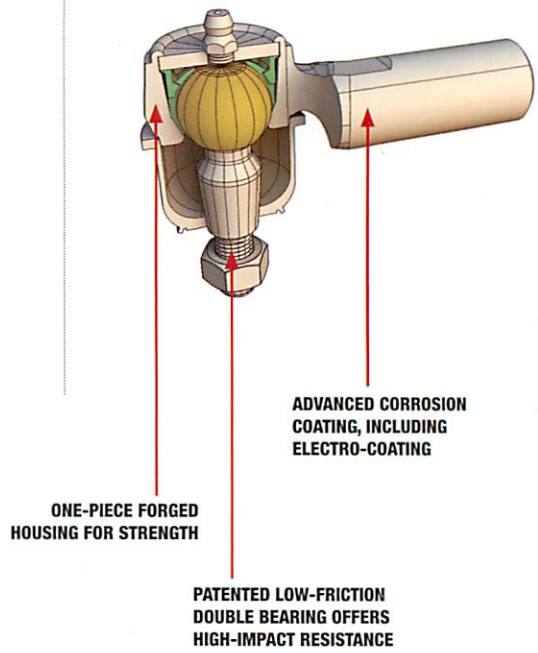

RAYBESTOS™ CHASSIS TIE ROD FEATURE	RAYBESTOS CHASSIS BENEFIT	KEY COMPETITOR
Large diameter ball and socket	Optimizes service life with reduced wear	Small-diameter ball and socket
Fused polyurethane dust boot	Resists cracking, splitting, dry-rotting and corrosion	Detachable dust boot

Raybestos™ products cruise past the competition with this superior tie rod that enhances performance. The competition lacks this exceptional durability. Raybestos tie rods pick up where the competition stops, using a larger diameter ball-and-socket design, and a permanently attached polyurethane dust boot that resists cracking, splitting and dry-rotting. These parts deliver quality and longevity.

RAYBESTOS TIE RODS TRIUMPH OVER THE COMPETITION WITH THESE FEATURES:

- A performance-tested, low-friction synthetic upper bearing that delivers smoother steering, better returnability and the elimination of endplay
- Precision-finished heat-treated ball ends that provide consistent torque and smooth operation throughout the entire range of travel

Note: Specific design features may vary based on application

SWAY BAR LINK

- Cold-forged rod for superior strength and stability
- Performance-enhancing low-friction design
- Full-ball stud maximizes performance surface area

RAYBESTOS™ CHASSIS SWAY BAR LINK FEATURE	RAYBESTOS CHASSIS BENEFIT	KEY COMPETITOR
Permanently attached polyurethane dust boot	Resists cracking, splitting, dry-rotting and corrosion	Slide-on boot
Low-friction design	Maximizes service life	Not available
Multiple wrench-flats	Designed for easy installation	Not available

Raybestos™ products do it again – its sway bar links blow away the competition with incomparable features such as a permanently attached polyurethane dust boot, greasable components and a low-friction design – all engineered to optimize service life and reliability.

IN ADDITION TO PASSENGER AND LIGHT DUTY VEHICLES, RAYBESTOS SWAY BAR LINKS ARE IDEAL FOR THESE SEVERE-DUTY AND FLEET APPLICATIONS:

- Police vehicles
- Taxis
- Emergency vehicles

Note: Specific design features may vary based on application

CONTROL ARM ASSEMBLIES

- One-two power-punch of ball joint/control arm combo conquers the competition for heavy-duty vehicles
- Less unsprung weight boosts part longevity
- Offers technicians a complete solution in this premium quality, professional-grade product

RAYBESTOS™ CHASSIS CONTROL ARM FEATURE	RAYBESTOS CHASSIS BENEFIT	KEY COMPETITOR
Lighter weight aluminum arm (where OE specified)	Less unsprung weight minimizes stress on other related components for longer life	Heavy steel arm
Advanced technology ball joint delivers superior performance and longer life	Delivers increased strength, reliability and durability	Not available

Raybestos™ Chassis product engineers have developed an advanced control arm assembly that packs top-notch performance. Inferior components on other control arms can't withstand the rigorous demands of heavy-duty vehicles such as work trucks. When OE components fail on these vehicles, use a Raybestos replacement to optimize part longevity and performance. These control arm assemblies are strong but lightweight – for less unsprung weight and fatigue – and feature an advanced technology ball joint.

RAYBESTOS CONTROL ARM ASSEMBLIES ARE THE SOLUTION TO THE PROBLEMS CHARACTERISTIC OF HEAVY-DUTY VEHICLES.

Note: Specific design features may vary based on application

ALIGNMENT PRODUCTS

Raybestos™ Chassis bushing kits and alignment products were precision-designed to optimize steering performance and to complete a proper four-wheel alignment – essential for safe vehicle operation.

The synthetic material used in Raybestos bushings are built to withstand high-force impacts and extreme weather conditions and won't crack, harden, become brittle or discolor with age.

The Raybestos line of alignment products includes adjustable ball joints, camber bushings, shims and adjusting sleeves and tools.

RAYBESTOS™ CHASSIS PROFESSIONAL GRADE® GUARANTEE

Raybestos Professional Grade Chassis Limited Warranty
Please carefully read the warranty and installation and operating instructions provided in the Raybestos® Chassis Master Catalog or online at www.raybestoschassis.com.

Raybestos Professional Grade products covered by this warranty
All Raybestos Chassis Professional Grade (hereafter "PG") Chassis parts are covered under this warranty, including, but not limited to: ball joints, idler arms, tie rods, sway bar links, control arm assemblies and alignment products.

Please note that this warranty DOES NOT apply to Raybestos Chassis Service Grade products.

What the warranty covers
All Raybestos PG Chassis parts you install are backed by an exclusive parts and labor guarantee for a period of up to 24 months from date of purchase, or 24,000 miles of service life, which ever occurs first. If the Raybestos PG Chassis product you have installed fails within this period, you may return the failed part to the Dealer/Jobber/WD for replacement or full refund of the part itself.

For recovery of the Labor Cost Reimbursement, the product must be installed by professional repair facility. The repair facility should return the failed part to the supplier, and prepare/process a formal Labor Cost claim to be submitted to Brake Parts Inc. ("BPI"). Detailed process follows below. Labor costs for replacement will be determined by the prevailing Mitchell International hourly labor rates in effect at the time your warranty claim occurs. Labor cost reimbursement will not exceed these rates. Once BPI has reviewed and approved the claim, BPI will issue Labor Cost Reimbursement credit to the Dealer/Jobber/WD for the claim, and the Dealer/Jobber/WD will then ultimately reimburse the repair facility.

BPI warrants all Raybestos PG Chassis products to be free from defects in materials and workmanship during the period of 24 months from date of purchase, or up to 24,000 miles of service life. This warranty is non-transferable. New car and equipment warranties remain in effect when Raybestos PG Chassis products are used. The Raybestos PG Chassis warranty does not cover any loss due to misuse, alteration, accident, abuse, neglect, or improper installation of the products. This warranty only applies to Raybestos PG Chassis products installed on passenger cars, vans and light trucks. It does not apply to products installed on vehicles or equipment used for the following: towing, racing, public service, security, government, off-highway recreational, off-highway competition, fleet or commercial purposes, or if used in any aircraft or aviation application. The warranty does not cover any loss or liability for incidental or consequential damages that may be caused by a breach of this written warranty. BPI EXPRESSLY DISCLAIMS, ALL OTHER WARRANTIES, EXPRESS OR IMPLIED, INCLUDING, WITHOUT LIMITATION, THE IMPLIED WARRANTIES OF MERCHANTIBILITY AND OF FITNESS FOR A PARTICULAR PURPOSE. The foregoing states Affinia's entire and exclusive liability and the buyer's exclusive and sole remedy for any damages or claim made in connection with the sale of Raybestos PG Chassis product. No other warranty, express or implied, shall exist.

Labor cost reimbursement guidelines
In order to obtain vehicle or equipment repairs under this warranty, the customer must, within 30 days after discovery of defect or failure, submit a claim to any Raybestos PG Chassis representative/distributor. The customer must also allow the Raybestos PG Chassis Warranty and Technical Service Department to examine the Raybestos PG Chassis product and, if required, the vehicle or equipment, to determine the extent of failure and whether it was caused by a defective Raybestos PG Chassis product. Products must be returned – in their original, unmodified condition – to the Raybestos PG Chassis Warranty and Technical Service Department for examination.

Raybestos PG Chassis will replace any PG product found not to conform to this warranty with a replacement provided that the customer follows this labor warranty filing procedure:
1. Complete claim form at store or distribution center. Be very specific about the incident and the reason for filing the claim. The more information provided, the easier it will be to correctly process the claim.
2. Submit all pertinent paperwork, including copies of the original purchase receipt, repair orders, pictures (if applicable) and any other paperwork relating to the failure.
3. Return all part(s) components and paperwork to the Warehouse Distributor
4. For questions, call (815) 363-9000 Ext. 3262

Raybestos PG Chassis reserves the right, at its sole discretion, to provide a monetary refund instead of a replacement. Raybestos PG Chassis also retains full discretion in determining whether any returned Raybestos PG Chassis product satisfies the condition of the warranty.

This warranty is exclusive of any other warranty, express or implied. RAYBESTOS PG CHASSIS EXPRESSLY DISCLAIMS, WITHOUT LIMITATION, THE IMPLIED WARRANTIES OF MERCHANTIBILITY AND OF FITNESS FOR A PARTICULAR PURPOSE. The foregoing states Raybestos PG Chassis' entire and exclusive liability and the buyer's exclusive and sole remedy for any damages or claim made in connection with the sale of a Raybestos PG Chassis product. Raybestos PG Chassis shall in no event be liable for any special, incidental or consequential damages whatsoever, except those specifically provided for in this warranty.

NO PERSON IS AUTHORIZED TO MODIFY THIS LIMITED WARRANTY IN ANY WAY.

The foregoing states the final, complete, and exclusive statement on warranty terms related to Raybestos PG Chassis products. Some states do not allow the exclusion or limitation of incidental or consequential damages, so the above limitations or exclusion may not apply to you. This warranty gives you specific legal rights and you may also have other rights which vary from state to state.

Affinia Under Vehicle Group
Manufacturer and Distributor of Raybestos PG Chassis
4400 Prime Parkway
McHenry, IL 60050
(815) 363-9000 Ext 3262

COMPLETE VEHICLE COVERAGE

Whether your customers are driving an early model or a domestic or foreign nameplate right from the showroom floor, Raybestos Chassis will have the parts you need when you need them.

The Best in Brakes® and the Choice in Chassis™ – that pretty much says it all.

⚠WARNING
All chassis products should be installed by a qualified technician only in accordance with the application(s) specified in our product catalog.

TECHNICAL SUPPORT

At any time during the workday, you have access to the industry's most highly trained and knowledgeable tech support specialists. Our ASE certified representatives are experts in choosing and utilizing the latest parts, tools and equipment. They can be reached by calling 900-733-8377 (rate $1.75 per minute). This service is free to our Raybestos® Safety Center members.

Make the best choice in chassis and visit www.raybestoschassis.com or call 800-323-0354 to set up an appointment with a Raybestos Chassis sales representative.

"Raybestos Chassis products have given JGR an edge in car setup, allowing us to fine tune the chassis to meet the requirements of our drivers who compete in some of the top levels of racing in the world. The superior performance and quality of the product has been demonstrated time and again for us."

Joe Gibbs, Joe Gibbs Racing

Raybestos™
The choice in chassis™

Affinia Global Brake & Chassis | 4400 Prime Parkway | McHenry, IL 60050 | 800-323-0354 | www.raybestoschassis.com

"Denny Hamlin®", "#11®" and "FedEx®" licensed under authority of Joe Gibbs Racing, Huntersville, NC.
"Kyle Busch®", "#18®", "Pedigree tm/®" and "M&M's tm/®" licensed under authority of Joe Gibbs Racing, Huntersville, NC.
"TOYOTA AND ALL ASSOCIATED MARKS, EMBLEMS AND DESIGNS ARE THE INTELLECTUAL PROPERTY OF TOYOTA MOTOR CORPORATION AND ARE USED WITH PERMISSION."

©2009 Affinia Group Inc.

Advanced technology, proven performance and a guarantee to back it up.
ONLY ONE CHASSIS LINE IS ADVANCED ENOUGH FOR JOE GIBBS RACING
Raybestos
The choice in chassis
PROFESSIONAL GRADE®
CHASSIS
TIE RODS / IDLER ARMS / BALL JOINTS / SWAY BAR LINKS / CONTROL ARMS
ENGINEERED WITH ADVANCED TECHNOLOGY
Our advanced technology, low-friction designs reduce endplay and hold tighter alignment tolerances, period. We are so confident in its performance that if any Professional Grade® Chassis product fails, we will refund the cost of the part – plus the labor. Take no risks. Install Raybestos™ Chassis today.
Visit RaybestosChassis.com or call 800-323-0354 for more information on Raybestos Chassis.
THE INDUSTRY'S BEST GUARANTEE PARTS & LABOR
THE OFFICIAL CHASSIS OF JOE GIBBS RACING
Raybestos
The choice in chassis™
See raybestoschassis.com for warranty details
4471RAYC